Flexible standard component system

The standard parts program for tool and fixture construction:

Basic elements, fixings, support and clamping elements, clamps, nuts, drilling jigs, drill bushes, magnets.
With the norelem-operating parts – grips, knobs, handwheels, clamp levers – a good selection of products is provided for the instrumentation, toolbuilding and mechanical engineering industries.



Group 01000
page 57–88



Group 02000
page 89–136



Group 03000
page 137–260

Systems and components for mechanical engineering and terotechnology

Pneumatic linear modules, rotary modules and grippers from the modular system, dovetail slides and guide rails are your pathways to automisation.

Shaft connections can be implemented easily with compensation and dog couplings, or conical clamping rings or ball and cardan joints.

Rod ends, angle and fork joints are connection modules for lever, lug and grub screws. Balancing of height differences of motors, gears and pillow block bearings can be performed quickly and easily with level balancing elements.

Shock absorbers and rubber/metal dampers are the ideal components for energy absorption, damping, vibration and sound insulation.



Group 20000
page 703–756



Group 21000
page 757–848



Group 23000
page 849–884

Measuring and Testing Components

The core of your quality assurance: concentricity test devices and dial gauges from norelem.

This puts the focus on quality: measuring tables, measuring stands, joints and standardised elements for inspection and checking devices.



Group 31000
page 1053–1062



Group 32500
page 1063–1074



Group 33000
page 1075–1112

TechnoShop norelem

The products must make work easier and more productive for the user, and must also meet the requirements placed on the products.

Therefore wheels, rollers, ball transfer units, workshops and warehouse organisation means, lubricants, adhesives technology and hammers from norelem.



Group 95000
page 1113–1140



Group 96000
page 1141–1152



Group 97000
page 1153–1166



Group 04000
page 261–360



Group 05000
page 361–398



Group 06000
page 399–572



Group 07000
page 573–664



Group 08000
page 665–688



Group 09000
page 689–702



Group 24000
page 885–904



Group 26000
page 905–920



Group 27000
page 921–986



Group 28000
page 987–1006



Group 29000
page 1007–1052

Flexible standard component system

nlm 01000



nlm 01020
p. 60, 61



Air-cushin Disk

nlm 01040
p. 62



Cast-iron Base
with T-slots

nlm 01060
p. 63

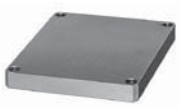

Steel Base Plates

nlm 01127
p. 64



Base Plates

nlm 01130
p. 64



Rectangular
precision steel plates

nlm 01140
p. 65



Plates
grey cast iron or aluminium

nlm 01148
p. 66, 67

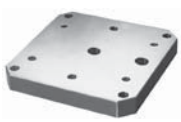

Pallets

nlm 01150
p. 68



Base Plates
grey cast iron

nlm 01160
p. 69



Rectangular Block
grey cast iron or aluminium

nlm 01180
p. 69



Cast-iron Hollowed Base
grey cast iron

nlm 01250
p. 70



Cast-iron Base
with or without T-slots

nlm 01252
p. 70



Aluminium
Angle Plates

nlm 01263
p. 72, 73



Single-sided Angle Plate

nlm 01265
p. 74, 75



Double Angle Plates

nlm 01267
p. 76



Double Angle Plates

nlm 01270
p. 77



Double Angle Plates
grey cast iron

nlm 01280
p. 78



Circular Plates
steel

nlm 01320
p. 78



Circular Plates
grey cast iron or aluminium

nlm 01380
p. 79



L-Shaped Profiles
grey cast iron or aluminium

nlm 01440
p. 80



Unequal L-Shaped Profiles
grey cast iron or aluminium

nlm 01520
p. 80

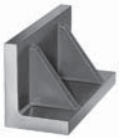

Cast-iron Ripped Unequal
L-Shaped Profiles

nlm 01560
p. 81

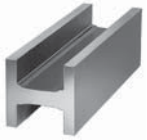

Rounded H-Shaped profile
grey cast iron or aluminium

nlm 01580
p. 81



T-Shaped Profiles
grey cast iron or aluminium

nlm 01640
p. 82



V-Shaped Profiles
grey cast iron or aluminium

nlm 01660
p. 82

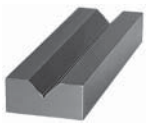

Wide V-Shaped Profiles
grey cast iron

nlm 01680
p. 83



U-Shaped Profiles
grey cast iron or aluminium

nlm 01740
p. 84

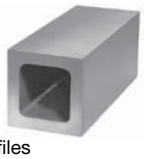

Square Hollow Profiles
grey cast iron

nlm 01760
p. 84

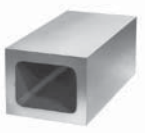

Rectangular Hollow Profiles
grey cast iron

nlm 01780, 01820
p. 85

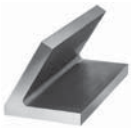

60° and 45°
Angle Profiles
grey cast iron

nlm 01850
p. 86, 87



Four Face Angle Plates

nlm 01852
p. 88



Four Face
Angle Plates
grey cast iron

new article

extended article

Flexible standard component system

nlm 02000



nlm 02000
p. 90, 91



Toggle Locators

nlm 02001
p. 92



Toggle Locators
with swivel angle 20°

nlm 02002
p. 93



Toggle Locators
with O-ring

nlm 02003
p. 94, 95



Toggle Locators
with O-ring and
exchangeable inserts

nlm 02004
p. 96



Toggle Locators
swivels back automatically

nlm 02005
p. 97



Adjustable Toggle Locators

nlm 02006
p. 98



Adjustable Toggle Locators
with O-ring

nlm 02007
p. 100, 101



Adjustable Toggle Locators
with O-ring and
exchangeable inserts

nlm 02008
p. 102



Adjustable Toggle Locators
with O-ring and hexagon socket

nlm 02009
p. 104, 105



Adjustable Toggle Locators
with O-ring, exchangeable inserts
and hexagon socket

nlm 02010
p. 106



Thrust Bolts

nlm 02020
p. 107



Straight and Thrust Bolts
to DIN 6321 (Edition 1973)

nlm 02028
p. 108



Thrust Bolts

nlm 02029
p. 109



Thrust Bolts
with positioning pin

nlm 02030
p. 110



Feet
with threaded pin to DIN 6320
(Edition 1971)

nlm 02035
p. 110



Tie-Rod Bolts

nlm 02037
p. 111



Support Bolts

nlm 02040
p. 112



Positioning Feet

nlm 02041
p. 113



Positioning Feet

nlm 02050
p. 114



Jig Feet
with threaded pin

nlm 02070
p. 115



Jig Feet
with internal thread

nlm 02080
p. 116



Toggle Locators
swivel 12°

nlm 02090
p. 117



Locating Feet

nlm 02110
p. 117



Swivel Pads

nlm 02130
p. 118



Thrust Pins

nlm 02150
p. 118



Adjustable Thrust Bolts
with counternut

nlm 02153
p. 119



Thrust Bolts

nlm 02155
p. 120



Jack Screws

nlm 02170
p. 121



Bolt Stops
with flat surface, in steel

nlm 02180
p. 121



Bolt Stops
with flat surface, in aluminium

nlm 02182
p. 122



Magnetic Bolt Stops
with flat surface, in aluminium

nlm 02190
p. 122



Atlas Bolt Blocks
with counter bolt

nlm 02210
p. 123



Convex insert,
centring plate,
vee-block inserts,
locating inserts, insert with
revolving ball

nlm 02240
p. 124



Compact Tensioning Blocks

✶ new article

■ extended article



nlm 02270
p. 125



Universal-Tensioning Bases

nlm 02310
p. 125



Set of Universal-Tensioning Bases

nlm 02320
p. 126



Height-adjustable Wedges

nlm 02330
p. 126



Cylindrical Support Elements

nlm 02333
p. 127



Adjustable supports

nlm 02334
p. 128



Work Supports

nlm 02335
p. 129



Work Support Cylinders

nlm 02340
p. 130



Spacing Element

nlm 02350
p. 131



Rectangular Support Elements

nlm 02360
p. 131



Spacing Elements

nlm 02380
p. 132



Compensating Spanner

nlm 02385
p. 133



Jack Screws

nlm 02387
p. 134



Inserts

nlm 02388
p. 135



Adjustable Jack Screws

nlm 02390
p. 136

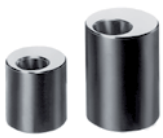

Eccentric Supports



nlm 03000, 03010
p. 138, 139



Spring Plungers
with recess and ball

nlm 03004, 03014
p. 140



Spring Plungers
with recess and ball

nlm 03020, 03025
p. 141



Spring Plungers
with recess and pressure pin

nlm 03020
p. 142



Spring Plungers
with end position feedback

nlm 03030, 03035
p. 144, 145



Spring Plungers
with hexagon socket and ball

nlm 03040
p. 146



Spring Plungers
with hexagon socket
and pressure pin, long version

nlm 03040, 03050
p. 148, 149



Spring Plungers
with hexagon socket and
pressure pin, steel

nlm 03055, 03058
p. 150, 151



Spring Plungers
with hexagon socket and
pressure pin, stainless steel

nlm 03001, 03011
p. 153



Spring Plungers
with recess and ball
LONG-LOK secured

nlm 03021, 03026
p. 154



Spring Plungers
with recess and pressure pin
LONG-LOK secured

nlm 03031, 03036
p. 155



Spring Plungers
with hexagon socket and ball
LONG-LOK secured

nlm 03041, 03051
p. 156, 157



Spring Plungers
with hexagon socket
and pressure pin, steel,
LONG-LOK secured

nlm 03056, 03059
p. 158, 159



Spring Plungers
with hexagon socket
and pressure pin, stainless steel,
LONG-LOK secured

nlm 03060
p. 160



Spring Plungers
with head

nlm 03069
p. 160



Locators

nlm 03070
p. 161



Spring Plungers
smooth surface in stainless steel

nlm 03071
p. 162



Spring Plungers
smooth surface in plastic

nlm 03072
p. 163



Spring Plungers
smooth surface,
without collar
in stainless steel

nlm 03073
p. 163



Spring Plungers
with head

nlm 03074
p. 164



Spring Plungers
smooth surface, double-sided

nlm 03080
p. 165



Eccentric Stops

nlm 03082
p. 165



Stops
adjustable

nlm 03083
p. 166



Stops
adjustable

nlm 03084
p. 166



Stops
adjustable

nlm 03085
p. 167



Mini-stops
adjustable

nlm 03086
p. 167



Spherical stops

nlm 03088
p. 168



5D-Swivelling Stop

nlm 03089
p. 170, 171



Locking Bolts

nlm 03089
p. 172, 173



Locking Bolts
with extended locking pin

nlm 03089
p. 174



Locking Bolts
short version

nlm 03089
p. 175



Locking Bolts
in Stainless Steel

nlm 03090
p. 176, 177



Locking Bolts

nlm 03091
p. 178



Locking Bolts

nlm 03092
p. 180, 181



Locking Bolts

new article

extended article



nlm 03092
p. 182, 183

Locking Bolts

nlm 03093
p. 184, 185

Locking Bolts
without collar

nlm 03093
p. 186, 187

Locking Bolts
without collar with
extended locking pin

nlm 03093
p. 189

Locking Bolts
in stainless steel,
without collar

nlm 03094
p. 190, 191

Locking Bolts
without collar

nlm 03096
p. 192, 193

Locking Bolts
without collar

nlm 03096
p. 194, 195

Locking Bolts
without collar

nlm 03097
p. 196, 197

Locking Bolts
without collar

nlm 03098
p. 198, 199

Locking Bolts
without collar

nlm 03098
p. 200

Locking Bolts
without collar

nlm 03099
p. 201

Locking Bolts
with grip

nlm 03099
p. 202

Locking Bolts
with grip in stainless steel

nlm 03099
p. 203

Bracing Parts

nlm 03099
p. 204

Locking Bolts
with grip

nlm 03099
p. 205

Locking Bolts
with grip in stainless steel

nlm 03102
p. 206

Locking bar

nlm 03105
p. 207

Straight Bolts, peelable
Models A and C

nlm 03106
p. 207

Straight Bolts, peelable
Models B and D

nlm 03107
p. 208

Straight Bolts
with ball end Form A

nlm 03107
p. 208

Straight Bolts
with flattened ball end Form C

nlm 03108
p. 209

Straight Bolts
with ball end Form B

nlm 03108
p. 209

Straight Bolts
with flattened ball end Form D

nlm 03110
p. 210

Centring Pins
for central hole

nlm 03112
p. 210

Centring Pins
for aligning hole

nlm 03114
p. 211

Centring Pins
for aligning hole

nlm 03120, 03130
p. 212

Cylindrical Positioning Pins

nlm 03140, 03150
p. 213

Free-Milled Positioning Pins

nlm 03151
p. 214

Locating Bolts spread type

nlm 03153
p. 216

Locating Cylinders

nlm 03154
p. 217

Centring Liner Bushings

nlm 03155
p. 218

Receiver Bushings
Model A (pressed in at rear)

nlm 03156
p. 218

Receiver Bushings
Model B (screwed in at front)

nlm 03157
p. 219

Clamping Plugs

nlm 03157
p. 220

Clamping Plugs
with lateral clamping

★ new article

■ extended article

nlm 03158 p. 221

Centring Tension Jack with and without protection

nlm 03158 p. 222

Centring Tension Jack with and without protection

nlm 03159 p. 223

Ball Tensioner with moving ball

nlm 03160 p. 224

Centring V

nlm 03165 p. 225

Centring clamps

nlm 03180 p. 226

Sliding V

nlm 03182 p. 227

Precision Locking Bolts with tapered support

nlm 03184 p. 227

Tapered Sleeves

nlm 03186 p. 228

Precision Locking Bolts with cylindrical support

nlm 03188 p. 228

Cylindrical Sleeves

nlm 03189 p. 230

Extendable Tensioning Pins hydraulic

nlm 03190 p. 231

Locking and Clamp Grips

nlm 03193 p. 232

Ball Locking Bolts self-locking

nlm 03194 p. 233

Ball Locking Bolts in stainless steel self-locking

nlm 03195 p. 234

Locking Pins

nlm 03196 p. 235

Ball Locking Bolts with T-grip self-locking

nlm 03196 p. 236

Ball Locking Bolts with L-grip self-locking

nlm 03199 p. 237

Safety Helix Cable

nlm 03199 p. 238

Restraining Cables with eye

nlm 03199 p. 238

Key Rings

nlm 03200 p. 239
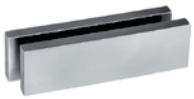
Pair of Parallel Blocks DIN 6346

nlm 03212 p. 241

Assortment of Parallel Blocks

nlm 03220 p. 241

Positioning Brackets

nlm 03240 p. 242
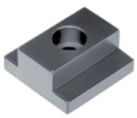
Tenon

nlm 03250 p. 242
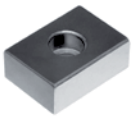
T-Slot Nuts

nlm 03252 p. 243

Elastic slot nuts Pat. Nr. 4200676

nlm 03260 p. 244

Free slot nuts DIN 6323

nlm 03270 p. 244

T-Slot Nuts with cylindrical fixture

nlm 03288 p. 245

Feather to DIN 6885 A

nlm 03289 p. 246

Curved washers DIN 6888

nlm 03290 p. 247

Driver nuts DIN 2079

nlm 03320 p. 248

Cylindrical Pins to DIN 6325

nlm 03325 p. 248

Tapped Cylindrical Pins to DIN 7979

nlm 03328 p. 249

Extractor

nlm 03330 p. 250, 251

Lateral Spring Plungers

nlm 03330 p. 252

Eccentric Bushes and assembly tools for lateral spring plungers

★ new article

■ extended article



nlm 03332
p. 253



Lateral Spring Plungers
without pressure pin

nlm 03334
p. 254, 255



Lateral Spring Plungers
with threaded sleeve

nlm 03336
p. 256



Lateral Spring Plungers
with threaded sleeve, without
pressure pin

nlm 03338
p. 257



Spring Traction Units
and Pressure Pads

nlm 03340
p. 258



Lateral Spring Plungers

nlm 03350
p. 259



Cylindrical Washer Elements



nlm 04010
p. 262
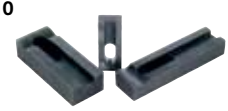
Adjustable Straps

nlm 04030
p. 263
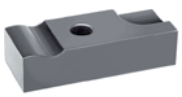
Pivoting Clamps

nlm 04050
p. 263

Adjustable Clamps

nlm 04070
p. 264

Stepped Clamps
steel or aluminium

nlm 04080
p. 265

Plain Clamps
DIN 6314, steel or aluminium

nlm 04081
p. 265
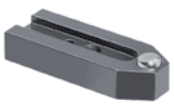
Straps
with flattened ball

nlm 04088
p. 266

Swan-neck Clamps Narrow
steel

nlm 04090
p. 267

Swan-neck Clamps Wide
to DIN 6316, steel or aluminium

nlm 04100
p. 268

Goose-Neck Straps
with long slot

nlm 04110
p. 269

Forked Clamps
to DIN 6315,
steel or aluminium

nlm 04130
p. 270

Stepped Clamps
forked with nose,
steel and aluminium

nlm 04140
p. 271

Swan-neck Clamps
continuously adjustable

nlm 04150
p. 272

Forked straps, cylindrical clamp
steel and aluminium DIN 6315 C

nlm 04170
p. 273

Cam Clamps

nlm 04185
p. 273

Mini Clamps

nlm 04190
p. 274
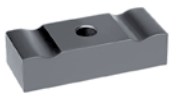
Double-Ended Clamps

nlm 04192
p. 274

Equipped Clamps
straight

nlm 04193
p. 275

Cropped, equipped clamps
with screws

nlm 04195
p. 275

Clamp Springs

nlm 04200
p. 276

Quick-Acting Clamps

nlm 04205
p. 277

Stepped Clamps
continuously adjustable

nlm 04210
p. 277

Hinged Clamps

nlm 04232
p. 278

Cam Levers
with internal and external
thread, steel or stainless steel

nlm 04232
p. 279

Cam Levers
in stainless steel with
internal and external thread

nlm 04233
p. 280

Adjustable Cam Levers
with external thread,
steel or stainless steel

nlm 04233
p. 281

Adjustable Cam Levers
in stainless steel
with external thread

nlm 04250
p. 282

Hinge Pins

nlm 04270
p. 282

Bolt Clamps

nlm 04290
p. 283

Single Cam Levers

nlm 04310
p. 283

Double Cam Levers

nlm 04330
p. 284

Single Cam Clamps

nlm 04350
p. 284

Double Cam Clamps

nlm 04360
p. 286

Helical excentric

nlm 04362
p. 287

Locking Disc

new article

extended article

Flexible standard component system

nlm 04000



nlm 04363
p. 288

Mini Swing Clamps
with cam lever ✶

nlm 04364
p. 289

Mini Swing Clamps ✶

nlm 04366
p. 290

Swing Clamps

nlm 04366
p. 291

Mounting Plates
for swing clamp

nlm 04370
p. 292

Hook Clamps

nlm 04371
p. 293

Hook Clamps
with collar

nlm 04372
p. 294

Ground Hook Clamps
Form A/B/C

nlm 04373
p. 295

Hook Clamps
with collar

nlm 04374
p. 296

Hook Clamps
with mounting bracket

nlm 04375
p. 297

Hook Holders

nlm 04378
p. 298

Joint Bars

nlm 04380
p. 299

Tenter Hook

nlm 04390
p. 299

Swing Latch Clamps

nlm 04395
p. 300

Clamping Bolt ✶

nlm 04400
p. 301

Clamping Pins

nlm 04400
p. 301

Clamping Pins (Heavy) ✶

nlm 04400
p. 302

Clamping Screws

nlm 04400
p. 302

Clamping Screws (Heavy) ✶

nlm 04400
p. 303

Mounting Plates
for pull clamp

nlm 04400
p. 303

Mounting Plates (Heavy)
for pull clamp ✶

nlm 04400
p. 304

Pull Clamps

nlm 04400
p. 305

Pull Clamps (Heavy) ✶

nlm 04410
p. 308, 309

“Actima“
Clamping Device

nlm 04420
p. 310

Floating Clamp

nlm 04421
p. 311

Floating Clamp
with separate clamp
and locking

nlm 04422
p. 312

Clamping Jaws
for floating clamps

nlm 04430
p. 314, 315

“Arness“
Clamping Device

nlm 04431
p. 316

Positive Clamping Eccentric

nlm 04432
p. 316
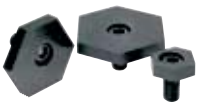
Unequal Hexagonal Cam Clamps

nlm 04433
p. 317

Spiral Edge
Clamping Screws

nlm 04434
p. 318

Knife Edge Cam Clamps

nlm 04435
p. 318

Low-profile
Equal Hex Cam Clamps

nlm 04436
p. 319

Low-profile T-slot
Cam Clamps

nlm 04437
p. 319

Edge Clamps
with support

✶ new article

extended article

norelem

nlm 04439
p. 321

Edge Clamps

nlm 04440
p. 322

Talon Grip ★

nlm 04440
p. 323

Round Talon Grip ★

nlm 04441
p. 324

Clamps

nlm 04444
p. 325

Adjustable Eccentric
Type Edge Clamps

nlm 04445
p. 326

Adjustable Stops

nlm 04450
p. 327
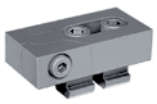
Edge Clamps

nlm 04470
p. 327

Pressing Clamps

nlm 04480
p. 328

Narrow Edge Clamps

nlm 04485
p. 329

Side Clamps
with thrust bolts

nlm 04500
p. 330

Reversible Jaw Edge Clamps

nlm 04509
p. 330

Narrow Edge Clamps

nlm 04512
p. 331

Adjustable Supports

nlm 04516
p. 332

Cam-operated
Edge Clamps adjustable

nlm 04518
p. 333

Cam-operated Edge Clamps

nlm 04520
p. 334

Cam-operated Edge Clamps

nlm 04521
p. 335

Sliding Edge Clamps

nlm 04522
p. 336

Double Edge Clamps

nlm 04523
p. 337

Double Edge Clamps
with machining allowance

nlm 04524
p. 338

Taper Clamps
clamping surface smooth
or serrated

nlm 04524
p. 339

Taper Clamps
with machining allowance

nlm 04525
p. 340

Taper Clamping Units
Form A

nlm 04526
p. 341

Taper Clamping Units
Form A+L with extra length for
made-to-order forms

nlm 04527
p. 342

Taper Clamping Units
Form B

nlm 04530
p. 345
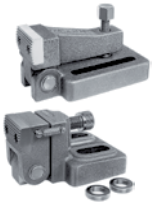
Narrow Edge
Clamps

nlm 04540
p. 346

Narrow Edge Brace

nlm 04562
p. 347

Side Clamps

nlm 04565
p. 348

Side Clamps

nlm 04570
p. 349

Toe Clamps

nlm 04570
p. 350

Toe Clamps

nlm 04575
p. 351

Side Clamps

nlm 04578
p. 352

Side Clamps

nlm 04610
p. 353

Mini Swivelling Retainer
with cam lever ★

nlm 04620
p. 354

Flange Clamp

nlm 04625
p. 355

Compact Tightener

nlm 04626
p. 356

Vertical Stands
with tension bolt

★ new article

■ extended article



nlm 04750
p. 357



Tightening Nuts

nlm 04751
p. 358



Tightening Nuts
with star or T-grip

nlm 04752
p. 359



Tightening Screws

Flexible standard component system

nlm 05000



nlm 05020
p. 363



Vertical, quick-acting clamps
with horizontal foot

nlm 05020
p. 364



Vertical, quick-acting clamps
with horizontal foot and full
clamping lever

nlm 05020
p. 365



Vertical, quick-acting clamps
with horizontal foot and full
clamping lever

nlm 05040
p. 366



Vertical, quick-acting clamps
with straight foot

nlm 05040
p. 367



Vertical, quick-acting clamps
with straight foot and full
clamping lever

nlm 05060
p. 368



Vertical, quick-acting clamps
with angled foot

nlm 05080
p. 369



Hook Clamps
with latch bracket

nlm 05120
p. 370



Horizontal, quick-acting clamps
with horizontal foot

nlm 05120
p. 370



Horizontal, quick-acting clamps
large model

nlm 05130
p. 371



Horizontal, quick-acting clamps
with straight foot

nlm 05140
p. 372



Mini-Clamps

nlm 05160
p. 372



Horizontal, quick-acting clamps
with slide rod

nlm 05170
p. 373



Quick-acting clamps with
push-rod for pressure and tension,
console

nlm 05200
p. 374



Plastic Grips

nlm 05220
p. 374



Spring-mounted pressure spindles

nlm 05240
p. 375



Pressure bolts
with thrust member

nlm 05241
p. 375



Pressure bolts
with thrust member

nlm 05260
p. 376



Neoprene pressure screws

nlm 05280
p. 376



Protective caps

nlm 05330
p. 377



Pneumatic clamps

nlm 05340
p. 378



Push-rod pneumatic clamps

nlm 05350
p. 379



Vertical pneumatic clamps
heavy model

nlm 05360
p. 380



Pneumatic Clamps, vertical
with vertical add-on cylinder

nlm 05400
p. 381



Vertical,
quick-acting clamps
heavy model

nlm 05420
p. 382



Quick-acting clamps,
heavy model
straight foot

nlm 05520
p. 383



Plastic Grips

nlm 05526
p. 384



Fasteners
with spring clip

nlm 05531
p. 385



Fasteners
with a pulling latch

nlm 05536
p. 386



Fasteners
with a pulling latch

nlm 05550
p. 387



Fasteners Adjustable
with a movable hook clamp

nlm 05552
p. 388



Fasteners Adjustable

nlm 05560
p. 389



Fasteners Adjustable
heavy-duty model

nlm 05600
p. 390



Clamping Vice

nlm 05610
p. 391



Swing Latch Clamps
pneumatic

★ new article

■ extended article



nlm 05620
p. 392



Clamping Arm
for swing clamp

nlm 05625
p. 392



Adapter
for swing clamps

nlm 05650
p. 394, 395



Mini clamps
Tünkers System

nlm 05660
p. 396



Swash Plates

nlm 05840
p. 397



Push-Pull Clamps
heavy-duty model
with handle

nlm 05882
p. 398



Rectangular Plastic Grips



nlm 06010
p. 400

Knurled Nuts
in steel and stainless steel
to DIN 6303

nlm 06013
p. 401

Plastic Knurled Nuts

nlm 06030
p. 401

Quick-Acting Knurled Nuts

nlm 06070
p. 402

Knurled Nuts

nlm 06090
p. 403

High Knurled
Thumb Screws
in steel and stainless steel
to DIN 464

nlm 06091
p. 403

Plastic Knurled Thumb Screws

nlm 06092
p. 404

Knurled Knobs

nlm 06100
p. 405

Graduated Knobs

nlm 06105
p. 406

Adjusting Knobs

nlm 06110
p. 407

High Knurled Nuts
in steel and stainless steel
to DIN 466

nlm 06120
p. 407

Thin Knurled Nuts
in steel and stainless steel
to DIN 467

nlm 06130
p. 408

Knurled Knops

nlm 06132
p. 408

Knurled Heads
for hexagon socket screw

nlm 06133
p. 409

Butterfly Heads
for hexagon socket screw

nlm 06134
p. 409

Disc Grips
for hex sockets screw

nlm 06140
p. 410

Thommy Bars
with fixed or movable spindel
to DIN 6305 or DIN 6307

nlm 06150
p. 411

Pad Screws
with fixed or movable spindel
to DIN 6304 or DIN 6306

nlm 06156
p. 413

Aluminium Palm Grips
similar to DIN 6335

nlm 06158
p. 414

Palm Grips
in stainless steel,
similar to DIN 6335

nlm 06160
p. 415

Grey Cast Iron Palm Grips
DIN 6335

nlm 06161
p. 416

Four Lobe Palm Grips
in grey cast iron
plastic coated conforms
to DIN 6335

nlm 06170
p. 416

Four Lobe Palm Grips
in grey cast iron
plastic pressure screw

nlm 06180
p. 417

Palm Grips
similar to DIN 6335

nlm 06190
p. 418

Quick-Fastening Grips
in grey cast iron

nlm 06192
p. 419

Aluminium Star Grips
similar to DIN 6336

nlm 06194
p. 420

Star Grips
in stainless steel,
similar to DIN 6336

nlm 06200
p. 421

Grey Cast Iron Star Grips
DIN 6336

nlm 06208
p. 422

Star Grips
similar to DIN 6336

nlm 06210
p. 424

Star Grips
with projecting steel bush

nlm 06212
p. 425

Star Grips
similar to DIN 6336,
steel parts in stainless steel

nlm 06220
p. 426, 427

Star Grips
similar to DIN 6336

nlm 06222
p. 428

Quick-Acting Star Grips

nlm 06230
p. 428

Four-Spoked Nuts

nlm 06235
p. 429
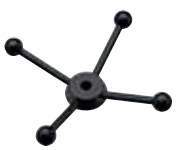
Capstan



nlm 06237
p. 430



Flat Knobs ★

nlm 06240
p. 431



Mushroom Knobs
in stainless steel ■

nlm 06241, 06242
p. 432



Mushroom Knobs

nlm 06245
p. 433



Grip Balls ■

nlm 06246
p. 434



Grip Balls
revolving

nlm 06247
p. 435



Ball Knobs
in thermoplastic
to DIN 319 extended ★

nlm 06247
p. 436



Ball Knobs
stainless steel or aluminium
DIN 319 ★

nlm 06250
p. 437



Ball Knobs
with smooth surface
to DIN 319 extended

nlm 06251
p. 438



Tapered Knops

nlm 06252
p. 438



Conical Knops

nlm 06253
p. 439



Clamp Grips

nlm 06262
p. 440



Handwheels without grip

nlm 06263
p. 441



Handwheels
with cylindrical revolving grip

nlm 06264
p. 442



Handwheels
with cylindrical fold-away grip

nlm 06265
p. 443



Handwheels
with cylindrical safety grip

nlm 06266, 06267
p. 444, 445



Knurled Wheels

nlm 06268
p. 446



Positioning Wheels

nlm 06271
p. 448, 449



Grey Cast Iron Handwheels
to DIN 950

nlm 06273
p. 450, 451



Aluminium Handwheels
to DIN 950

nlm 06275
p. 452, 453



Aluminium Disc Handwheels

nlm 06277
p. 454, 455



2-Spoke Aluminium Handwheels
with straight wheel rim

nlm 06279
p. 456



Aluminium Disc Handwheels
similar to DIN 950

nlm 06287
p. 457



Disc Handwheels
with revolving taper grip

nlm 06288
p. 458



Disc Handwheels
without taper grip

nlm 06290
p. 459



Fixed Handles
similar to DIN 39, in steel

nlm 06291, 06292
p. 459



Fixed Machine Handles
to DIN 39 Form E

nlm 06308, 06309
p. 460



Revolving Machine Handles
to DIN 98 Form E

nlm 06310
p. 460



Revolving Handles
similar to DIN 98, in steel

nlm 06311
p. 461



Fixed Handles in aluminium
similar to DIN 39

nlm 06312
p. 461



Revolving Handles in aluminium
similar to DIN 98

nlm 06313
p. 462



Rotating machine handle

nlm 06314
p. 462



Revolving Handles

nlm 06316
p. 463



Revolving Taper Grips

nlm 06316
p. 463



Revolving Taper Grips

★ new article ■ extended article

nlm 06320
p. 464

Taper Grips

nlm 06325, 06326
p. 465

Cylindrical Grips

nlm 06328
p. 466

Cylindrical Safety Grips
automatically returning

nlm 06330
p. 467

Tension Levers 20°
to DIN 99

nlm 06340
p. 468

Control Handles

nlm 06342
p. 469

Flat Control Handles

nlm 06349
p. 470

Locking Bars

nlm 06350
p. 471

Tension Levers

nlm 06353
p. 471

Revolving Handles short version

nlm 06355
p. 472

Screw-in Handles

nlm 06357
p. 473

Screw-in Handles
with adjustable torque

nlm 06360
p. 474

Handles

nlm 06362
p. 475

Clamp Hubs

nlm 06370
p. 476

Tension Levers
with internal thread

nlm 06371
p. 477

Tension Levers in stainless steel
with internal thread

nlm 06380
p. 478

Tension Levers
with external thread

nlm 06381
p. 479

Tension Levers in stainless steel
with external thread

nlm 06382
p. 480

Safety Tension Levers
with internal thread

nlm 06383
p. 481

Safety Tension Levers
with external thread

nlm 06390
p. 482

Flat Tension Levers
with internal thread

nlm 06400
p. 483

Flat Tension Levers
with external thread

nlm 06410
p. 484

Clamp Levers
with internal thread

nlm 06411
p. 485

Clamp Levers
with internal thread,
steel parts in stainless steel

nlm 06420
p. 486

Ball handles

nlm 06430
p. 486

Steel Clamp Levers

nlm 06430, 06431
p. 488, 489

Clamp Levers
with external thread,
steel or stainless steel

nlm 06440
p. 490

Steel Clamp Levers
with internal thread

nlm 06441
p. 491

Steel Clamp Levers
with external thread

nlm 06450
p. 492

Clamp Levers
with internal thread

nlm 06451
p. 493

Clamp Levers
with internal thread,
steel parts in stainless steel

nlm 06454
p. 494

Clamp Levers in stainless steel
with internal thread

nlm 06460, 06461
p. 496, 497

Clamp Levers
with external thread,
steel or stainless steel

nlm 06464
p. 498

Clamp Levers in stainless steel
with external thread

nlm 06470
p. 500, 501

Ratchet Levers

nlm 06480
p. 502

Offset Crank Handles
similar to DIN 468

nlm 06490
p. 503

Straight Crank Handles
similar to DIN 469

new article

extended article



nlm 06492
p. 504



Aluminium Crank Handles

nlm 06500
p. 505



Crank Handles
with cylindrical fold-away grip

nlm 06500
p. 506



Crank Handles
with cylindrical revolving grip

nlm 06502
p.507



Crank Handles
with cylindrical safety grip

nlm 06510
p. 508



Balanced Handles

nlm 06550
p. 508



Bar Knops

nlm 06600, 06601
p. 510, 511



Clamp Levers
with internal thread and plastic
handle, steel or stainless steel

nlm 06610, 06611
p. 512, 513



Clamp Levers
with external thread and plastic
handle, steel or stainless steel

nlm 06620
p. 514



Clamping Joints

nlm 06621
p. 515



Clamping Joints
individually adjustable

nlm 06622
p. 516



Multiple Connectors

nlm 06649
p. 517



T-Grips

nlm 06650
p. 518



T-Grips

nlm 06651
p. 519



Wing Grips in stainless steel

nlm 06652
p. 520



Wing Grips

nlm 06652
p. 521



Wing Grips
with continuous
internal thread

nlm 06652
p. 522



Miniwings

nlm 06652
p. 523



Miniwings
with continuous
internal thread

nlm 06655
p. 524



Wing Screws
with a counter grip

nlm 06702
p. 525



Triangular Star Grips
with high collar

nlm 06830
p. 526



Duroplastic Handwheels

nlm 06850
p. 527



Five Lobe Grips

nlm 06853
p. 528



Ripped Grips

nlm 06895
p. 529



Stirrup-Shaped Handles

nlm 06900
p. 529



Stirrup-Shaped Handles
in duroplastic

nlm 06900
p. 530



Stirrup-Shaped Handles

nlm 06901
p. 530



Stirrup-Shaped Handles
in duroplastic

nlm 06902
p. 531



Stirrup-Shaped Handles
in thermoplastic

nlm 06903
p. 532



Stirrup-Shaped Handles
in thermoplastic

nlm 06904
p. 533



Stirrup-Shaped Handles

nlm 06909
p. 534



Bridge Handle

nlm 06910
p. 534



Stirrup-Shaped Handles
in aluminium

nlm 06911
p. 535



Stirrup Handle

nlm 06912
p. 535



Slanting Stirrup-Shaped Handles

★ new article

■ extended article

nlm 06913
p. 536

Stirrup-Shaped Handles
with soft inner surface

nlm 06914
p. 537

Stirrup-Shaped Handles
in stainless steel

nlm 06915
p. 537

Stirrup-Shaped Handles
in aluminium

nlm 06916
p. 538

Stirrup-Shaped Handles
in thermoplastic

nlm 06917
p. 539

Stirrup-Shaped Handles round

nlm 06918
p. 540

Oval Bow Handles

nlm 06919
p. 540

Stirrup-Shaped Handles round

nlm 06920
p. 541

Oval Bow Handles

nlm 06921
p. 541

Flat Profile Bow Handles

nlm 06922
p. 542

Bow Handles
in stainless steel

nlm 06923
p. 542

Angled Machine Handles

nlm 06924
p. 543

Stirrup-Shaped Handles
in stainless steel

nlm 06925
p. 543

All-Purpose Machine Handles

nlm 06926
p. 544

Lightweight Handles

nlm 06927
p. 545

Tube Handles

nlm 06928
p. 546

Slanting Tube Handles

nlm 06929
p. 547

Apparatus Handles

nlm 06930
p. 548

Bow Handles
high-polish chromium-plated

nlm 06931
p. 549

Stirrup-Shaped Handles
in stainless steel

nlm 06932
p. 550

All-Purpose Apparatus Handles

nlm 06933
p. 551

All-Purpose Apparatus Handles

nlm 06934
p. 551

Measurement Device Handles

nlm 06935
p. 552

Angled Draw-Pull Handles

nlm 06936
p. 552

Bowed Tube Handles

nlm 06937
p. 553

Tube Handles

nlm 06938
p. 553

Tube Handles

nlm 06939
p. 554

Tube Handles

nlm 06940
p. 555

Tube Handles

nlm 06941
p. 556

Tube Handles

nlm 06942
p. 557

Tube Handles

nlm 06943
p. 558

Tube Handles

nlm 06944
p. 559

Machine Handles

nlm 06945
p. 559

Control Panel Handles

nlm 06946
p. 560

Machine Handles

nlm 06951
p. 561

Ledge Handles
in stainless steel

nlm 06952
p. 562

Angled Profile Handles

new article

extended article



nlm 06956
p. 563



Angled Leg Handles

nlm 06958
p. 564



Apparatus Handles

nlm 06959
p. 565



Plastic Handles

nlm 06960
p. 566



Tray Handles

nlm 06961
p. 567



Profile Folding Handles

nlm 06962
p. 568



Folding Tray Handles

nlm 06965
p. 569



Trough Grips

nlm 06970
p. 570



Fitting grip in stainless steel

nlm 06975
p. 571



Machine Handles

Flexible standard component system

nlm 07000



nlm 07020
p. 574

Studs

nlm 07030
p. 575

Rolled Thread Studs
DIN 6379

nlm 07040
p. 576

Rolled Thread T-Slot Bolts
DIN 787

nlm 07040
p. 577

Rolled Thread T-Slot Bolts
DIN 787

nlm 07060
p. 578
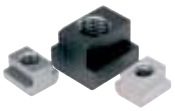
Nuts for T-slots
to DIN 508 extended

nlm 07061
p. 579

T-Nuts
long

nlm 07070
p. 579

Nuts for T-slots
blanks

nlm 07080
p. 580

Rhombic Nuts for T-slots

nlm 07100
p. 581

Ball Pressure Screws
with hexagon socket head

nlm 07101
p. 582

Ball Pressure Screws
with hexagon socket head
in stainless steel

nlm 07109
p. 583

Ball Pressure Screw
without head short model

nlm 07110, 07111
p. 584

Ball Pressure Screws
without head with full ball

nlm 07110, 07111
p. 585

Ball Pressure Screws without head
with flattened ball

nlm 07110
p. 586

Ball Pressure Screws
without head with flattened ball
and torsion protection

nlm 07110, 07111
p. 587

Ball Pressure Screws
without head

nlm 07112
p. 588

Baseplate metal carbide

nlm 07113
p. 589

Round Grippers and Inserts

nlm 07114
p. 590

Hexagonal Grippers

nlm 07115
p. 591

Square Grippers

nlm 07116
p. 591

Hard metal baseplates
square

nlm 07117
p. 592

Adjustable Grippers

nlm 07119
p. 593

Pressure Screws

nlm 07120
p. 594

Grub Screws
with thrust point to DIN 6332

nlm 07121
p. 594

Grub Screws
with ball thrust point

nlm 07125
p. 595

Torque Knurled Knobs

nlm 07130
p. 596

Torque bolts
with grub screws

nlm 07131
p. 596

Torque bolts
with slot coupling

nlm 07132
p. 597

Torque bolts
with support frame

nlm 07133
p. 597

Torque grips

nlm 07134
p. 598

Torque bolts
with ball grub screws

nlm 07138
p. 598

Thrust washer

nlm 07140
p. 599

Thrust Pads
to DIN 6311 extended

nlm 07141
p. 599

Thrust Pads
with pin fixing

nlm 07142
p. 600

Thrust Pads

new article

extended article



nlm 07143
p. 601

Pressure Spindles ★

nlm 07144
p. 602

Swivel Feet

nlm 07160
p. 603

Socket Head Screws
DIN 912 / DIN EN ISO 4762

nlm 07160
p. 603

Socket Head Screws
DIN 912 / DIN EN ISO 4762

nlm 07161
p. 604

Socket Head Screws
with low head
DIN 6912

nlm 07165
p. 605

Hexagon Socket Set Screws
with flat tip DIN 913

nlm 07166
p. 606

Hexagon Socket Set Screws
with pointed tip
DIN 914

nlm 07170
p. 606

Hexagon Head Bolts
with shank
DIN 931 /
DIN EN ISO 4014 /
DIN EN ISO 24014

nlm 07175
p. 607

Hexagon Socket
Countersunk Head Screws
DIN 7991

nlm 07180
p. 608

Eye Bolts
to DIN 444 Form B

nlm 07210
p. 609

Hexagon Nuts
DIN 934 /
DIN EN ISO 4032 /
DIN EN 24032

nlm 07212
p. 610

Hexagon Thin Nuts
DIN 439 ■

nlm 07220
p. 611

Extension Nuts
height 3 D

nlm 07240
p. 612

Hexagon Nuts with collar
height 1.5 D,
to DIN 6331 extended

nlm 07242
p. 613

Hexagonal Nut
with no-loss washer

nlm 07260
p. 614

Hexagon Nuts
height 1.5 D,
to DIN 6330 extended

nlm 07280
p. 615

Hexagon Domed Cap Nuts
similar to DIN 1587

nlm 07300
p. 615

Medium Washers
DIN 125, Form A

nlm 07310
p. 616

Self-limiting Bolt Locking Washers
DIN 25201

nlm 07320
p. 617

Heavy-Duty Washers
in steel or aluminium DIN 6340

nlm 07330
p. 618

Circlips for shafts
DIN 471 ★

nlm 07331
p. 619

Circlips for holes
DIN 472 ★

nlm 07360
p. 620

Spring Washers
DIN 2093

nlm 07375
p. 621

Washers ★

nlm 07380
p. 622

Projecting Washer for devices
to DIN 6372 extended

nlm 07420
p. 623

Concave and Convex Washers
DIN 6319, 10/01

nlm 07460
p. 624

Ball Head Position Adjuster

nlm 07520
p. 624

Captive C-Washers
DIN 6371

nlm 07523
p. 625
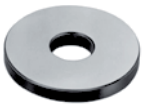
Spacing Washers

nlm 07530
p. 625

Shoulder Screws
with slotted flat head
DIN 923

nlm 07533
p. 626

Locating Bolts

nlm 07534
p. 626

Hexagon Socket
Head Shoulder Screws
similar to DIN ISO 7379

nlm 07535
p. 627

Hexagon Fits Bolts
with long thread
DIN 609

nlm 07540
p. 628

Shoulder Screws
with slotted domed head

★ new article ■ extended article

norelem

Flexible standard component system

nlm 07000

nlm 07560
p. 628

Hinged Fastener
DIN 6310

nlm 07570
p. 629

Quarter-Turn Screws

nlm 07590
p. 629

Slotted Round Nuts
DIN 1804

nlm 07595
p. 630

Slot Nuts with elastic stop ring

nlm 07598
p. 632

Adjusting Nuts

nlm 07620
p. 633

Fork Pieces
with threaded bolt

nlm 07630
p. 634

Grub screws
DIN 551

nlm 07640
p. 634

Grub screws
in steel and stainless steel
to DIN 976-1

nlm 07650
p. 635

Springs

nlm 07645
p. 636

HeliCoil® plus
Threaded Inserts

nlm 07660
p. 637

Threaded Inserts

nlm 07661
p. 638

Reinforced Threaded Inserts

nlm 07662
p. 639

Solid Body Threaded Inserts

nlm 07663
p. 640

Threaded Inserts
with internal thread, self-locking

nlm 07664
p. 641

Reinforced Threaded Inserts
with internal thread, self-locking

nlm 07666
p. 642

Repair Kit

nlm 07670
p. 644

Grub Screws
with screw-in stop for gluing

nlm 07680
p. 646

Lifting Eye Bolts male
similar to DIN 580

nlm 07690
p. 646

Lifting Eye Bolts female
similar to DIN 582

nlm 07695
p. 647

Revolving Lifting
Eye Bolts
male, high-strength

nlm 07710
p. 648

Revolving
Attachment-Swivel 360°
quality class 8

nlm 07720
p. 649

Weldable
Attachment-Points

nlm 07730
p. 650

Lifting Eye Bolts

nlm 07735
p. 651

Lifting Eye Bolts
with Envirolox®-
protective finish

nlm 07750
p. 651

Side Pull Rings

nlm 07752
p. 652

Side Swivel

nlm 07770
p. 653

Swivel Eye Bolts

nlm 07772
p. 654

Pivoting Lift Rings

nlm 07774
p. 655

Forged Center Pulls

nlm 07775
p. 656

Side Swivel

nlm 07780
p. 657

Lifting Pins
self-locking

nlm 07782
p. 658

Lifting Pins
in stainless steel
self-locking

nlm 07784
p. 659

Receiver Bushings
in stainless steel
for lifting pin

nlm 07800
p. 660, 661

Adjusting Rings
to DIN 705
in steel and stainless steel

nlm 07810
p. 662

Slotted Clamping Ring

nlm 07812
p. 663

Split Clamping Ring

★ new article

■ extended article



nlm 08000
p. 666

Drilling Plates

nlm 08050
p. 666

Bearing Blocks, long

nlm 08100
p. 667

Bearing Blocks, short

nlm 08150
p. 667

Closing Parts

nlm 02010
p. 668

Thrust Bolts

nlm 08180
p. 668

Thrust Washers

nlm 08250, 08260
p. 669

Drilling Jig Elements
with short and long bearing block

nlm 08270, 08280
p. 669

Drilling Plates
with short and long bearing block

nlm 08300
p. 670

Handle
for drilling jigs

nlm 08550
p. 674, 675

Drilling Jigs size 0 to 3 S
DIN 6348 extended

nlm 08550
p. 676, 677

Drilling Jigs size 3 to 6
DIN 6348

nlm 08570
p. 678

Drilling Plates
DIN 6348 extended

nlm 08580
p. 679

Base Plates
DIN 6348

nlm 08600, 08610
p. 679

Lengthening Column

nlm 08630
p. 680
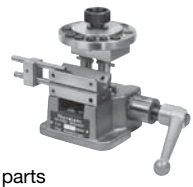
Drilling Jigs
for cylindrical parts

nlm 08640
p. 681

Index drilling discs
for drilling jig for cylindrical parts

nlm 08641
p. 681

Locating plates
for drilling jig for cylindrical parts

nlm 08650
p. 682

Drill bush support plates
for drilling jig for cylindrical parts

nlm 08710
p. 683

V-blocks
with stop

nlm 08900
p. 684

Cylindrical Drill Bushes
DIN 179

nlm 08910
p. 685

Drill Bushes with collar
DIN 172

nlm 08920
p. 686

Removable Drill Bushes
DIN 173

nlm 08920
p. 687

Removable Drill Bushes
DIN 173, part 1

nlm 08926
p. 688

Clamping bushes
DIN 173, part 1

nlm 08927
p. 688

Shoulder Screws
with slotted flat head
for removable drill bushes DIN 173

★ new article

■ extended article



nlm 09060
p. 690



Permanent Magnetic Clamps with fine and finest pole division

nlm 09060
p. 692



Round Holding Magnets (Round bar gripper) in Oerstit

nlm 09061
p. 692



Round Holding Magnets (Round bar gripper) in Oerstit

nlm 09063
p. 693



Round Holding Magnets with pin (Round bar gripper) in Oerstite

nlm 09064
p. 693



Flat Holding Magnets (Flat gripper) in Oxit

nlm 09065
p. 694



Flat Holding Magnets with thread (Flat gripper) in Oxit

nlm 09066
p. 694



Flat Gripper in Secolit (Samarium Cobalt)

nlm 09067
p. 695



Round Bar Gripper in Secolit (Samarium Cobalt)

nlm 09068
p. 695



Round Holding Magnets with internal thread (Round bar gripper)

nlm 09069
p. 696



Flat Gripper in Neodymium

nlm 09070
p. 697



Flat Gripper with through hole in Oxit

nlm 09071
p. 697



Flat Gripper with counterbore in Oxit

nlm 09072
p. 698



Flat Gripper with internal thread in Neodymium

nlm 09094
p. 698



Pot Magnets

nlm 09096
p. 699



Flat Pot Magnets

nlm 09098
p. 699



Button Magnets

nlm 09100
p. 700



U-shaped Strong Magnets

nlm 09150
p. 700



U-shaped Strong Magnets

nlm 09210
p. 701



Permanent Magnetic Feet

Systems and components for mechanical engineering and terotechnology

nlm 20000



nlm 20000
p. 708, 709

Linear Modules pneumatic
with two circular channels

nlm 20000
p. 710, 711

Linear Modules pneumatic
with three circular channels

nlm 20010
p. 712

Set Screws

nlm 20030
p. 714, 715

Linear Modules pneumatic
with aligning guide

nlm 20032
p. 716, 717

Linear Modules pneumatic
with aligning guide

nlm 20034
p. 718, 719

Linear Modules pneumatic
with aligning guide

nlm 20036
p. 720, 721

Linear Modules pneumatic
with aligning guide

nlm 20050
p. 724, 725

Lifting Units, pneumatic
with aligning guide

nlm 20054
p. 726, 727

Lifting Units, pneumatic
with circular channels

nlm 20056
p. 728, 729

Lifting Units, pneumatic
with circular channels

nlm 20060
p. 731

Rotary Module, pneumatic

nlm 20060
p. 732

Rotary Module, pneumatic

nlm 20062
p. 733

Rotary Module, pneumatic

nlm 20062
p. 734

Rotary Module, pneumatic
Heavy duty version

nlm 20064
p. 735

Rotary Module, pneumatic

nlm 20064
p. 736

Rotary Module, pneumatic
Heavy duty version

nlm 20080
p.737
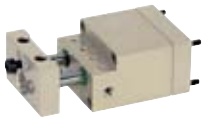
Inclined Position
for Rotary Module 20060-024

nlm 20082
p. 738
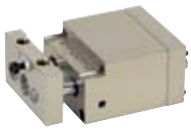
Inclined Position
for Rotary Module 20062-016

nlm 20082
p. 739

Inclined Position
for Rotary Module 20062-026

nlm 20084
p. 740

Inclined Position
for Rotary Module 20064-019

nlm 20084
p. 741

Inclined Position
for Rotary Module 20064-029

nlm 20100
p. 744, 745

Grip Module
Parallel Grippers

nlm 20200
p. 748, 749

Portal Modules, pneumatic
with aligning guide

nlm 20200
p. 750

Portal Modules, pneumatic
with circular channels

nlm 20240
p. 751

Centring Rings

nlm 20900
p. 752

Inductive Proximity Switches
Housing shape, round

nlm 20905
p. 753

Inductive Proximity Switches
Housing shape, rectangular

nlm 20910
p. 754

Inductive Proximity Switches
Housing shape with thread

nlm 20950
p. 755

Plug Connector
with screw fitting

nlm 20955
p. 756

Plug Connector
convertible with screw fitting

★ new article

■ extended article

norelem

Systems and components for mechanical engineering and terotechnology

nlm 21000



nlm 21000
p. 758
Dovetail Slides with spindel and knurled micrometer knob

nlm 21000
p. 759
Straps

nlm 21030
p. 760
Dovetail Slides

nlm 21031
p. 761
Dovetail Slides with end plates

nlm 21032
p. 762
Dovetail Slides with spindel and knurled micrometer knob

nlm 21033
p. 763
Dovetail Slides with spindel and knurled micrometer knob and handweel

nlm 21034
p. 764
Precision Roller Sliders

nlm 21035
p. 765
Miniature Roller Sliders

nlm 21038
p. 766
Precision Roller Sliders with end plates

nlm 21040
p. 767
Precision Roller Sliders with spindel and knurled micrometer knob

nlm 21050
p. 768
Cross Roller Guide Rails

nlm 21052
p. 769
Roller Cages

nlm 21100
p. 770
Short Positioning Tables

nlm 21102
p. 771
Short Positioning Tables with position indicator

nlm 21120
p. 772
Long Positioning Tables

nlm 21122
p. 773
Long Positioning Tables with position indicator

nlm 21140
p. 774
Lift Tables

nlm 21150
p. 775
Turning Devices

nlm 21160
p. 776
Circular Positioning Tables

nlm 21162
p. 777
Swivel Angle

nlm 21170
p. 778
Swiveling Tables inclination 30°

nlm 21180
p. 779
Base Plates

nlm 21190
p. 779
Angle Plates

nlm 21200
p. 783
Carriages DryLin® T

nlm 21200
p. 784
Guide Rails DryLin® T

nlm 21210
p. 785
Miniature Linear Guide System DryLin® T

nlm 21230
p. 786
Low Profile Linear Guide systems DryLin® N

nlm 21230
p. 787
Low Profile Linear Guide systems DryLin® N

nlm 21230
p. 788
Low Profile Linear Guide systems DryLin® N

nlm 21230
p. 789
Low Profile Linear Guide DryLin® N

nlm 21240
p. 790
Carriages DryLin® W

nlm 21240
p. 791
Sliding Carriages DryLin® W

nlm 21240
p. 792
Guide Rails DryLin® W single

nlm 21240
p. 793
Guide Rails DryLin® W double

★ new article

■ extended article

Systems and components for mechanical engineering and terotechnology

nlm 21000



nlm 21320
p. 794

Roller Carriage compact and heavy-duty model ✶

nlm 21320
p. 795

Roller Guide Rails ✶

nlm 21322
p. 796

Roller Carriage in steel ✶

nlm 21322
p. 797

Roller Carriage in aluminium ✶

nlm 21322
p. 798

Roller Guide Rails ✶

nlm 21340
p. 799

Telescoping Rails ✶

nlm 21342
p. 800

Telescoping Rails S-shape ✶

nlm 21400
p. 802

Carriages

nlm 21402
p. 803

Carriages with flange

nlm 21404
p. 804

Compact Carriages

nlm 21406
p. 805

Compact Carriages short

nlm 21410
p. 806

Profile Guide Rails

nlm 21420
p. 807

Miniature Carriage in stainless steel ✶

nlm 21425
p. 808

Miniature Profile Guide Rails in stainless steel ✶

nlm 21500
p. 809

Linear Ball Bearings with plastic cage

nlm 21505
p. 810

Linear Ball Bearings with steel cage

nlm 21510
p. 811

Linear Ball Bearings with angle error adjustment

nlm 21515
p. 812

Linear Ball Bearings with angle error adjustment, high basic load rating

nlm 21518
p. 813

Linear Ball Bearings with flange

nlm 21520
p. 814

Linear Ball Bearings with flange, double bearing

nlm 21522
p. 815

Linear Housing Units with flange

nlm 21524
p. 816

Linear Housing Units with flange, Tandem

nlm 21530
p. 817

Linear Housing Units individual, closed

nlm 21535
p. 818

Linear Housing Units individual, open

nlm 21540
p. 819

Linear Housing Units Tandem, closed

nlm 21545
p. 820

Linear Housing Units Tandem, open

nlm 21550
p. 821

Linear Housing Units Quadro, closed

nlm 21555
p.822

Linear Housing Units Quadro, open

nlm 21560
p. 823

Attachment Seals Double-lip Sealing Rings

nlm 21565
p. 824

Shaft Supports

nlm 21575
p. 825

Traverses fixed

nlm 21577
p. 826

Traverses moveable

nlm 21580
p. 827

Shaft Bents

nlm 21582
p. 828

Shaft Bents Standard

✶ new article ■ extended article

norelem

Systems and components for mechanical engineering and terotechnology

nlm 21585
p. 829



Flange Shaft Bents

nlm 21590
p. 830



Precision Guide Shafts
with installation drill holes

nlm 21595
p. 831



Precision Guide Shafts

nlm 21880
p. 832



Scales in stainless steel
self-adhesive

nlm 21882
p. 833



Scales in aluminium
self adhesive or with boreholes

nlm 21884
p. 834



Scales in aluminium
self adhesive or with boreholes

nlm 21901
p. 835



Digital Position Indicators

nlm 21902
p. 836



Digital Position Indicators

nlm 21904
p. 837



Digital Position Indicators

nlm 21922
p. 838



Position Indicator
freely programmable

nlm 21940
p. 840



Reducing Bushes

nlm 21942
p. 841



Insert Plates

nlm 21944
p. 842



Mounting Plates

nlm 21950
p. 843



Adjusting Knobs
with position indicator
analogue display

nlm 21952
p. 844



Adjusting Knobs
with position indicator
digital display

nlm 21960
p. 845



Position Indicators
for handwheels
analogue display

nlm 21962
p. 846



Position Indicators
for handwheels
analogue and digital display

nlm 21970
p. 847



Handwheels for
position indicators

nlm 21972
p. 848



Handwheels for
position indicators

new article

extended article

Systems and components for mechanical engineering and terotechnology

nlm 23000



nlm 23000 p. 851
Metal Bellows Couplings with radial clamping hub

nlm 23002 p. 852
Metal Bellows Couplings clamping with grub screw

nlm 23010 p. 853
Spring Bar Coupling Devices with radial clamping hub, aluminium

nlm 23010 p. 854
Spring Bar Coupling Devices with radial clamping hub, stainless steel

nlm 23012 p. 855
Spring Bar Coupling Devices with detachable clamp hubs, aluminium

nlm 23012 p. 856
Spring Bar Coupling Devices with detachable clamp hubs, aluminium

nlm 23021 p. 857
Elastomer Dog Couplings with conical hub and clamping ring (similar to DIN 69002)

nlm 23022 p. 858
Elastomer Dog Couplings with radial clamping hub

nlm 23023 p. 859
Elastomer Dog Couplings clamping with grub screw

nlm 23025 p. 860
Elastomer Dog Couplings with radial clamping hub and intermediate tube

nlm 23030 p. 861
Oldham-Type Couplings with radial clamping hub

nlm 23032 p. 862
Oldham-Type Couplings clamping with grub screw

nlm 23050 p. 863
Slotted Rigid Couplings

nlm 23052 p. 864
Divided Rigid Couplings

nlm 23350 p. 865
Conical Clamping Rings Form A

nlm 23351 p. 866
Conical Clamping Rings Form B

nlm 23352 p. 867
Conical Clamping Rings Form C

nlm 23354 p. 868
Conical Clamping Rings Form D

nlm 23370 p. 870
Shaft-Hub Clamping Sets stainless steel

nlm 23403, 23404 p. 873
Cardan Joints with slide bearing DIN 808

nlm 23406, 23407 p. 874
Cardan Joints with needle bearing DIN 808

nlm 23409, 23410 p. 875
Cardan Joints with slide bearing version coarse DIN 808

nlm 23412 p. 876
Telescopic Cardan Shafts

nlm 23414 p. 877
Protective Rubber Covers for ball-and-socket joints or cardan joints (single)

nlm 23415 p. 877
Protective Rubber Covers for ball-and-socket joints or cardan joints (double)

nlm 23450 p. 878
Quick Plug Couplings with radial offset compensation

nlm 23452 p. 879
Quick Plug Couplings with radial offset compensation and screw-on flange

nlm 23454 p. 880
Quick Plug Couplings with angular and radial offset compensation

nlm 23500 p. 881
igubal® Pillow Block Bearings

nlm 23710 p. 882, 883
Plastic Slide Bearings

nlm 23715 p. 884
Thrust Washers

★ new article ■ extended article

norelem

Systems and components for mechanical engineering and terotechnology



nlm 24000
p. 886



ACME Threaded Spindles, rolled
right-hand thread, single-flight

nlm 24003
p. 887



ACME Threaded Nuts, round
right-hand thread, single-flight

nlm 24005
p. 888



ACME Threaded Nuts
with flange
right-hand thread, single-flight

nlm 24055
p. 890



Ball-type Linear Drives, rolled
with flange nut DIN 69051 Part 5

nlm 24060
p. 891



Ball-type Linear Drives, rolled
with screw-in cylinder nut

nlm 24070
p. 892



Housings
for flange nuts

nlm 24072
p. 893



Solid Bearing Units

nlm 24074
p. 894



Loose Bearing Units

nlm 24076
p. 895



Solid Bearing Units
in block design

nlm 24078
p. 896



Loose Bearing Units
in block design

nlm 24080
p. 897



Solid Bearing Units
in flange design

nlm 24082
p. 898



Loose Bearing Units
in flange design

nlm 24100
p. 900, 901



Miniature Ball-type
Linear Drives, ground
with flange nut

nlm 24105
p. 902, 903



Miniature Ball-type
Linear Drives, ground
with screw-in cylinder nut

new article

extended article

Systems and components for mechanical engineering and terotechnology



nlm 26100
p. 907

Rubber-metal Buffers
Type A

nlm 26101
p. 908

Rubber-metal Buffers
Type AT tapered

nlm 26102
p. 909

Rubber-metal Buffers
Type B

nlm 26104
p. 910

Rubber-metal Buffers
Type C

nlm 26105
p. 911

Rubber-metal Buffers
Type CT tapered

nlm 26106
p. 912

Rubber-metal Buffers
Type D

nlm 26107
p. 913

Rubber-metal Buffers
Type DS suction base

nlm 26108
p. 913

Rubber Impact Buffers
Type TP door buffer

nlm 26110
p. 914

Rubber Impact Buffers
parabolic

nlm 26112
p. 915

Rubber Impact Buffers
tapered

nlm 26115
p. 915

Rubber Impact Buffers
crowned

nlm 26120
p. 916

Rubber-metal
Impact Buffer Rails

nlm 26130
p. 917

O-shaped Mounts

nlm 26300
p. 918

Industrial Shock Absorbers

nlm 26320
p. 919

Installation Flanges

new article extended article

Systems and components for mechanical engineering and terotechnology

nlm 27000



nlm 27620
p. 922



Fork Joints
with snap-on spring

nlm 27622
p. 923



Fork Joints
in stainless steel

nlm 27624
p. 924



Fork Joints

nlm 27625
p. 925



Rod Ends
with ball bearing
external thread

nlm 27626
p. 926



Rod Ends
with ball bearing
internal thread

nlm 27627
p. 927



Rod Ends
with slide bearing
external thread

nlm 27627
p. 928



igubal® Rod Ends
with slide bearing
external thread

nlm 27628
p. 929



Rod Ends
with slide bearing
internal thread

nlm 27628
p. 930



igubal® Rod Ends
with slide bearing
internal thread

nlm 27629
p. 931



Rod Ends
with slide bearing
external thread,
stainless steel

nlm 27630
p. 932



Rod Ends
with slide bearing
internal thread,
stainless steel

nlm 27631
p. 933



Rod Ends
with slide bearing
external thread,
narrow head

nlm 27632
p. 934



Rod Ends with slide bearing
internal thread, narrow head

nlm 27650
p. 935



Ball Joints
DIN 71802

nlm 27655
p. 936



Ball Seats
for angle joints
DIN 71805

nlm 27656
p. 937



Ball Studs
for angle joints
DIN 71803

nlm 27660
p. 938



Circlips
for ball seats
DIN 71805

nlm 27665
p. 938



Axial joints
similar to DIN 71802

nlm 27700
p. 939



Height Adjustment Bolts

nlm 27701
p. 940



Height Adjustment Bolts
with counter-nuts

nlm 27702
p. 941



Level-compensating
Components

nlm 27705
p. 942



Spherical Level-
compensating Bolts

nlm 27750
p. 943



Cap Elements
Type H2

nlm 27760
p. 944



Machine Feet

nlm 27800
p. 947



Plates for Swivel Pads
in plastic

nlm 27801
p. 948, 949



Plates for Swivel Pads
in die cast zinc or stainless steel

nlm 27802
p. 950



Extended Plates
for Swivel Pads
in die cast zinc

nlm 27803
p. 951



Plates for Swivel Pads
in stainless steel

nlm 27804
p. 953



Plates for Swivel Pads
with vibration absorption

nlm 27806
p. 954



Swivel Feet
with vibration absorption

nlm 27808
p. 955



Locating Feet
with vibration absorption

nlm 27810
p. 956



Threaded Spindles
for Swivel Pads
in steel or stainless steel

nlm 27811
p. 957



Ball Joints
with internal thread

nlm 27815
p. 959



Plates for Swivel Feet
in plastic

new article

extended article

Systems and components for mechanical engineering and terotechnology



nlm 27816
p. 960



Plates for Swivel Feet
in plastic, heavy-duty model

nlm 27817
p. 962, 963



Plates for Swivel Feet
in die cast zinc or stainless steel

nlm 27818
p. 964



Extended Plates
for Swivel Feet
in die cast zinc

nlm 27828
p. 965



Threaded Spindles
for Swivel Feet
in steel or stainless steel

nlm 27830
p. 967



Plates for Swivel Feet
ECO-Line, in die cast zinc,
stainless steel or plastic

nlm 27832
p. 968



Threaded Spindles
for Swivel Feet ECO-Line
in steel or stainless steel

nlm 27833
p. 969



Duck Feet

nlm 27835
p. 970

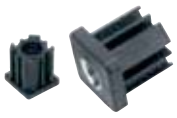

Screw-in Plugs
for square tubes

nlm 27836
p. 971



Screw-in Plugs
for tubes

nlm 27840
p. 972



Height-Adjustable Equipment Feet
for aluminium profiles

nlm 27841
p. 973



Height-Adjustable Equipment Feet

nlm 27850
p. 975



Hinges
in plastic,
detachable, left

nlm 27850
p. 976



Hinges
in plastic,
detachable, right

nlm 27852
p. 977



Hinges
in plastic

nlm 27853
p. 978



Hinges
in plastic with
clamping function

nlm 27854
p. 979



Hinges
with oblong
holes in plastic

nlm 27856
p. 979



Hinges
with guide tabs
in plastic, detachable

nlm 27857
p. 980



Hinges
in plastic with
a catching function

nlm 27858
p. 981



Hinges
in plastic with
adjustable friction

nlm 27865
p. 982



Hinges
with oblong holes
in die cast zinc

nlm 27868
p. 983



Hinges
in die cast zinc with
clamping function

nlm 27870
p. 984



Hinges
in aluminium,
detachable, left

nlm 27870
p. 985



Hinges
in aluminium,
detachable, right

nlm 27872
p. 986



Hinges
in aluminium

new article

extended article

Systems and components for mechanical engineering and terotechnology



nlm 28000
p. 988



Oil Level Gauges

nlm 28000
p. 989



Oil Level Gauges

nlm 28004
p. 990



Oil Level Sight Glasses

nlm 28006
p. 991



Press-In Oil Level Sight Glasses

nlm 28008
p. 991



Dome Oil Level Sight Glasses

nlm 28010
p. 992



Aluminium Oil Level Sight Glasses

nlm 28018
p. 992



Screw-In Protection Plugs

nlm 28020
p. 993



Screw-In Plugs

nlm 28022
p. 993



Press-In Plugs

nlm 28024
p. 994



Plastic Plugs

nlm 28026
p. 994



Aluminium Plugs

nlm 28028
p. 995



Hexagon Screw Plugs

nlm 28030
p. 996



Screw Plugs

nlm 28032
p. 997



Caps for Filler Necks

nlm 28034
p. 997



Vent Screws

nlm 28036
p. 998



Vent Screws
with splash guard

nlm 28038
p. 999



Vent Screws
with nonreturn valve

nlm 28040
p. 1000



Brass Vent Screws

nlm 28042
p. 1000



Brass Vent Screws
with nonreturn valve

nlm 28048
p. 1001



Press-In Plugs
with dipstick

nlm 28054
p. 1002



Vent Screws
with dipstick

nlm 28058
p. 1003



Vent Screws
with nonreturn valve and dipstick

nlm 28060
p. 1004



Dipsticks

nlm 28070
p. 1005



Filler Neck

nlm 28071
p. 1006



Filler Neck

✶ new article

■ extended article

Systems and components for mechanical engineering and terotechnology

nlm 29000



nlm 29000
p. 1009



Cross Clamps

nlm 29000
p. 1010



Cross Clamps

nlm 29000
p. 1011



Cross Clamps

nlm 29002
p. 1012



Cross Clamps

nlm 29002
p. 1012



Cross Clamps

nlm 29004
p. 1013



Cross Clamps

nlm 29004
p. 1013



Cross Clamps

nlm 29006
p. 1014



Angle Clamps

nlm 29006
p. 1015



Angle Clamps

nlm 29008
p. 1016



Angle Clamps

nlm 29008
p. 1017



Angle Clamps

nlm 29008
p. 1017



Angle Clamps

nlm 29010
p. 1018



Base Clamps

nlm 29010
p. 1019



Base Clamps

nlm 29012
p. 1020



Base Clamps

nlm 29012
p. 1020



Base Clamps

nlm 29014
p. 1021



Flange Clamps

nlm 29014
p. 1022



Flange Clamps

nlm 29014
p. 1023



Flange Clamps

nlm 29016
p. 1024



Flange Clamps

nlm 29016
p. 1024



Flange Clamps

nlm 29018
p. 1025



Flange Clamps

nlm 29020
p. 1025



Flange Clamps

nlm 29022
p. 1026



Sleeve Clamps

nlm 29024
p. 1027



Strap Clamps
with internal toothing

nlm 29026
p. 1028



Strap Clamps
with external toothing

nlm 29028
p. 1029



Strap Clamps
with internal toothing

nlm 29030
p. 1030



Strap Clamps
with internal toothing

nlm 29032
p. 1031



Joint Clamps
without toothing

nlm 29032
p. 1032



Joint Clamps
without toothing

nlm 29034
p. 1033



Joint Clamps
without toothing

nlm 29034
p. 1034



Joint Clamps
without toothing

nlm 29036
p. 1035



Joint Clamps
without toothing

nlm 29036
p. 1036



Joint Clamps
without toothing

★ new article

■ extended article

norelem

Systems and components for mechanical engineering and terotechnology

nlm 29040
p. 1037



Reducing Bushes
square

nlm 29042
p. 1037



Reducing Bushes
round

nlm 29050
p. 1038



Round and Square Tubes

nlm 29056
p. 1039



Tube Stoppers

nlm 29105
p. 1041



Linear Units

nlm 29120
p. 1042



Cross Clamp Guides

nlm 29125
p. 1043



Cross Clamp Guides

nlm 29130
p. 1044



Flange Clamp Guides

nlm 29135
p. 1045



Base Clamp Guides

nlm 29190
p. 1046

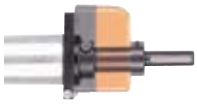

Adapter
for position indicators

nlm 29200
p. 1047



Base, single

nlm 29205
p. 1048



Base, double

nlm 29207
p. 1049



Clamp Base, double

nlm 29210
p. 1050



Adjusting Units

nlm 29215
p. 1051



Adjusting Rings

nlm 29240
p. 1052



Columns in stainless steel

new article

extended article



nlm 31000
p. 1056



Plane-Tables

nlm 31020
p. 1056



Precision Plane-Table
with column

nlm 31090
p. 1057



Receiving Cylinders
for workpieces with collar

nlm 31100
p. 1057



Joint Tripods
with hydraulical clamping

nlm 31102
p. 1058



Magnetic Measuring Tripod

nlm 31120
p. 1058



Magnetic Tripod

nlm 31125
p. 1059



Magnetic Tripod

nlm 31130
p. 1059



Transverse Holder

nlm 31140
p. 1060



Holders of dial gauges

nlm 31141
p. 1060



Holders of dial gauges
with fine-adjustment

nlm 31150
p. 1061



Joint Component

nlm 31152
p. 1061



Joint Components

nlm 31154
p. 1062



Joint Components

nlm 31156
p. 1062



Clamping Joints

★ new article

■ extended article



nlm 32501
p. 1066



Test Control Unit
of concentricity
Ø max. 35 mm

nlm 32501, 32513
p. 1067



Accessories for
test control unit
of concentricity,
Ø max. 35 mm

nlm 32506
p. 1068



Adjustable
Test Control Unit
of concentricity
Ø max. 80 mm

nlm 32501, 32513
p. 1069



Accessories for
test control unit
of concentricity,
Ø max. 80 mm

nlm 32540
p. 1072



Dial Gauge
DIN 878

nlm 32542
p. 1073



Digital Dial Gauges



nlm 33000
p. 1076



Screw Connection for dial gauges
with clamping shaft Ø 8

nlm 33010
p. 1077



Sliding Holder of dial gauges

nlm 33012
p. 1077



Holder of dial gauges
short version with thread

nlm 33014
p. 1078



Holders of dial gauges
long version with thread

nlm 33016
p. 1078



Holders of dial gauges
short version with smooth shaft

nlm 33018
p. 1079



Holder of dial gauges
for measuring yoke

nlm 33020
p. 1080



Probe
with face surface

nlm 33022
p. 1080



Probe
with flat point

nlm 33024
p. 1081



Probe
with reduced face surface

nlm 33026
p. 1081



Probe
with reduced oval point

nlm 33028
p. 1082



Flat Probe

nlm 33029
p. 1082



Flat Stepped Probe

nlm 33030
p. 1083



Probe
with reduced face surface

nlm 33032
p. 1083



Extension
for measuring inserts

nlm 33034
p. 1084



Flat Probe for fixed stop

nlm 33035
p. 1084



Flat Stepped Probe
for fixed stop

nlm 33036
p. 1085



Probe with reduced face surface
for fixed stop

nlm 33038
p. 1085



Extension for measuring inserts
fixed stop

nlm 33040
p. 1086



Measuring Inserts
with rounded cone point

nlm 33042
p. 1086



Measuring Inserts
with spherical point

nlm 33044
p. 1087



Measuring Inserts
wedge-shaped

nlm 33046
p. 1087



Measuring Inserts
with face surface

nlm 33048
p. 1088



Measuring Inserts
with oval point

nlm 33050
p. 1088



Measuring Inserts
with extended face surface

nlm 33052
p. 1089



Extensions
for measuring inserts

nlm 33058
p. 1089



Measuring Inserts Set
10 parts

nlm 33058
p. 1090



Measuring Inserts
in hardened steel
thread M 2,5

nlm 33058
p. 1091



Measuring Inserts
in hard metal
thread M 2,5

nlm 33060
p. 1092



Housing of protection
for dial gauges

nlm 33070
p. 1094



Holder of dial gauges
with deflection by 90°

nlm 33072
p. 1094



Holder of dial gauges
with deflection by 90°
probe with thread

nlm 33074
p. 1095



Holder of dial gauges
with deflection by 90°
probe with borehole

nlm 33076
p. 1095



Holder of dial gauges
with deflection by 180°
probe with borehole

nlm 33078
p. 1096



Holder of dial gauges
with deflection by 90°
probe with thread

Measuring and Testing Components

nlm 33000

nlm 33080
p. 1096



Holder of dial gauges
with deflection by 180°
probe with thread

nlm 33090
p. 1097



Prism Attachments

nlm 33092
p. 1097



Spacers
for prisms attachments

nlm 33100
p. 1098



Measuring Columns
with thread

nlm 33105
p. 1098



Slotted Round Nuts

nlm 33110
p. 1099



Pivoting Columns

nlm 33115
p. 1100



Pivoting Systems

nlm 33140
p. 1101



Measuring Fixtures

nlm 33145
p. 1103



Shaft Bearing
for measuring fixtures

nlm 33150
p. 1103



Measuring Arms

nlm 33180
p. 1104



Spring mounted
Centre Sleeve
with tension lever

nlm 33182
p. 1105



Spring mounted
Centre Sleeve
with lifting curve

nlm 33184
p. 1106



Adjustable Collet
for centring spikes

nlm 33190
p. 1106



Fixed Centring Spike

nlm 33202
p. 1107



Measuring Element
for toothed wheels

nlm 33205
p. 1108



Ball Holder

nlm 33250
p. 1109



Clamping Component Set

nlm 33260
p. 1110



Spring Clamp

nlm 33262
p. 1111



Columns
for spring clamps

new article

extended article



nlm 95010
p. 1116

Apparatuses Swivel and Fixed Castors standard version

nlm 95012
p. 1117

Sheet steel
Swivel and Fixed Castors
heavy-duty model

nlm 95016
p. 1118

Standard sheet steel Castors

nlm 95018
p. 1119

Sheet steel
Swivel and Fixed Castors
standard version

nlm 95020
p. 1120

Sheet steel
Swivel and Fixed Castors
heavy-duty model

nlm 95024
p. 1121

Sheet steel
Swivel and Fixed Castors
standard version

nlm 95028
p. 1122

Sheet steel
Swivel and Fixed Castors
medium duty model

nlm 95030
p. 1123

Sheet steel
Swivel and Fixed Castors
heavy-duty model

nlm 95032
p. 1124

Steel welded
Swivel and Fixed Castors
heavy-duty model

nlm 95034
p. 1125

Sheet steel
Swivel and Fixed Castors
standard version

nlm 95036
p. 1126

Sheet steel
Swivel and Fixed Castors
heavy-duty model

nlm 95040
p. 1127

Sheet steel
Swivel and Fixed Castors
heavy-duty model

nlm 95050
p. 1128

Standard Solid Rubber Tyres
on pressed steel rim

nlm 95053
p. 1128

Elastic Solid Rubber Tyre

nlm 95056
p. 1129

Nylon Wheels
with injection-moulded tread

nlm 95057
p. 1129

Guide Rollers

nlm 95058
p. 1130

Aluminium Wheels
with injection-moulded tread

nlm 95059
p. 1130

Heavy-Duty Castors

nlm 95060
p. 1131

Heavy-Duty Wheels
wheel body welded

nlm 95062
p. 1131

Nylon Wheels

nlm 95064
p. 1132

Nylon Wheels
heavy-duty model

nlm 95150
p. 1135

Ball Transfer Units
with sheet steel housing

nlm 95152
p. 1136

Ball Transfer Units
with sheet steel housing and
plastic load ball

nlm 95154
p. 1137

Spring-loaded Ball Transfer Units

nlm 95156
p. 1138

Ball Transfer Units
with solid steel housing

nlm 95158
p. 1138

Ball Transfer Units
with fastening holes,
without housing

nlm 95160
p. 1139

Ball Transfer Units
with spring clip

nlm 95162
p. 1140

Assembly tool
for ball transfer units

nlm 95164
p. 1140

Tolerance Rings

★ new article

■ extended article



nlm 96382
p. 1142



Precision Gauge Strip

nlm 96390
p. 1143



Head Chain
with ring clamp

nlm 96450
p. 1143



Magnetic Labels
for the store from the roll,
pre-stamped

nlm 96455
p. 1144



Magnetic Labels for stores

nlm 96460
p. 1144



Magnetic Tape Rolls

nlm 96465
p. 1145



Magnetic C Profiles

nlm 96466
p. 1145

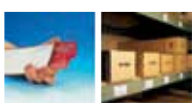

Transparent Magnetic Plaques
open on the side

nlm 96470
p. 1146



Magnetic Envelopes

nlm 96471
p. 1146



Magnetic Envelopes
for problem cases

nlm 96500
p. 1147



Surface Protective Nets

nlm 96510
p. 1147

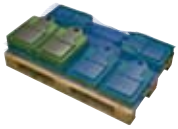

Net Protective Mat

nlm 96610
p. 1148



Supercraft Mallet
non-rebound

nlm 96614
p. 1148



Mallet Inserts
for supercraft mallets

nlm 96630
p. 1149



Taper Cleaner
for Morse tapers

nlm 96632
p. 1149



Taper Cleaner
for short tapers

nlm 96634
p. 1150



Taper Cleaner
for hollow shank tapers

nlm 96636
p. 1150



Cylinder Cleaners

nlm 96638
p. 1151



Cylinder Cleaners
two parts



nlm 97900
p. 1154



Klüber „Quietsch-Ex“

nlm 97901
p. 1154



Klüber Lubricating Paste

nlm 97903
p. 1155



Klüber Copper Paste lead-free

nlm 97905
p. 1155



Klüber Safety Lubricating Grease

nlm 97907
p. 1156



Klüber Molybdenum Disulphide Lubricant

nlm 97909
p. 1156



Klüber Liquid Chain Grease

nlm 97911
p. 1157



Klüber Anti-rust and Lubricating Wax

nlm 97917
p. 1157



Klüberbio Adhesive Lubricating Oil

nlm 97920
p. 1158



Klüber Lubricating Paint UNIMOLY C 220

nlm 97930
p. 1158



Ballistol All-purpose Oil in foods quality

nlm 97990
p. 1159



LOCTITE Liquid Epoxy Metals

nlm 97990
p. 1160



LOCTITE Liquid Epoxy Metals

nlm 97990
p. 1161



LOCTITE Screw Lock

nlm 97990
p. 1162



LOCTITE Universal Adhesive

nlm 97990
p. 1162



LOCTITE Thread Sealant

nlm 97990
p. 1163



LOCTITE Surface Sealant

nlm 97990
p. 1163



LOCTITE Adhesive and Sealant

nlm 97990
p. 1164



LOCTITE Jointing Product

nlm 97990
p. 1164



LOCTITE Cleaner

nlm 97990
p. 1165



LOCTITE Activators

nlm 97990
p. 1165



Dosing Equipment

★ new article

■ extended article

Flexible standard component system

Base Plates Plates Circular Plates Profiles Angle Plates Four Face Angle Plates	page	59 – 88
Toggle Locators Locating Feet Support Blocks Spacing Elements	page	89 – 136
Spring Plungers Locking Bolts Stops Centring and positioning components Fixings Slot nuts	page	137 – 260
Clamps Clamping Devices	page	261 – 360
Quick Acting Clamps Pneumatic Clamps Fasteners	page	361 – 398
Operating Parts	page	399 – 572
Screws Nuts Washers Grub Screws Grippers Threaded Inserts Lifting Eye Bolts Side Pull Rings Sundry parts	page	573 – 664
Drill Jig Elements Drill Jig Drill Bushes	page	665 – 688
Magnets	page	689 – 702

01000

Base Plates
Plates
Circular Plates
Profiles
Angle Plates
Four Face Angle Plates



Air-cushin disk



Material:
Stabilised aluminium alloy; approx 520 N/mm² tensile strength.

Surface finish:
Upper plate naturally anodized, lower plate hard-anodized; layer thickness approx. 50 µm, grey-brown

Sample Order:
nlm 01020-011

Note:
Air-cushion discs consist of two disks superimposed one on the other, where the upper disk has holes drilled in to take devices or other base plates. Further holes can be drilled as required.
The lower plate is hard-anodized and has small air outlet nozzles, which are distributed evenly over the whole of the lower surface.
Size 1 can be used to manufacture multiple air-cushion discs for moving larger loads. They are employed in pairs to do so or in sufficient quantity. In the compound several air-cushion discs can be connected and operated by a single hand-operated valve or foot switch. When the compressed air is switched on at a pressure of max. 8 bar and min. 3 bar, the air-cushion disc lifts of by approx. 0.03 to 0.15 mm. The out-flowing compressed air causes the disc to move friction-free on the air cushion.
The finer the surface on which the disc moves, the more dense the air cushion and the greater the mass that can be moved. The following loads can be moved on a polished surface of approx. Ra 3.2:
Size 1 approx. 450 kg at 6 bar
Size 2 approx. 630 kg at 6 bar
Table bolts present no obstacle to the movement of air-cushion discs. Despite this, it may be necessary to increase the pressure by about 1 bar, to compensate the loss of pressure from those nozzles that come to rest over the bolts.

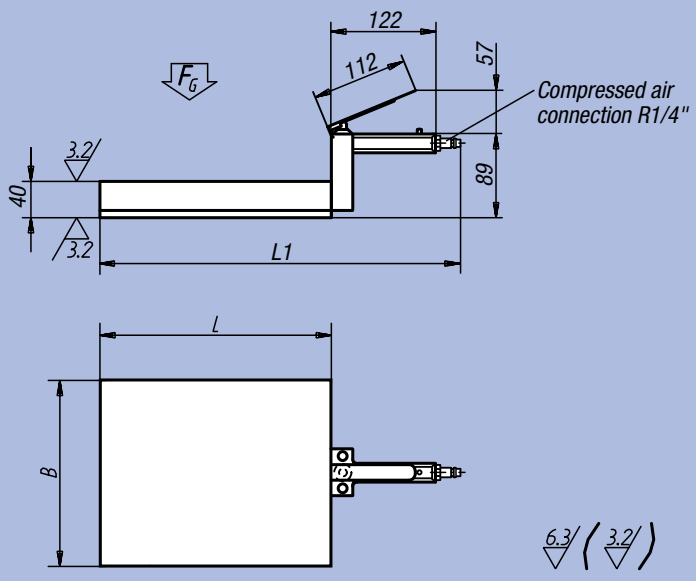

Compressed air connection 1-6 bar.

The disks may only be drilled to a depth of 23 mm (included drill tip)

Positon of the fixation holes and the fixation screws

01020-011

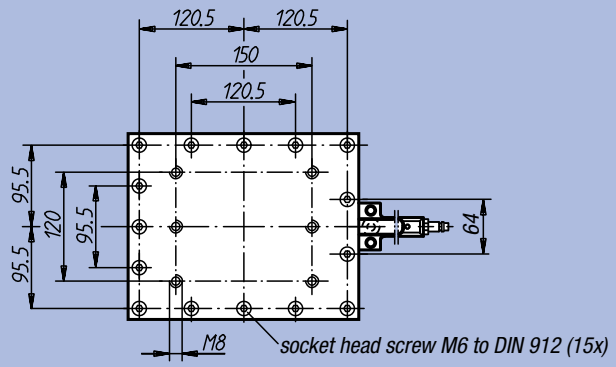

01020-021

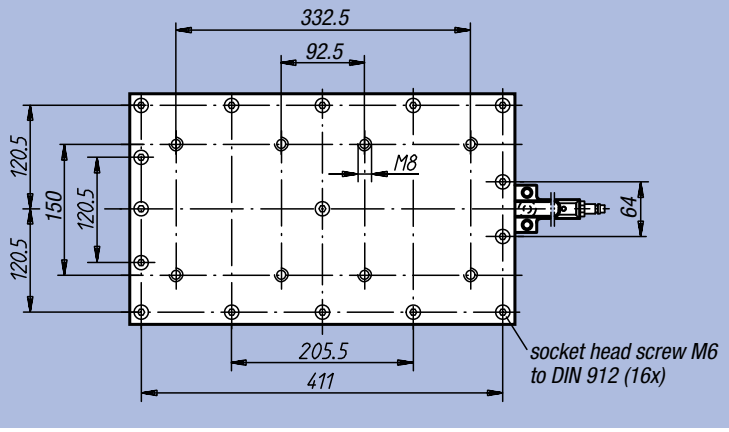

Order No.	B	L	L1	FG (N)	kg
01020-011	205	255	403	8000	5,960
01020-021	255	425	573	10000	11,800

Air-cushin disk

Function principle:
The air-cushion disc has a chamber in which there is a predominant air pressure, which acts evenly on all walls. A number of small, calibrated valves on the underside of this chamber allow the air to vent. The resultant pressure differential between the upper ad lower surface enables the disc to lift off (recoil principle).
The out-flowing air forms a film approximately 0.03 - 0.15 mm thick under the disc dependent on the load and the air pressure. This air cushion, as it is called, carries the disc but also acts as a back-pressure, preventing the pressure inside the chamber from falling to 0. The better the surface quality, the smaller the quantity escaping. The seat on which the air-cushion disc is moved, should match a quality of Ra 3,2 with an evenness of approx. 0.02%.
Air-cushion discs enable heavy work pieces to be moved easily on machine-tool tables or other seating surfaces. The force required to move them is approx. 100 times lower than the corresponding sliding friction (friction coefficient e.g. 0.2).

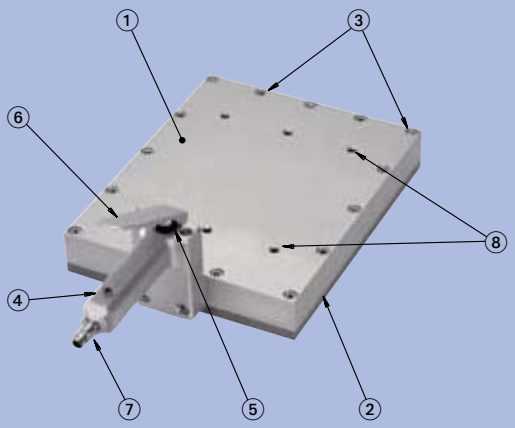

Nomenclature

1. Working surface
2. Support suface
3. Upper and lower plate attachment screws
4. Operating handle
5. Valve
6. Valve operating handle
7. Air supply:
   Connector thread ¼"
   Pressure: 1-6 bar
8. Location holes

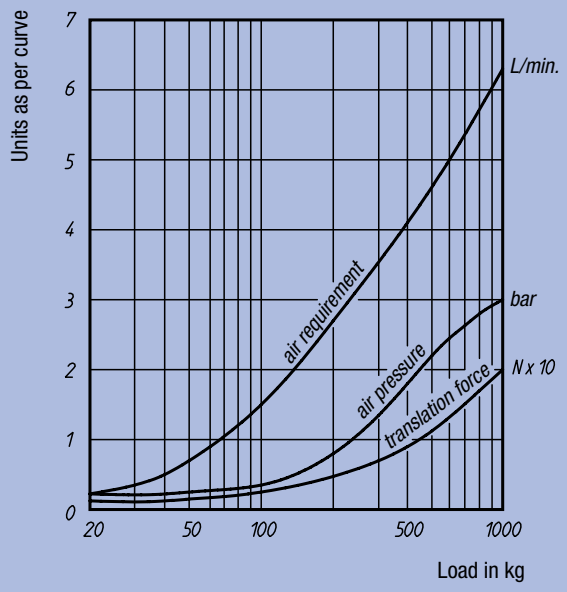

Diagram of the various operating data

Application example:

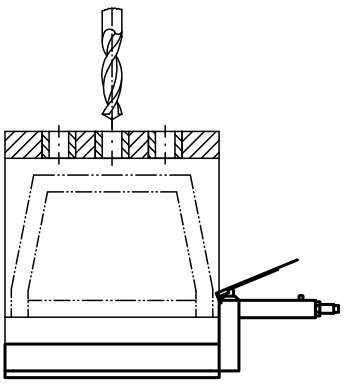

Functional principle:

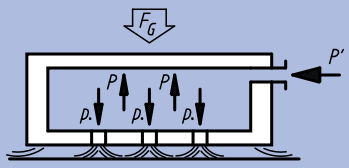

The cushion of air created by the fine jets, lift the disk such that it "hovers" without friction.

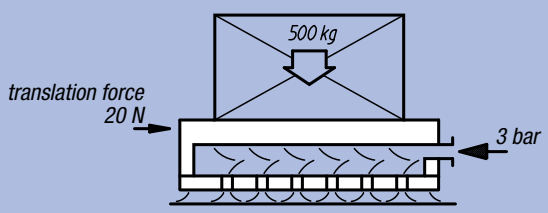

Cast-iron Base with T-slots



Material:
Stabilised GJL 250 grey cast iron
Sample Order:
nlm 01040-04

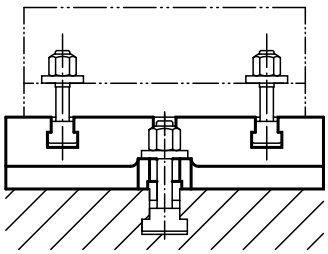

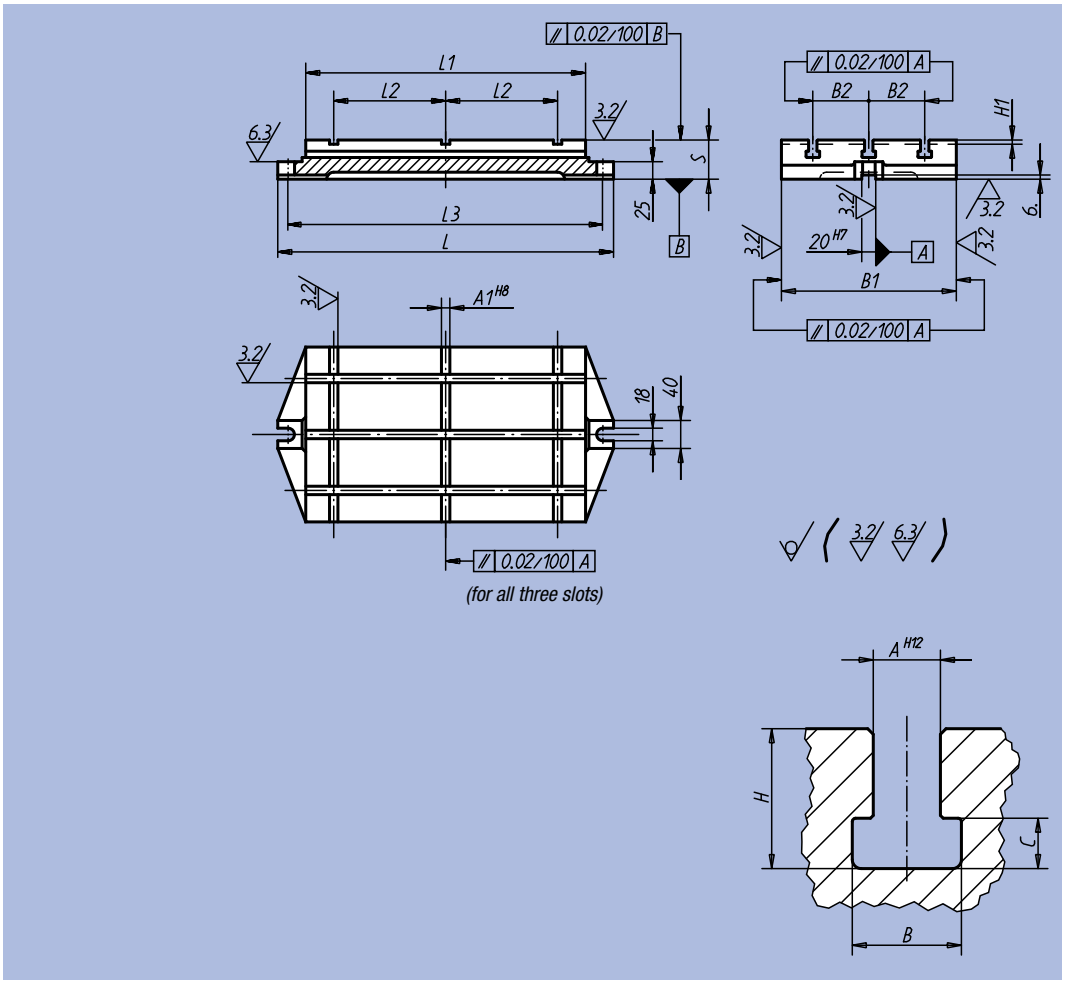

Order No.	L	L1	L2	L3	B1	B2	H1	S	A1	A	B	C	H	kg
01040-01	280	200	70	250	125	40	4	50	6	10	16,5	7	21	8,0
01040-02	330	250	100	300	160	50	4	50	8	10	16,5	7	21	12,3
01040-03	395	315	125	365	200	63	4	56	10	12	19,5	8	25	21,0
01040-04	480	400	160	450	250	80	6	56	12	12	19,5	8	25	33,0
01040-05	580	500	220	550	315	100	6	63	14	14	23	9	28	58,5
01040-06	710	630	280	680	400	125	6	63	18	14	23	9	28	93,8

Steel Base Plates

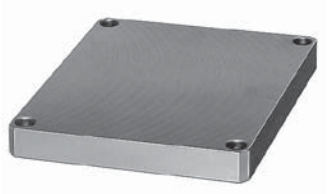

Material:
Tempered steel 1.1181
Surface finish:
natural finish
Sample Order:
nlm 01060-01

machined surfaces:
±0.25 mm
thickness: +0/-0.5 mm
raw surfaces:
±2 mm

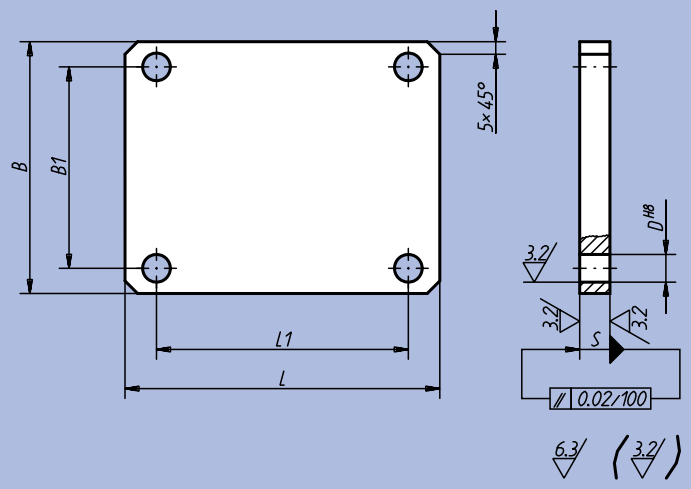

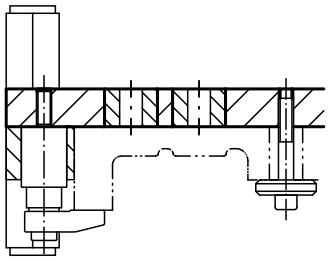

Order No.	L	L1	B	B1	S	D	kg
01060-01	125	100	100	80	12	11	1,2
01060-02	160	140	125	100	16	11	2,5
01060-03	200	180	160	140	20	13	4,9
01060-04	250	220	200	180	20	13	7,8
01060-05	315	280	250	220	20	13	12,3

Application: jig using NORELEM parts

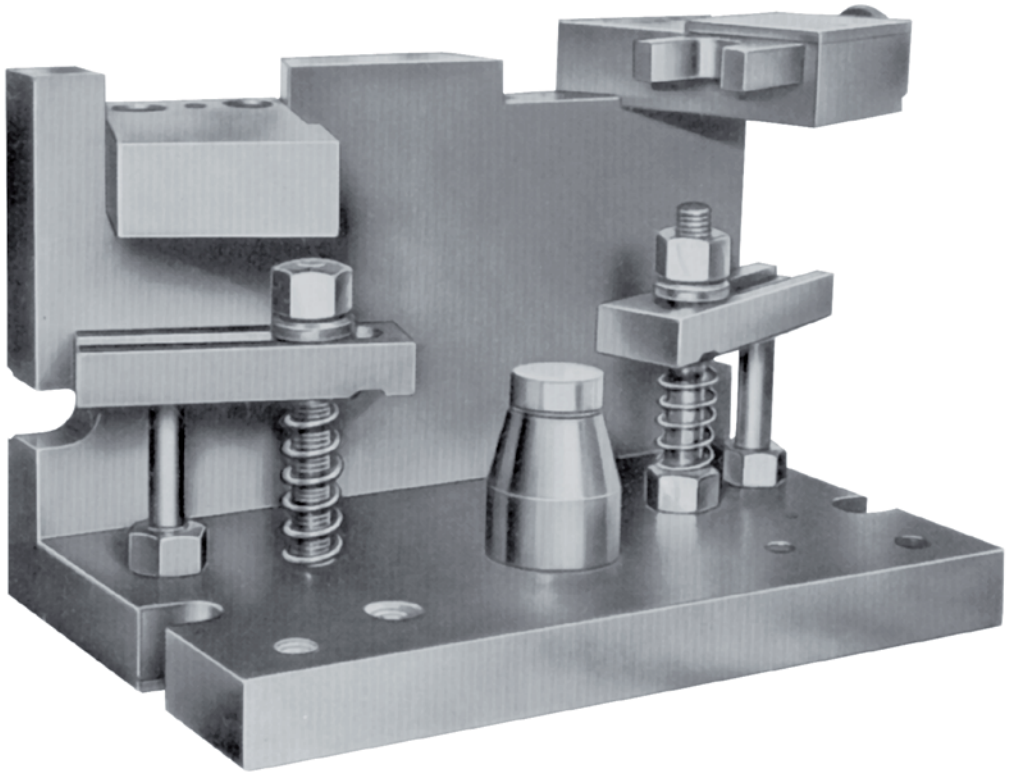

Base Plates



Material:
Grey cast iron GJL 250
Surface finish:
Mounting surfaces ground
Sample Order:
nlm 01127-005060
Note:
The base plates are positioned using close-tolerance bolts 07533-12055, which are placed in the location holes. The clearance holes for DIN 912 attachment bolts are used for further attachment.

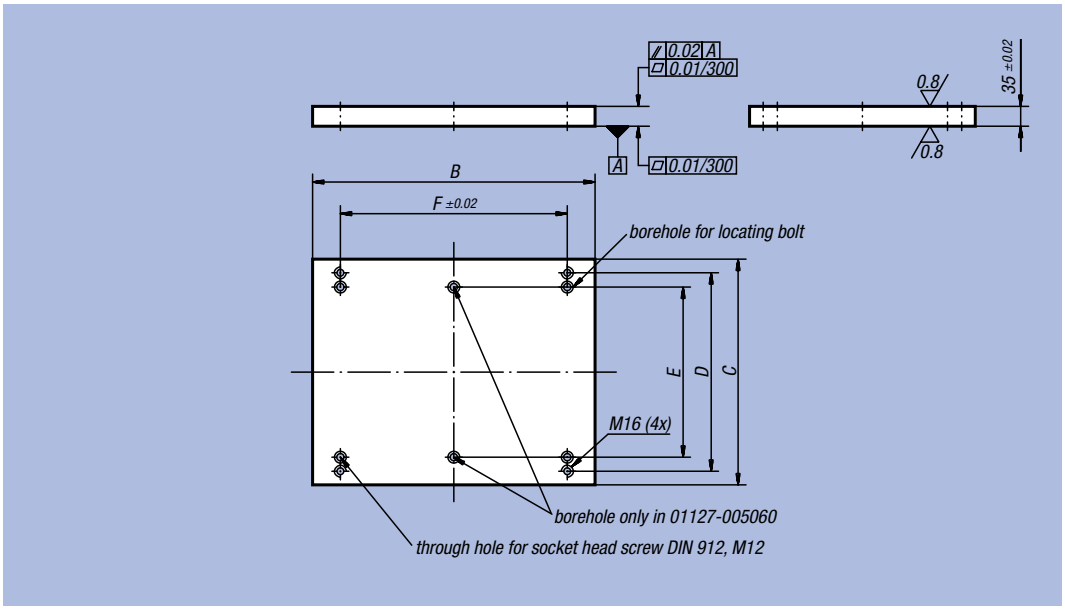

Order No.	B	C	D	E	F	suitable Locating Bolts	kg
01127-003040	398	298	250	200	300	07533-12055	31
01127-004050	498	398	350	300	400	07533-12055	51
01127-005060	598	498	450	400	500	07533-12055	77

Rectangular precision steel plates



Material:
Steel 1.1730
Surface finish:
Natural finish, ground
Sample Order:
nlm 01130-04X500
(Please also indicate dimension L)
Note:
The precision steel plates are particularly suitable base plates in the mechanical engineering, tool-making and device construction industries. The dimension L is machined by saw blade and is always supplied with an excess.

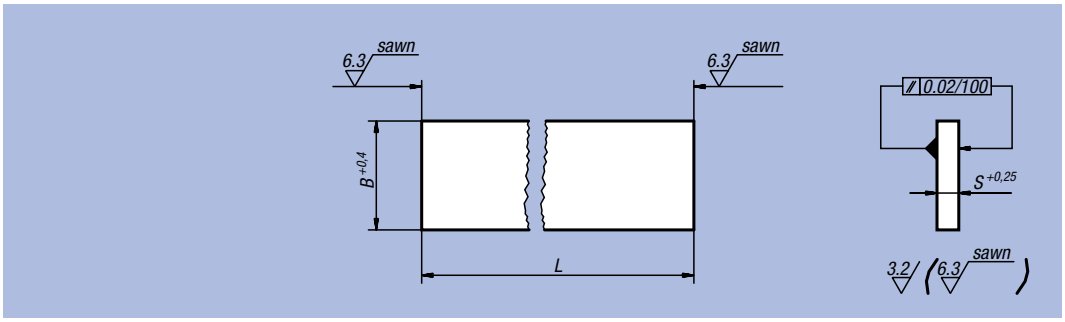

Order No.	L = length	B	S	kg/100
01130-01X	250 / 500 / 750 / 1000	40	8	0,251
01130-02X	250 / 500 / 750 / 1000	50	10	0,393
01130-03X	250 / 500 / 750 / 1000	63	12	0,593
01130-04X	250 / 500 / 750 / 1000	80	16	1,005
01130-05X	250 / 500 / 750 / 1000	100	16	1,256
01130-06X	250 / 500 / 750 / 1000	100	20	1,570
01130-07X	250 / 500 / 750 / 1000	125	25	2,453
01130-08X	250 / 500 / 750 / 1000	150	25	2,944
01130-09X	250 / 500 / 750 / 1000	160	32	4,019
01130-10X	250 / 500 / 750 / 1000	200	32	5,024
01130-11X	250 / 500 / 750 / 1000	300	40	9,420

Plates

grey cast iron or aluminium



Material:
Stabilised GJL 250 grey cast iron
or EN AW-7075
Sample Order:
nlm 01140-07X300
(Please also indicate dimension L)
On request:
Length 800 mm en grey cast iron.

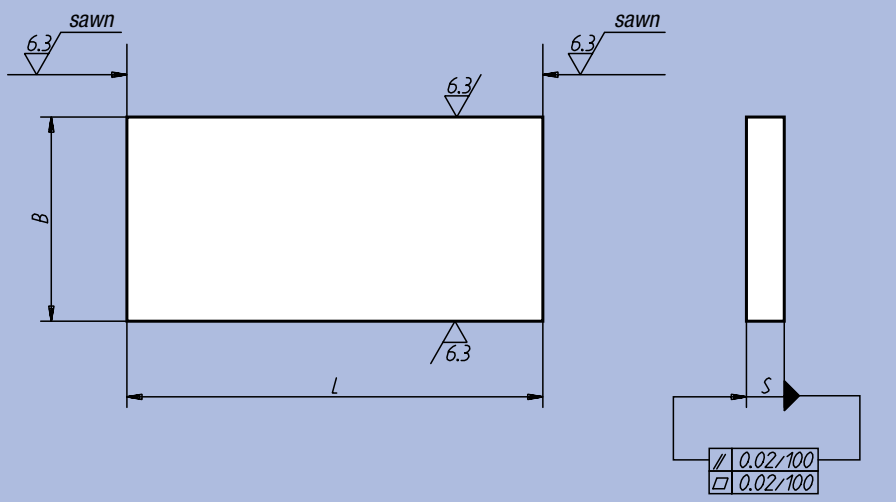

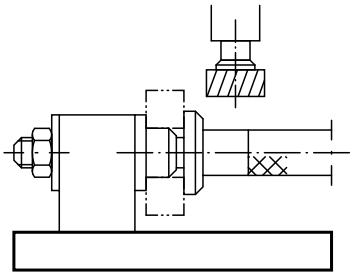

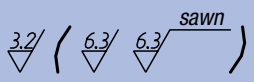

machined surfaces:
grey cast iron: +0.2 mm / +0.5 mm
aluminium: ± 0.1 mm
tolerances of lengths:
≤200 mm: +1/+5
from 201 mm to 400 mm: +4/+15
> 400 mm: +13/+40

Order No. Surface finish grey cast iron	Order No. Surface finish aluminium	L = length	B	S
01140-01X	01140-201X	300	40	10
01140-02X	01140-202X	300	50	12
01140-03X	01140-203X	300	63	16
01140-04X	01140-204X	200 / 300 / 400 / 600 / 800	80	20
01140-05X	01140-205X	200 / 300 / 400 / 600 / 800	100	20
01140-06X	01140-206X	200 / 300 / 400 / 600 / 800	160	20
01140-061X	01140-2061X	200 / 300 / 400 / 600 / 800	200	20
01140-062X	01140-2062X	200 / 300 / 400 / 600 / 800	250	20
01140-07X	01140-207X	200 / 300 / 400 / 600 / 800 / 1200	125	25
01140-08X	01140-208X	200 / 300 / 400 / 600 / 800 / 1200	200	25
01140-081X	01140-2081X	200 / 300 / 400 / 600 / 800 / 1200	250	25
01140-082X	01140-2082X	200 / 300 / 400 / 600 / 800 / 1200	315	25
01140-09X	01140-209X	200 / 300 / 400 / 600 / 800 / 1200	160	32
01140-10X	01140-210X	200 / 300 / 400 / 600 / 800 / 1200	250	32
01140-101X	01140-2101X	200 / 400 / 600 / 800 / 1200	315	32
01140-102X	01140-2102X	200 / 300 / 400 / 600 / 800 / 1200	400	32
01140-11X	01140-211X	200 / 400 / 600 / 800 / 1200	200	40
01140-12X	01140-212X	200 / 400 / 600 / 800 / 1200	250	40
01140-120X	-	200 / 400 / 600 / 800 / 1200	315	40
01140-121X	-	200 / 300 / 400 / 600 / 800 / 1200	400	40
01140-13X	-	200 / 400 / 600 / 800 / 1200	315	50
01140-131X	-	200 / 300 / 400 / 600 / 800 / 1200	500	50

Pallets



Material:
Grey cast iron GJL 250
Surface finish:
Mounting surfaces ground
Sample Order:
nlm 01148-005050
Note:
The pallet positioning and attachment holes are sized to pallets for machine tools pursuant to DIN 55 201 and to pallets for machine tools pursuant to JIS 6337-1980.

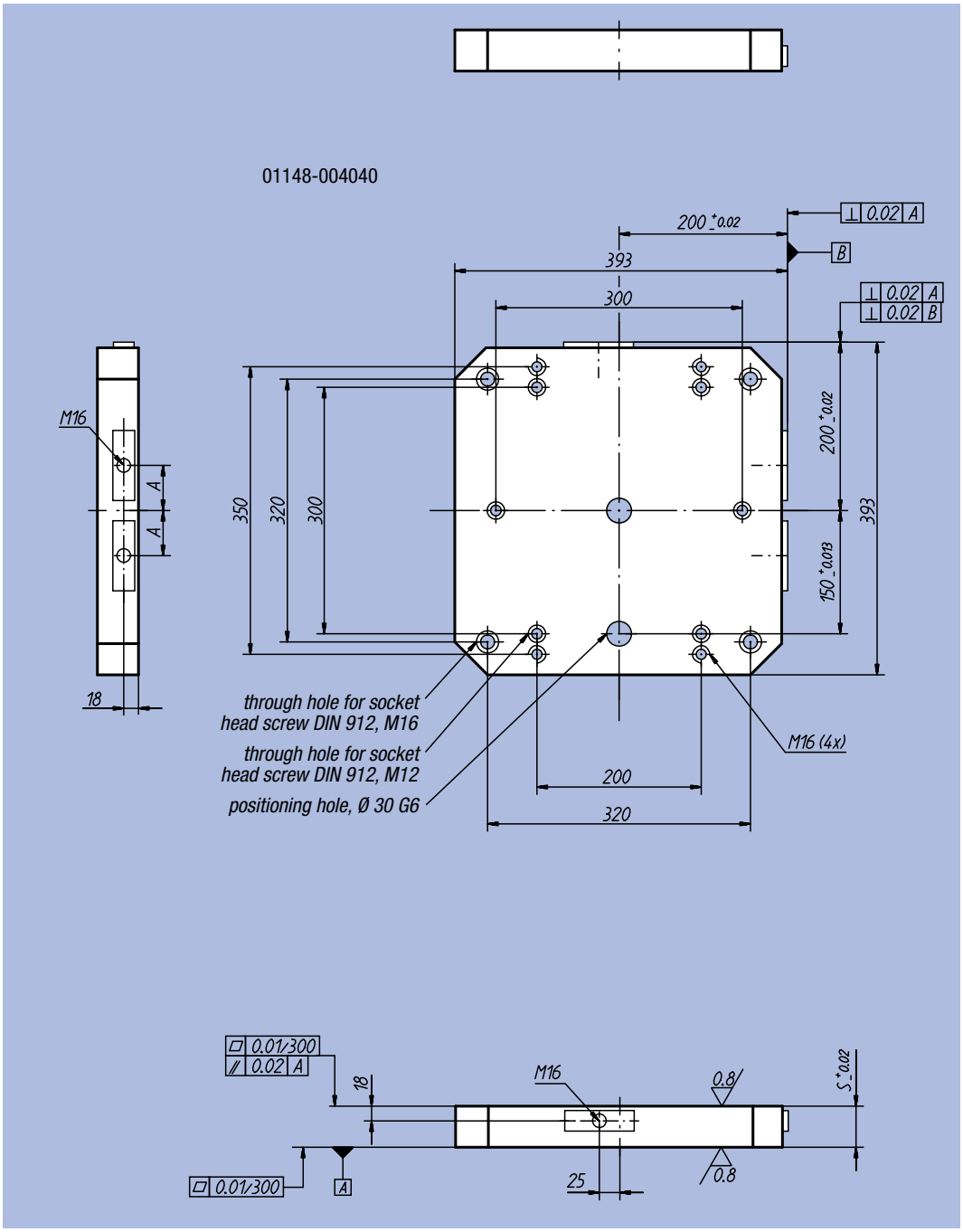

Order No.	A	S	kg
01148-004040	55	50	58
01148-005050	75	50	90
01148-006363	100	50	140
01148-008080	135	60	260

Pallets

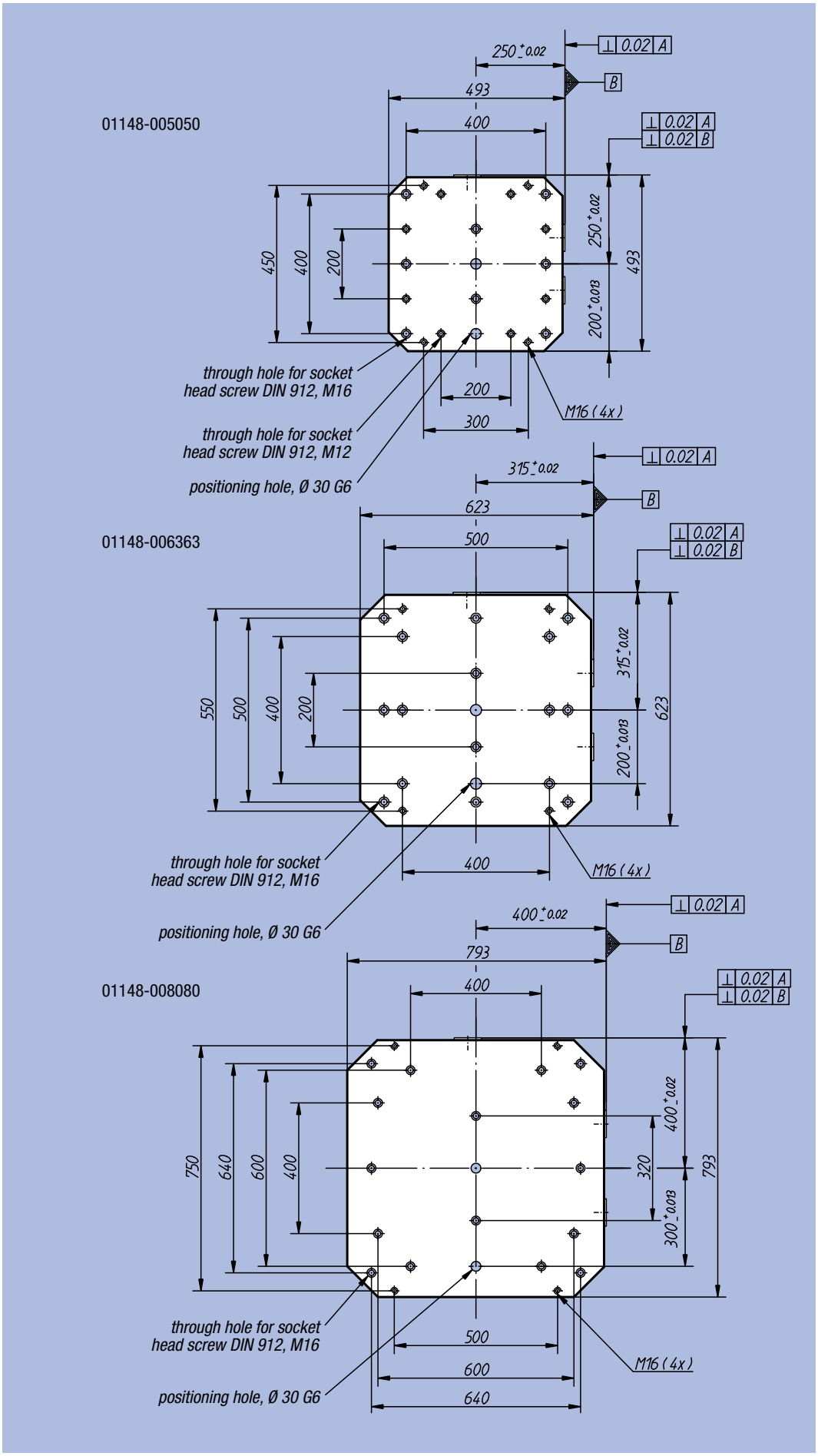
01148-005050
250 +0.02
493
400
⊥ 0.02 A
B
⊥ 0.02 A
⊥ 0.02 B
450
400
200
250 +0.02
493
200 +0.013
through hole for socket
head screw DIN 912, M16
through hole for socket
head screw DIN 912, M12
positioning hole, Ø 30 G6
200
300
M16 (4x)
01148-006363
315 +0.02
623
500
⊥ 0.02 A
B
⊥ 0.02 A
⊥ 0.02 B
550
500
400
200
315 +0.02
623
200 +0.013
through hole for socket
head screw DIN 912, M16
positioning hole, Ø 30 G6
400
M16 (4x)
01148-008080
400 +0.02
793
400
⊥ 0.02 A
B
⊥ 0.02 A
⊥ 0.02 B
750
640
600
400
400 +0.02
320
793
300 +0.013
through hole for socket
head screw DIN 912, M16
positioning hole, Ø 30 G6
500
600
640
M16 (4x)

Base Plates

grey cast iron

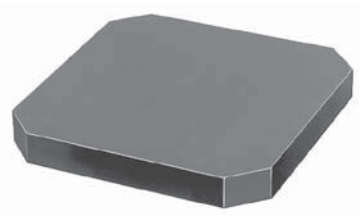

Material:
Stabilised GJL 250 grey cast iron

Sample Order:
nlm 01150-002

Note:
On request, the plates are also available with slots.

Type A ground supporting faces (Ra 0,8).

Type B ground supporting faces (Ra 0,8) and edges (Ra 1,6) ground.

Type C milled supporting faces and edges (Ra 3,2).

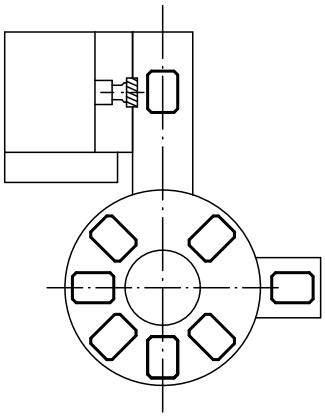

Type A

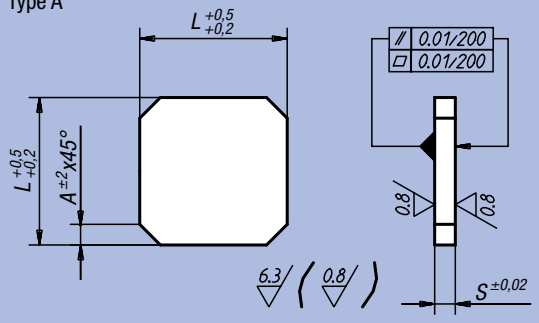

Type B

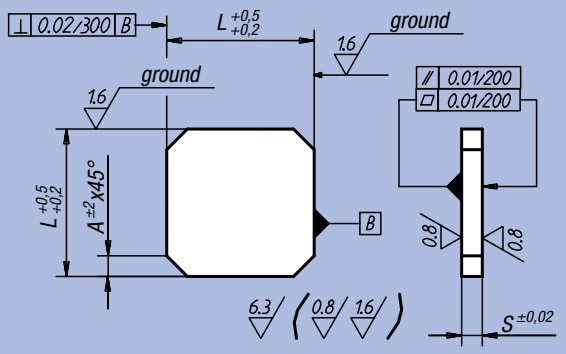

Type C

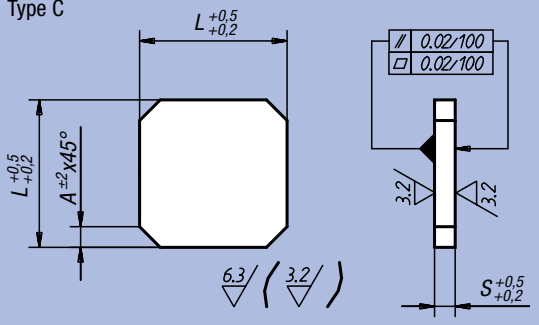

Order No. Type A	Order No. Type B	Order No. Type C	L	S	A	□ kg
01150-001	01150-0011	01150-00111	200	25	25	7,2
01150-002	01150-0021	01150-00211	250	35	35	17,0
01150-004	01150-0041	01150-00411	320	40	40	31,0
01150-006	01150-0061	01150-00611	400	45	50	56,2
01150-008	01150-0081	01150-00811	500	50	60	97,5
01150-010	01150-0101	01150-01011	630	63	70	195,0
01150-012	01150-0121	01150-01211	800	70	100	320,0

Rectangular Block

grey cast iron or aluminium



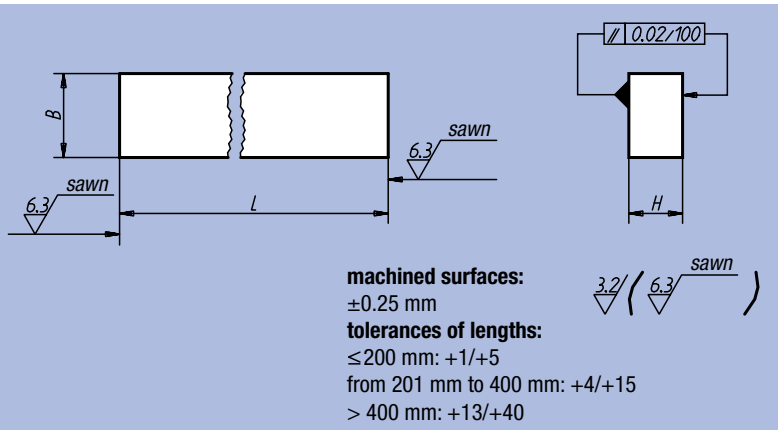

machined surfaces:
±0.25 mm
tolerances of lengths:
≤200 mm: +1/+5
from 201 mm to 400 mm: +4/+15
> 400 mm: +13/+40

Material:
Stabilised GJL 250 grey cast iron
or EN AW-7075
Sample Order:
nlm 01160-05X300
(please also indicate dimension L)

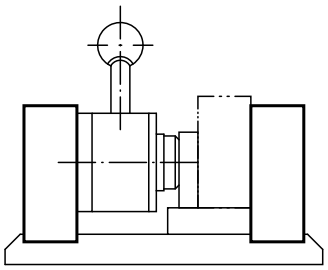

Order No. Surface finish grey cast iron	Order No. Surface finish aluminium	L = length	B	H
01160-02X	01160-202X	300	32	20
01160-03X	01160-203X	300	40	25
01160-04X	01160-204X	300 / 600 / 800	50	32
01160-05X	01160-205X	300 / 600 / 800	63	40
01160-06X	01160-206X	300 / 600 / 1000	80	50
01160-07X	01160-207X	300 / 600 / 1000	100	63
01160-08X	01160-208X	300 / 600	125	80

Cast-iron Hollowed Base

grey cast iron



Material:
Stabilised GJL 250 grey cast iron
Sample Order:
nlm 01180-03

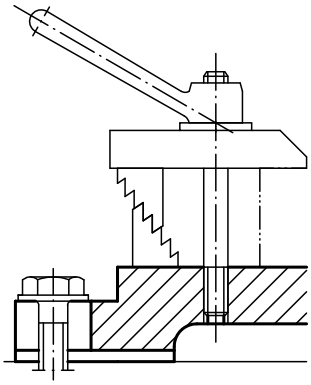

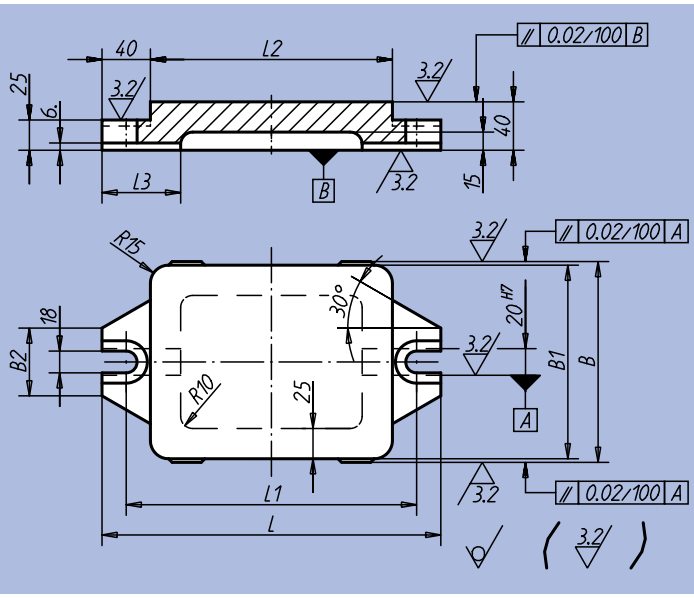

Order No.	L	L1	L2	L3	B	B1	B2	kg
01180-01	240	200	160	65	166	160	56	7,0
01180-02	280	240	200	65	166	160	56	8,4
01180-03	330	290	250	70	206	200	74	12,5
01180-04	395	355	315	75	256	250	74	18,6

Cast-iron Base

with or without T-slots



Material:
Stabilised GJL 250 grey cast iron
Sample Order:
nlm 01250-3203701
Note:
Other slot widths available on request.

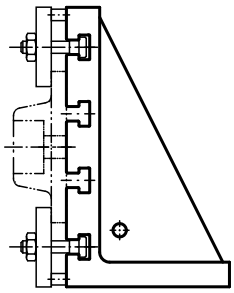

machined surfaces:
+0.2 mm/ +0.5 mm
raw surfaces:
±2 mm

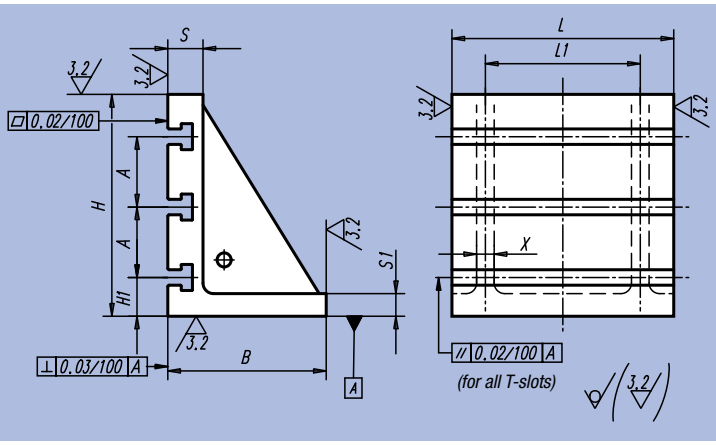

Order No. Surface finish without T-slots	Order No. Surface finish with T-slots	L	L1	B	H	H1	S	S1	A	X	T-slot	kg
01250-100125	-	100	40	100	125	-	20	10	-	10	-	3,0
01250-125160	-	125	100	100	160	-	20	10	-	10	-	4,4
01250-200250	-	200	120	125	250	-	30	15	-	15	-	15,0
01250-250300	-	250	200	150	300	-	40	20	-	20	-	30,0
01250-320370	01250-3203701	320	280	200	370	65	50	25	80	25	14	61,0
01250-400450	01250-4004501	400	280	265	450	75	60	30	100	30	18	114,0
01250-500550	01250-5005501	500	360	315	550	75	70	35	100	35	18	203,0
01250-630640	01250-6306401	630	520	350	640	80	80	40	160	35	22	326,0
01250-700750	01250-7007501	700	600	400	750	135	80	40	160	40	22	428,0

Aluminium Angle Plates

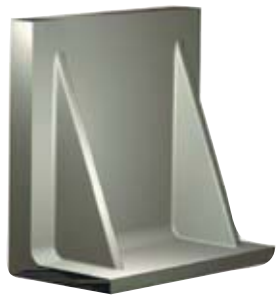

Material:
Aluminium (Rm 330 N/mm², 110 HB)
Sample Order:
nlm 01252-260250

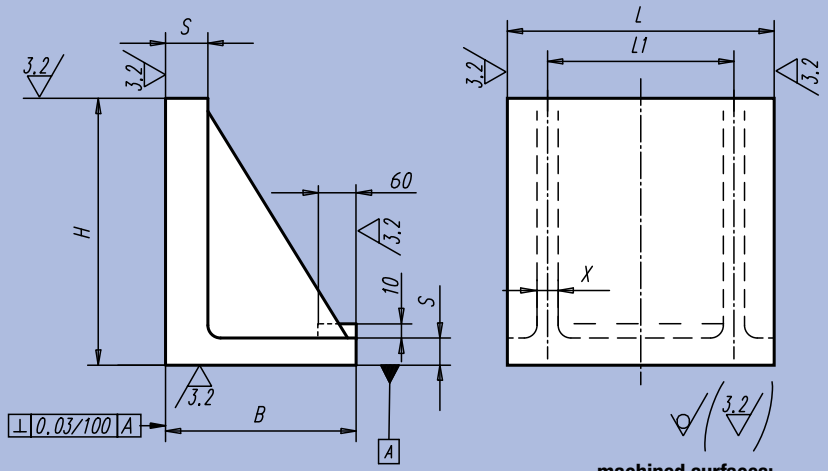

machined surfaces:
+0.2 mm/ +0.5 mm
raw surfaces:
±2 mm

Order No.	B	H	L	L1	S	X	kg
01252-260250	150	250	260	155	20	15	6,6
01252-335355	225	355	335	200	25	20	16,1
01252-410450	270	450	410	245	30	15	27,0

Engineering and producing cost-effectively with NORELEM:

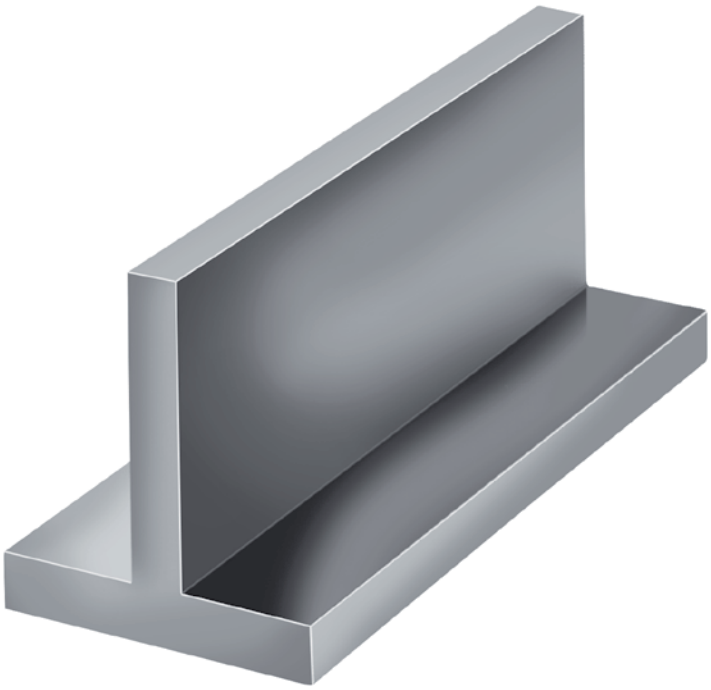

Norelem basic element: T-profile



Finished product

Notes:

Single-sided Angle Plate



Material:
Meehanite casting GJL 300

Surface finish:
Reference surfaces
precision-machined.
The clamping surface is pre-machined with a 1 mm overmeasure.

Sample Order:
nlm 01263-006376

Note:
The angle plates are sized to pallets for machine-tools pursuant to DIN 55201 and to pallets for machine tools pursuant to JIS 6337-1980. Lifting eye bolts are supplied for transportation.

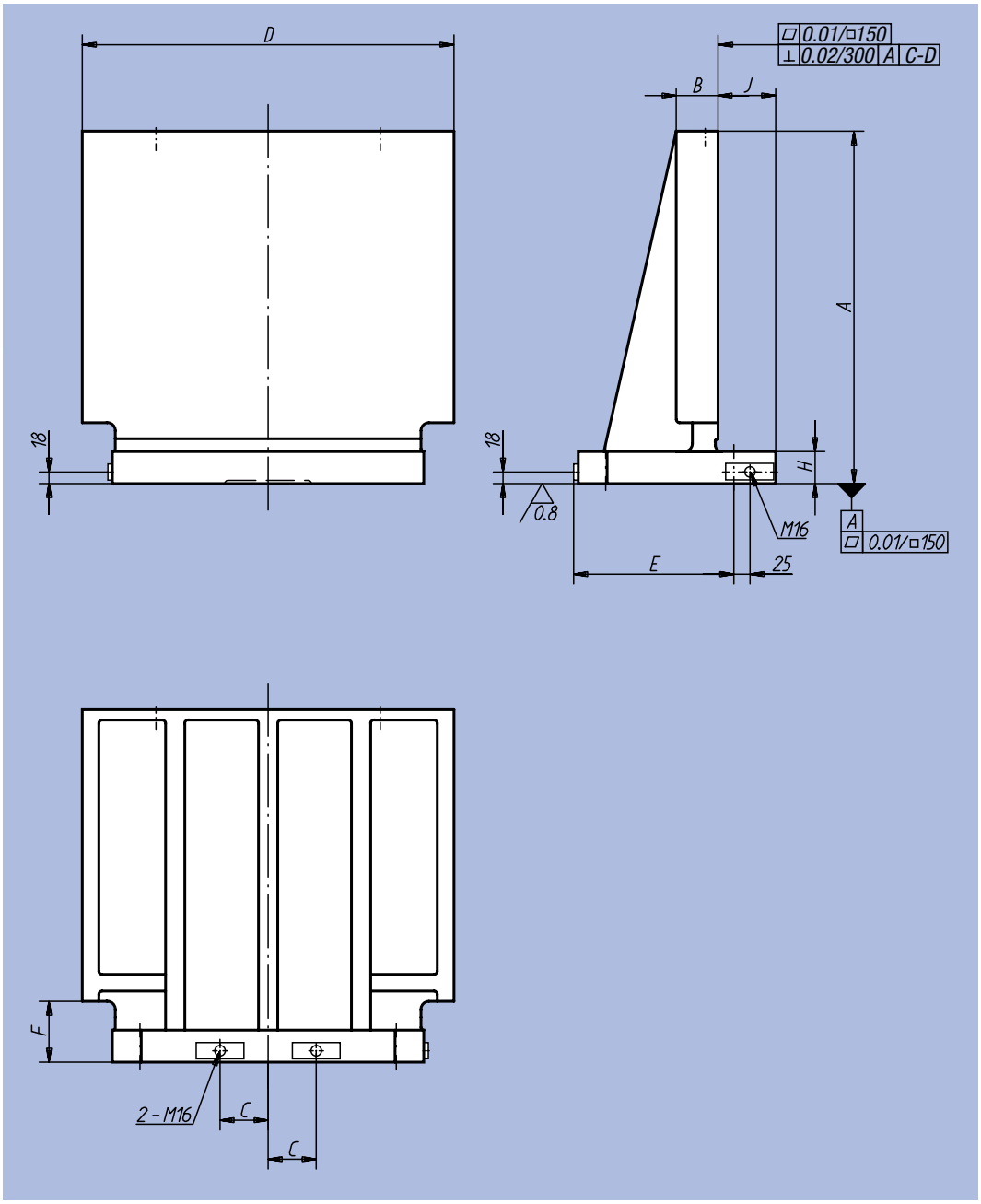

Order No.	A	B	C	D	E	E1	F	G	H	J	kg
01263-004047	450	61	55	470	200	24	85	20	45	89	98
01263-005058	550	66	75	580	250	24	95	20	50	89	161
01263-006376	700	76	100	760	315	49	100	25	55	114	313
01263-008090	800	81	135	900	400	49	100	25	60	114	434

Single-sided Angle Plate

01263-004047

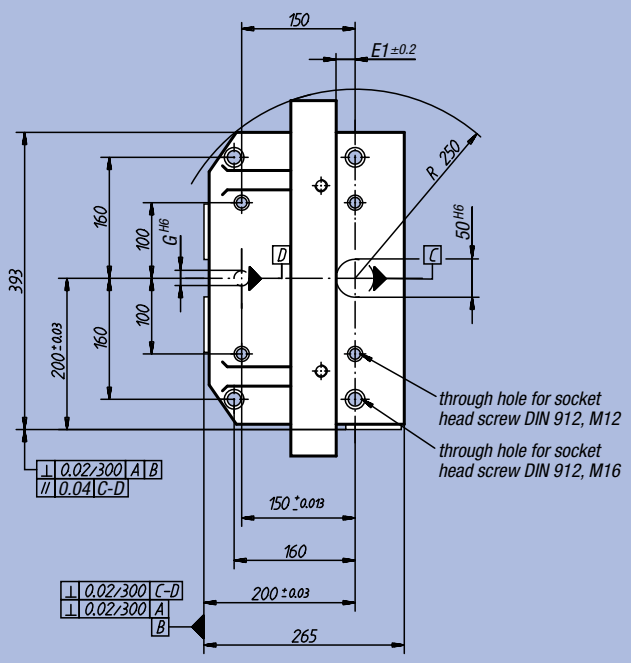

01263-005058

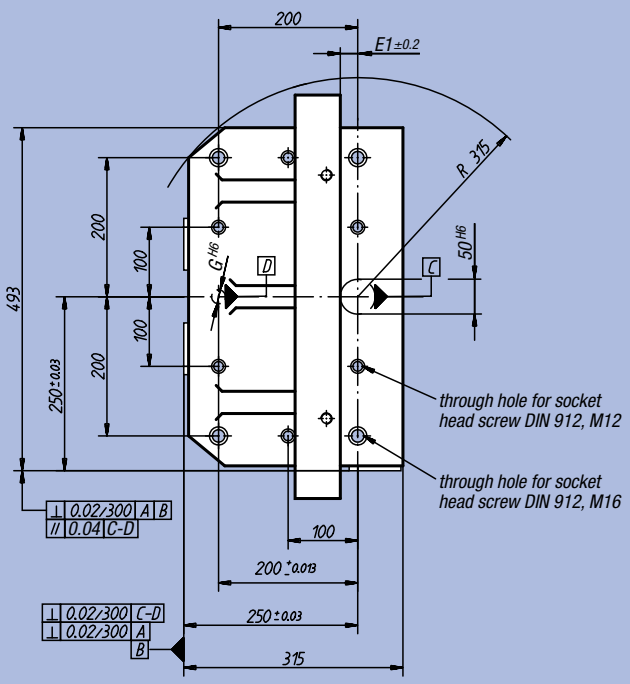

01263-006376

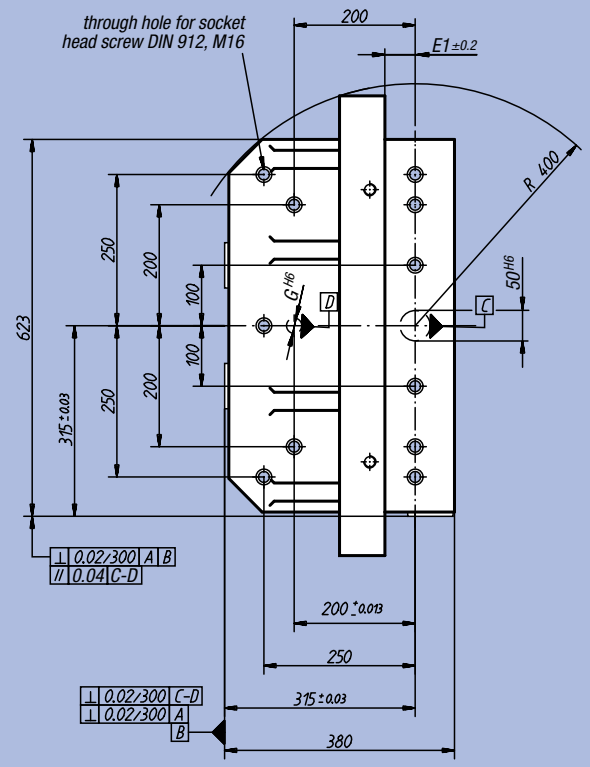

01263-008090

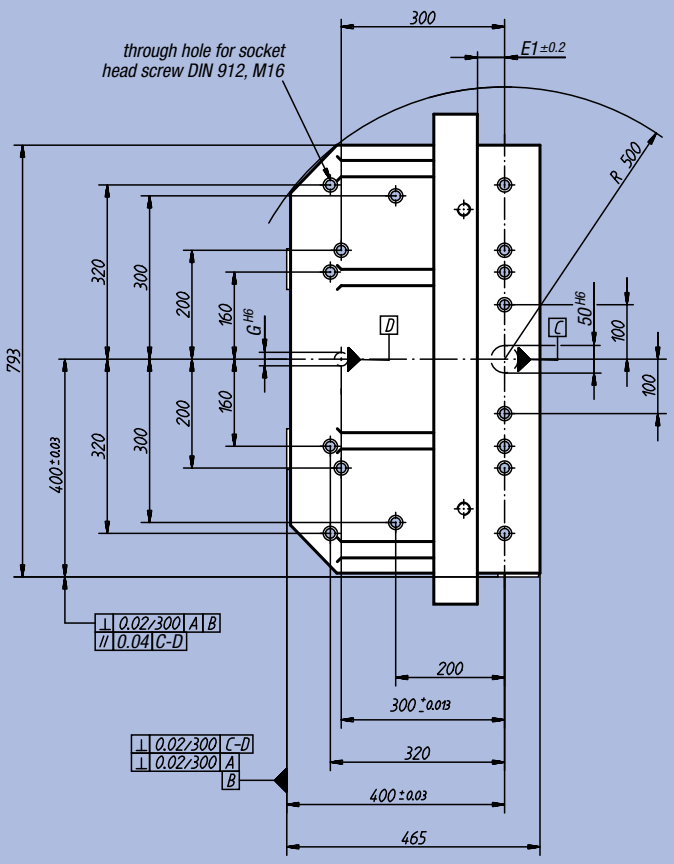

Double Angle Plates



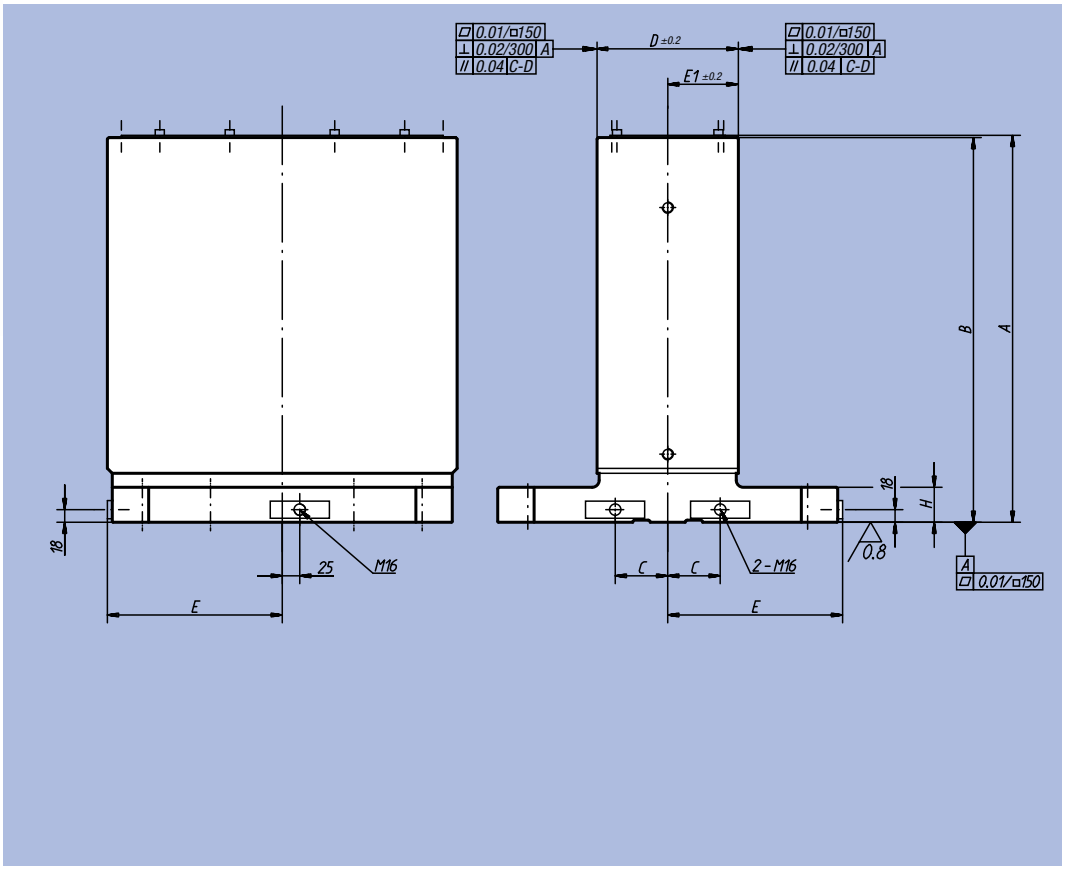

Material:
Meehanite casting GJL 300

Surface finish:
Reference surfaces precision-machined.
The clamping surfaces are pre-machined with a 0.5 mm overmeasure.

Sample Order:
nlm 01265-005020

Note:
The angle plates on both sides are sized to pallets for machine-tools pursuant to DIN 55201 and to pallets for machine tools pursuant to JIS 6337-1980.
Lifting eye bolts are supplied for transportation. A cover prevents the hollows on both sides of the angle plates from filling with chips.

Order No.	A	B	C	D	E	E1	G	H	kg
01265-005020	553	550	75	201	250	101,5	20	50	257
01265-006325	703	700	100	251	315	125,5	25	55	471
01265-008030	803	800	135	301	400	150,5	25	60	726
01265-0040151	553	550	55	151	200	75,5	20	50	202
01265-0050201	653	650	75	201	250	101,5	20	50	293
01265-0063251	803	800	100	251	315	125,5	25	55	537

Double Angle Plates

01265-0040151

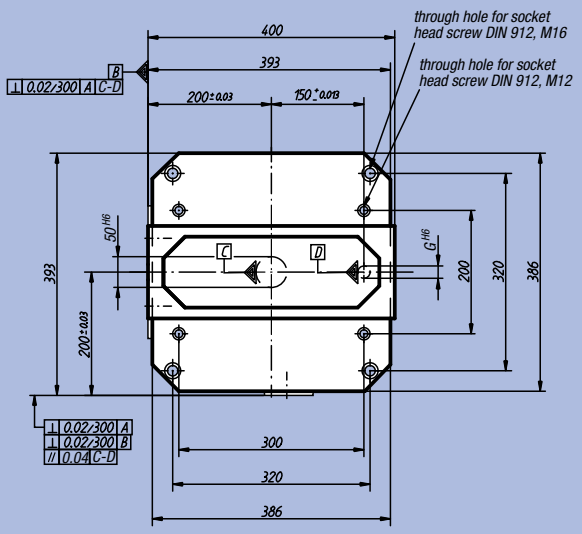

01265-005020
01265-0050201

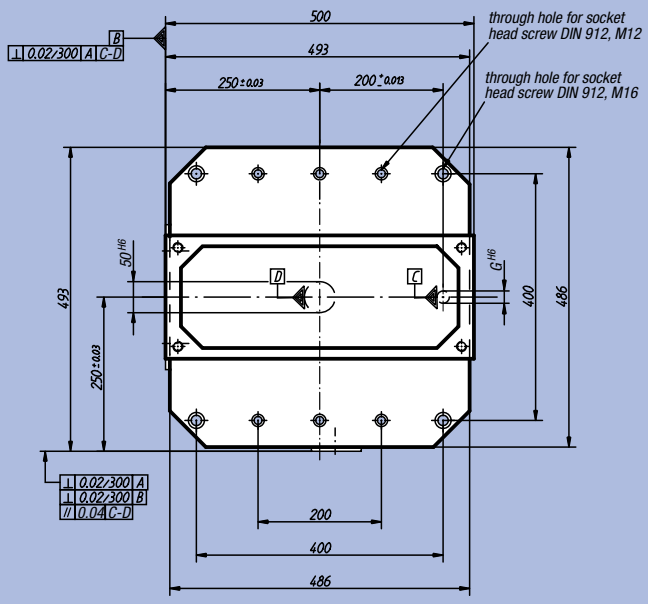

01265-006325
01265-0063251

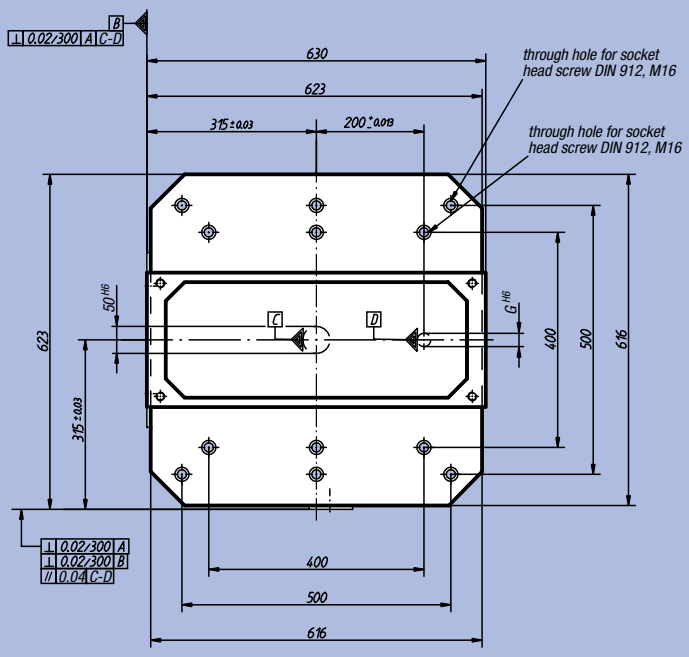

01265-008030

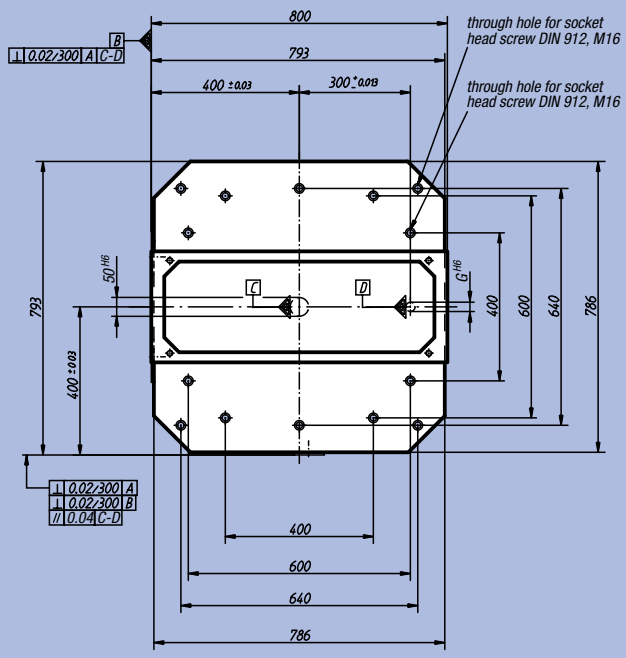

Double Angle Plates



Material:
Meehanite casting GJL 300

Surface finish:
Reference surfaces
precision-machined

Sample Order:
nlm 01267-123040

Note:
Base plates 01127 can be positioned and attached to the angle plates on both sides. This allows for a rational exchange of chucks. The angle plates are positioned on both sides using centring bolts 03110 and slot guide blocks 03240. Lifting eye bolts are supplied for transportation.

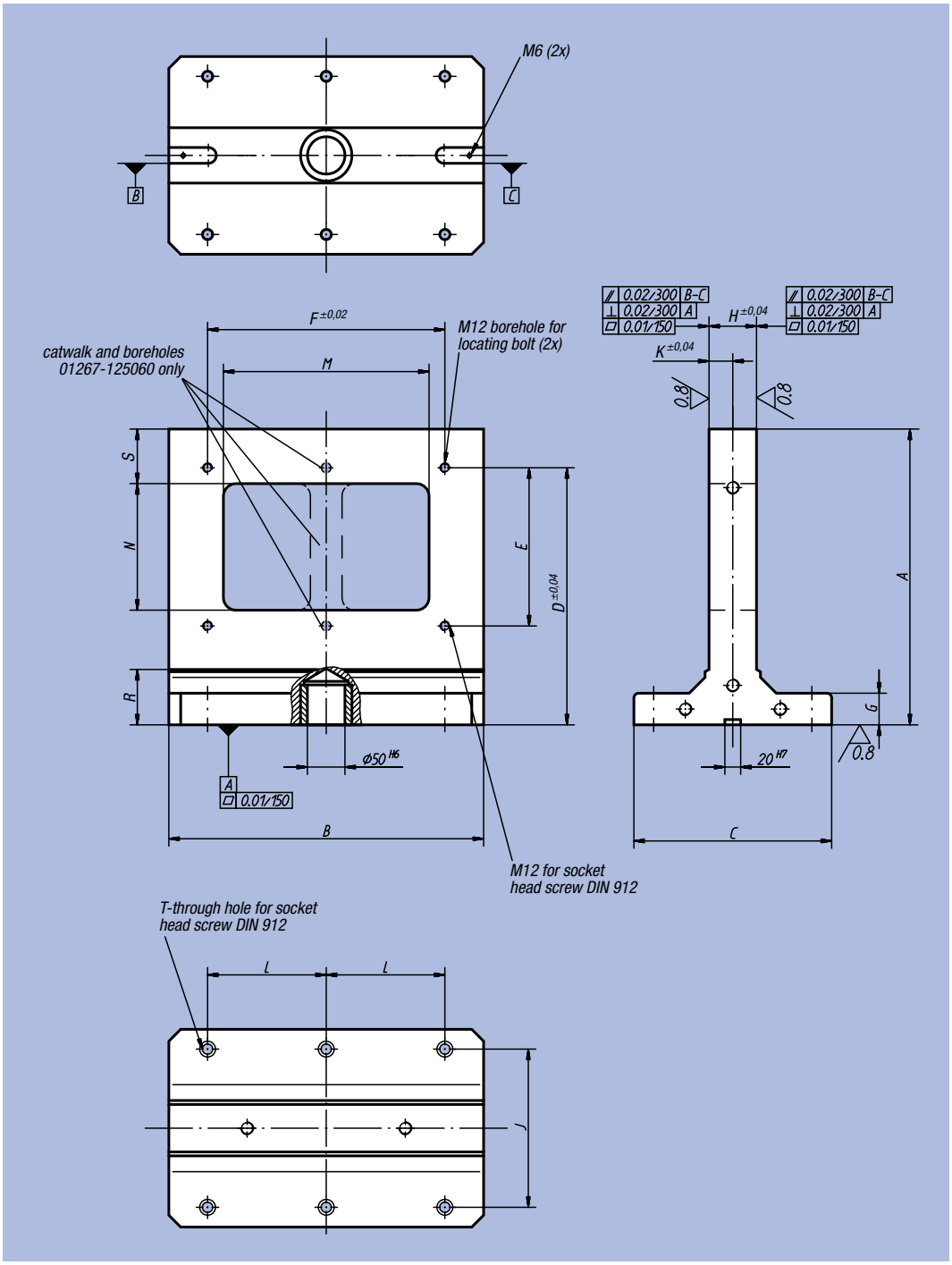

Order No.	A	B	C	D	E	F	G	H	J	K	L	M	N	R	S	T	kg
01267-123040	374	398	250	325	200	300	40	60	200	30	150	260	160	70	69	M12	64
01267-124050	474	498	250	425	300	400	40	70	200	35	200	360	260	70	69	M12	100
01267-125060	574	598	300	525	400	500	50	70	200	35	200	458	360	75	70	M16	153

Double Angle Plates

grey cast iron



Material:
Grey cast iron GJL 250

Surface finish:
Reference surfaces
precision-machined

Sample Order:
nlm 01270-320125

Note:
Lifting Eye Bolts are standard equipment. A cover prevents the cavities of the GridPlates from filling up with chips.

machined surfaces:
+0.2 mm/ +0.5 mm
raw surfaces:
±2 mm

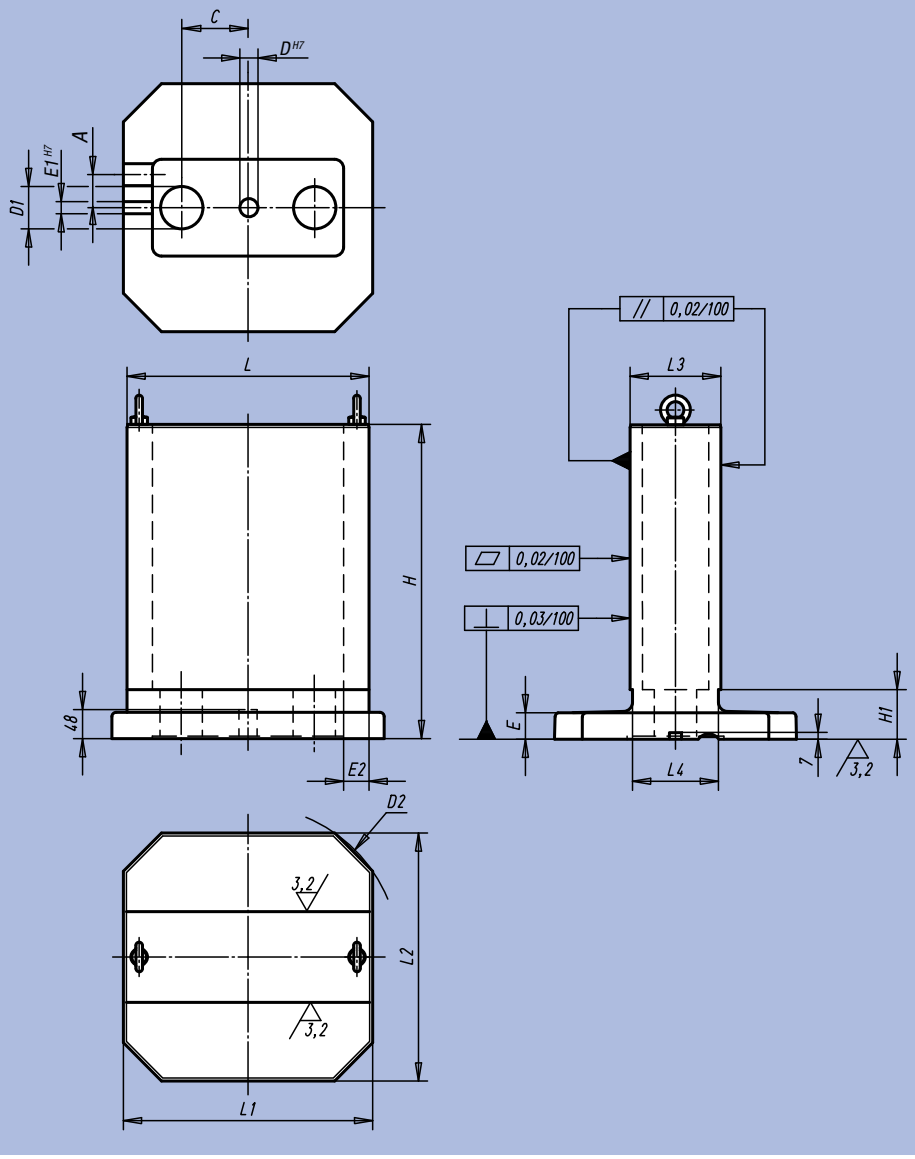

Order No.	A	C	D	D1	D2	E	E1	E2	H	H1	L	L1	L2	L3	L4	kg
01270-320125	32,5	75	30	50	400	40	20	40	378	65	320	332	330	125	115	93
01270-400150	50	120	30	70	500	40	20	42	485	80	400	412	410	150	142	170
01270-500200	55	150	30	100	630	40	20	53	603	90	500	512	510	200	190	293
01270-630250	70	180	30	140	800	50	20	57	753	100	630	642	640	250	240	510

Circular Plates

steel

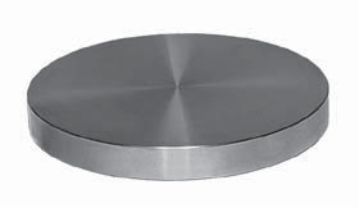

Material:
Tempered steel 1.1181
Sample Order:
nlm 01280-06X25
(Please also indicate dimension S)

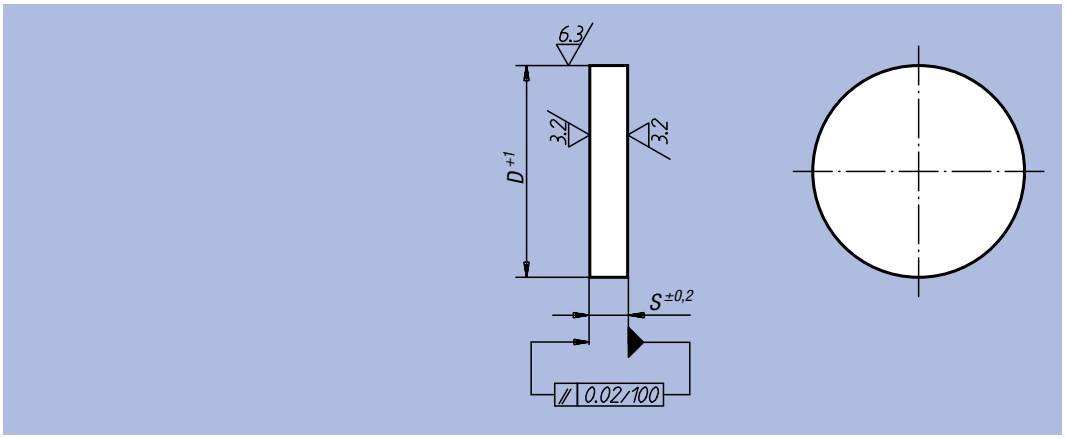

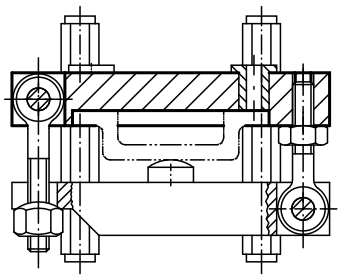

Order No.	S	D	kg, S = 10
01280-01X	16 / 20 / 25	140	1,2
01280-02X	16 / 20 / 25	180	2,0
01280-03X	16 / 20 / 25	220	3,0
01280-04X	16 / 20 / 25	280	4,8
01280-05X	20 / 25 / 32	355	7,7
01280-06X	25 / 32	400	9,8
01280-07X	25 / 32	450	12,4
01280-08X	36	500	15,3

Circular Plates

grey cast iron or aluminium

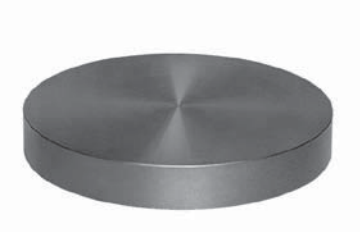

Material:
Stabilised GJL 250 grey cast iron
or EN AW-7075
Sample Order:
nlm 01320-208

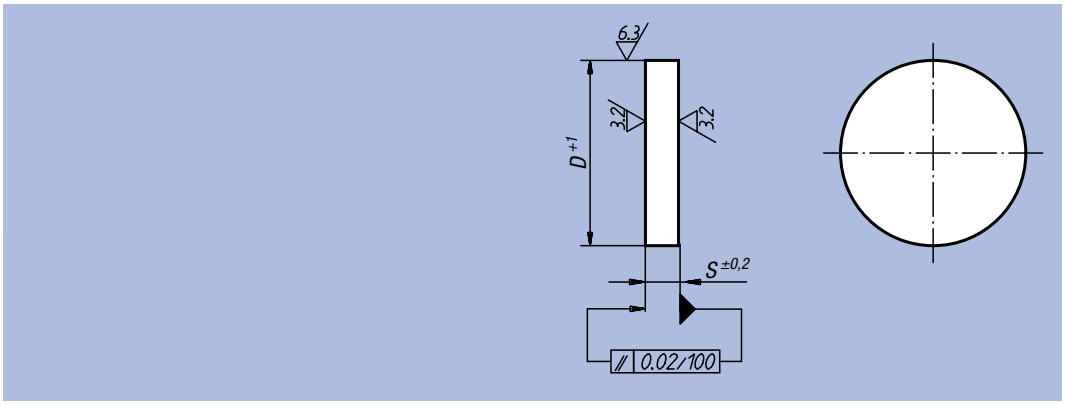

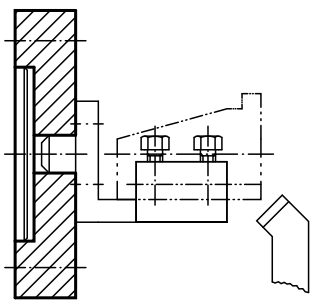

Order No. Surface finish grey cast iron	Order No. Surface finish aluminium	D	S
01320-01	01320-201	63	14
01320-02	01320-202	80	20
01320-03	01320-203	100	20
01320-04	01320-204	125	25
01320-05	01320-205	160	32
01320-06	01320-206	200	32
01320-07	01320-207	250	36
01320-08	01320-208	315	40
01320-09	01320-209	400	45
01320-10	01320-210	500	50

L-Shaped Profiles

grey cast iron or aluminium



Material:
Stabilised GJL 250 grey cast iron
or EN AW-7075

Sample Order:
nlm 01380-04X300
(Please also indicate dimension L)

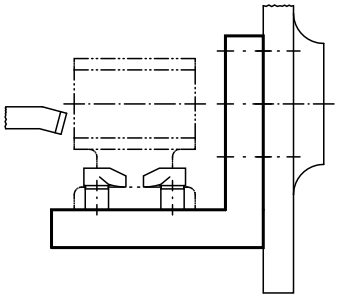

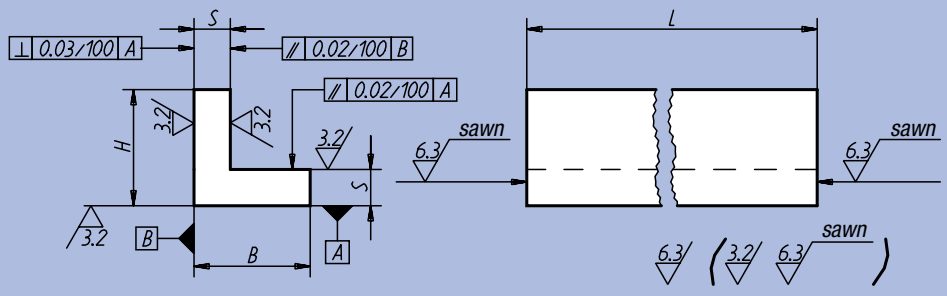

machined surfaces:
±0.25 mm
tolerances of lengths:
≤200 mm: +3/+10
from 201 mm to 590 mm: +8/+15
≥600 mm: +20/+50

Order No.	Surface finish	L = length	B	H	S	kg, L/100
01380-01X	grey cast iron	150 / 300	32	32	10	0,40
01380-02X	grey cast iron	150 / 300	40	40	12	0,60
01380-03X	grey cast iron	150 / 300	50	50	12	0,80
01380-04X	grey cast iron	150 / 300	63	63	12	1,00
01380-05X	grey cast iron	200 / 300 / 600 / 800	80	80	16	1,65
01380-06X	grey cast iron	200 / 300 / 600 / 1000	100	100	20	2,60
01380-07X	grey cast iron	200 / 300 / 600 / 1000	125	125	20	3,30
01380-08X	grey cast iron	200 / 300 / 600	160	160	25	5,30
01380-09X	grey cast iron	200 / 300 / 600	200	200	32	8,45
01380-10X	grey cast iron	300 / 600	250	250	36	10,80
01380-11X	grey cast iron	300 / 600	315	315	36	15,50
01380-201X	aluminium	150 / 300	32	32	10	0,14
01380-202X	aluminium	150 / 300	40	40	12	0,20
01380-203X	aluminium	150 / 300	50	50	12	0,30
01380-204X	aluminium	150 / 300	63	63	12	0,35
01380-205X	aluminium	200 / 300 / 600 / 800	80	80	16	0,55
01380-206X	aluminium	200 / 300 / 600 / 1000	100	100	20	0,90
01380-207X	aluminium	200 / 300 / 600 / 1000	125	125	20	1,15
01380-208X	aluminium	200 / 300 / 600	160	160	25	1,80
01380-209X	aluminium	200 / 300 / 600	200	200	32	2,90
01380-210X	aluminium	300 / 600	250	250	36	3,70
01380-211X	aluminium	300 / 600	315	315	36	5,30

Unequal L-Shaped Profiles

grey cast iron or aluminium



Material:
Stabilised GJL 250 grey cast iron
or EN AW-7075

Sample Order:
nlm 01440-03X600
(Please also indicate dimension L)

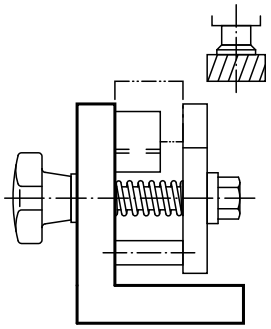

machined surfaces:
±0.25 mm
tolerances of lengths:
≤200 mm: +3/+10
from 201 mm to 590 mm: +8/+15
≥600 mm: +20/+50

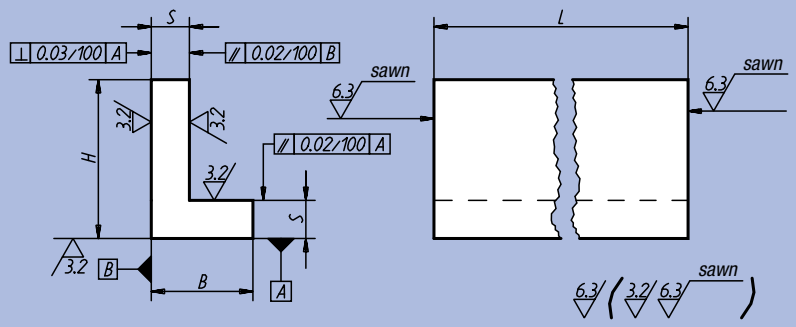

Order No. Surface finish grey cast iron	Order No. Surface finish aluminium	L = length	B	H	S
01440-01X	01440-201X	150 / 300	32	50	12
01440-02X	01440-202X	150 / 300	40	63	12
01440-03X	01440-203X	200 / 300 / 600 / 800	63	80	16
01440-04X	01440-204X	200 / 300 / 600 / 1000	80	100	20
01440-05X	01440-205X	200 / 300 / 600 / 1000	100	125	20
01440-06X	01440-206X	200 / 300 / 600	125	160	25
01440-07X	01440-207X	200 / 300 / 600	160	200	32
01440-08X	01440-208X	300 / 600	200	250	36
01440-09X	01440-209X	300 / 600	250	315	36

Cast-iron Ripped Unequal L-Shaped Profiles



Material:
Stabilised GJL 250 grey cast iron

Sample Order:
nlm 01520-04X400
(Please also indicate dimension L)

Note:
Only one rip with lengths
150 mm and 200 mm.

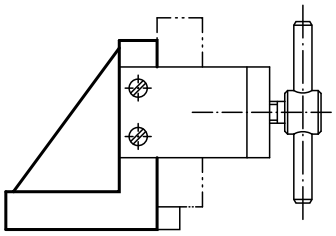

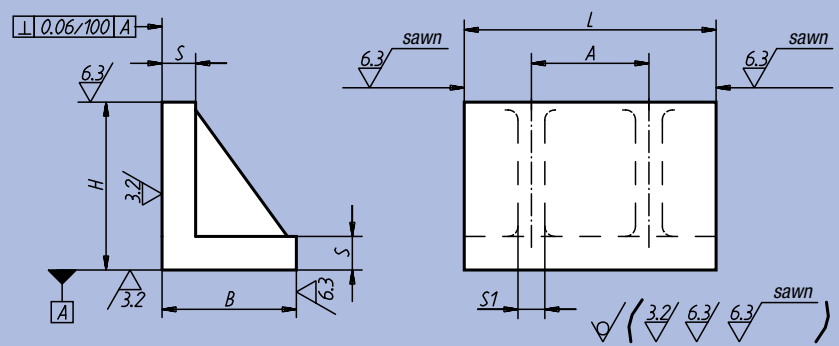

machined surfaces:
±0.25 mm
raw surfaces:
±2 mm

tolerances of lengths:
≤200 mm: +2/+5
> 200 mm: +10/+20

Order No.	L = length	B	H	S	S1	A	kg, L/100
01520-01X	150 / 300	80	100	20	16	160	2,50
01520-02X	150 / 300	100	125	22	18	160	3,70
01520-03X	150 / 300	125	160	25	20	160	5,50
01520-04X	200 / 400	160	200	32	22	200	8,45
01520-05X	200 / 400	200	250	36	25	200	12,50

Rounded H-Shaped profile

grey cast iron or aluminium



Material:
Stabilised GJL 250 grey cast iron or EN AW-7075

Sample Order:
nlm 01560-04X300
(Please also indicate dimension L)

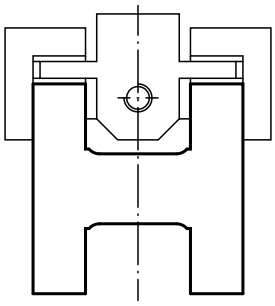

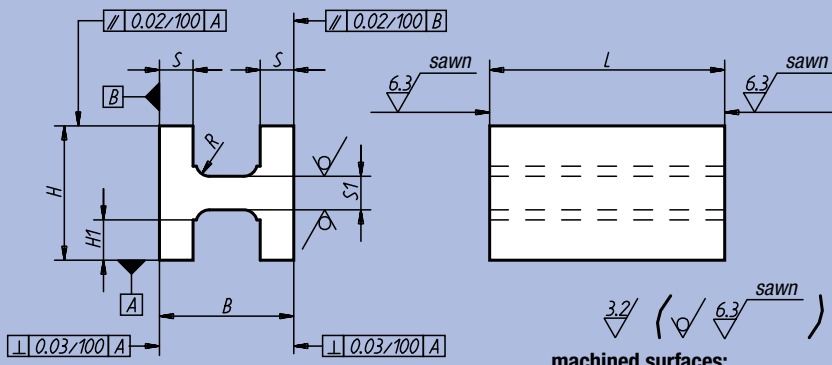

machined surfaces:
±0.25 mm
raw surfaces:
±2 mm
tolerances of lengths:
≤200 mm: +3/+10
from 201 mm to 590 mm: +8/+15
≥600 mm: +20/+50

Order No. Surface finish grey cast iron	Order No. Surface finish aluminium	L = length	B	H	H1	S	S1	R
01560-03X	01560-203X	600	80	80	25	16	21	6
01560-04X	01560-204X	300 / 600	100	100	32	20	26	8
01560-05X	01560-205X	200 / 300 / 600	125	125	45	20	26	8

T-Shaped Profiles

grey cast iron or aluminium



Material:
Stabilised GJL 250 grey cast iron or EN AW-7075

Sample Order:
nlm 01580-05X300
(Please also indicate dimension L)

On request:
Lengths 800 mm and 1000 mm en grey cast iron.

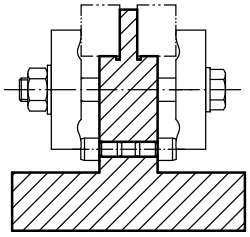

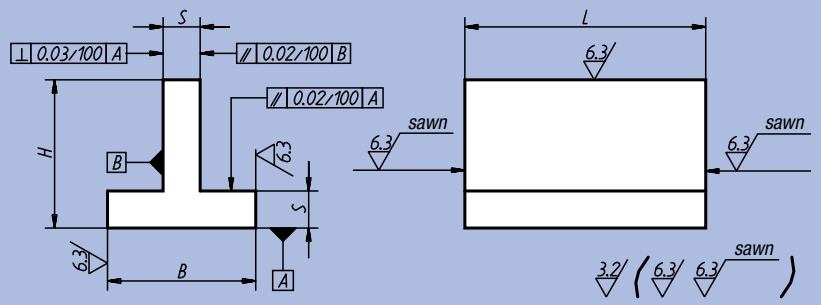

machined surfaces:
±0.25 mm
raw surfaces:
±2 mm
tolerances of lengths:
≤200 mm: +3/+10
from 201 mm to 590 mm: +8/+15
≥600 mm: +20/+50

Order No. Surface finish grey cast iron	Order No. Surface finish aluminium	L = length	B	H	S
01580-01X	01580-201X	300	40	40	10
01580-02X	01580-202X	150 / 300	63	63	12
01580-03X	01580-203X	300 / 600 / 800	80	80	16
01580-04X	01580-204X	300 / 600 / 1000	100	100	20
01580-05X	01580-205X	300 / 600 / 1000	125	125	20
01580-06X	01580-206X	300 / 600	160	160	25
01580-07X	01580-207X	300 / 600	200	200	32

V-Shaped Profiles

grey cast iron or aluminium



Material:
Stabilised GJL 250 grey cast iron
or EN AW-7075

Sample Order:
nlm 01640-05X200
(Please also indicate dimension L)

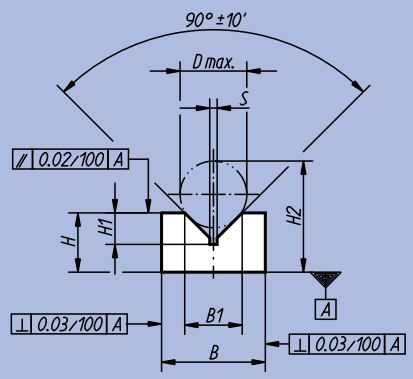

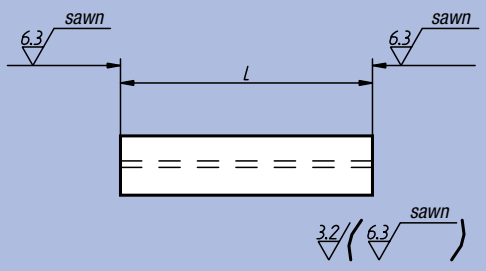

machined surfaces:
±0.25 mm

tolerances of lengths:
≤200 mm: +3/+10
from 201 mm to 590 mm: +8/+15
≥600 mm: +20/+50

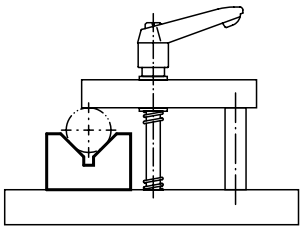

Order No. Surface finish grey cast iron	Order No. Surface finish aluminium	L = length	B	B1	H	H1	H2	D max.	S
01640-01X	01640-201X	100 / 200	25	15,5	16	8,5	30	18	2
01640-02X	01640-202X	100 / 200	36	21,9	20	11	38	24	2
01640-03X	01640-203X	100 / 200	40	26	25	13,5	47	29	2,5
01640-04X	01640-204X	200 / 300 / 600	50	31,7	36	17	66	38	2,5
01640-05X	01640-205X	200 / 300 / 600	70	50	50	26	95	58	3
01640-06X	01640-206X	200 / 300 / 600	100	79,3	70	41	139	90	4

Wide V-Shaped Profiles

grey cast iron



Material:
Stabilised GJL 250 grey cast iron

Sample Order:
nlm 01660-04X300
(Please also indicate dimension L)

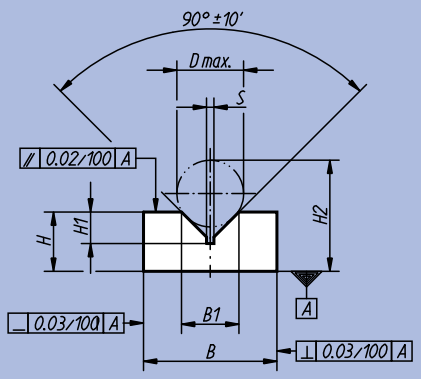

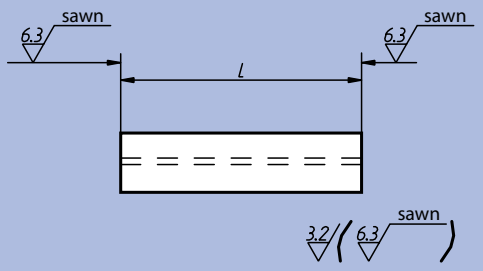

machined surfaces:
±0.25 mm

tolerances of lengths:
≤200 mm: +3/+10
from 201 mm to 590 mm: +8/+15
≥600 mm: +20/+50

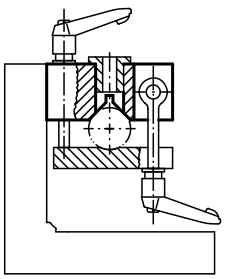

Order No.	L = length	B	B1	H	H1	H2	D max.	S
01660-01X	100 / 200	36	15,5	16	8,5	30	18	2
01660-02X	100 / 200	50	21,9	25	11	43	24	2
01660-03X	100 / 200	63	26	32	13,5	54	29	2,5
01660-04X	200 / 300 / 600	100	31,7	40	17	70	38	2,5
01660-05X	200 / 300 / 600	125	50	56	26	101	58	3
01660-06X	200 / 300 / 600	160	79,3	80	41	149	90	4

U-Shaped Profiles

grey cast iron or aluminium



Material:
Stabilised GJL 250 grey cast iron
or EN AW-7075

Sample Order:
nlm 01680-06X300
(Please also indicate dimension L)

On request:
Lengths 800 mm and 1000 mm
in grey cast iron.

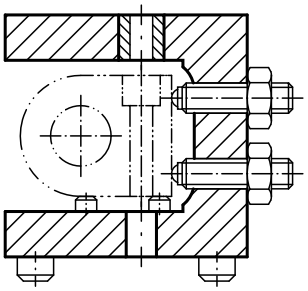

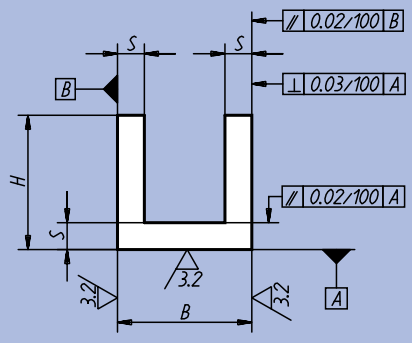

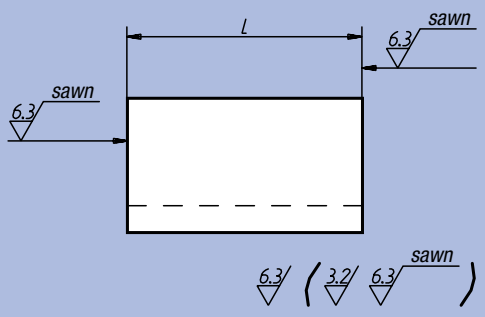

machined surfaces:
±0.25 mm
tolerances of lengths:
≤200 mm: +3/+10
from 201 mm to 590 mm: +8/+15
≥600 mm: +20/+50

Order No.	Surface finish	L = length	B	H	S	kg, L/100
01680-01X	grey cast iron	150 / 300	32	32	8	0,47
01680-02X	grey cast iron	150 / 300	40	40	10	0,73
01680-03X	grey cast iron	150 / 300 / 600	63	63	12	1,47
01680-04X	grey cast iron	200 / 300 / 600 / 800	80	80	16	2,50
01680-05X	grey cast iron	200 / 300 / 600 / 1000	100	100	20	3,75
01680-06X	grey cast iron	200 / 300 / 600 / 1000	125	125	20	4,85
01680-07X	grey cast iron	200 / 300 / 600	160	160	25	7,75
01680-08X	grey cast iron	200 / 300 / 600	200	200	32	12,50
01680-09X	grey cast iron	300 / 600	250	250	36	17,60
01680-10X	grey cast iron	300 / 600	250	200	36	15,00
01680-11X	grey cast iron	300 / 600	315	200	36	16,67
01680-201X	aluminium	150 / 300	32	32	8	0,16
01680-202X	aluminium	150 / 300	40	40	10	0,25
01680-203X	aluminium	150 / 300 / 600	63	63	12	0,50
01680-204X	aluminium	200 / 300 / 600 / 800	80	80	16	0,85
01680-205X	aluminium	200 / 300 / 600 / 1000	100	100	20	1,30
01680-206X	aluminium	200 / 300 / 600 / 1000	125	125	20	1,67
01680-207X	aluminium	200 / 300 / 600	160	160	25	2,67
01680-208X	aluminium	200 / 300 / 600	200	200	32	4,30
01680-209X	aluminium	300 / 600	250	250	36	6,05
01680-210X	aluminium	300 / 600	250	200	36	5,15
01680-211X	aluminium	300 / 600	315	200	36	5,73

Square Hollow Profiles

grey cast iron



Material:
Stabilised GJL 250 grey cast iron
Sample Order:
nlm 01740-06X200
(Please also indicate dimension L)

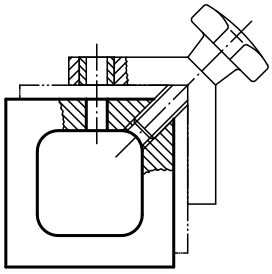

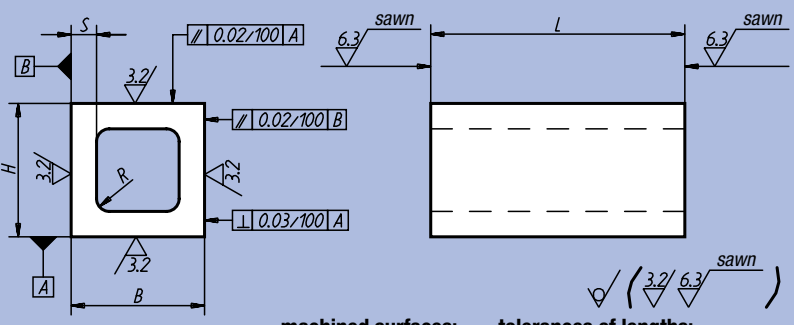

machined surfaces:
±0.25 mm
raw surfaces:
±2 mm

tolerances of lengths:
≤200 mm: +3/+10
from 201 mm to 590 mm: +8/+15
≥600 mm: +20/+50

Order No.	L = length	B	H	≈ S	R	kg, L/100
01740-04X	100 / 200	63	63	12	6	1,80
01740-05X	200 / 400	80	80	18	8	3,75
01740-06X	200 / 400	100	100	20	10	4,70
01740-07X	200 / 400 / 600	125	125	22	12	6,65
01740-08X	200 / 300 / 600	160	160	25	16	10,00
01740-09X	200 / 300 / 600	200	200	28	20	14,45
01740-12X	600	250	250	36	20	22,80
01740-15X	600	315	315	56	20	42,50

Rectangular Hollow Profiles

grey cast iron



Material:
Stabilised GJL 250 grey cast iron
Sample Order:
nlm 01760-04X300
(Please also indicate dimension L)

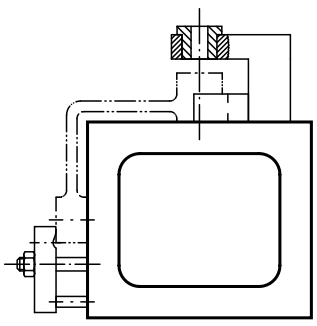

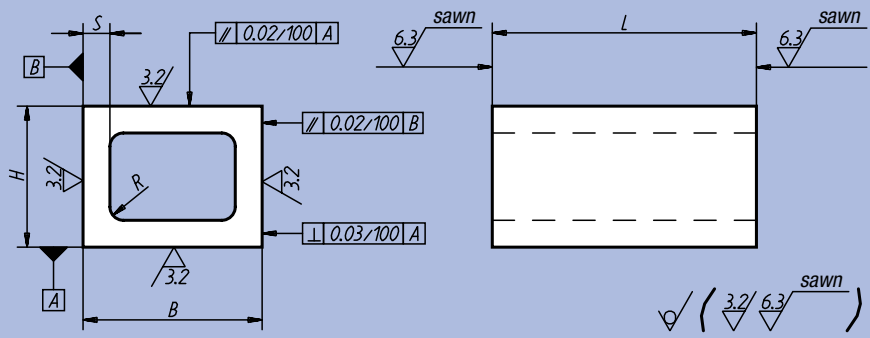

machined surfaces:
±0.25 mm
raw surfaces:
±2 mm

tolerances of lengths:
≤200 mm: +3/+10
from 201 mm to 590 mm: +8/+15
≥600 mm: +20/+50

Order No.	L = length	B	H	≈ S	R	kg, L/100
01760-01X	100 / 200	80	63	12	6	2,10
01760-02X	200 / 400	100	80	16	8	3,50
01760-03X	200 / 300 / 600	160	100	22	10	7,25
01760-04X	200 / 300 / 600	200	160	25	16	11,35
01760-05X	300 / 600	250	200	28	20	16,17

60° Angle Profiles

grey cast iron

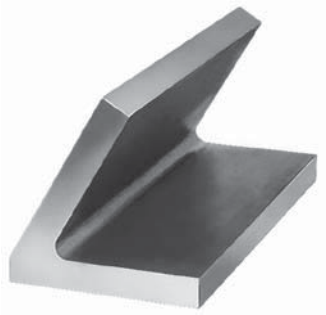

Material:
Stabilised GJL 250 grey cast iron
Sample Order:
nlm 01780-02X300
(Please also indicate dimension L)

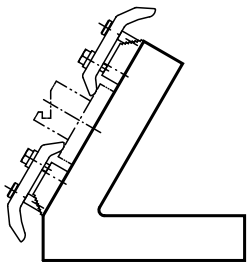

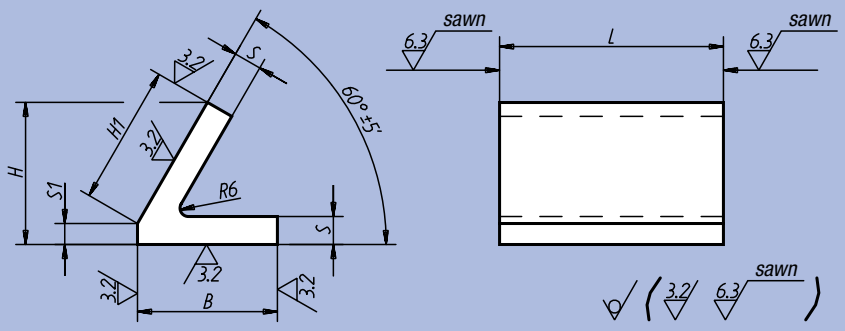

machined surfaces:
±0.25 mm
raw surfaces:
±2 mm
tolerances of lengths:
≤200 mm: +3/+10
from 201 mm to 590 mm: +8/+15
≥600 mm: +20/+50

Order No.	L = length	B	H	H1	S	S1	kg, L/100
01780-02X	300 / 600	100	101,5	100	20	15	2,9
01780-05X	300 / 600	200	197,5	200	32	24	8,8

45° Angle Profiles

grey cast iron



Material:
Stabilised GJL 250 grey cast iron
Sample Order:
nlm 01820-05X300
(Please also indicate dimension L)

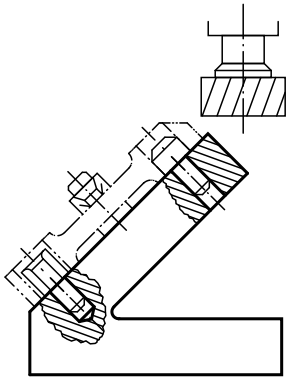

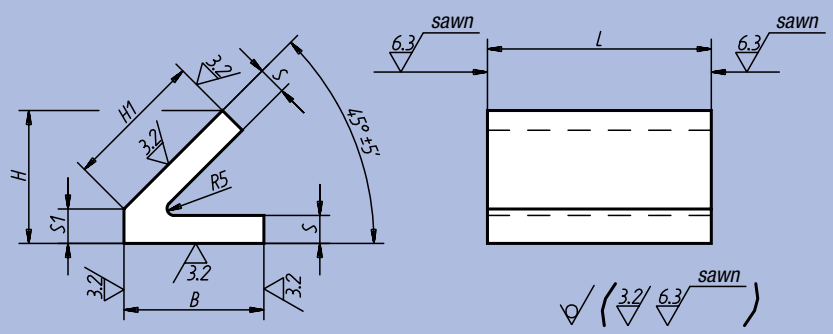

machined surfaces:
±0.25 mm
raw surfaces:
±2 mm
tolerances of lengths:
≤200 mm: +3/+10
from 201 mm to 590 mm: +8/+15
≥600 mm: +20/+50

Order No.	L = length	B	H	H1	S	S1	kg, L/100
01820-02X	300 / 600	100	95	100	20	24	2,85
01820-05X	300 / 600	200	181	200	32	40	9,10

Four Face Angle Plates



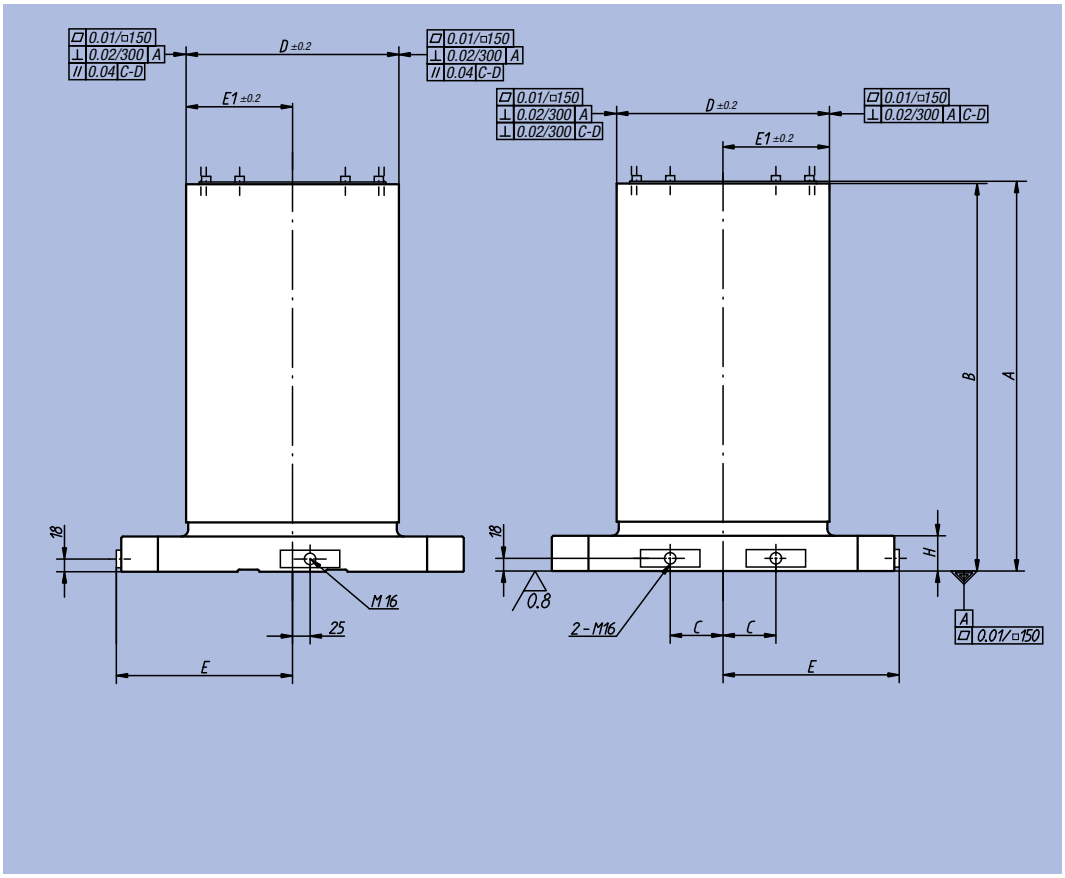

Material:
Meehanite casting GJL 300

Surface finish:
Reference surfaces
precision machined,
the angle plates are pre-machined
with a 0.5 mm overmeasure

Sample Order:
nlm 01850-008050

Note:
The angle plates are sized to pallets for machine tools pursuant to DIN 55201 and to pallets for machine tools pursuant to JIS 6337-1980.
Lifting eyebolts are supplied for transportation. A cover prevents the hollow spaces in the angle plates from filling with chips.

Order No.	A	B	C	D	E	E1	G	H	kg
01850-005030	553	550	75	301	250	150,5	20	50	237
01850-006335	703	700	100	351	315	175,5	25	55	389
01850-008050	803	800	135	501	400	250,5	25	60	744
01850-0040251	553	550	55	251	251	125,5	20	50	176
01850-0050301	653	650	75	301	250	150,5	20	50	268
01850-0063351	803	800	100	351	315	175,5	25	55	425

Four Face Angle Plates

01850-0040251

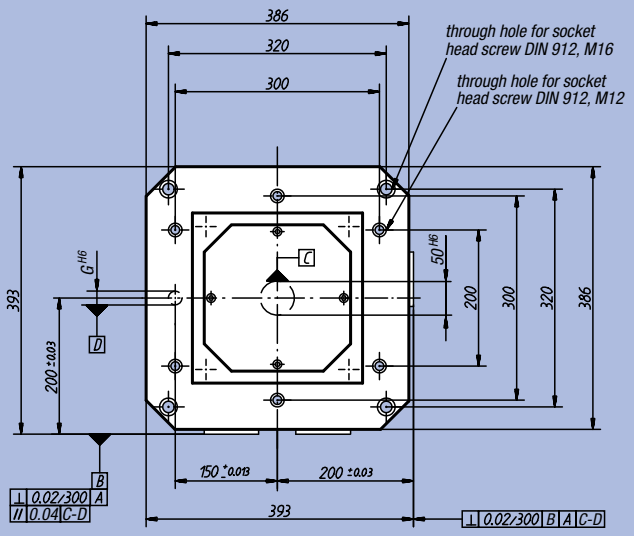

01850-005030
01850-0050301

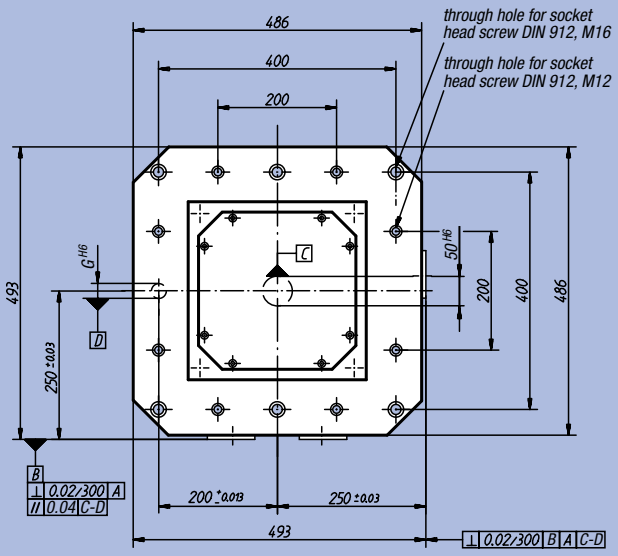

01850-006335
01850-0063351

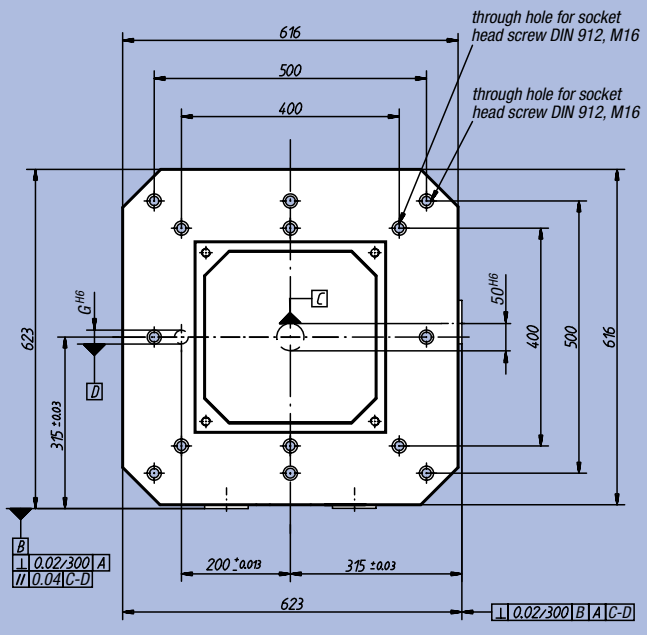

01850-008050

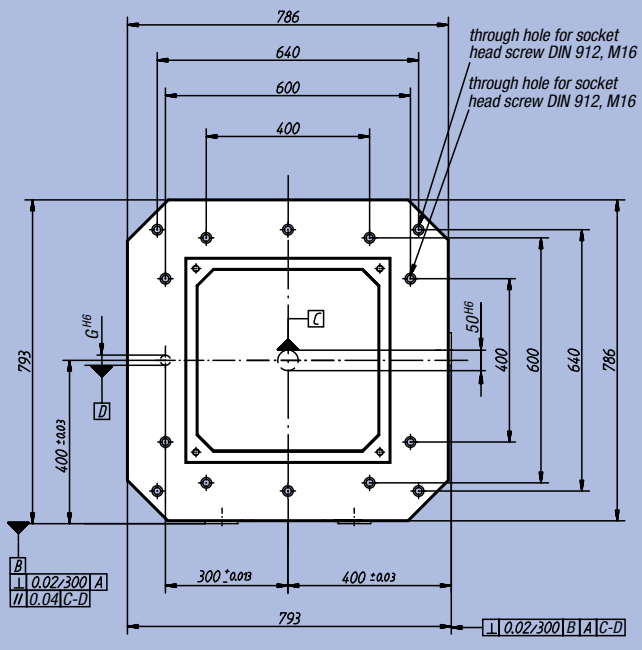

Four Face Angle Plates

grey cast iron



Material:
Grey cast iron GJL 250

Surface finish:
Reference surfaces
precision-machined

Sample Order:
nlm 01852-320180

Note:
Lifting Eye Bolts are standard equipment.
A cover prevents the cavities of the Grid Plates from filling up with chips.

machined surfaces:
+0.2 mm/ +0.5 mm
raw surfaces:
±2 mm

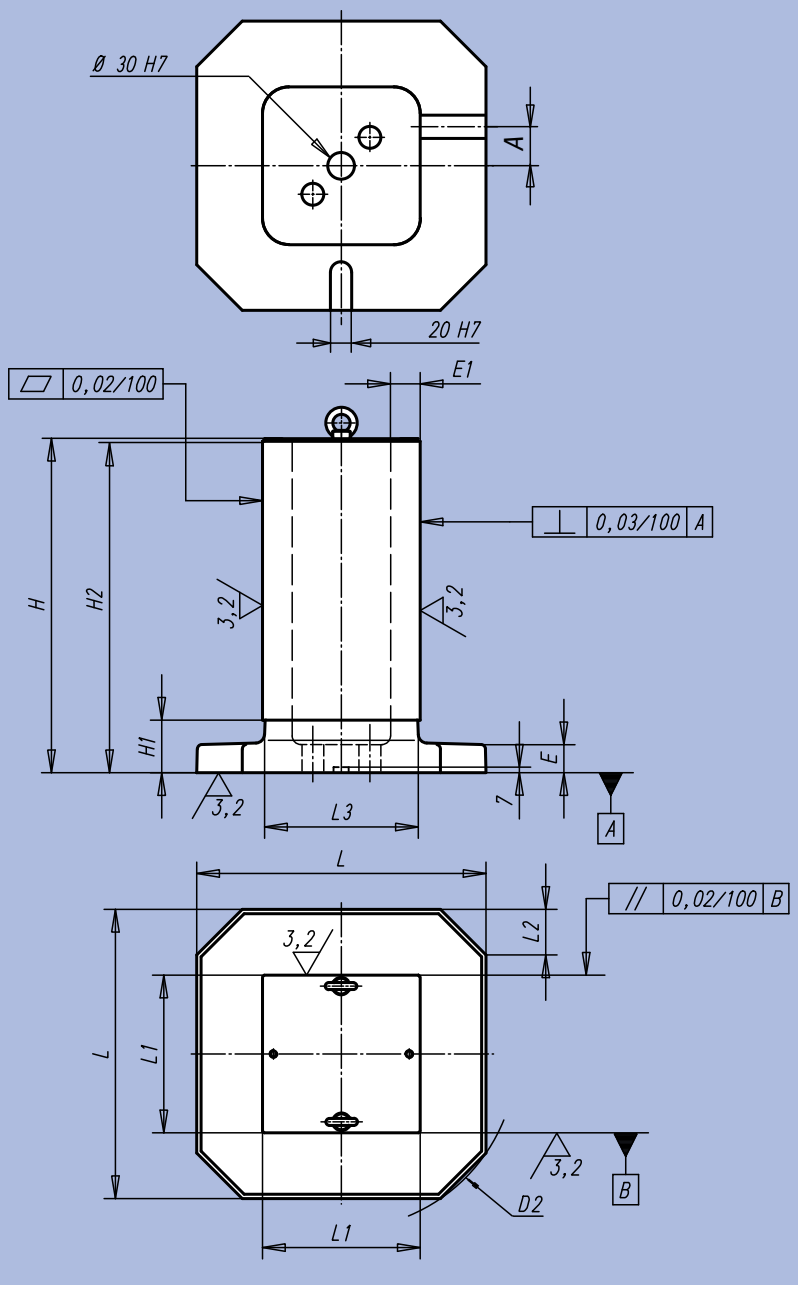

Order No.	A	D2	E	E1	H	H1	H2	L	L1	L2	L3	kg
01852-320180	32,5	400	32	25	381	80	378	330	180	52	174	62
01852-400270	50	500	32	32	485	60	482	410	270	62	262	153
01852-500320	55	630	40	40	603	100	600	510	320	70	312	270
01852-630360	70	800	40	45	753	100	750	640	360	80	350	426
01852-800500	80	1000	50	50	903	110	900	810	500	110	490	894

02000

Pendelauflagen
Füße
Spannunterlagen
Abstützelemente



Pendelauflagen



Werkstoff:
Körper Vergütungsstahl,
Kugel Kugellagerstahl 1.2067.
Form M: Kugel Vergütungsstahl, mit Hartmetalleinsatz.

Ausführung:
Körper vergütet und phosphatiert.
Kugel gehärtet.
Form M Kugel vergütet.

Bestellbeispiel:
nlm 02000-120

Hinweis:
Die Pendelauflagen dienen als Anschläge, Auflagen und Druckstücke im Vorrichtungsbau.
Die Riffelspitzen aus Hartmetall sind eingelötet.

Kugel gegen Verdrehen gesichert.

* Gilt nur, wenn die Mindest-Bohrungstiefe eingehalten ist.

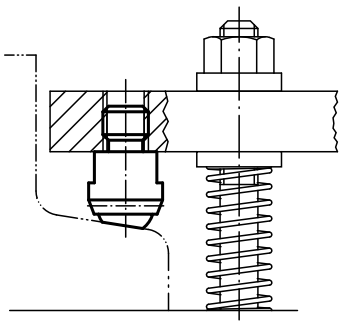

Form C
mit Außengewinde,
Kugel abgeflacht, plan

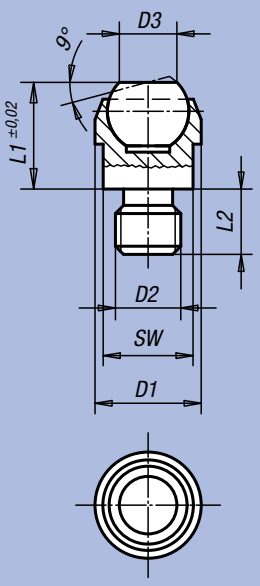

Form F
mit Außengewinde,
Kugel abgeflacht,
mit Riffelung

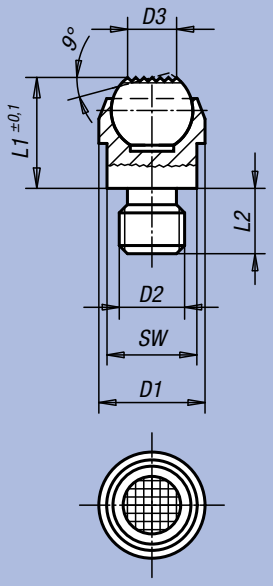

Form M
mit Außengewinde,
Kugel abgeflacht, mit
Riffelung aus Hartmetall

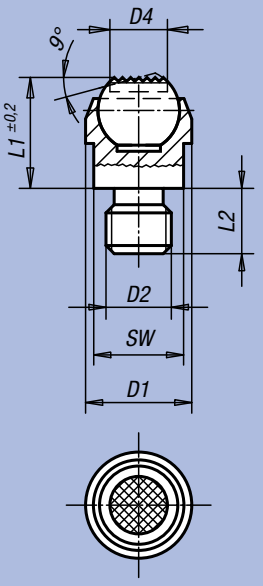

Form G
mit Passungsaufnahme,
Kugel abgeflacht, plan

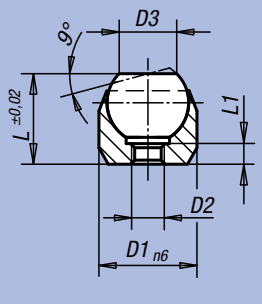

Form J
mit Passungsaufnahme,
Kugel abgeflacht, mit Riffelung

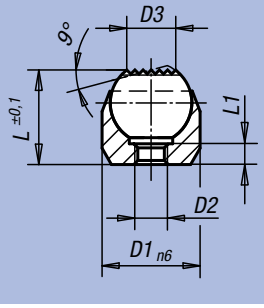

Pendelauflagen

Bestellnummer	Form	D1	D2	D3	D4	L1	L2	Kugel-Ø	SW	Belastbarkeit max. kN (nur bei statischer Belastung)	kg
02000-108	C	13	M8	7,2	-	13	8	10	11	10	0,013
02000-110	C	20	M10	10,5	-	18	10	16	17	25	0,040
02000-112	C	20	M12	10,5	-	18	12	16	17	25	0,040
02000-116	C	30	M16	20	-	27	16	25	27	90	0,100
02000-120	C	50	M20	34,5	-	35	20	40	41	165	0,520
02000-308	F	13	M8	7,2	-	13	8	10	11	10	0,013
02000-310	F	20	M10	10,5	-	18	10	16	17	25	0,040
02000-312	F	20	M12	10,5	-	18	12	16	17	25	0,040
02000-316	F	30	M16	20	-	27	16	25	27	90	0,100
02000-320	F	50	M20	34,5	-	35	20	40	41	165	0,520
02000-908	M	13	M8	-	7,7	13,3	8	10	11	10	0,013
02000-910	M	20	M10	-	12	18	10	16	17	25	0,040
02000-912	M	20	M12	-	12	18	12	16	17	25	0,040

Bestellnummer	Form	D1	D2	D3	L	L1	Kugel-Ø	Aufnahmebohrung	Belastbarkeit max. kN (nur bei statischer Belastung)	kg
02000-403	G	12	M3	7,2	11	3,5	10	ø 12 H7 x 6 min.	10*	0,010
02000-404	G	18	M4	10,5	17	4,4	16	ø 18 H7 x 8 min.	25*	0,030
02000-405	G	28	M5	20	25	6,3	25	ø 28 H7 x 13 min.	90*	0,080
02000-603	J	12	M3	7,2	11	3,5	10	ø 12 H7 x 6 min.	10*	0,010
02000-604	J	18	M4	10,5	17	4,4	16	ø 18 H7 x 8 min.	25*	0,030
02000-605	J	28	M5	20	25	6,3	25	ø 28 H7 x 13 min.	90*	0,080

Pendelauflagen

Neigungswinkel 20°



Werkstoff:
Körper Stahl. Kugel rost- und säurebeständiger Stahl.
Form M mit Hartmetalleinsatz.

Ausführung:
Körper brüniert, Kugel blank.

Bestellbeispiel:
nlm 02001-108

Hinweis:
Die Pendelauflagen werden zum Stützen und Spannen von unbearbeiteten und bearbeiteten Werkstücken verwendet.
Darüber hinaus dienen sie als Anschläge, Auflagen und Druckstücke im Vorrichtungs- und Werkzeugbau.
Patent angemeldet.
In das Gewinde D3 können Gewindestifte oder Stiftschrauben eingedreht und verklebt werden. So erhält man auf einfache Art eine Pendelauflage mit Außengewinde.

Kugel gegen Verdrehen gesichert.

Vorteile:
- Die Pendelauflage ist um 20° schwenkbar.
- Aufnahme großer Belastungskräfte.
- Der eingebaute O-Ring hält Schmutz und Fremdteilchen zurück. Somit ist eine sichere Funktion gewährleistet.

Form C
Kugel abgeflacht, plan

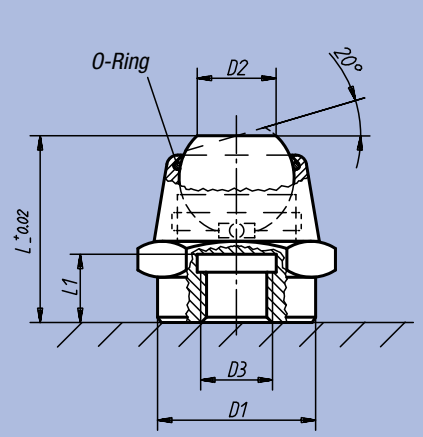

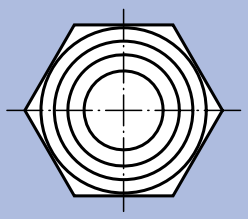

Form M
Kugel abgeflacht,
mit Riffelung aus Hartmetall

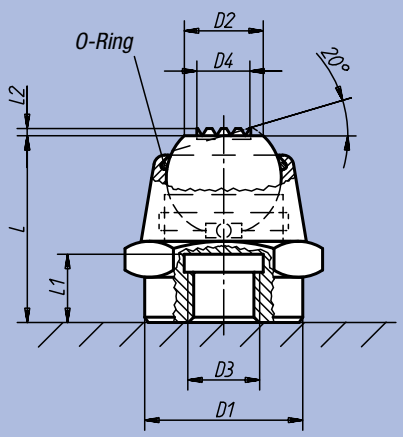

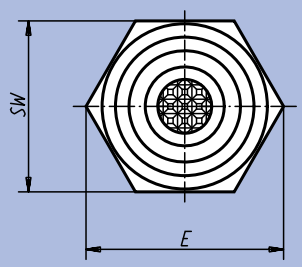

Ausführung:
02001-1061
02001-1101
02001-1161

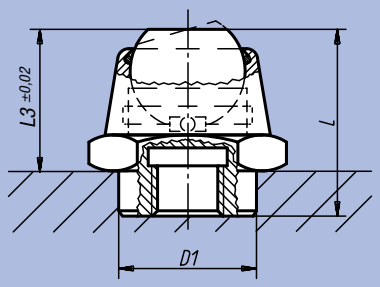

Ausführung:
02001-9061
02001-9101
02001-9161

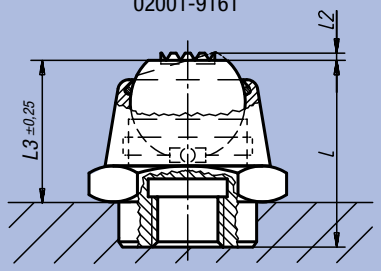

Bestellnummer Form C	Bestellnummer Form M	D1	D2	D3	D4	L	L1	L2	L3	E	SW	Kugel-Ø	Belastbarkeit max. kN (nur bei statischer Belastung)
02001-1061	02001-9061	12	7	M6	5	17,5	6	0,4	12,5	19,6	17	10	14
02001-106	02001-906	16	7	M6	5	17,5	6	0,4	-	19,6	17	10	14
02001-108	02001-908	22	11	M8	7,5	26	9	0,8	-	27,7	24	16	34
02001-1101	02001-9101	18	11	M10	7,5	26	9	0,8	20	27,7	24	16	34
02001-110	02001-910	22	11	M10	7,5	26	9	0,8	-	27,7	24	16	34
02001-112	02001-912	22	11	M12	7,5	26	9	0,8	-	27,7	24	16	34
02001-1161	02001-9161	26	18	M16	13	40	15	0,6	30	41,6	36	25	90
02001-116	02001-916	34	18	M16	13	40	15	0,6	-	41,6	36	25	90
02001-120	02001-920	34	18	M20	13	40	15	0,6	-	41,6	36	25	90

Pendelauflagen

mit O-Ring



Werkstoff:
Körper Vergütungsstahl.
Kugel Werkzeugstahl.
Form K Delrin.

Ausführung:
Körper vergütet, Kugel gehärtet, brüniert.
Delrinkugel weiß.

Bestellbeispiel:
nlm 02002-704X012

Hinweis:
Die Pendelauflagen werden zum Stützen und Spannen von unbearbeiteten und bearbeiteten Werkstücken verwendet.
Darüber hinaus dienen sie als Anschläge, Auflagen und Druckstücke im Vorrichtungs- und Werkzeugbau.

Kugel gegen Verdrehen gesichert.

Vorteile:
- Der eingebaute O-Ring hält die Kugel und verhindert das Eindringen von Schmutz und Fremdteilchen.
- Dadurch wird eine gleichmäßige Bewegung gewährleistet.

Form C
Stahlkugel abgeflacht, plan

Form K
Delrinkugel abgeflacht, plan

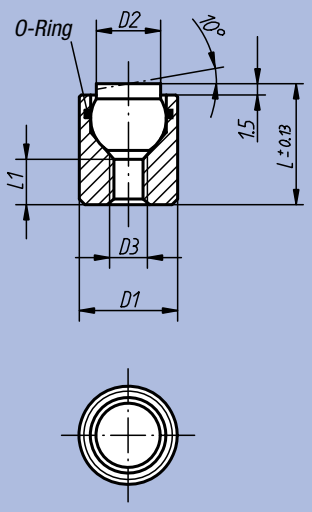

Form F
Stahlkugel abgeflacht, mit Riffelung

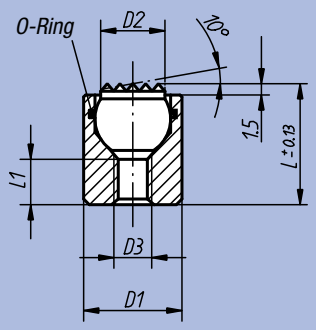

Bestellnummer	Form	D1	D2	D3	L	L1	Kugel-Ø	Belastbarkeit max. kN (nur bei statischer Belastung)	kg
02002-104X012	C	10	6	M4	12	4,5	7	12	0,006
02002-104X025	C	10	6	M4	25	12	7	12	0,013
02002-105X016	C	13	8,5	M5	16	5	10	20	0,015
02002-105X025	C	13	8,5	M5	25	12	10	20	0,023
02002-304X012	F	10	6	M4	12	4,5	7	12	0,006
02002-304X025	F	10	6	M4	25	12	7	12	0,013
02002-305X016	F	13	8,5	M5	16	5	10	20	0,014
02002-305X025	F	13	8,5	M5	25	12	10	20	0,022
02002-704X012	K	10	6	M4	12	4,5	7	2	0,005
02002-704X025	K	10	6	M4	25	12	7	2	0,012
02002-705X016	K	13	8,5	M5	16	5	10	4	0,011
02002-705X025	K	13	8,5	M5	25	12	10	4	0,019

Pendelauflagen

mit O-Ring und auswechselbaren Einsätzen



Werkstoff, Ausführung:
Körper Vergütungsstahl,
vergütet und brüniert.
Kugel rost- und säurebeständiger Stahl, gehärtet und blank.
Einsatz:
Form C Werkzeugstahl,
gehärtet und brüniert.
Form F Werkzeugstahl,
gehärtet und brüniert.
Form M Werkzeugstahl mit Hartmetallriffelung, brüniert.
Form K Delrin, weiß.

Bestellbeispiel:
nlm 02003-736X036

Hinweis:
Die Pendelauflagen werden zum Stützen und Spannen von unbearbeiteten und bearbeiteten Werkstücken verwendet.
Darüber hinaus dienen sie als Anschläge, Auflagen und Druckstücke im Vorrichtungs- und Werkzeugbau.
Die Kugel kann durch leichten Druck auf die Zylinderschraube aus dem Gehäuse entfernt werden.

Kugel gegen Verdrehen gesichert.

Tabelle mit Grippers und Einsätzen für Form C, K, F und M siehe 07113.

Vorteile:
- Hohe Wirtschaftlichkeit durch die Austauschbarkeit der Einsätze.
- Der eingebaute O-Ring hält die Kugel und verhindert das Eindringen von Schmutz und Fremdteilchen.
- Dadurch wird eine gleichmäßige Bewegung gewährleistet.

Form C
Stahleinsatz abgeflacht, plan

Form K
Delrineinsatz abgeflacht, plan

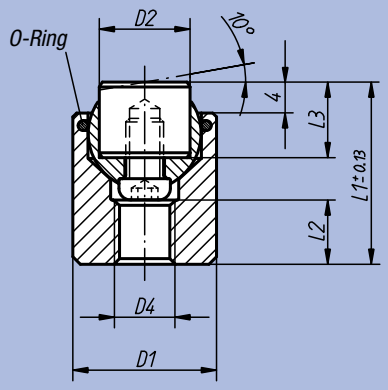

Form F
Gripper abgeflacht,
mit Riffelung

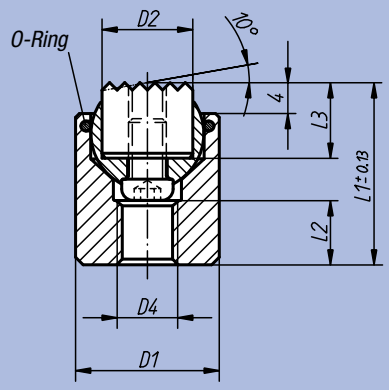

Form M
Gripper abgeflacht, mit
Riffelung aus Hartmetall

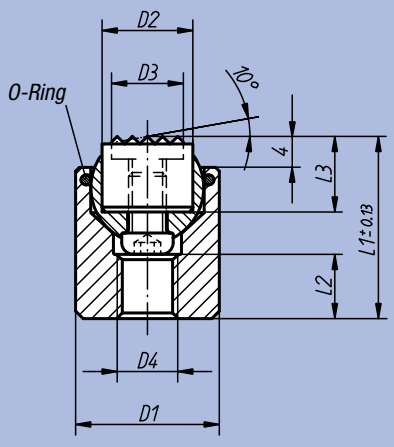

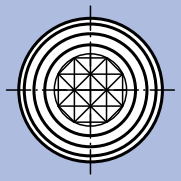

Pendelauflagen

mit O-Ring und auswechselbaren Einsätzen

Bestellnummer	Form	D1	D2	D4	L1	L2	L3	Kugel-Ø	Belastbarkeit max. kN (nur bei statischer Belastung)	kg	Bestellnummer für Stahleinsatz
02003-117X022	C	17	10	M6	22	7	10	13	28	0,031	07113-10108
02003-119X024	C	19	12	M8	24	8	10	15	39	0,043	07113-12108
02003-124X028	C	24	16	M10	28	8	10	20	58	0,081	07113-16108
02003-130X030	C	30	20	M12	30	9	10	23	95	0,139	07113-20108
02003-136X036	C	36	25	M12	36	11	10	28	136	0,251	07113-25108

Bestellnummer	Form	D1	D2	D4	L1	L2	L3	Kugel-Ø	Belastbarkeit max. kN (nur bei statischer Belastung)	kg	Bestellnummer für Gripper
02003-317X022	F	17	10	M6	22	7	10	13	28	0,031	07113-1010
02003-319X024	F	19	12	M8	24	8	10	15	39	0,045	07113-1210
02003-324X028	F	24	16	M10	28	8	10	20	58	0,082	07113-1610
02003-330X030	F	30	20	M12	30	9	10	23	95	0,141	07113-2010
02003-336X036	F	36	25	M12	36	11	10	28	136	0,249	07113-2510

Bestellnummer	Form	D1	D2	D4	L1	L2	L3	Kugel-Ø	Belastbarkeit max. kN (nur bei statischer Belastung)	kg	Bestellnummer für Delrineinsatz
02003-717X022	K	17	10	M6	22	7	10	13	4	0,027	07113-10109
02003-719X024	K	19	12	M8	24	8	10	15	7	0,036	07113-12109
02003-724X028	K	24	16	M10	28	8	10	20	14	0,069	07113-16109
02003-730X030	K	30	20	M12	30	9	10	23	27	0,121	07113-20109
02003-736X036	K	36	25	M12	36	11	10	28	47	0,221	07113-25109

Bestellnummer	Form	D1	D2	D3	D4	L1	L2	L3	Kugel-Ø	Belastbarkeit max. kN (nur bei statischer Belastung)	kg	Bestellnummer für Gripper
02003-917X022	M	17	10	7,9	M6	22	7	10	13	28	0,031	07113-10107
02003-919X024	M	19	12	9,5	M8	24	8	10	15	39	0,045	07113-12107
02003-924X028	M	24	16	12,7	M10	28	8	10	20	58	0,082	07113-16107
02003-930X030	M	30	20	15,9	M12	30	9	10	23	95	0,141	07113-20107
02003-936X036	M	36	25	19	M12	36	11	10	28	136	0,249	07113-25107

Pendelauflagen

selbsttätig rückschwenkend



Werkstoff:
Vergütungsstahl.

Ausführung:
gehärtet und brüniert.

Bestellbeispiel:
nlm 02004-105

Hinweis:
Die Pendelauflagen werden zum Stützen und Spannen von unbearbeiteten und bearbeiteten Werkstücken verwendet. Darüber hinaus dienen sie als Anschläge, Auflagen und Druckstücke im Vorrichtungs- und Werkzeugbau.

Vorteile:
- Ein eingebauter O-Ring verhindert das Eindringen von Schmutz und Fremdteilchen.
- Die Spannauflage schwenkt nach dem Spannen selbsttätig in die Nullstellung zurück.
- Hohe Belastbarkeit bei geringer Baugröße.

Form C
Anlage plan

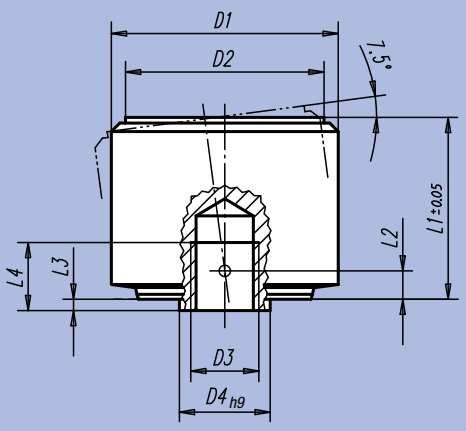

Form F
Anlage mit Riffelung

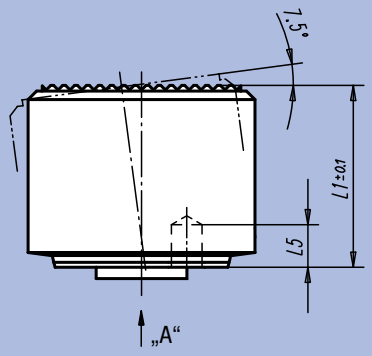

Ansicht „A“

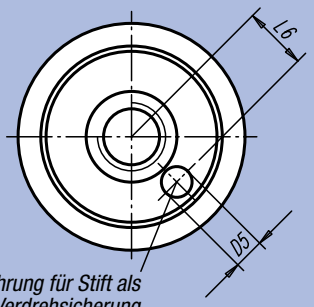

Bohrung für Stift als Verdrehsicherung

1. Greifer in Position bringen

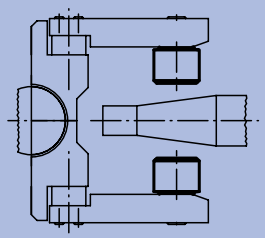

Nullstellung der Pendelauflage

2. Werkstück greifen

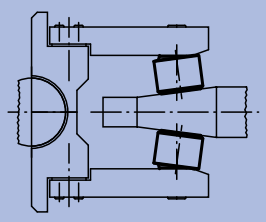

Pendelauflage passt sich der Kontur des Werkstückes an

3. Greifer öffnen

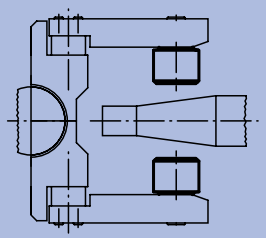

selbsttätige Rückstellung der Pendelauflage

Bestellnummer	Form	D1	D2	D3	D4	D5	L1	L2	L3	L4	L5	L6	Belastbarkeit max. kN (nur bei statischer Belastung)	kg
02004-105	C	18	15	M5	7	1,8	14	2,1	0,8	5	3	4,6	30	0,022
02004-106	C	22	18	M6	8	2,8	16,5	2,5	1	6	4	5,6	50	0,040
02004-108	C	28	23	M8	11	3,3	21,5	3,4	1,3	8	5	7,5	90	0,082
02004-110	C	34	29	M10	13	4,4	27	4,2	1,6	10	6	9,2	140	0,153
02004-112	C	40	35	M12	16	5,4	32	5	2	12	8	11,3	220	0,253
02004-305	F	18	15	M5	7	1,8	14	2,1	0,8	5	3	4,6	30	0,022
02004-306	F	22	18	M6	8	2,8	16,5	2,5	1	6	4	5,6	50	0,040
02004-308	F	28	23	M8	11	3,3	21,5	3,4	1,3	8	5	7,5	90	0,082
02004-310	F	34	29	M10	13	4,4	27	4,2	1,6	10	6	9,2	140	0,153
02004-312	F	40	35	M12	16	5,4	32	5	2	12	8	11,3	220	0,253

Pendelauflagen verstellbar



Werkstoff:
Stahl.

Ausführung:
Gehäuse vergütet und mangan-phosphatiert. Kugel gehärtet, blank. Mutter brüniert.

Bestellbeispiel:
nlm 02005-316

Hinweis:
Die Kugel ist gegen Verdrehen gesichert.

Form C
Kugel abgeflacht, plan

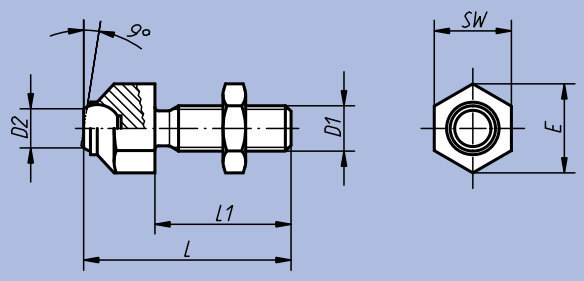

Form F
Kugel abgeflacht, mit Riffelung

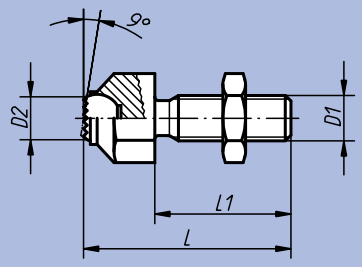

Bestellnummer	Form	D1	D2	L	L1	E	SW	Kugel-Ø	Belastbarkeit max. kN (nur bei statischer Belastung)	kg
02005-108	C	M8	5,8	36,6	25	14,5	13	8,5	8	0,025
02005-110	C	M10	8,6	45,7	30	19	17	12	8	0,055
02005-112	C	M12	8,6	50,7	35	19	17	12	15	0,055
02005-116	C	M16	10,5	60,7	40	27	24	16	25	0,115
02005-120	C	M20	20	77,3	50	33	30	25	90	0,230
02005-308	F	M8	5,8	36,6	25	14,5	13	8,5	8	0,025
02005-310	F	M10	8,6	45,7	30	19	17	12	8	0,055
02005-312	F	M12	8,6	50,7	35	19	17	12	15	0,055
02005-316	F	M16	10,5	60,7	40	27	24	16	25	0,115
02005-320	F	M20	20	77,3	50	33	30	25	90	0,230

Pendelauflagen verstellbar

mit O-Ring



Werkstoff:
Körper Vergütungsstahl.
Kugel Werkzeugstahl. Form K Delrin.

Ausführung:
Körper vergütet.
Kugel gehärtet, brüniert.
Delrinkugel weiß.

Bestellbeispiel:
nlm 02006-106X040

Hinweis:
Die Pendelauflagen werden zum Stützen und Spannen von unbearbeiteten und bearbeiteten Werkstücken verwendet.
Darüber hinaus dienen sie als Anschläge, Auflagen und Druckstücke im Vorrichtungs- und Werkzeugbau.

Kugel gegen Verdrehen gesichert.

Vorteile:
- Der eingebaute O-Ring hält die Kugel und verhindert das Eindringen von Schmutz und Fremdteilchen.
- Dadurch wird eine gleichmäßige Bewegung gewährleistet.

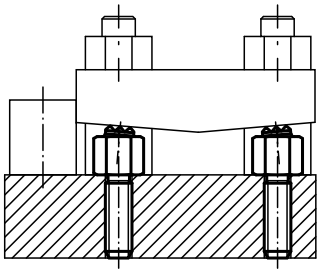

Form C
Stahlkugel abgeflacht, plan

Form F
Stahlkugel abgeflacht, mit Riffelung

Form K
Delrinkugel abgeflacht, plan

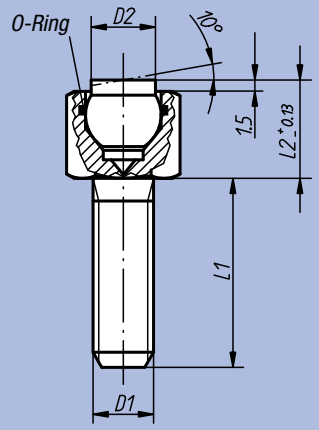

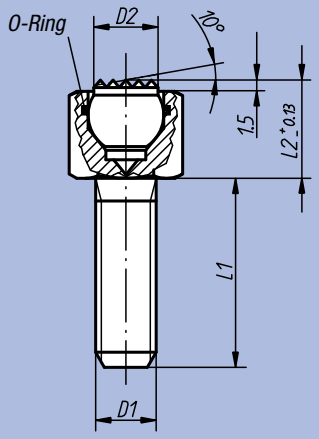

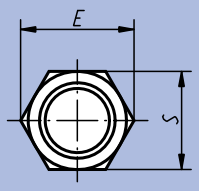

Bestellnummer	Form	D1	D2	L1	L2	E	S	Kugel-Ø	Belastbarkeit max. kN (nur bei statischer Belastung)	kg
02006-106X012	C	M6	6	12	9,5	11,5	10	7	9	0,007
02006-106X025	C	M6	6	25	9,5	11,5	10	7	9	0,010
02006-106X040	C	M6	6	40	9,5	11,5	10	7	9	0,012
02006-108X012	C	M8	8,5	12	13	15	13	10	15	0,016
02006-108X025	C	M8	8,5	25	13	15	13	10	15	0,021
02006-108X040	C	M8	8,5	40	13	15	13	10	15	0,026
02006-306X012	F	M6	6	12	9,5	11,5	10	7	9	0,007
02006-306X025	F	M6	6	25	9,5	11,5	10	7	9	0,010
02006-306X040	F	M6	6	40	9,5	11,5	10	7	9	0,012
02006-308X012	F	M8	8,5	12	13	15	13	10	15	0,016
02006-308X025	F	M8	8,5	25	13	15	13	10	15	0,021
02006-308X040	F	M8	8,5	40	13	15	13	10	15	0,025
02006-706X012	K	M6	6	12	9,5	11,5	10	7	2	0,006
02006-706X025	K	M6	6	25	9,5	11,5	10	7	2	0,009
02006-706X040	K	M6	6	40	9,5	11,5	10	7	2	0,011
02006-708X012	K	M8	8,5	12	13	15	13	10	4	0,012
02006-708X025	K	M8	8,5	25	13	15	13	10	4	0,017
02006-708X040	K	M8	8,5	40	13	15	13	10	4	0,022

Für Notizen:

Pendelauflagen verstellbar

mit O-Ring und auswechselbaren Einsätzen



Werkstoff, Ausführung:
Körper Vergütungsstahl,
vergütet und brüniert.
Kugel rost- und säurebeständiger Stahl, gehärtet und blank.
Einsatz:
Form C Werkzeugstahl,
gehärtet und brüniert.
Form F Werkzeugstahl,
gehärtet und brüniert.
Form M Werkzeugstahl mit Hartmetallriffelung, brüniert.
Form K Delrin, weiß.

Bestellbeispiel:
nlm 02007-124X100

Hinweis:
Die Pendelauflagen werden zum Stützen und Spannen von unbearbeiteten und bearbeiteten Werkstücken verwendet.
Darüber hinaus dienen sie als Anschläge, Auflagen und Druckstücke im Vorrichtungs- und Werkzeugbau.
Die Kugel kann durch leichten Druck auf die Zylinderschraube aus dem Gehäuse entfernt werden.

Kugel gegen Verdrehen gesichert.

Tabelle mit Grippers und Einsätzen für Form C, K, F und M siehe 07113.

Vorteile:
- Hohe Wirtschaftlichkeit durch die Austauschbarkeit der Einsätze.
- Der eingebaute O-Ring hält die Kugel und verhindert das Eindringen von Schmutz und Fremdteilchen.
- Dadurch wird eine gleichmäßige Bewegung gewährleistet.

Form C
Stahleinsatz abgeflacht, plan

Form F
Gripper abgeflacht, mit Riffelung

Form M
Gripper abgeflacht, mit Riffelung aus Hartmetall

Form K
Delrineinsatz abgeflacht, plan

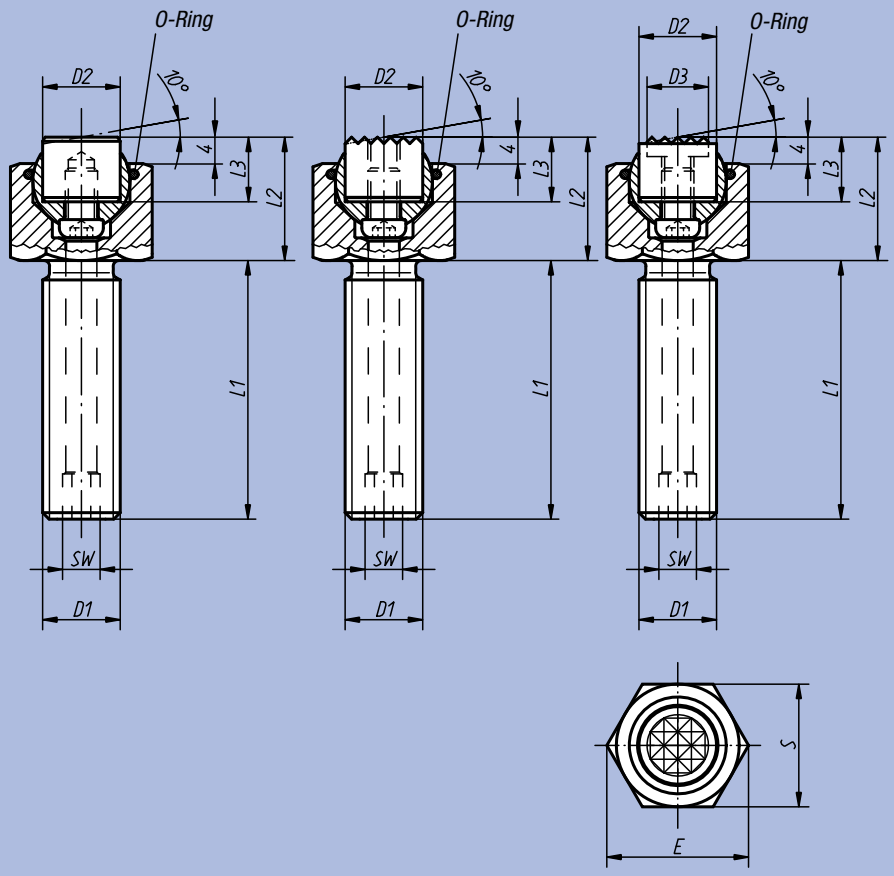

Bestellnummer	Form	D1	D2	L1	L2	L3	E	S	SW	Kugel-Ø	Belastbarkeit max. kN (nur bei statischer Belastung)	□ kg	Bestellnummer für Stahleinsatz
02007-110X015	C	M10	10	15	17	10	19,6	17	3	13	19	0,032	07113-10108
02007-110X030	C	M10	10	30	17	10	19,6	17	3	13	19	0,039	07113-10108
02007-110X050	C	M10	10	50	17	10	19,6	17	3	13	19	0,047	07113-10108
02007-112X020	C	M12	12	20	19	10	21,9	19	5	15	30	0,048	07113-12108
02007-112X040	C	M12	12	40	19	10	21,9	19	5	15	30	0,059	07113-12108
02007-112X060	C	M12	12	60	19	10	21,9	19	5	15	30	0,071	07113-12108
02007-116X025	C	M16	16	25	23	10	27,7	24	6	20	50	0,100	07113-16108
02007-116X050	C	M16	16	50	23	10	27,7	24	6	20	50	0,127	07113-16108
02007-116X080	C	M16	16	80	23	10	27,7	24	6	20	50	0,159	07113-16108
02007-120X030	C	M20	20	30	24	10	34,6	30	8	23	85	0,171	07113-20108
02007-120X060	C	M20	20	60	24	10	34,6	30	8	23	85	0,220	07113-20108
02007-120X100	C	M20	20	100	24	10	34,6	30	8	23	85	0,289	07113-20108
02007-124X040	C	M24	25	40	30	10	41,6	36	10	28	121	0,321	07113-25108
02007-124X100	C	M24	25	100	30	10	41,6	36	10	28	121	0,468	07113-25108

Pendelauflagen verstellbar

mit O-Ring und auswechselbaren Einsätzen

Bestellnummer	Form	D1	D2	L1	L2	L3	E	S	SW	Kugel-Ø	Belastbarkeit max. kN (nur bei statischer Belastung)	kg	Bestellnummer für Gripper
02007-310X015	F	M10	10	15	17	10	19,6	17	3	13	19	0,031	07113-1010
02007-310X030	F	M10	10	30	17	10	19,6	17	3	13	19	0,038	07113-1010
02007-310X050	F	M10	10	50	17	10	19,6	17	3	13	19	0,047	07113-1010
02007-312X020	F	M12	12	20	19	10	21,9	19	5	15	30	0,050	07113-1210
02007-312X040	F	M12	12	40	19	10	21,9	19	5	15	30	0,061	07113-1210
02007-312X060	F	M12	12	60	19	10	21,9	19	5	15	30	0,073	07113-1210
02007-316X025	F	M16	16	25	23	10	27,7	24	6	20	50	0,100	07113-1610
02007-316X050	F	M16	16	50	23	10	27,7	24	6	20	50	0,127	07113-1610
02007-316X080	F	M16	16	80	23	10	27,7	24	6	20	50	0,159	07113-1610
02007-320X030	F	M20	20	30	24	10	34,6	30	8	23	85	0,173	07113-2010
02007-320X060	F	M20	20	60	24	10	34,6	30	8	23	85	0,222	07113-2010
02007-320X100	F	M20	20	100	24	10	34,6	30	8	23	85	0,290	07113-2010
02007-324X040	F	M24	25	40	30	10	41,6	36	10	28	121	0,319	07113-2510
02007-324X100	F	M24	25	100	30	10	41,6	36	10	28	121	0,466	07113-2510

Bestellnummer	Form	D1	D2	L1	L2	L3	E	S	SW	Kugel-Ø	Belastbarkeit max. kN (nur bei statischer Belastung)	kg	Bestellnummer für Delrineinsatz
02007-710X015	K	M10	10	15	17	10	19,6	17	3	13	4	0,027	07113-10109
02007-710X030	K	M10	10	30	17	10	19,6	17	3	13	4	0,034	07113-10109
02007-710X050	K	M10	10	50	17	10	19,6	17	3	13	4	0,043	07113-10109
02007-712X020	K	M12	12	20	19	10	21,9	19	5	15	7	0,041	07113-12109
02007-712X040	K	M12	12	40	19	10	21,9	19	5	15	7	0,052	07113-12109
02007-712X060	K	M12	12	60	19	10	21,9	19	5	15	7	0,064	07113-12109
02007-716X025	K	M16	16	25	23	10	27,7	24	6	20	14	0,088	07113-16109
02007-716X050	K	M16	16	50	23	10	27,7	24	6	20	14	0,115	07113-16109
02007-716X080	K	M16	16	80	23	10	27,7	24	6	20	14	0,147	07113-16109
02007-720X030	K	M20	20	30	24	10	34,6	30	8	23	27	0,152	07113-20109
02007-720X060	K	M20	20	60	24	10	34,6	30	8	23	27	0,202	07113-20109
02007-720X100	K	M20	20	100	24	10	34,6	30	8	23	27	0,270	07113-20109
02007-724X040	K	M24	25	40	30	10	41,6	36	10	28	47	0,291	07113-25109
02007-724X100	K	M24	25	100	30	10	41,6	36	10	28	47	0,438	07113-25109

Bestellnummer	Form	D1	D2	D3	L1	L2	L3	E	S	SW	Kugel-Ø	Belastbarkeit max. kN (nur bei statischer Belastung)	kg	Bestellnummer für Gripper
02007-910X015	M	M10	10	7,9	15	17	10	19,6	17	3	13	19	0,031	07113-10107
02007-910X030	M	M10	10	7,9	30	17	10	19,6	17	3	13	19	0,038	07113-10107
02007-910X050	M	M10	10	7,9	50	17	10	19,6	17	3	13	19	0,047	07113-10107
02007-912X020	M	M12	12	9,5	20	19	10	21,9	19	5	15	30	0,050	07113-12107
02007-912X040	M	M12	12	9,5	40	19	10	21,9	19	5	15	30	0,061	07113-12107
02007-912X060	M	M12	12	9,5	60	19	10	21,9	19	5	15	30	0,073	07113-12107
02007-916X025	M	M16	16	12,7	25	23	10	27,7	24	6	20	50	0,100	07113-16107
02007-916X050	M	M16	16	12,7	50	23	10	27,7	24	6	20	50	0,127	07113-16107
02007-916X080	M	M16	16	12,7	80	23	10	27,7	24	6	20	50	0,159	07113-16107
02007-920X030	M	M20	20	15,9	30	24	10	34,6	30	8	23	85	0,173	07113-20107
02007-920X060	M	M20	20	15,9	60	24	10	34,6	30	8	23	85	0,222	07113-20107
02007-920X100	M	M20	20	15,9	100	24	10	34,6	30	8	23	85	0,290	07113-20107
02007-924X040	M	M24	25	19	40	30	10	41,6	36	10	28	121	0,319	07113-25107
02007-924X100	M	M24	25	19	100	30	10	41,6	36	10	28	121	0,466	07113-25107

Pendelauflagen verstellbar

mit O-Ring und Innensechskant



Werkstoff:
Körper Vergütungsstahl.
Kugel Werkzeugstahl.
Form K Delrin.

Ausführung:
Körper vergütet.
Kugel gehärtet, brüniert.
Delrinkugel weiß.

Bestellbeispiel:
nlm 02008-112X050

Hinweis:
Die Pendelauflagen werden zum Stützen und Spannen von Werkstücken verwendet. Darüber hinaus dienen sie als Anschläge, Auflagen und Druckstücke im Vorrichtungs- und Werkzeugbau.

Kugel gegen Verdrehen gesichert.

Vorteile:
- Der eingebaute O-Ring hält die Kugel und verhindert das Eindringen von Schmutz und Fremdteilchen.
- Dadurch wird eine gleichmäßige Bewegung gewährleistet.
- Der Innensechskant ermöglicht bei Durchgangsbohrungen ein leichtes Verstellen und Positionieren.

Form C
Stahlkugel abgeflacht, plan

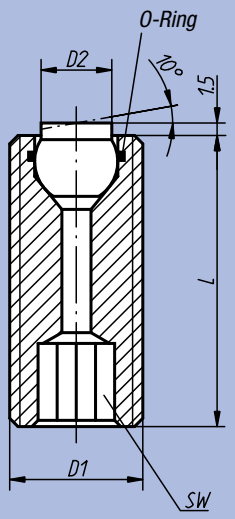

Form F
Stahlkugel abgeflacht, mit Riffelung

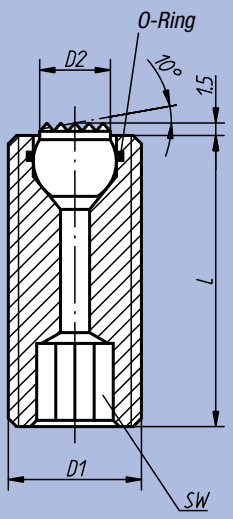

Form K
Delrinkugel abgeflacht, plan

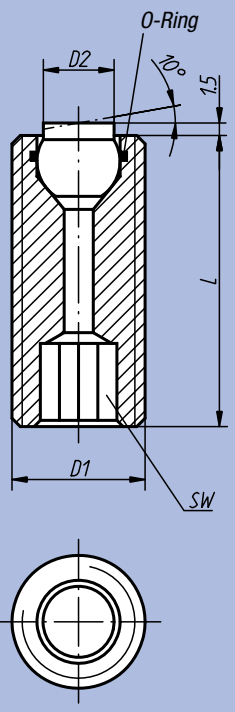

Bestellnummer	Form	D1	D2	L	SW	Kugel-Ø	Belastbarkeit max. kN (nur bei statischer Belastung)	kg
02008-112X025	C	M12	6	25	6	7	15	0,015
02008-112X035	C	M12	6	35	6	7	15	0,022
02008-112X050	C	M12	6	50	6	7	15	0,032
02008-116X025	C	M16	8,5	25	8	10	23	0,028
02008-116X035	C	M16	8,5	35	8	10	23	0,039
02008-116X050	C	M16	8,5	50	8	10	23	0,058
02008-312X025	F	M12	6	25	6	7	15	0,015
02008-312X035	F	M12	6	35	6	7	15	0,022
02008-312X050	F	M12	6	50	6	7	15	0,032
02008-316X025	F	M16	8,5	25	8	10	23	0,027
02008-316X035	F	M16	8,5	35	8	10	23	0,039
02008-316X050	F	M16	8,5	50	8	10	23	0,057
02008-712X025	K	M12	6	25	6	7	2	0,013
02008-712X035	K	M12	6	35	6	7	2	0,021
02008-712X050	K	M12	6	50	6	7	2	0,031
02008-716X025	K	M16	8,5	25	8	10	4	0,024
02008-716X035	K	M16	8,5	35	8	10	4	0,035
02008-716X050	K	M16	8,5	50	8	10	4	0,054

Für Notizen:

Pendelauflagen verstellbar

mit O-Ring, auswechselbaren Einsätzen und Innensechskant



Werkstoff, Ausführung:
Körper Vergütungsstahl, vergütet und brüniert.
Kugel rost- und säurebeständiger Stahl, gehärtet und blank.
Einsatz:
Form C Werkzeugstahl, gehärtet und brüniert.
Form F Werkzeugstahl, gehärtet und brüniert.
Form M Werkzeugstahl mit Hartmetallriffelung, brüniert.
Form K Delrin, weiß.

Bestellbeispiel:
nlm 02009-720X070

Hinweis:
Die Pendelauflagen werden zum Stützen und Spannen von unbearbeiteten und bearbeiteten Werkstücken verwendet.
Darüber hinaus dienen sie als Anschläge, Auflagen und Druckstücke im Vorrichtungs- und Werkzeugbau.
Die Kugel kann durch leichten Druck auf die Zylinderschraube aus dem Gehäuse entfernt werden.

Kugel gegen Verdrehen gesichert.

Tabelle mit Grippers und Einsätzen für Form C, K, F und M siehe 07113.

Vorteile:
- Hohe Wirtschaftlichkeit durch die Austauschbarkeit der Einsätze.
- Der eingebaute O-Ring hält die Kugel und verhindert das Eindringen von Schmutz und Fremdteilchen.
- Dadurch wird eine gleichmäßige Bewegung gewährleistet.

Form C
Stahleinsatz abgeflacht, plan

Form K
Delrineinsatz abgeflacht, plan

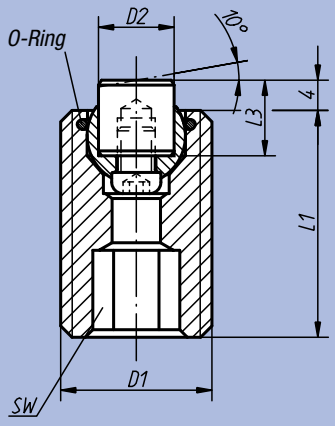

Form F
Gripper abgeflacht, mit Riffelung

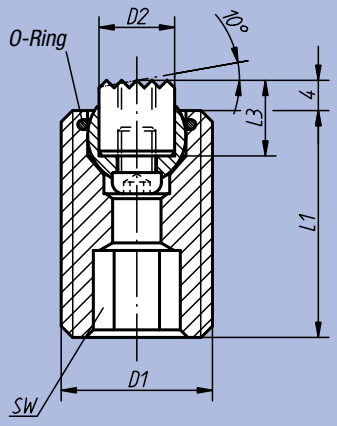

Form M
Gripper abgeflacht, mit Riffelung aus Hartmetall

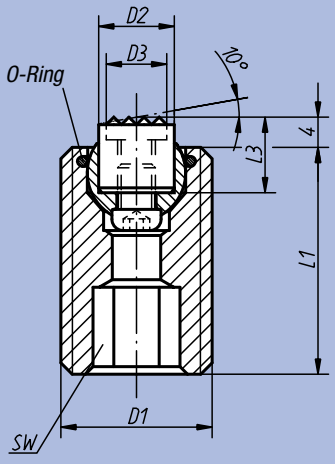

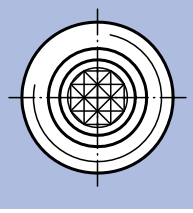

Pendelauflagen verstellbar

mit O-Ring, auswechselbaren Einsätzen und Innensechskant

Bestellnummer	Form	D1	D2	L1	L3	SW	Kugel-Ø	Belastbarkeit max. kN (nur bei statischer Belastung)	kg	Bestellnummer für Stahleinsatz
02009-120X030	C	M20	10	30	10	8	13	37	0,049	07113-10108
02009-120X050	C	M20	10	50	10	8	13	37	0,084	07113-10108
02009-120X070	C	M20	10	70	10	8	13	37	0,122	07113-10108
02009-124X040	C	M24	12	40	10	10	15	55	0,101	07113-12108
02009-124X080	C	M24	12	80	10	10	15	55	0,200	07113-12108

Bestellnummer	Form	D1	D2	L1	L3	SW	Kugel-Ø	Belastbarkeit max. kN (nur bei statischer Belastung)	kg	Bestellnummer für Gripper
02009-320X030	F	M20	10	30	10	8	13	37	0,049	07113-1010
02009-320X050	F	M20	10	50	10	8	13	37	0,084	07113-1010
02009-320X070	F	M20	10	70	10	8	13	37	0,121	07113-1010
02009-324X040	F	M24	12	40	10	10	15	55	0,103	07113-1210
02009-324X080	F	M24	12	80	10	10	15	55	0,201	07113-1210

Bestellnummer	Form	D1	D2	L1	L3	SW	Kugel-Ø	Belastbarkeit max. kN (nur bei statischer Belastung)	kg	Bestellnummer für Delrineinsatz
02009-720X030	K	M20	10	30	10	8	13	4	0,045	07113-10109
02009-720X050	K	M20	10	50	10	8	13	4	0,080	07113-10109
02009-720X070	K	M20	10	70	10	8	13	4	0,117	07113-10109
02009-724X040	K	M24	12	40	10	10	15	7	0,094	07113-12109
02009-724X080	K	M24	12	80	10	10	15	7	0,193	07113-12109

Bestellnummer	Form	D1	D2	D3	L1	L3	SW	Kugel-Ø	Belastbarkeit max. kN (nur bei statischer Belastung)	kg	Bestellnummer für Gripper
02009-920X030	M	M20	10	7,9	30	10	8	13	37	0,049	07113-10107
02009-920X050	M	M20	10	7,9	50	10	8	13	37	0,084	07113-10107
02009-920X070	M	M20	10	7,9	70	10	8	13	37	0,121	07113-10107
02009-924X040	M	M24	12	9,5	40	10	10	15	55	0,103	07113-12107
02009-924X080	M	M24	12	9,5	80	10	10	15	55	0,201	07113-12107

Auflagebolzen



Werkstoff:
Werkzeugstahl.
Ausführung:
gehärtet und geschliffen.
Auflagefläche ohne Zentrierung.
Bestellbeispiel:
nlm 02010-041
Hinweis:
Bei Anwendung mehrerer Auflagebolzen kann die Auflagehöhe nachgeschliffen werden. Die Auflagebolzen sind auch als Füße für Vorrichtungen verwendbar.

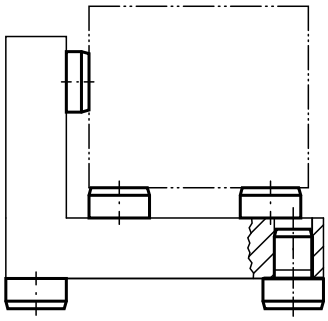

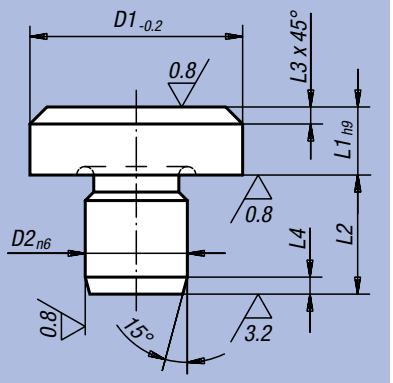

Bestellnummer	D1	L1	D2	L2	L3	L4	kg
02010-041	6	2,5	4	6,5	0,7	1,2	0,001
02010-042	6	4,5	4	8,5	0,7	1,2	0,002
02010-04	6	5	4	6	0,7	1,2	0,002
02010-061	10	4,5	6	8,5	0,9	1,5	0,004
02010-06	10	8	6	8,5	0,9	1,5	0,006
02010-08	16	5	8	10	2	2	0,011
02010-081	16	13	8	10	2	2	0,024
02010-10	20	6	10	12	2	2	0,022
02010-101	20	12	10	12	2	2	0,025
02010-12	25	8	12	14	2	2	0,041
02010-122	25	20	12	14	2	2	0,087
02010-123	25	30	12	14	2	2	0,130
02010-16	30	25	16	20	2,5	2,5	0,170
02010-164	30	40	16	20	2,5	2,5	0,250
02010-165	30	50	16	20	2,5	2,5	0,310
02010-166	30	65	16	20	2,5	2,5	0,390
02010-20	30	80	20	20	2,5	2,5	0,485
02010-201	30	100	20	20	2,5	2,5	0,600
02010-202	40	13	20	20	3,2	3,2	0,175
02010-203	40	32	20	20	3,2	3,2	0,360

Aufnahme- und Auflagebolzen

DIN 6321 (Ausgabe 1973)



Werkstoff:
Werkzeugstahl.

Ausführung:
gehärtet und geschliffen.
Auflagefläche ohne Zentrierung.

Bestellbeispiel:
nlm 02020-212

Hinweis:
Auflagebolzen Form A dienen als Auflage für Werkstücke und Vorrichtungen. Aufnahmebolzen Form B dienen zum Positionieren von Werkstücken und Vorrichtungsteilen in Bohrungen mit Passmaß.
Mit der abgeflachten Form C können Toleranzen im Abstandsmaß von Bohrungen überbrückt oder das zu positionierende Teil nur in eine Richtung festgelegt werden.
Die Formen A und B sind auch als gehärtete Anschläge und als Füße für Vorrichtungen verwendbar.
Ähnliche Bolzen siehe 03120, 03130, 03140 und 03150.

Form A
Auflagebolzen

Form B
Aufnahmebolzen
zylindrisch

Form C
Aufnahmebolzen
abgeflacht

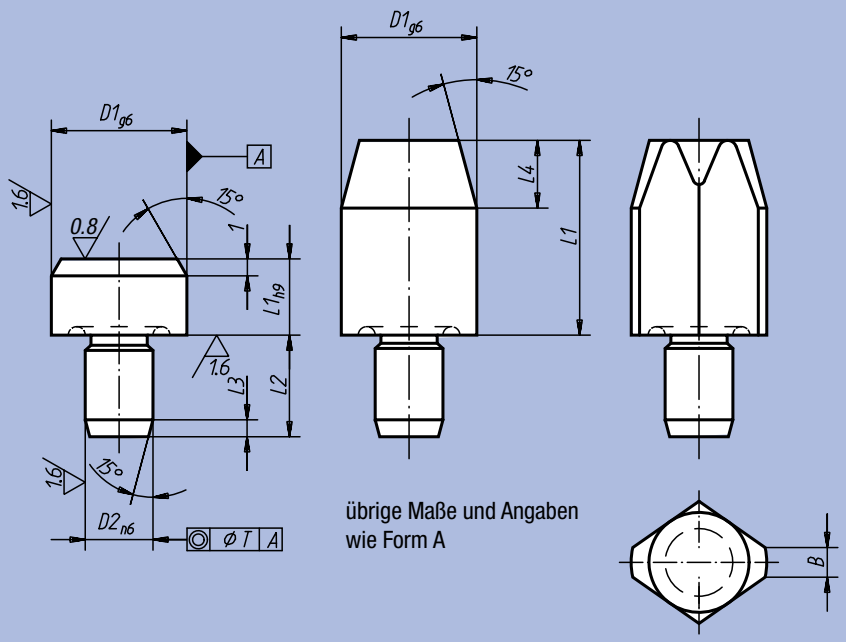

übrige Maße und Angaben wie Form A

Aufnahme- und Auflagebolzen

Bestellnummer	Form	D1	L1	D2	L2	L3	T	g
02020-106	A	6	5	4	6	1,2	0,02	1,5
02020-110	A	10	6	6	9	1,6	0,02	5,5
02020-116	A	16	8	8	12	2	0,04	16,0
02020-125	A	25	10	12	18	2,5	0,04	50,0

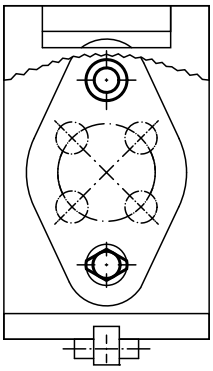

Aufnahmebolzen kurz

Bestellnummer Form B	Bestellnummer Form C	Ausführung	D1	L1	D2	L2	L3	L4	B	T	g
02020-206	02020-406	kurz	6	7	4	6	1,2	4	1	0,02	2
02020-208	02020-408	kurz	8	10	6	9	1,6	6	1,6	0,02	6
02020-210	02020-410	kurz	10	10	6	9	1,6	6	2,5	0,02	7
02020-212	02020-412	kurz	12	10	6	9	1,6	6	2,5	0,02	8
02020-216	02020-416	kurz	16	13	8	12	2	8	3,5	0,04	21
02020-220	02020-420	kurz	20	15	12	18	2,5	9	5	0,04	46
02020-225	02020-425	kurz	25	15	12	18	2,5	9	5	0,04	66

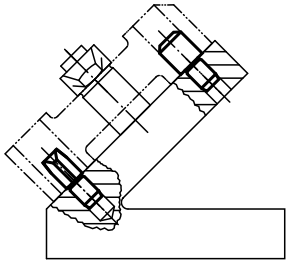

Aufnahmebolzen lang

Bestellnummer Form B	Bestellnummer Form C	Ausführung	D1	L1	D2	L2	L3	L4	B	T	g
02020-306	02020-506	lang	6	12	4	6	1,2	4	1	0,02	3
02020-308	02020-508	lang	8	16	6	9	1,6	6	1,6	0,02	8
02020-310	02020-510	lang	10	18	6	9	1,6	6	2,5	0,02	10
02020-312	02020-512	lang	12	18	6	9	1,6	6	2,5	0,02	12
02020-316	02020-516	lang	16	22	8	12	2	8	3,5	0,04	31
02020-320	02020-520	lang	20	25	12	18	2,5	9	5	0,04	64
02020-325	02020-525	lang	25	25	12	18	2,5	9	5	0,04	98

Auflagebolzen



Werkstoff:
Körper Vergütungsstahl.
Ausführung:
Körper vergütet und brüniert.
Bestellbeispiel:
nlm 02028-106012
Hinweis:
Die Auflagebolzen werden zum Stützen von unbearbeiteten und bearbeiteten Werkstücken verwendet. Darüber hinaus dienen sie als Anschläge und Druckstücke im Vorrichtungs- und Werkzeugbau.
In das Gewinde D können Gewindestifte oder Stiftschrauben eingedreht und verklebt werden.
So erhält man auf einfache Art eine Auflage mit Außengewinde.

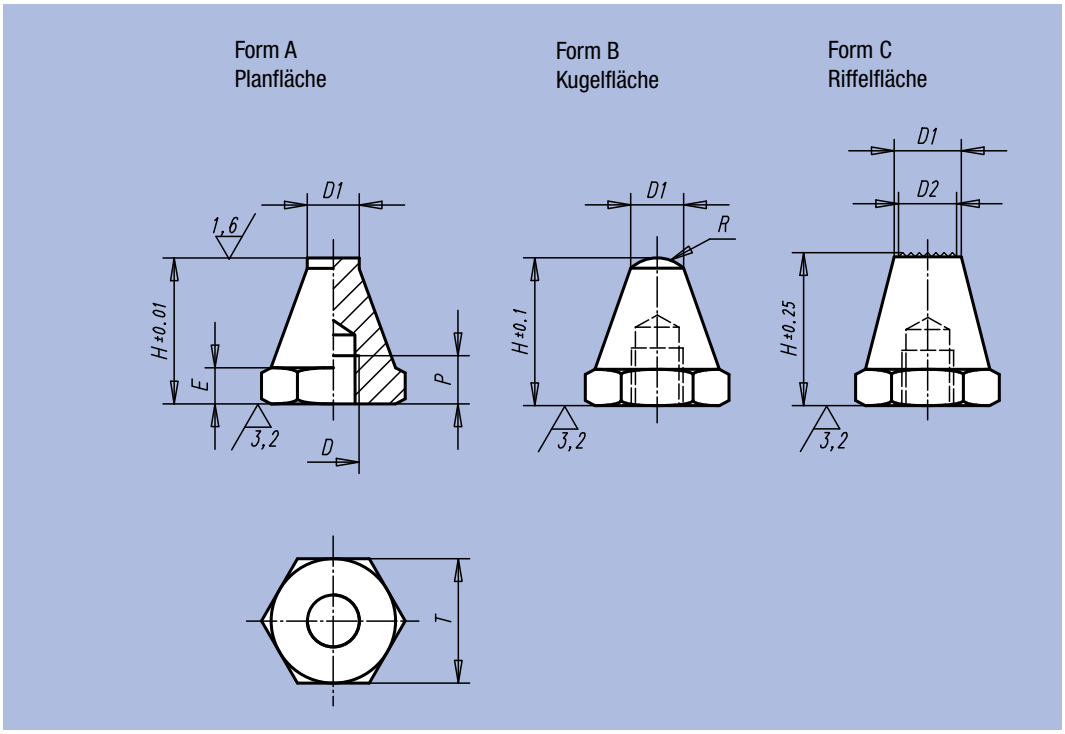

Bestellnummer Form A	Bestellnummer Form B	Bestellnummer Form C	D	D1	D2	E	H	P	R	T	kg
02028-106012	02028-206012	02028-306012	M6	6	5	3	12,5	4	5	11	0,005
02028-106025	02028-206025	02028-306025	M6	6	5	3	25	7	5	11	0,008
02028-108015	02028-208015	02028-308015	M8	8	6	4	15	6	8,5	13	0,009
02028-108030	02028-208030	02028-308030	M8	8	6	4	30	9	8,5	13	0,018
02028-110020	02028-210020	02028-310020	M10	10	8	5	20	9	9	17	0,017
02028-110040	02028-210040	02028-310040	M10	10	8	5	40	13	9	17	0,035
02028-112025	02028-212025	02028-312025	M12	12	9,5	6	25	11	12,75	19	0,025
02028-112050	02028-212050	02028-312050	M12	12	9,5	6	50	16	12,75	19	0,062
02028-116030	02028-216030	02028-316030	M16	16	13	8	30	12	17	24	0,050
02028-116060	02028-216060	02028-316060	M16	16	13	8	60	20	17	24	0,112

Auflagebolzen

mit Positionierzapfen



Werkstoff:
Körper Vergütungsstahl.
Ausführung:
Körper vergütet und brüniert.
Auflageflächen einsatzgehärtet.
Bestellbeispiel:
nlm 02029-106012
Hinweis:
Die Auflagebolzen werden zum Stützen von unbearbeiteten und bearbeiteten Werkstücken verwendet. Darüber hinaus dienen sie als Anschläge und Druckstücke im Vorrichtungs- und Werkzeugbau.
In das Gewinde D können Gewindestifte oder Stiftschrauben eingedreht und verklebt werden.
So erhält man auf einfache Art eine Auflage mit Außengewinde.

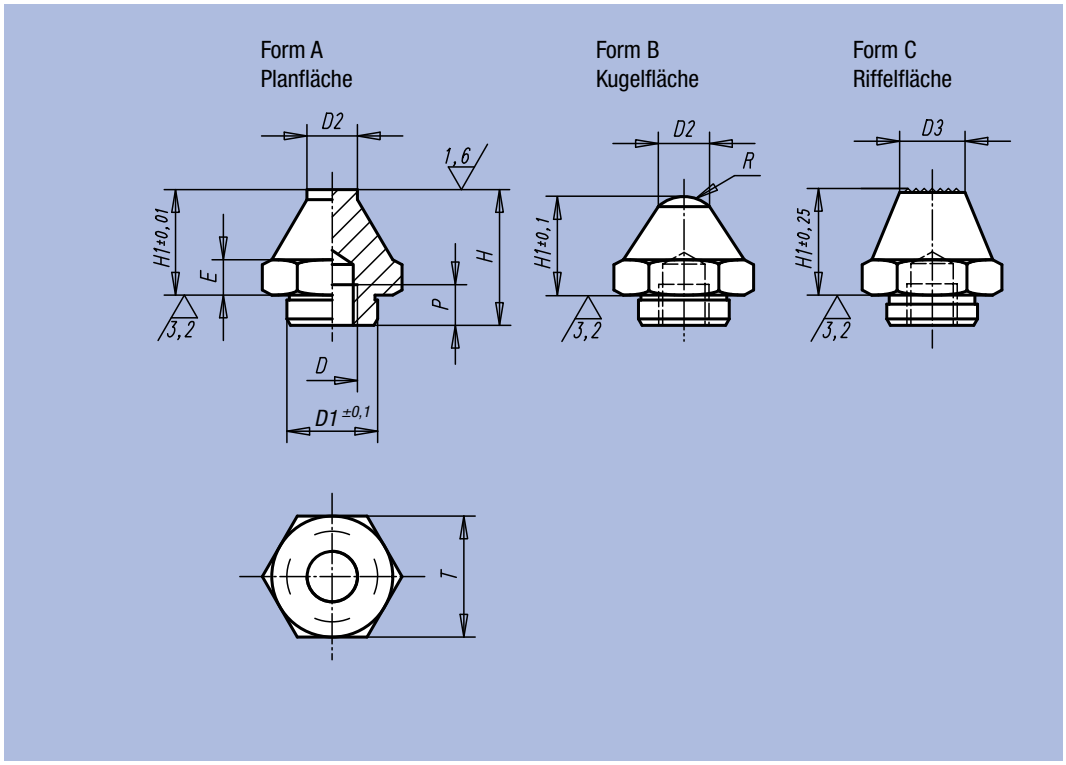

Bestellnummer	Form	D	D1	D2	D3	E	H	H1	P	R	T	kg
02029-106012	A	M6	11,9	7	-	4	16,5	12,5	6	6	17	0,042
02029-106025	A	M6	11,9	7	-	4	29	25	6	6	17	0,062
02029-110020	A	M10	17,8	10	-	7	25	20	10	7,5	24	0,130
02029-110040	A	M10	17,8	10	-	7	46	40	10	7,5	24	0,180
02029-116030	A	M16	25,8	20	-	13	40	30	16	26	41	0,295
02029-116060	A	M16	25,8	20	-	13	70	60	16	26	41	0,480
02029-206012	B	M6	11,9	7	-	4	16,5	12,5	6	6	17	0,042
02029-206025	B	M6	11,9	7	-	4	29	25	6	6	17	0,062
02029-210020	B	M10	17,8	10	-	7	25	20	10	7,5	24	0,130
02029-210040	B	M10	17,8	10	-	7	46	40	10	7,5	24	0,180
02029-216030	B	M16	25,8	20	-	13	40	30	16	26	41	0,295
02029-216060	B	M16	25,8	20	-	13	70	60	16	26	41	0,480
02029-310020	C	M10	17,8	-	15	7	25	20	10	7,5	24	0,130
02029-310040	C	M10	17,8	-	10	7	46	40	10	7,5	24	0,180
02029-316030	C	M16	25,8	-	20	13	40	30	16	26	41	0,295
02029-316060	C	M16	25,8	-	20	13	70	60	16	26	41	0,480

Füße

mit Gewindezapfen DIN 6320 (Ausgabe 1971)



Werkstoff:
Vergütungsstahl 1.1172.
Ausführung:
brüniert.
Bestellbeispiel:
nlm 02030-10
Hinweis:
Auflagebolzen 02010 und 02020 können ebenfalls als Füße verwendet werden.

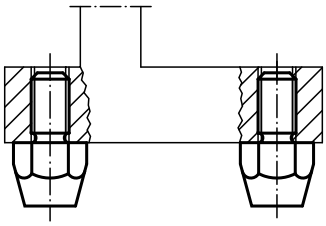

Form A
mit glatter Auflagefläche

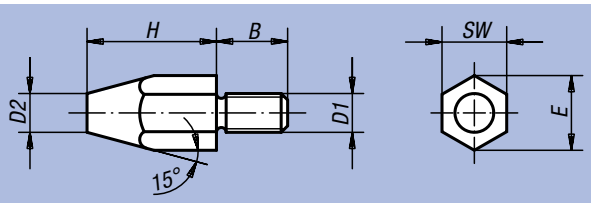

Form B
mit Hartmetallspitzen

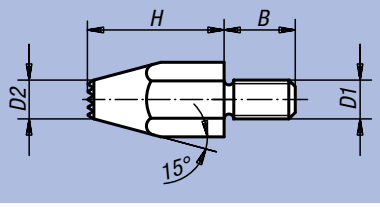

Bestellnummer	Form	D1	D2	H	B	E	SW	kg
02030-06	A	M6	8	10	11	11,5	10	0,008
02030-061	A	M6	6	20	11	11,5	10	0,013
02030-08	A	M8	10	15	13	15	13	0,018
02030-081	A	M8	9	30	13	15	13	0,033
02030-10	A	M10	13	20	16	19,6	17	0,044
02030-101	A	M10	13	40	16	19,6	17	0,080
02030-12	A	M12	15	25	20	21,9	19	0,070
02030-121	A	M12	15	50	20	21,9	19	0,126
02030-083	B	M8	11,5	15	13	15	13	0,018
02030-123	B	M12	15	25	20	21,9	19	0,070

Verlängerungsstücke



Werkstoff:
Vergütungsstahl.
Ausführung:
brüniert.
Bestellbeispiel:
nlm 02035-120750
Hinweis:
Verlängerungsstücke werden zum Verlängern von Pendelauflagen, Federnden Druckstücken, Positionsfüßen, Stützschrauben und ähnlichem eingesetzt.

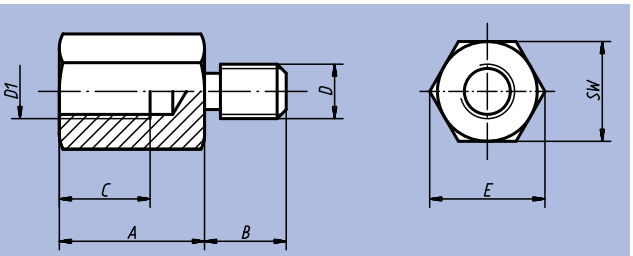

Bestellnummer	A	B	C	D	D1	E	SW	kg
02035-08025	25	13	15	M8	M8	15	13	0,035
02035-08032	32	13	15	M8	M8	15	13	0,043
02035-08040	40	13	15	M8	M8	15	13	0,051
02035-10025	25	15	17	M10	M10	19,6	17	0,056
02035-10032	32	15	17	M10	M10	19,6	17	0,065
02035-10040	40	15	17	M10	M10	19,6	17	0,085
02035-120320	32	18	20	M12	M12	25,4	22	0,095
02035-120500	50	18	20	M12	M12	25,4	22	0,165
02035-120750	75	18	20	M12	M12	25,4	22	0,250
02035-160320	32	25	20	M16	M16	31,2	27	0,150
02035-160500	50	25	30	M16	M16	31,2	27	0,250
02035-160750	75	25	30	M16	M16	31,2	27	0,370

Stützschrauben



Werkstoff:
Vergütungsstahl, vergütet.
Ausführung:
brüniert.
Bestellbeispiel:
nlm 02037-16016
Hinweis:
Durch die abgerundete Nase können die Stützschrauben auch als Positionierelement für Werkstücke mit Bohrungen verwendet werden.

Die Ausführung 02037-08016 hat einen Sechskant.

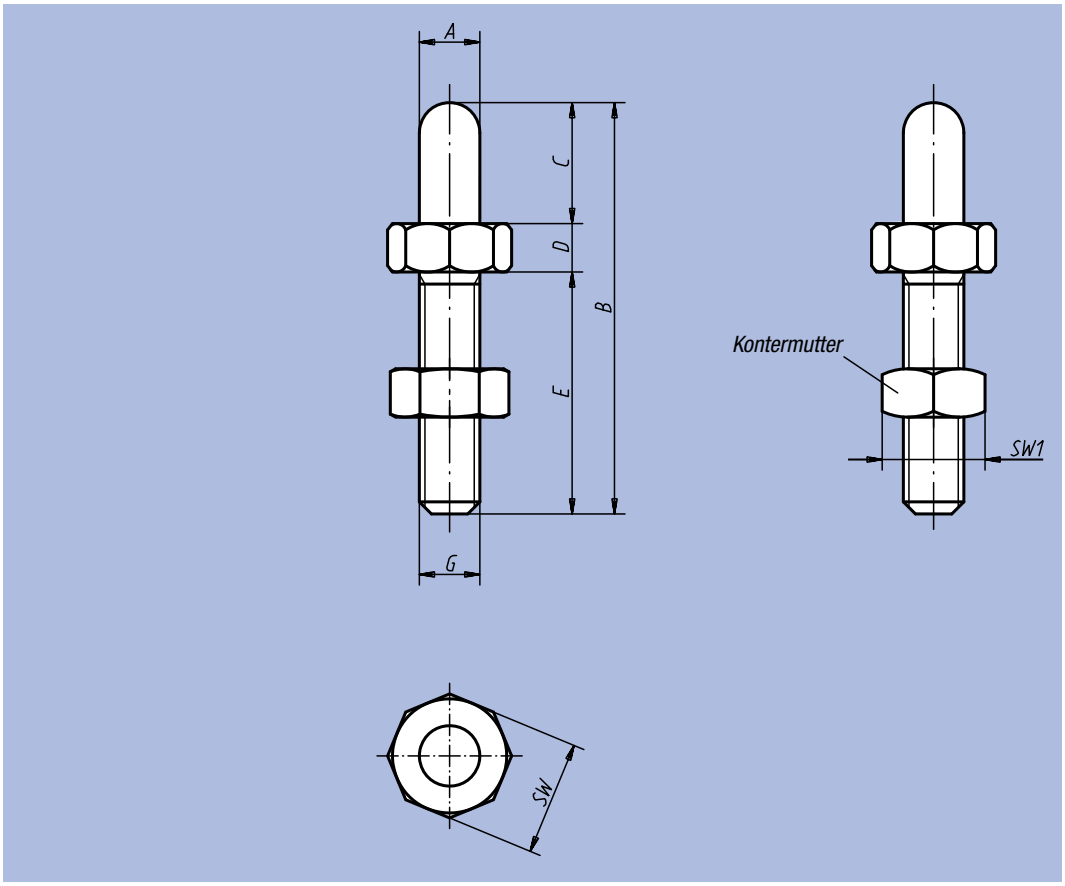

Bestellnummer	A	B	C	D	E	G	SW	SW1	kg
02037-06006	6	37	6	6	25	M6	13	10	0,011
02037-06012	6	43	12	6	25	M6	13	10	0,013
02037-08008	8	45	8	7	30	M8	13	13	0,040
02037-08016	8	53	16	7	30	M8	13	13	0,045
02037-10010	10	58	10	8	40	M10	17	17	0,060
02037-10020	10	68	20	8	40	M10	17	17	0,065
02037-12012	12	72	12	10	50	M12	19	19	0,110
02037-12024	12	84	24	10	50	M12	19	19	0,120
02037-16016	16	89	16	13	60	M16	24	24	0,240
02037-16032	16	105	32	13	60	M16	24	24	0,265
02037-20020	20	115	20	15	80	M20	36	30	0,350
02037-20040	20	135	40	15	80	M20	36	30	0,400

Positionsfüße



Werkstoff:
Automatenstahl.
Ausführung:
einsatzgehärtet und brüniert.
Bestellbeispiel:
nlm 02040-215
Hinweis:
Die Positionsfüße werden als Auflagen, Anschläge und Druckstücke im Vorrichtungsbau und allgemeinen Maschinen- und Gerätebau verwendet.

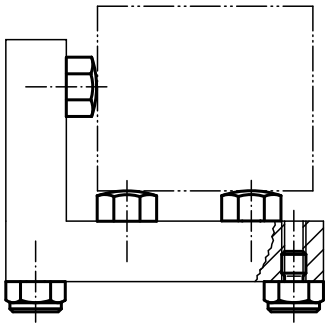

Form A
mit Außengewinde
und Planfläche

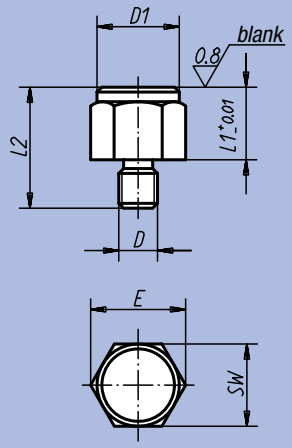

Form B
mit Außengewinde
und Kugelfläche

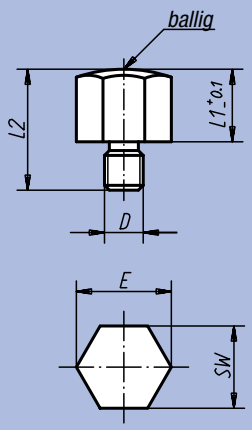

Form C
mit Außengewinde
und Riffelfläche

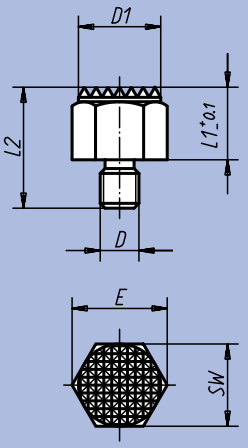

Form D
mit Innengewinde
und Planfläche

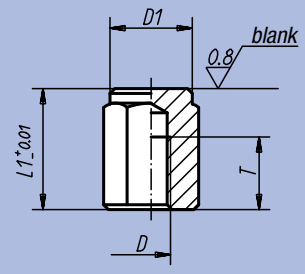

Form E
mit Innengewinde
und Kugelfläche

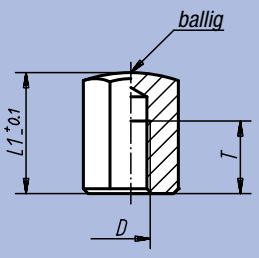

Form F
mit Innengewinde
und Riffelfläche

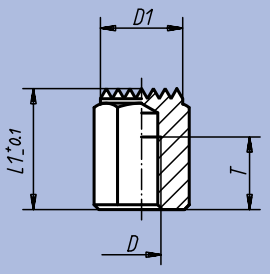

Bestellnummer Form A	Bestellnummer Form B	Bestellnummer Form C	D	L1	D1	L2	E	SW	kg
02040-1101	02040-2101	02040-3101	M8	10	17	20	19,4	17	0,024
02040-110	02040-210	02040-310	M12	10	22	24	25,2	22	0,040
02040-115	02040-215	02040-315	M12	15	22	29	25,2	22	0,056
02040-1151	02040-2151	02040-3151	M16	15	30	34	33	30	0,130
02040-1201	02040-2201	02040-3201	M16	20	30	39	33	30	0,155

Bestellnummer Form D	Bestellnummer Form E	Bestellnummer Form F	D	L1	D1	T	E	SW	kg
02040-415	02040-515	02040-615	M8	15	17	6	19,4	17	0,023
02040-4251	02040-5251	02040-6251	M8	25	17	16	19,4	17	0,040
02040-420	02040-520	02040-620	M12	20	22	10	25,2	22	0,052
02040-425	02040-525	02040-625	M12	25	22	15	25,2	22	0,065
02040-430	02040-530	02040-630	M12	30	22	20	25,2	22	0,077
02040-440	02040-540	02040-640	M12	40	22	25	25,2	22	0,105
02040-450	02040-550	02040-650	M12	50	22	25	25,2	22	0,135
02040-4301	02040-5301	02040-6301	M16	30	30	20	33	30	0,140
02040-4501	02040-5501	02040-6501	M16	50	30	25	33	30	0,250

Positionsfüße



Werkstoff:
Körper Vergütungsstahl.
Ausführung:
Körper vergütet und brüniert.
Auflageflächen einsatzgehärtet.
Bestellbeispiel:
nlm 02041-106010
Hinweis:
Die Positionsfüße werden zum Stützen von unbearbeiteten und bearbeiteten Werkstücken verwendet. Darüber hinaus dienen sie als Anschläge und Druckstücke im Vorrichtungs- und Werkzeugbau.

Form A
Planfläche gehärtet

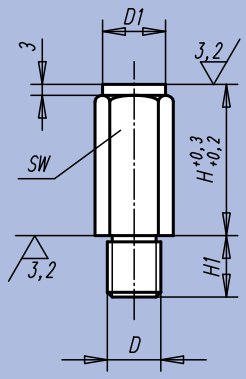

Form B
Planfläche geschliffen
und gehärtet

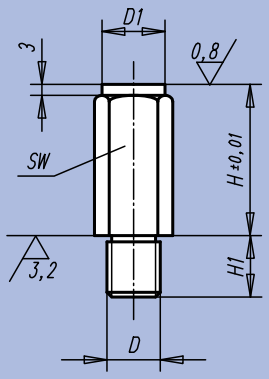

Form C
Kugelfläche gehärtet

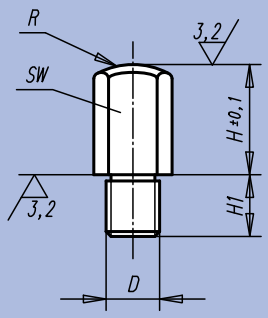

Form D
Riffelfläche vergütet

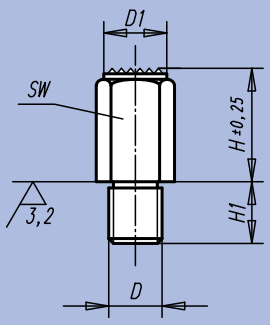

Bestellnummer Form A	Bestellnummer Form B	Bestellnummer Form C	Bestellnummer Form D	D	D1	H	H1	R	SW
02041-106010	02041-206010	02041-306010	02041-406010	M6	10	10	11	15	10
02041-106020	02041-206020	02041-306020	02041-406020	M6	10	20	11	15	10
02041-108010	02041-208010	02041-308010	-	M8	13	10	13	20	13
02041-108015	02041-208015	02041-308015	02041-408015	M8	13	15	13	20	13
02041-108030	02041-208030	02041-308030	02041-408030	M8	13	30	13	20	13
02041-110010	02041-210010	02041-310010	-	M10	17	10	16	30	17
02041-110020	02041-210020	02041-310020	02041-410020	M10	17	20	16	30	17
02041-110040	02041-210040	02041-310040	02041-410040	M10	17	40	16	30	17
02041-112010	02041-212010	02041-312010	-	M12	19	10	20	40	19
02041-112025	02041-212025	02041-312025	02041-412025	M12	19	25	20	35	19
02041-112050	02041-212050	02041-312050	02041-412050	M12	19	50	20	35	19
02041-116015	02041-216015	02041-316015	-	M16	27	15	24	50	27
02041-116030	02041-216030	02041-316030	02041-416030	M16	27	30	24	50	27
02041-116060	02041-216060	02041-316060	02041-416060	M16	27	60	24	50	27
02041-120040	02041-220040	02041-320040	02041-420040	M20	32	40	29	60	32
02041-120080	02041-220080	02041-320080	02041-420080	M20	32	80	29	60	32

Vorrichtungsfüße

mit Gewindezapfen



Werkstoff:
Vergütungsstahl 1.1181.
Ausführung:
brüniert.
Bestellbeispiel:
nlm 02050-10X75
(Höhe H mit angeben)

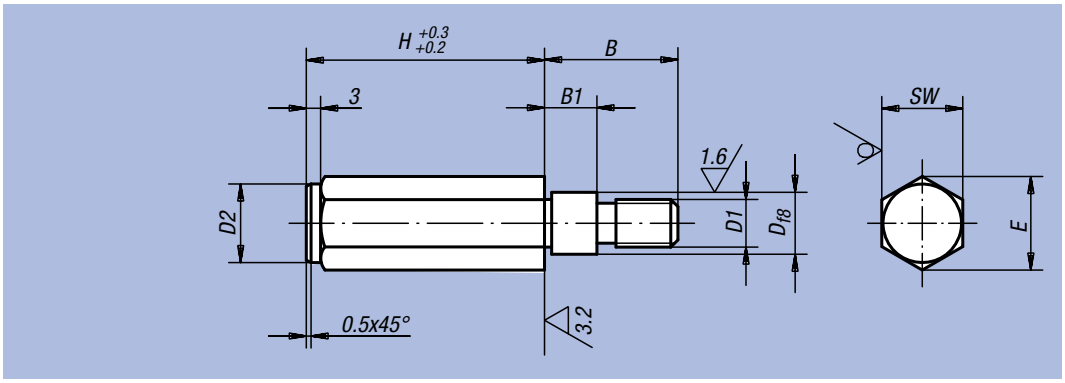

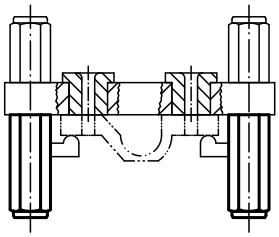

Bestellnummer	H	B	B1	D	D1	D2	E	SW
02050-10X	50 / 75 / 100	28	11	11	M10	16,5	19,5	17
02050-12X	50 / 75 / 100 / 125	35	18	13	M12	18,5	21,5	19

Anwendungsbeispiel einer Bohrvorrichtung

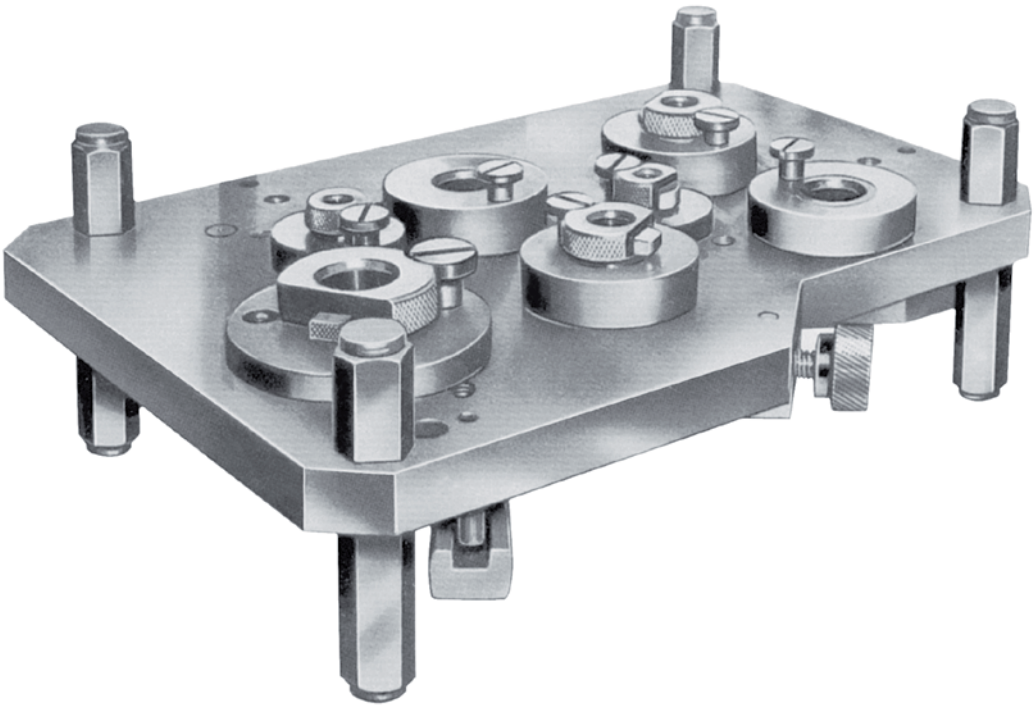

Vorrichtungsfüße

mit Innengewinde



Werkstoff:
Körper Vergütungsstahl.

Ausführung:
Körper vergütet und brüniert.
Auflageflächen einsatzgehärtet.

Bestellbeispiel:
nlm 02070-106X20

Hinweis:
Die Vorrichtungsfüße werden zum Stützen von unbearbeiteten und bearbeiteten Werkstücken und Vorrichtungen verwendet. Darüber hinaus dienen sie als Anschläge und Druckstücke im Vorrichtungs- und Werkzeugbau.

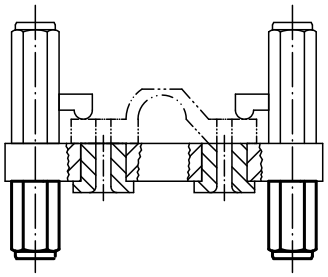

Form A
Planfläche gehärtet

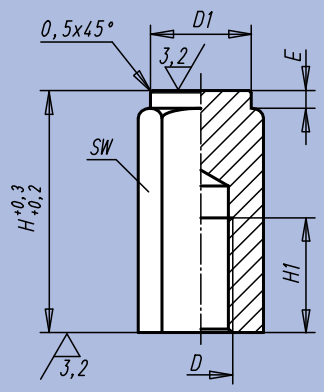

Form B
Planfläche geschliffen
und gehärtet

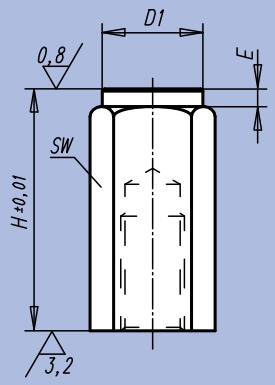

Form C
Kugelfläche gehärtet

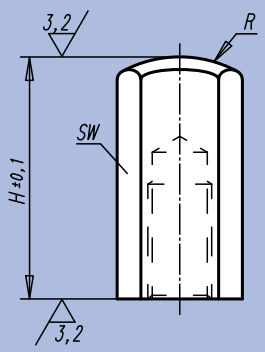

Form D
Riffelfläche vergütet

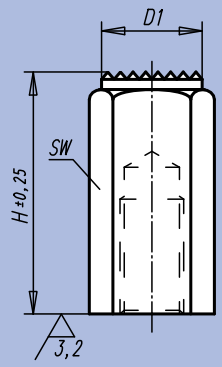

Bestellnummer Form A	Bestellnummer Form B	Bestellnummer Form C	Bestellnummer Form D	D	D1	E	H	H1	R	SW
02070-106X20	02070-206X20	02070-306X20	02070-406X20	M6	9,5	2	20	12	15	10
02070-106X40	02070-206X40	02070-306X40	02070-406X40	M6	9,5	2	40	12	15	10
02070-110X32	02070-210X32	02070-310X32	02070-410X32	M10	16,5	3	32	18	30	17
02070-110X63	02070-210X63	02070-310X63	02070-410X63	M10	16,5	3	63	18	30	17
02070-112X32	02070-212X32	02070-312X32	02070-412X32	M12	18,5	3	32	18	35	19
02070-112X63	02070-212X63	02070-312X63	02070-412X63	M12	18,5	3	63	18	35	19
02070-116X50	02070-216X50	02070-316X50	02070-416X50	M16	23	4	50	24	40	24
02070-116X100	02070-216X100	02070-316X100	02070-416X100	M16	23	4	100	24	40	24

Pendelauflagen

Neigungswinkel 12°



Werkstoff:
Körper Vergütungsstahl,
Kugel Kugellagerstahl 1.3505.

Ausführung:
Körper vergütet, Kugel gehärtet (50 - 55 HRC).

Bestellbeispiel:
nlm 02080-106

Hinweis:
Die Pendelauflagen dienen als Anschläge, Auflagen und Druckstücke im Vorrichtungsbau. Sie können auch in vorhandene Spannelemente eingebaut werden, siehe z. B.
04412 Spannelement ZHDS-1000,
04414 Hochdruck-Spannelement LHDS-2000 H,
04416 Spannelement LHDS-1000,
04430 Spannelement „arness“.

Kugel gegen Verdrehen gesichert.

Form C
mit Außengewinde
Kugel abgeflacht, plan

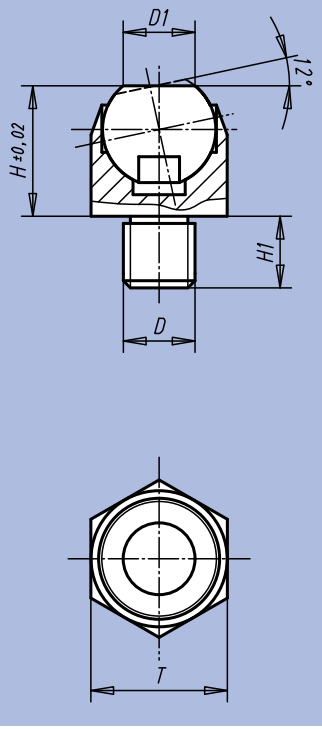

Form F
mit Außengewinde
Kugel abgeflacht, mit Riffelung

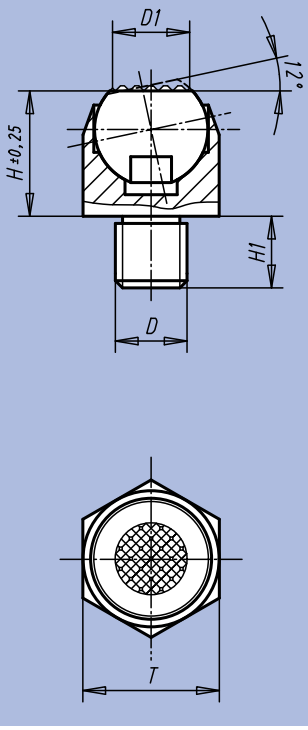

Bestellnummer	Form	D	D1	H	H1	Kugel-Ø	T	Belastbarkeit max. kN (nur bei statischer Belastung)	kg
02080-106	C	M6	6,7	13	7	10	13	10	0,015
02080-108	C	M8	6,7	13	8	10	13	10	0,020
02080-110	C	M10	10	18	10	16	19	25	0,035
02080-112	C	M12	10	18	12	16	19	25	0,045
02080-116	C	M16	20	27	16	24	30	90	0,160
02080-120	C	M20	20	27	20	24	30	90	0,180
02080-306	F	M6	6,7	13	7	10	13	10	0,015
02080-308	F	M8	6,7	13	8	10	13	10	0,020
02080-310	F	M10	10	18	10	16	19	25	0,035
02080-312	F	M12	10	18	12	16	19	25	0,045
02080-316	F	M16	20	27	16	24	30	90	0,160
02080-320	F	M20	20	27	20	24	30	90	0,180

Füße



Werkstoff:
Einsatzstahl 1.0301.
Ausführung:
einsatzgehärtet und brüniert.
Bestellbeispiel:
nlm 02090-08

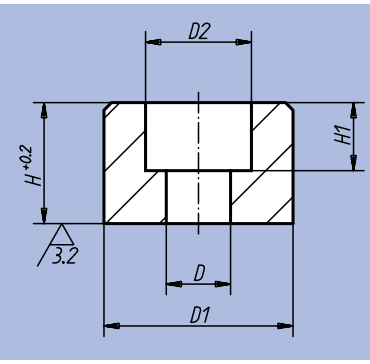

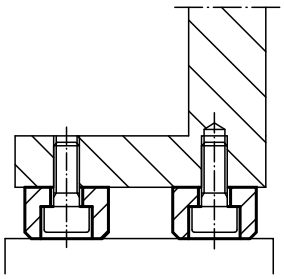

Bestellnummer	D	D1	D2	H	H1	kg
02090-05	5,5	16	10	10	5,7	0,012
02090-06	6,6	20	11	12	7	0,023
02090-08	9	25	15	16	9	0,048
02090-10	11	32	18	20	11	0,100
02090-12	13,5	36	20	25	13	0,156

Gelenkfüße



Werkstoff:
Kugelelement Automatenstahl, einsatzgehärtet.
Druckfuß Automatensonderstahl ETG 100.
Ausführung:
brüniert.
Bestellbeispiel:
nlm 02110-10

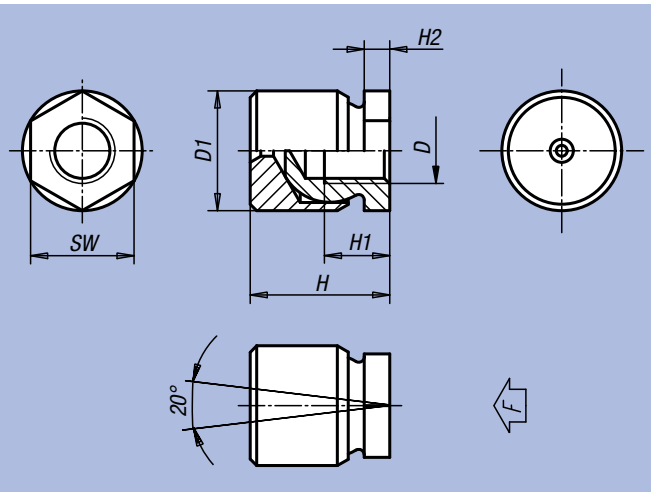

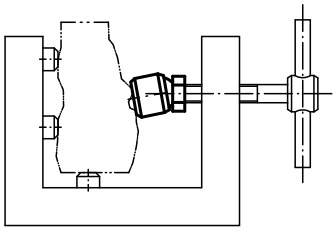

Bestellnummer	D	D1	H	H1	H2	SW	F max. N	kg
02110-05	M5	13	16,5	6,5	4	10	1620	0,012
02110-06	M6	13	16,5	8,5	4	10	2330	0,011
02110-08	M8	16	21	9	4	13	4150	0,023
02110-10	M10	19	23	10	4	17	6480	0,035
02110-12	M12	22	25,5	12	4,7	19	8320	0,052
02110-16	M16	25	29,5	14	5	24	13940	0,074
02110-20	M20	32	36	18	8,5	30	21000	0,138

Auflagestifte



Werkstoff:
Einsatzstahl 1.0301.
Ausführung:
einsatzgehärtet, brüniert und geschliffen.
Bestellbeispiel:
nlm 02130-05X8
(Höhe H mit angeben)

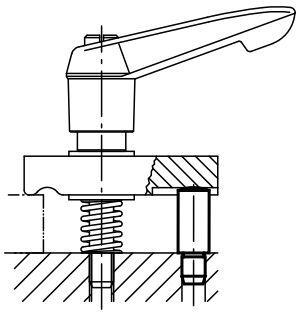

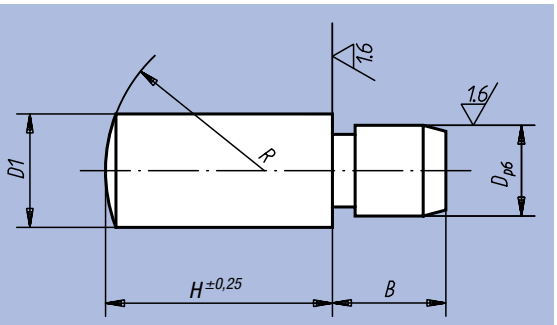

Bestellnummer	H	B	D	D1	R
02130-05X	8 / 10 / 12 / 16	5	4	5	7
02130-06X	10 / 12 / 16 / 20	6	5	6	8
02130-08X	12 / 16 / 20 / 25	8	6	8	11
02130-10X	16 / 20 / 25 / 32	10	8	10	14
02130-12X	20 / 25 / 32 / 40	12	10	12	16
02130-14X	20 / 25 / 32 / 40	14	12	14	20
02130-16X	25 / 32 / 40 / 50	16	14	16	25
02130-20X	25 / 32 / 40 / 50	20	16	20	28

Verstellbare Auflagebolzen

mit Gegenmutter



Werkstoff:
Vergütungsstahl 1.1181.
Ausführung:
randschichtgehärtet und brüniert.
Bestellbeispiel:
nlm 02150-05

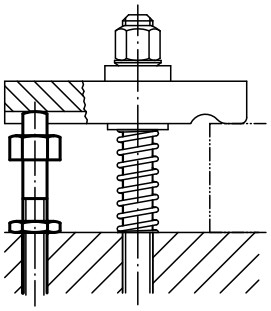

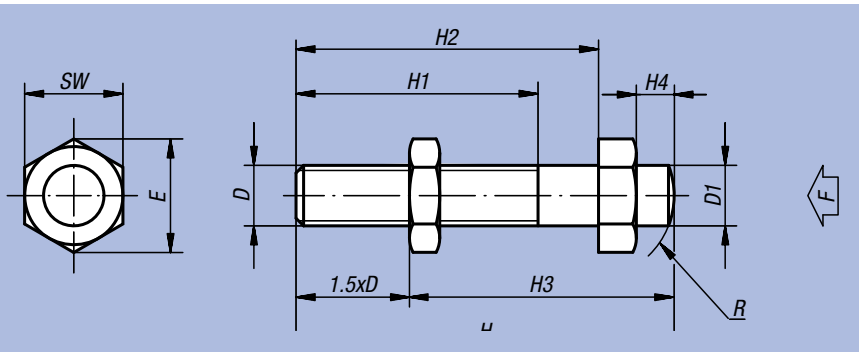

Bestellnummer	D	D1	H	H1	H2	H3 min.	H3 max.	H4	E	SW	R	F ca. N	kg
02150-05	M5	5	50	32	40	20,5	42,5	5	11,5	10	7	1000	0,019
02150-06	M6	6	50	32	40	21	41	5	11,5	10	8	1430	0,024
02150-08	M8	8	50	32	40	22	38	5	15	13	11	2620	0,028
02150-10	M10	10	52	32	40	25	37	5	19,6	17	14	4180	0,048
02150-101	M10	10	70	32	56	42	55	6	19,6	17	14	4180	0,054
02150-12	M12	12	70	40	56	36	52	6	21,9	19	16	6100	0,078
02150-121	M12	12	95	50	80	51	77	6	21,9	19	16	6100	0,098
02150-14	M14	14	100	63	80	44	79	8	25,4	22	20	8320	0,135
02150-16	M16	16	100	63	80	45	76	8	27,7	24	25	11520	0,178
02150-161	M16	16	120	63	100	65	96	8	27,7	24	25	11520	0,220
02150-20	M20	20	110	70	88	50	90	10	34,6	30	28	18000	0,260

Auflagebolzen



Werkstoff, Ausführung:
Vergütungsstahl, vergütet und brüniert.

Bestellbeispiel:
nlm 02153-16055

Hinweis:
Die Ausführungen 02153-12148 und 02153-16155 sind aus Messing.

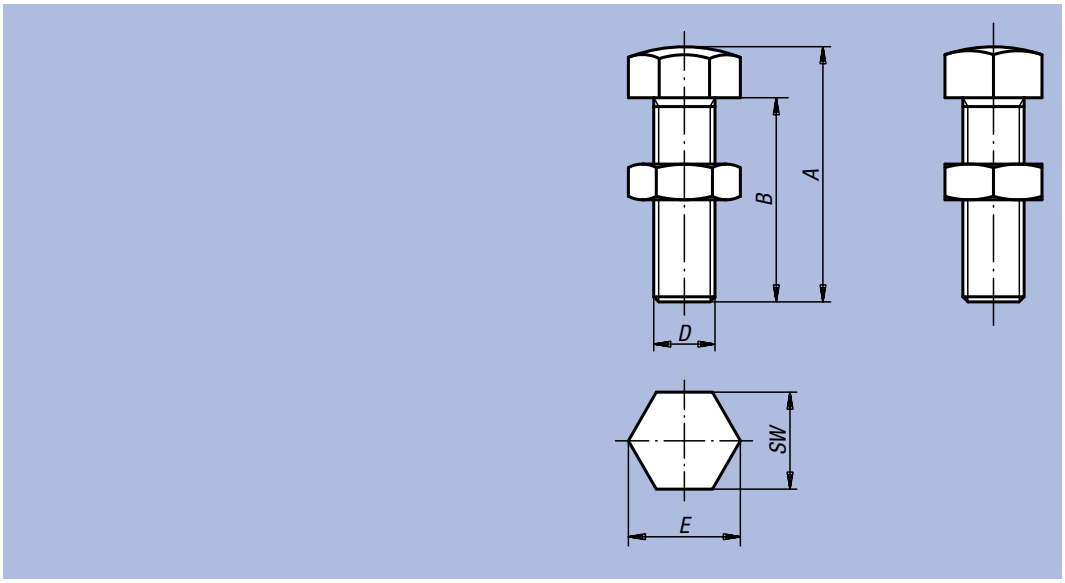

Bestellnummer	A	B	D	E	SW	kg
02153-06030	30	25	M6	11,5	10	0,007
02153-06040	40	35	M6	11,5	10	0,009
02153-06050	50	45	M6	11,5	10	0,011
02153-08036	36	30	M8	15	13	0,020
02153-08046	46	40	M8	15	13	0,019
02153-08056	56	50	M8	15	13	0,022
02153-10042	42	35	M10	19,6	17	0,040
02153-10048	48	40	M10	19,6	17	0,033
02153-10058	58	50	M10	19,6	17	0,038
02153-10068	68	60	M10	19,6	17	0,042
02153-12048	50	40	M12	21,9	19	0,055
02153-12070	70	60	M12	21,9	19	0,065
02153-12080	80	70	M12	21,9	19	0,070
02153-16055	55	45	M16	27,7	24	0,114
02153-16075	75	65	M16	27,7	24	0,125
02153-16085	85	75	M16	27,7	24	0,135
02153-12148	50	40	M12	21,9	19	0,061
02153-16155	55	45	M16	27,7	24	0,127

Stützen



Werkstoff:
Vergütungsstahl.
Ausführung:
brüniert.
Bestellbeispiel:
nlm 02155-0803006

Verstellbare Auflage, auf der verschiedene Aufsätze montiert werden können.

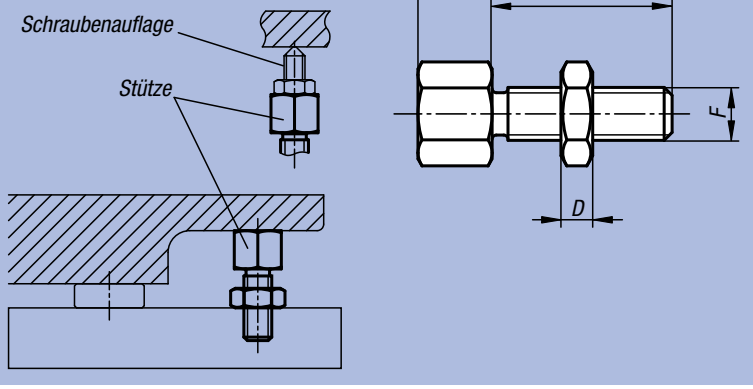

Bestellnummer	A	B	C	D	E	F	G	kg
02155-0803006	30	20	13	5	14,4	M8	M6x6	0,020
02155-0804006	40	30	13	5	14,4	M8	M6x6	0,025
02155-1003808	38	24	17	6	18,9	M10	M8x8	0,045
02155-1004808	48	34	17	6	18,9	M10	M8x8	0,050
02155-1205110	51	33	22	7	24,5	M12	M10x10	0,095
02155-1206610	66	48	22	7	24,5	M12	M10x10	0,110
02155-1606212	62	40	27	10	30,1	M16	M12x12	0,185
02155-1607712	77	55	27	10	30,1	M16	M12x12	0,210

Für Notizen:

Schraubböcke

mit flacher Auflage, Stahl



Werkstoff:
Vergütungsstahl.
Ausführung:
lackiert, Trapezgewinde selbsthemmend, Spindel mit Endsicherung.
Bestellbeispiel:
nlm 02170-02
Hinweis:
Die Ausführung 02170-01 besitzt kein Zentrierloch Ø 12.

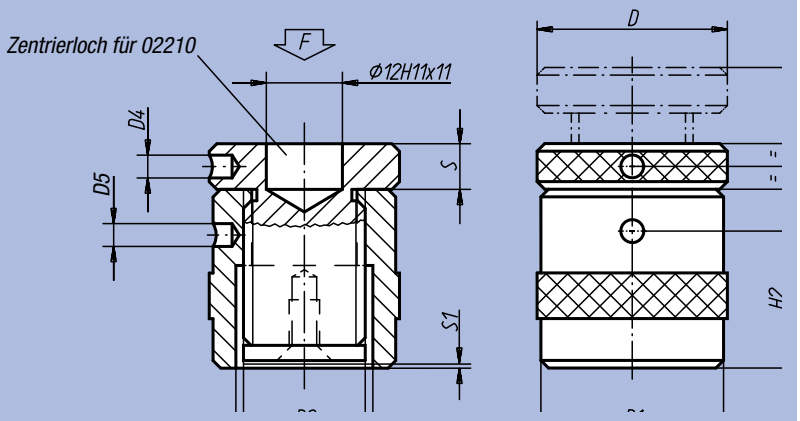

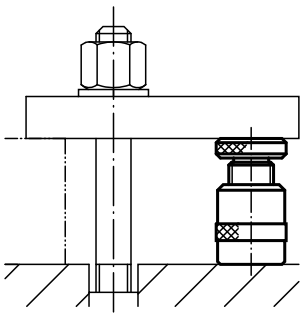

Bestellnummer	D	D1	D2	D3	D4	D5	H	H1	H2	S	S1	F max. kN	kg
02170-01	31	31	Tr 20 x 4	23	4	4	38	52	23	8	2	15	0,190
02170-015	50	49	Tr 30 x 4	36	6	6	42	52	24	12	2	60	0,550
02170-02	50	49	Tr 30 x 4	36	6	6	50	72	30	12	0,5	60	0,620
02170-03	50	49	Tr 30 x 4	36	6	6	71	102	43	16	1,5	60	0,900
02170-04	65	70	Tr 40 x 7	43	6	6	100	140	58	25	2,5	100	2,635
02170-05	70	80	Tr 50 x 8	55	6	6	140	212	90	30	4	170	4,600
02170-06	80	100	Tr 65 x 10	70	6	8	190	300	126	34	5	350	9,000

Schraubböcke

mit flacher Auflage, Aluminium



Werkstoff:
Aluminium (400 N/mm² Zugfestigkeit). Spindel Vergütungsstahl.
Ausführung:
Trapezgewinde selbsthemmend, Spindel mit Endsicherung.
Bestellbeispiel:
nlm 02180-01

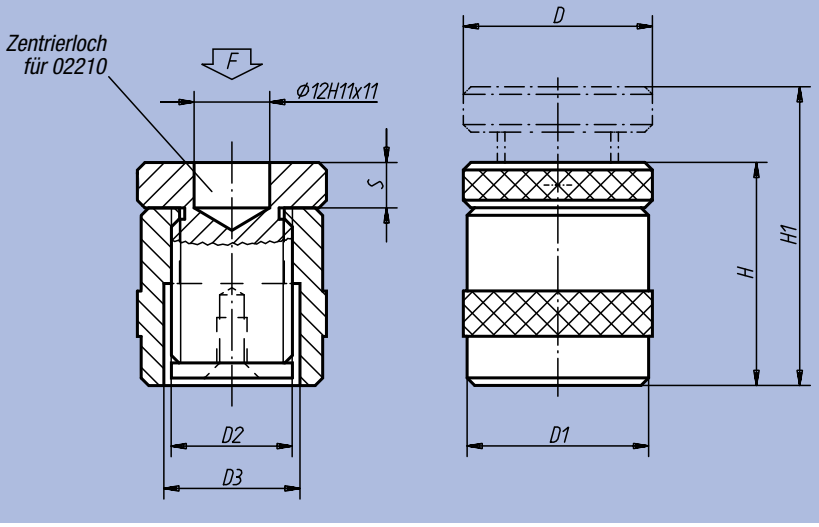

Bestellnummer	D	D1	D2	D3	H	H1	S	F max. kN	kg
02180-01	50	50	Tr 30 x 4	36	42	52	12	30	0,370
02180-02	50	50	Tr 30 x 4	36	50	70	12	30	0,430
02180-03	50	50	Tr 30 x 4	36	70	100	12	30	0,600

Magnetschraubböcke

mit flacher Auflage, Aluminium



Werkstoff:
Aluminium (400 N/mm² Zugfestigkeit).
Spindel Vergütungsstahl.

Ausführung:
Trapezgewinde selbsthemmend,
Spindel mit Endsicherung.

Bestellbeispiel:
nlm 02182-01

Hinweis:
Für horizontale und vertikale Anwendungen geeignet. Mit dem Magnetfuß kann eine andauernde und exakte Positionierung des Werkstückes in vertikaler Stellung erzielt werden.

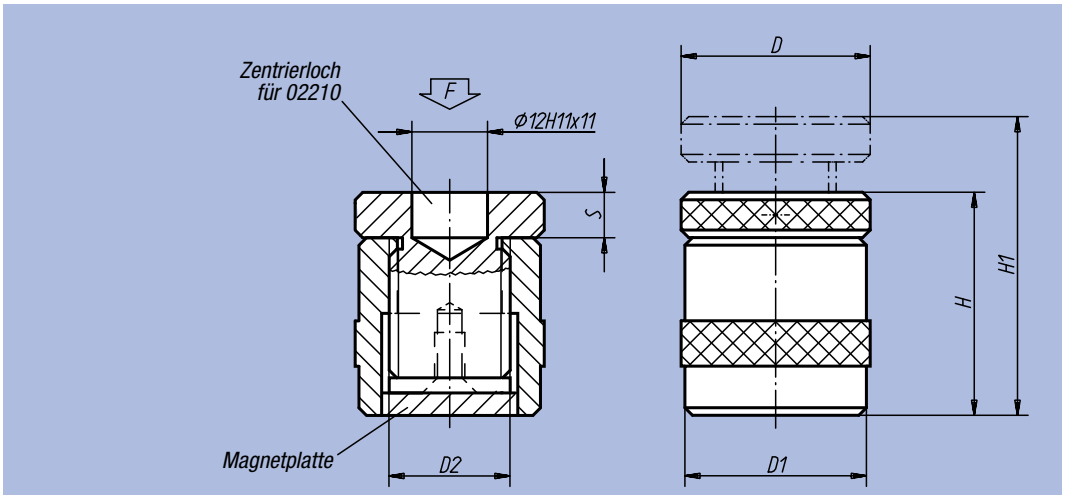

Bestellnummer	D	D1	D2	H	H1	S	F max. kN	kg
02182-01	50	50	Tr 30 x 4	52	62	12	30	0,380
02182-02	50	50	Tr 30 x 4	60	80	12	30	0,550
02182-03	50	50	Tr 30 x 4	80	110	12	30	0,710

Atlas-Schraubböcke

mit Gegenmutter



Werkstoff:
Vergütungsstahl.

Ausführung:
hammerschlaglackiert, Spindel mit Trapezgewinde 30 x 6.

Bestellbeispiel:
nlm 02190-03

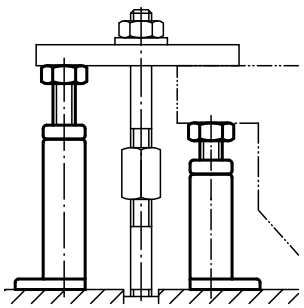

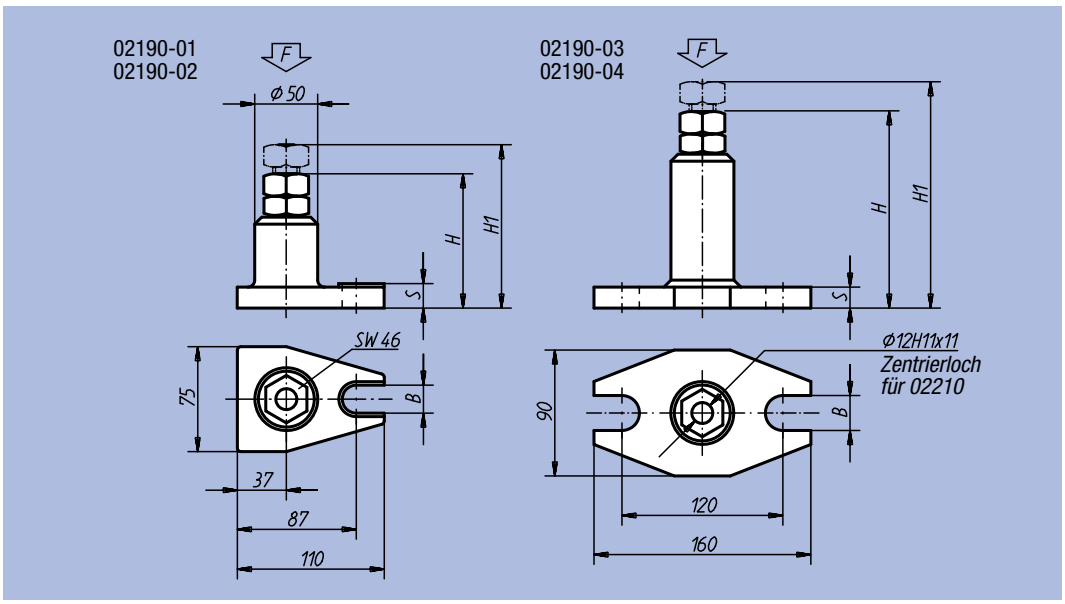

Bestellnummer	Verstellbereich	Grundplatte	H	H1	B	S	F kN	kg
02190-01	100 - 140	76x111	100	140	18	17	60	1,750
02190-02	140 - 200	76x111	140	200	18	17	60	2,200
02190-03	200 - 320	90x160	200	320	22	22	40	3,400
02190-04	320 - 540	90x160	320	540	22	25	25	5,100

Kugelaufsatz, Zentrierplatte, Prismaaufsätze, Fixieraufsätze, Aufsatz mit drehbarer Kugel



Werkstoff:
Vergütungsstahl.
Ausführung:
vergütet und brüniert.
Kugel gehärtet.
Bestellbeispiel:
nlm 02210-021
Hinweis:
Verwendbar bei
02170
02180
02182
02190
02320
02330-020
02350-010

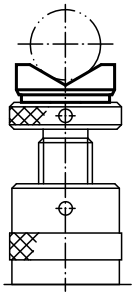

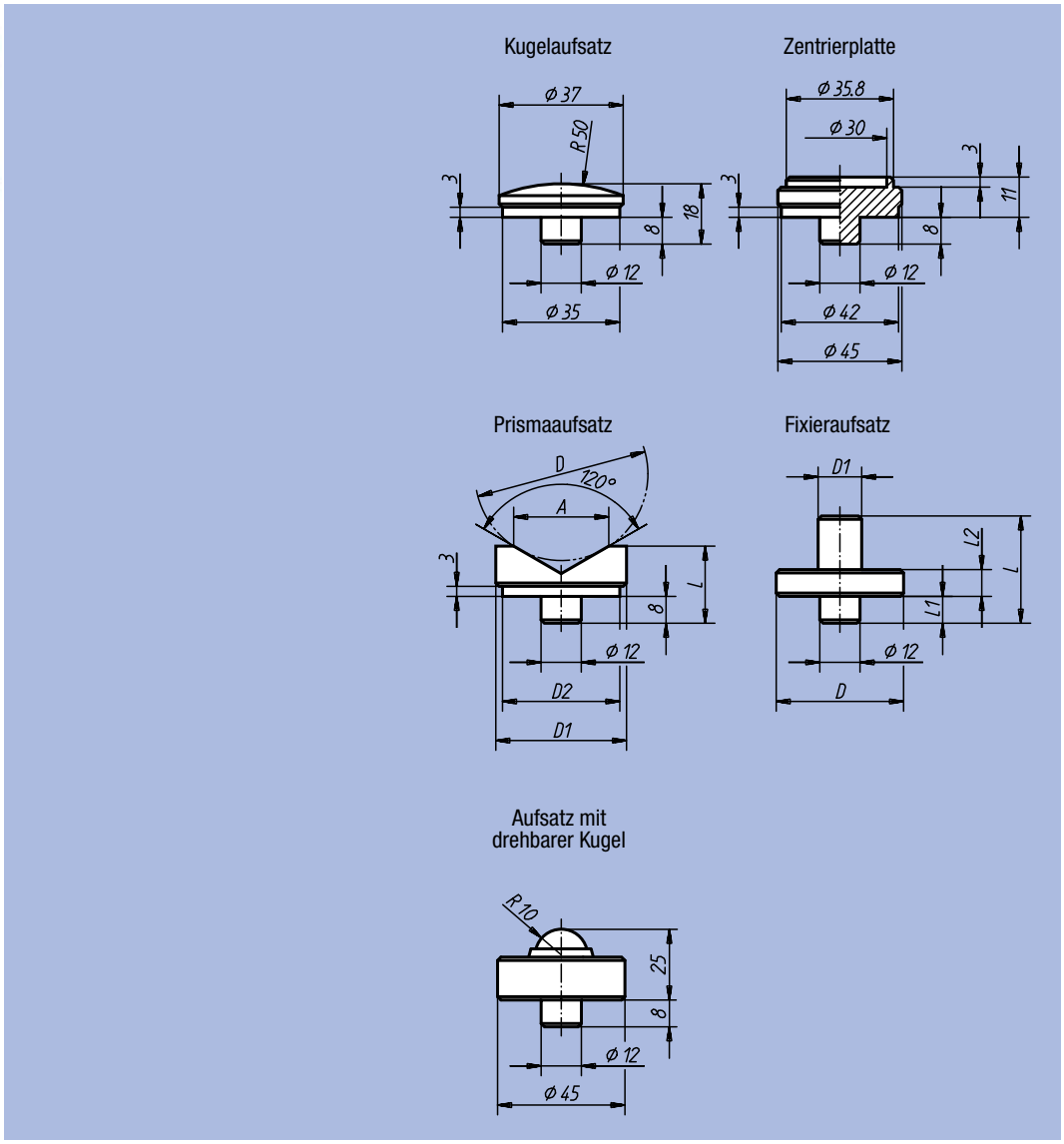

Bestellnummer	Ausführung	kg
02210-01	Kugelaufsatz	0,090
02210-03	Zentrierplatte	0,120

Bestellnummer	Ausführung	D min.	D max.	D1	D2	L	A	kg
02210-02	Prismaaufsatz	10	50	45	42	23	32	0,120
02210-021	Prismaaufsatz	22	100	65	62	38	56	0,545

Bestellnummer	Ausführung	D	D1	L	L1	L2	kg
02210-04	Fixieraufsatz	63	14	40	8	12	0,325
02210-041	Fixieraufsatz	78	25	53	8	15	0,715

Bestellnummer	Ausführung	F max. kN	kg
02210-05	Aufsatz mit drehbarer Kugel	30	0,240

Kompaktspannblöcke

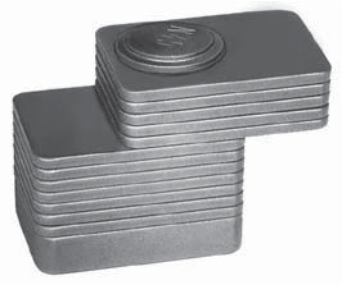

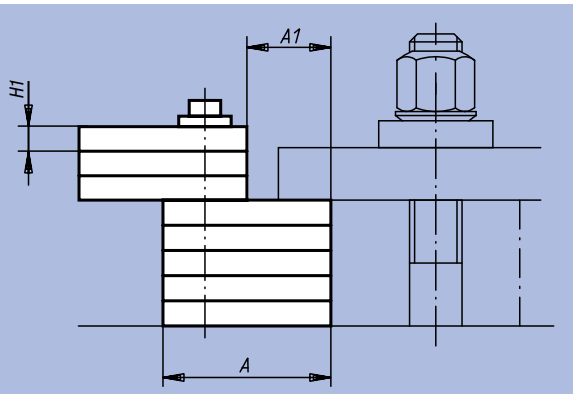

Werkstoff:
Kompaktspannblöcke Vergütungsstahl.

Ausführung:
Kompaktspannblöcke vergütet.

Bestellbeispiel:
nlm 02240-75

Hinweis:
Kompaktspannblöcke sind Einheiten von Unterlegplatten aus Stahl, die durch eine Achse fest miteinander verbunden sind. Die Platten sind einzeln drehbar und rasten bei 90° ein; dadurch ist horizontaler und vertikaler Einsatz möglich.
Jede benötigte Abstützhöhe ist mit einem Griff einstellbar. Alle Größen sind kombinierbar.

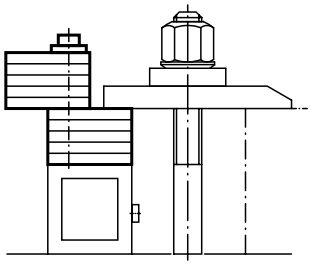

Bestellnummer	Ausführung	max. Spannhöhe	Spannstufen	H1	Grundfläche A x B	Spannfläche A1 x B	▫ kg
02240-30	Kompakt-Spannblock	30	11	2	50x35	20x35	0,380
02240-46	Kompakt-Spannblock	46	13	3	50x35	20x35	0,600
02240-85	Kompakt-Spannblock	85	26	3	50x35	20x35	1,100
02240-50	Kompakt-Spannblock	48	11	4	60x50	26x50	1,150
02240-102	Kompakt-Spannblock	102	24	4	60x50	26x50	2,330
02240-75	Kompakt-Spannblock	77	14	5	90x80	40x80	4,000
02240-150	Kompakt-Spannblock	153	29	5	90x80	40x80	8,150
02240-35	Kompakt-Spannblock mit Magnetgrundplatte	35	11	2	50x35	20x35	0,400
02240-51	Kompakt-Spannblock mit Magnetgrundplatte	51	13	3	50x35	20x35	0,650
02240-55	Kompakt-Spannblock mit Magnetgrundplatte	55	11	4	60x50	26x50	1,200

Universal-Spannunterlagen



Werkstoff:
Vergütungsstahl.
Ausführung:
lackiert.
Bestellbeispiel:
nlm 02270-02
Hinweis:
Eine Zusammenstellung dieser Universal-Spannunterlagen finden Sie unter 02310.
Universal-Spannunterlagen sind auch in Verbindung mit Treppenzahn-Spanneisen 04070 verwendbar.

Stufenhöhe senkrecht: 4,65 mm
Stufenhöhe waagrecht: 2,3 mm

Anwendungsbeispiel:

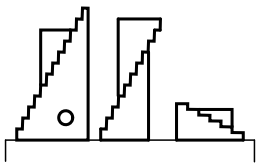

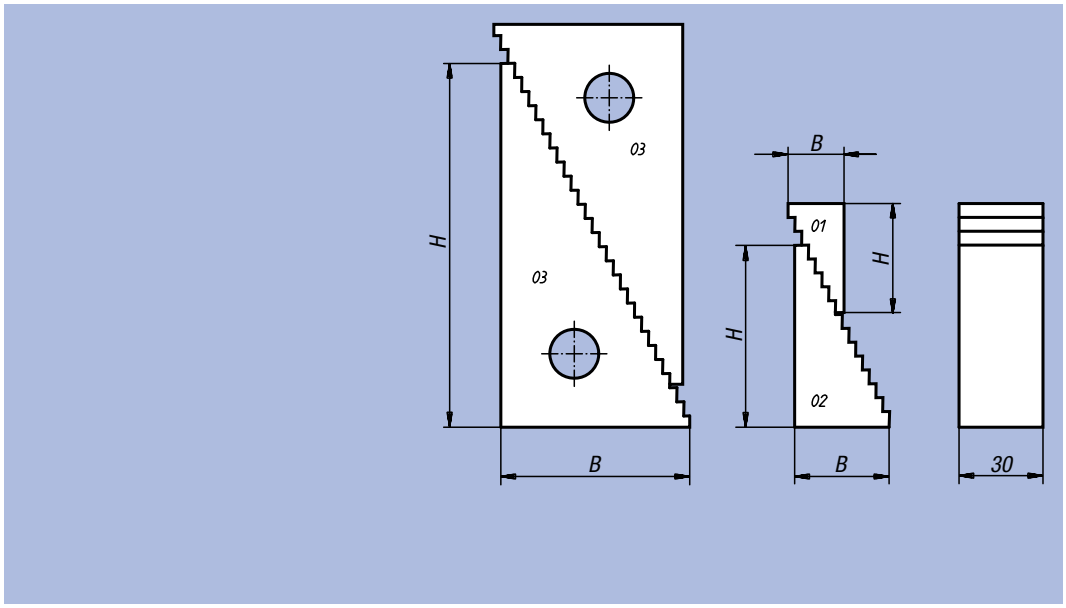

Bestellnummer	B	H	Auflagenhöhe min.	Auflagenhöhe max.	kg je Paar
02270-01	19	32	22	51	0,180
02270-02	35,5	65	39	107	0,600
02270-03	68	130	71	208	2,100

Universal-Spannunterlagensatz

Werkstoff:
Vergütungsstahl.
Ausführung:
lackiert.
Bestellbeispiel:
nlm 02310-01
Hinweis:
Die Spezialverzahnung ermöglicht die Verwendung dieser Spannunterlagen in vertikaler und horizontaler Lage.
Der komplette Satz im Holzkasten besteht aus 20 Teilen, die untereinander auswechselbar sind und viele Anwendungsmöglichkeiten ergeben.
Diese Spannunterlagen können auch einzeln bezogen werden. Siehe 02270.
Universal-Spannunterlagen sind auch in Verbindung mit Treppenzahn-Spanneisen 04070 verwendbar.

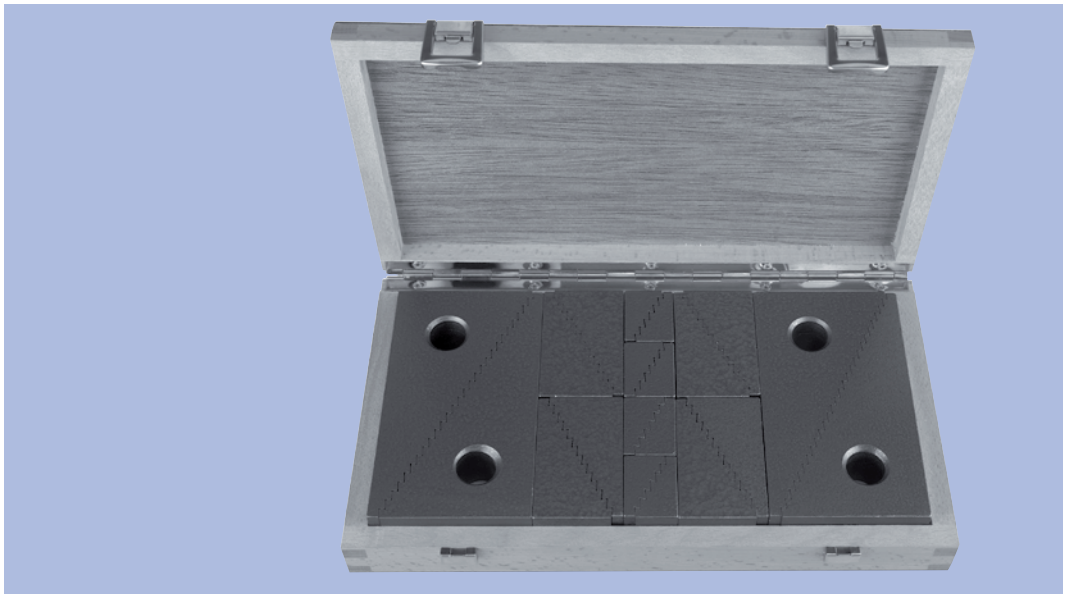

Bestellnummer	Inhalt	Auflagenhöhe mm	Kastengröße mm	kg
02310-01	8 Stück Nr. 01 8 Stück Nr. 02 4 Stück Nr. 03	von 22 bis 208	280 x 155 x 40	7

Höhenkeile



Werkstoff:
Vergütungsstahl und Sphäroguss.
Ausführung:
vergütet und brüniert.
Keilflächen fein bearbeitet.
Bestellbeispiel:
nlm 02320-50
Hinweis:
Feinfühliges Verstellen durch Rändelschraube oder Sechskantstiftschlüssel. Dadurch vertikale Bewegung ohne seitliches Verschieben. Besonders geeignet zum Anreißen oder Bearbeiten schwerer Teile. Ein Kugelaufsatz 02210-01 wird jedem Höhenkeil beigelegt.

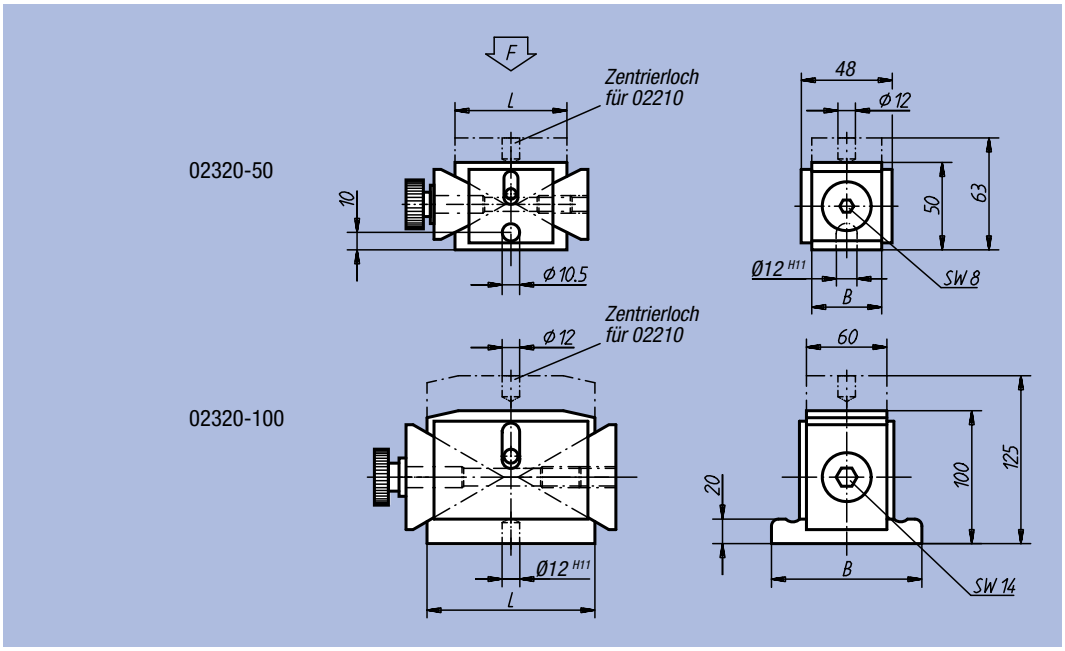

Bestellnummer	Spannbereich	L	B	Höhenverstellung pro Spindelumdrehung	F kN	kg
02320-50	50 - 63	63	40	0,86	40	1,3
02320-100	100 - 125	125	115	1,16	100	8,6

Abstützelemente zylindrisch



Werkstoff:
Vergütungsstahl 1.1181.
Ausführung:
brüniert.
Bestellbeispiel:
nlm 02330-40

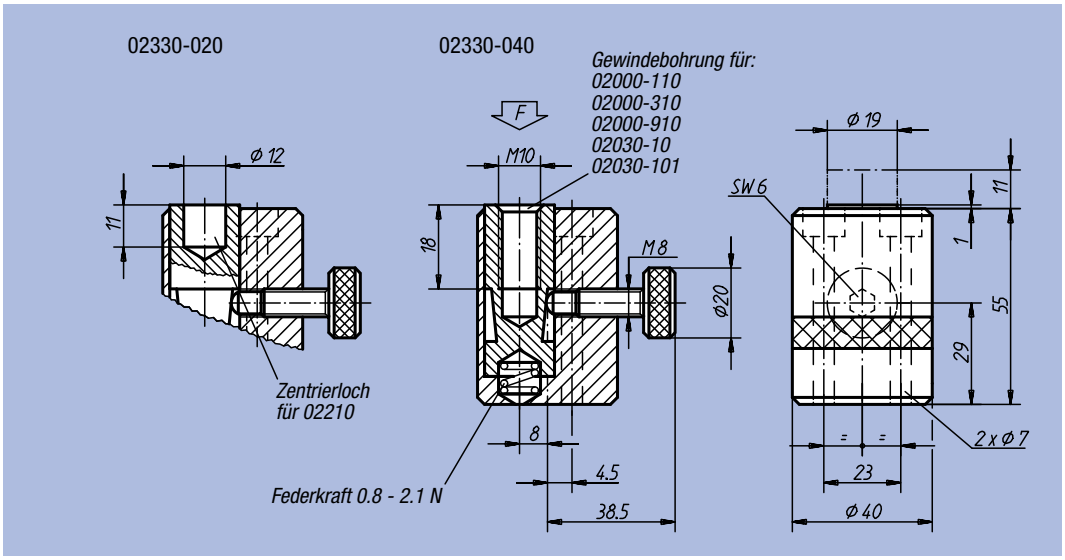

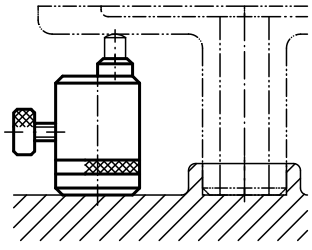

Bestellnummer	F max. N	kg
02330-020	4000	0,6
02330-040	4000	0,6

Abstützelemente verstellbar



Werkstoff:
Vergütungsstahl.
Ausführung:
Grundkörper brüniert.
Auflagebolzen gehärtet und brüniert.
Bestellbeispiel:
nlm 02333-08023

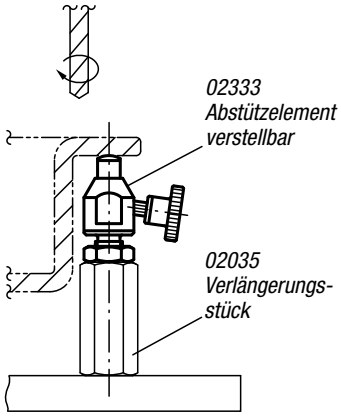

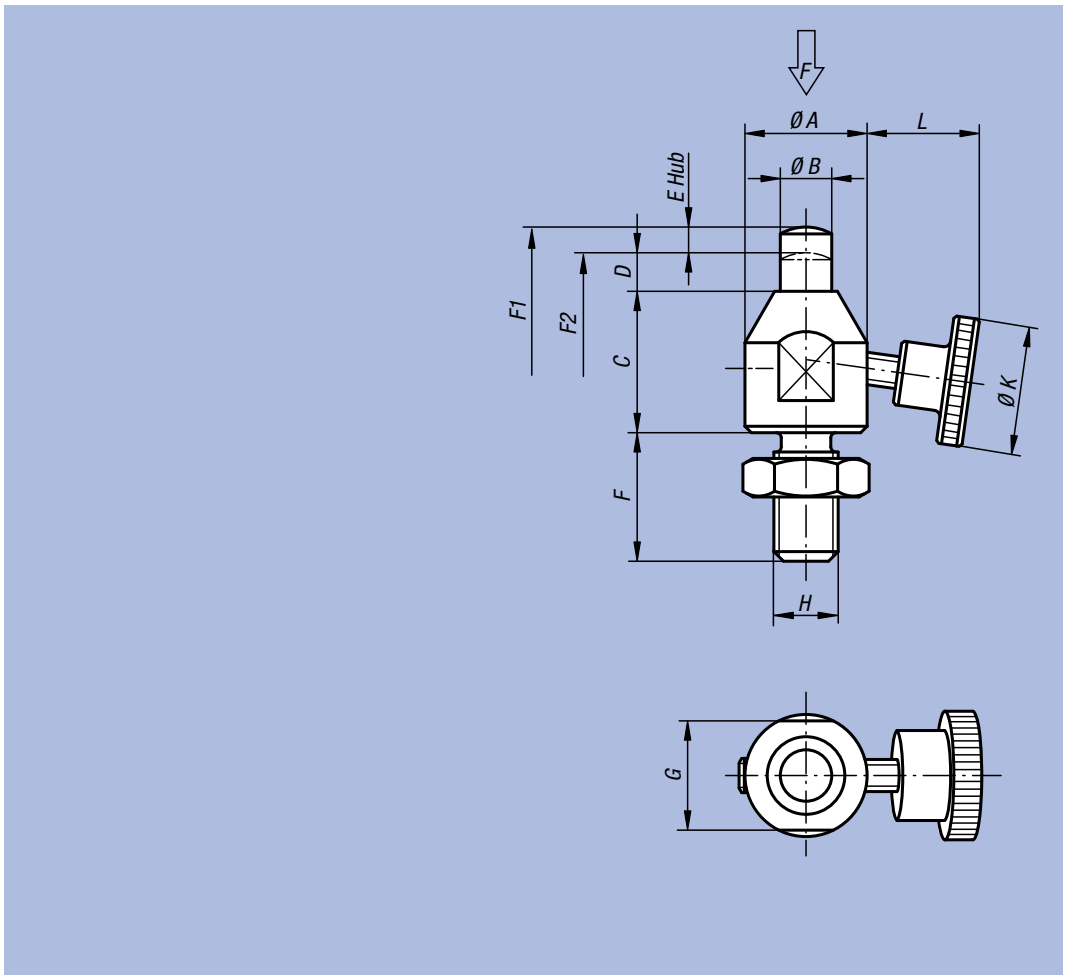

Bestellnummer	A	B	C	D	E	F	G	H	K	L	F N	Federkraft Anfang F1 ca. N	Federkraft Ende F2 ca. N	kg
02333-08023	15	6	18	5	3	16	13	M8	20	13,2	200	1,5	3	0,036
02333-10028	19	8	22	6	4	20	17	M10	25	16,3	300	1,8	3	0,072
02333-12031	22	10	25	6	4	24	19	M12	28	22,3	400	1,8	3	0,150

Abstützelemente



Werkstoff:
Vergütungsstahl.
Ausführung:
Grundkörper brüniert.
Druckbolzen vergütet und brüniert.
Bestellbeispiel:
nlm 02334-06029

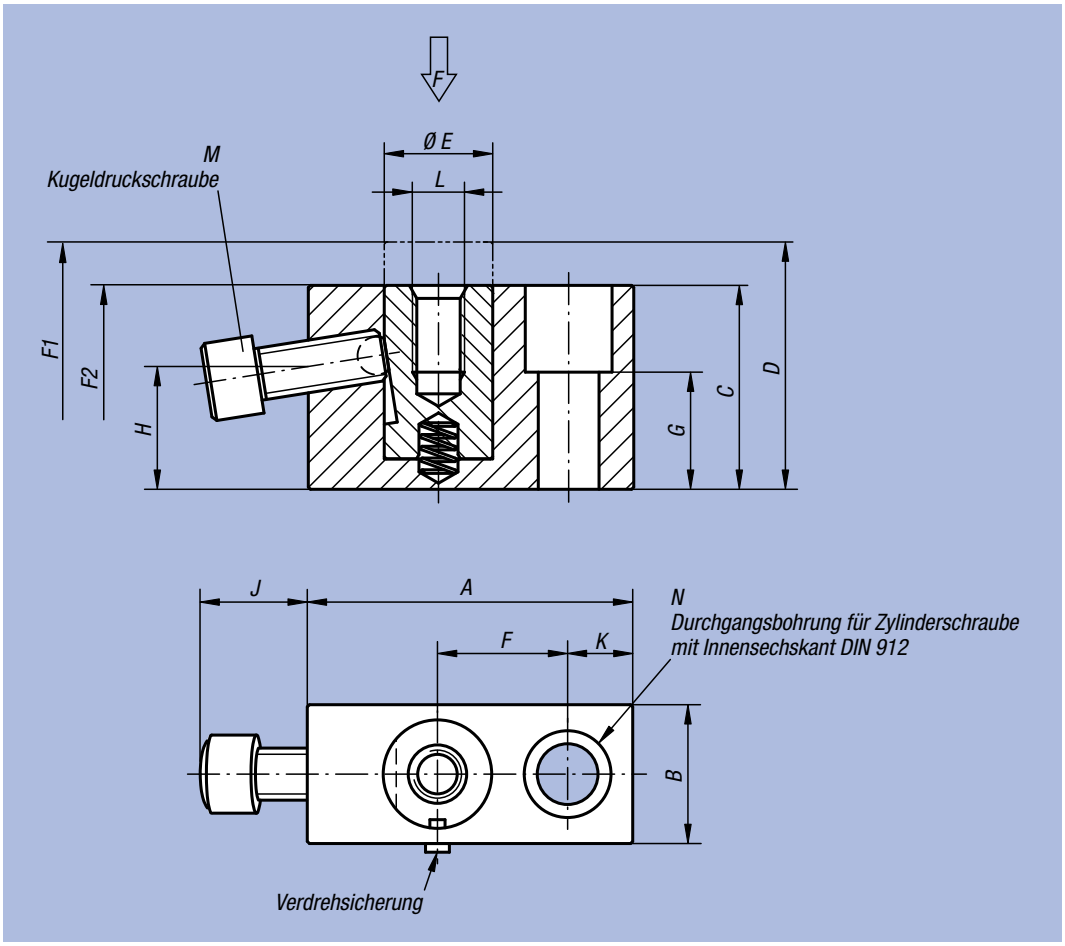

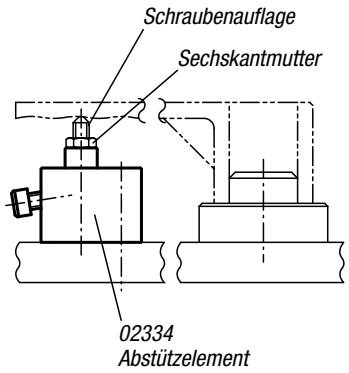

Bestellnummer	A	B	C	D	E	F	G	H	J	K	L	M	N	F N	Federkraft Anfang F1 ca. N	Federkraft Ende F2 ca. N	kg
02334-06029	38	19	29	35	12	15	15	17,6	13	8	M6x10	M6x16	M6	4000	0	6	0,150
02334-08037	50	22	37	47	16	20	20	21,1	16	10	M8x15	M8x20	M8	6000	0	7	0,285
02334-12047	75	32	47	57	25	30	27	28,3	25	15	M12x20	M12x30	M12	9000	1	11	0,800

Abstützzylinder



Werkstoff:
Vergütungsstahl.
Ausführung:
Grundkörper brüniert.
Druckbolzen gehärtet und brüniert.
Bestellbeispiel:
nlm 02335-06039

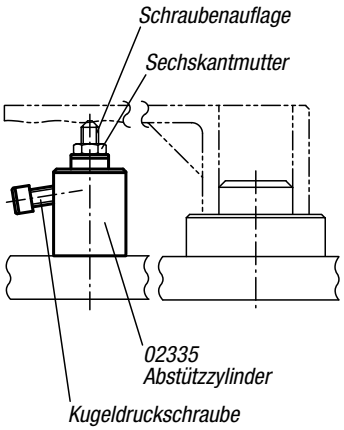

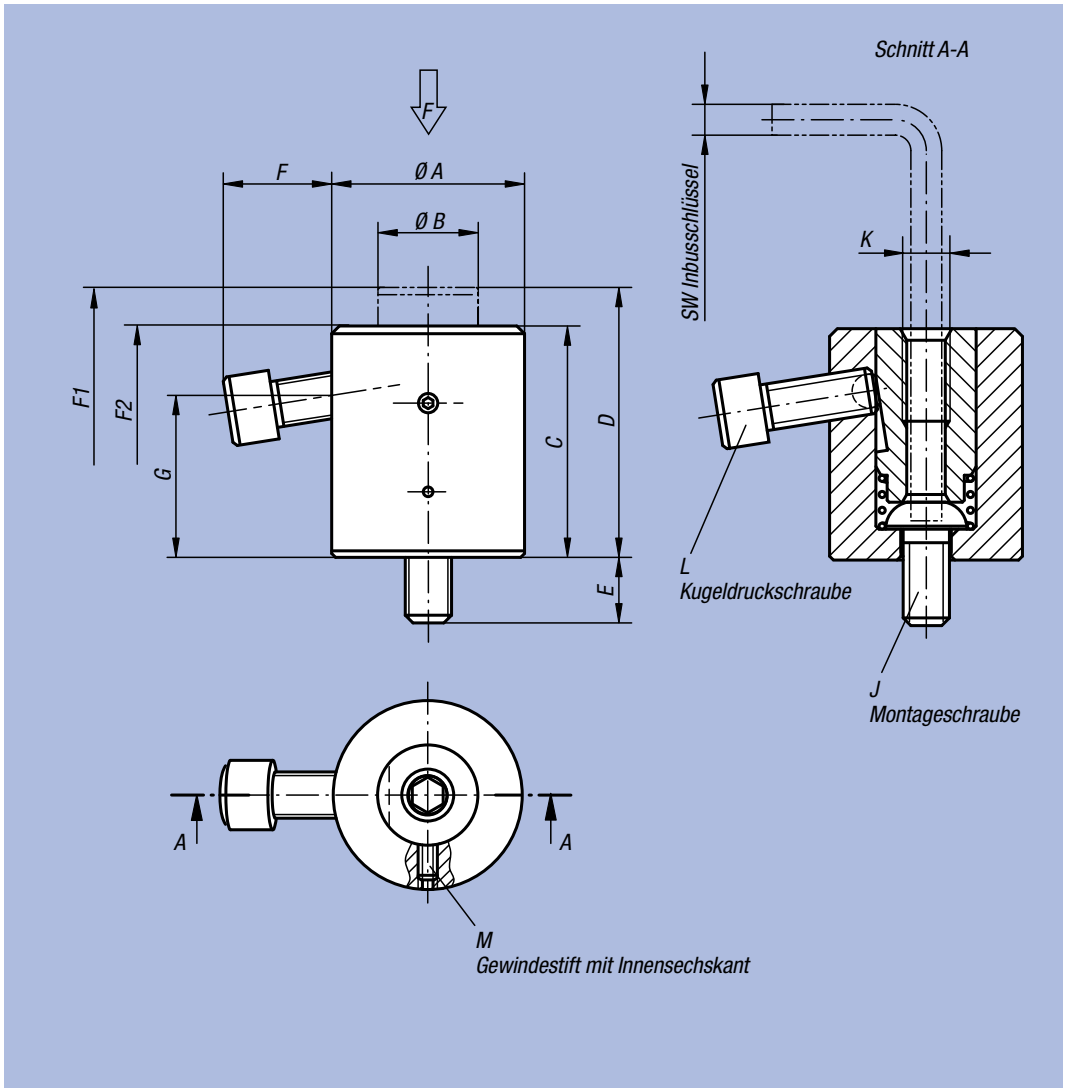

Bestellnummer	A	B	C	D	E	F	G	J	K	L	M	SW	F N	Federkraft Anfang F1 ca. N	Federkraft Ende F2 ca. N	kg
02335-06039	28	14	33	39	10	13,1	22,2	M6	M6x12	M6x16	M4x8	4	4000	10	22	0,150
02335-08052	35	19	42	52	14	17,2	27,5	M8	M8x16	M8x20	M4x8	5	6000	10	27	0,300
02335-12070	50	26	60	70	16	28,1	42,1	M12	M12x24	M12x30	M5x12	8	9000	15	30	0,865
02335-16080	60	33	70	80	22	26,6	47,4	M16	M16x32	M12x30	M5x15	10	9000	15	35	1,390

Abstützelement



Werkstoff:
Grundkörper Einsatzstahl.
Gehäuse Aluminium.

Ausführung:
Grundkörper nitriert, manganphosphatiert und geschliffen.
Gehäuse rot eloxiert.

Bestellbeispiel:
nlm 02340-0508

Hinweis:
Das Abstützelement dient zum Abstützen von überbestimmten Spannstellen an Bauteilen. Es verhindert Vibrationen und Durchbiegungen während der Bearbeitung.

Betätigungsweise:
1. Durch Drehen des Spannnockens (Innensechskant SW 6) an der Mantelfläche der roten Schutzhülse legt sich der Stützbolzen mit leichter Federkraft an das Werkstück an.
2. Durch Weiterdrehen bis zum Anschlag (lock) klemmt der Spannmechanismus den Stützbolzen ohne Positionsänderung.
3. Beim Drehen in umgekehrter Richtung (unlock) löst sich die Klemmung. Bei weiterem Zurückdrehen bis zum Anschlag fährt der Stützbolzen in Endstellung.

Montage:
Abstützelement mit Anschlussgewinde M6 auf Vorrichtung befestigen.
Alternativ: Gewindestift M12x10 durch Gewindestift M12x30 ersetzen und das Abstützelement mit Schlüssel (SW 21) montieren (z.B. für T-Nuten Befestigung).
Für eine sichere Funktion muss die Gewindebohrung M12 immer geschlossen sein.
Ein Versenken des Abstützelements um 16 mm ist möglich.
Das Gewinde M8 kann mit verschiedenen Auflagebolzen versehen werden.
Lieferung mit Gewindestift M12x30 und Mutter für T-Nuten M12x14 (DIN 508).

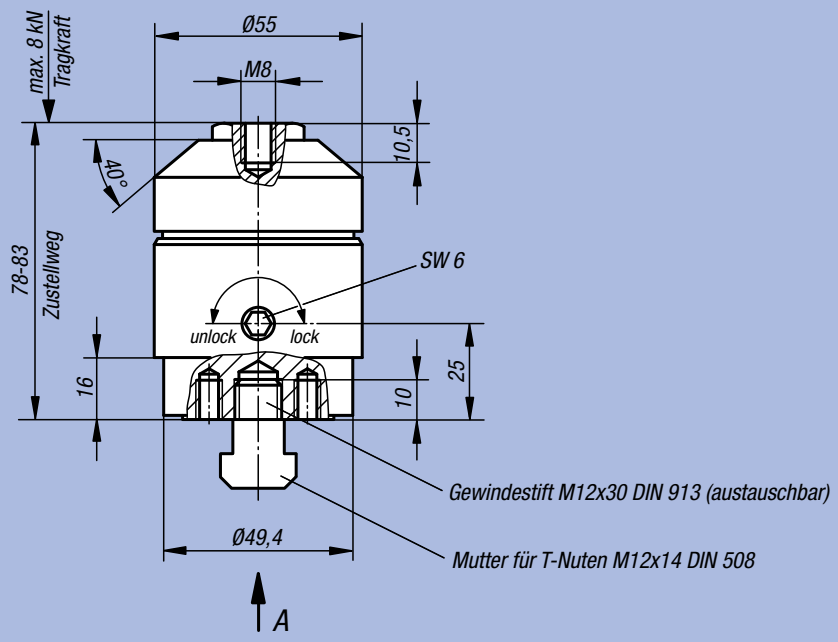

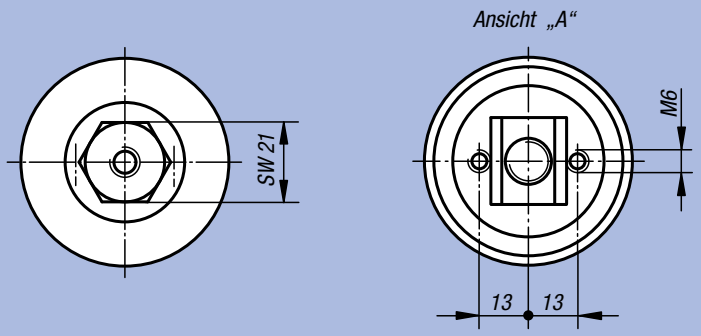

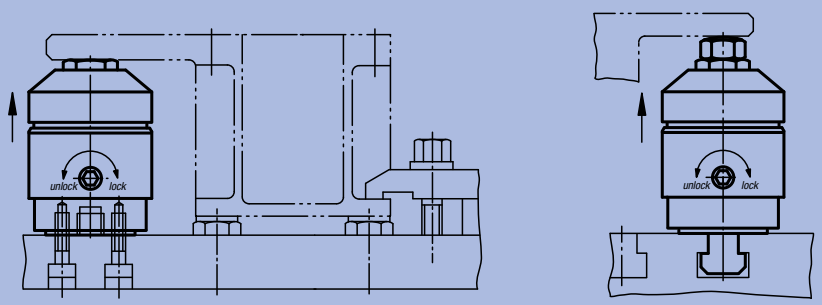

Bestellnummer	Tragkraft N	Zustellweg	kg
02340-0508	8000	5	0,939

Abstützelemente rechteckig



Werkstoff:
Gehäuse GJL 250, Druckbolzen und Verriegelungsteile Vergütungsstahl.
Ausführung:
Gehäuse lackiert, Stahlteile brüniert.
Bestellbeispiel:
nlm 02350-030

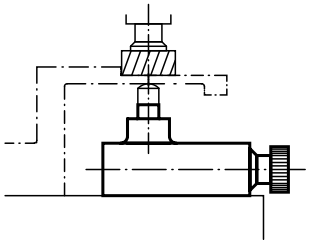

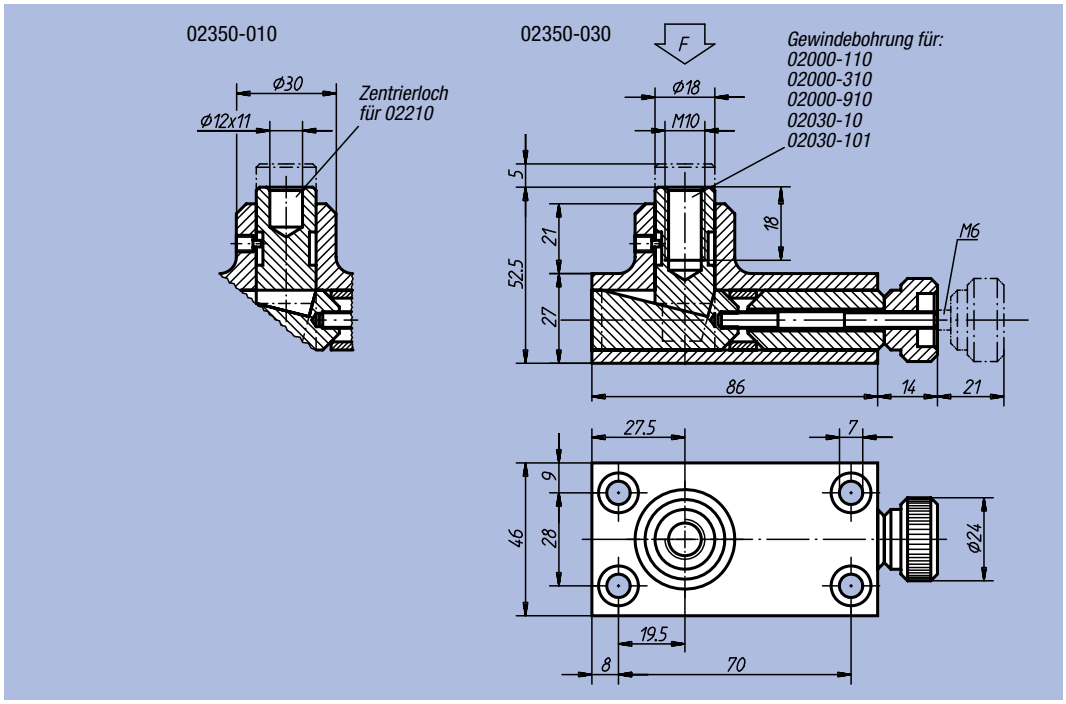

Bestellnummer	F max. kN	kg
02350-010	30	0,950
02350-030	30	0,950

Abstützelemente



Werkstoff:
Stahl.
Ausführung:
einsatzgehärtet, brüniert und geschliffen.
Bestellbeispiel:
nlm 02360-006
Hinweis:
Das Abstützelement dient zum Unterstützen beim Fräsen, Bohren, Hobeln und Schleifen, um das sogenannte Rattern oder Weggehen des Werkstücks zu verhindern.

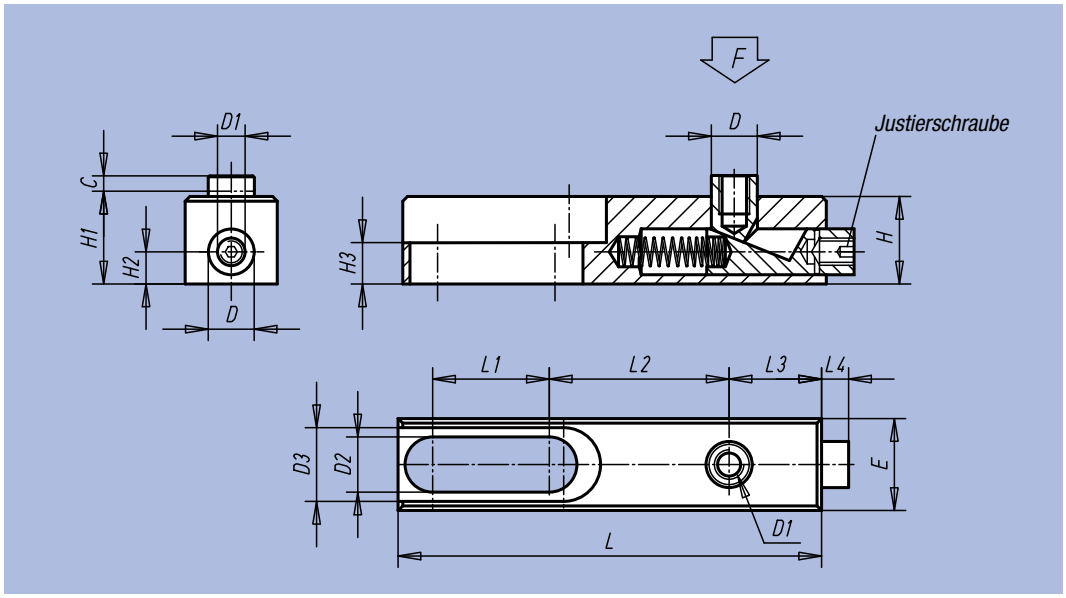

Bestellnummer	C	D	D1	D2	D3	E	H	H1	H2	H3	L	L1	L2	L3	L4	F kN	kg
02360-006	4	10	M6	8,2	16,2	20	19	19,5	7	9	92	25,5	39	20	6	3	0,2
02360-010	6	16	M10	12,5	24,4	30	30	31	10	10	149	44	61	32	11	15	0,6

Ausgleichspanner



Werkstoff:
Stahl.

Ausführung:
einsatzgehärtet, brüniert und geschliffen.

Bestellbeispiel:
nlm 02380-150

Hinweis:
Der Ausgleichspanner dient zum Unterstützen beim Fräsen, Bohren, Hobeln und Schleifen, um das sogenannte Rattern oder Weggehen des Werkstücks zu verhindern. Mit dem Ausgleichspanner kann schnell, exakt und ohne unter das Werkstück zu greifen, abgestützt werden. Der Stützbolzen legt sich mit geringer Federkraft an das Werkstück an. Er kann in jeder beliebigen Stellung verspannt werden.
In das Innengewinde des Stützbolzens lassen sich Gewindestifte beliebiger Art einschrauben, um die Stützhöhe anzupassen.

Die Ausgleichspanner 02380-075, 02380-150 und 02380-170 haben nur 1 Nut.

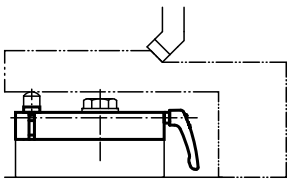

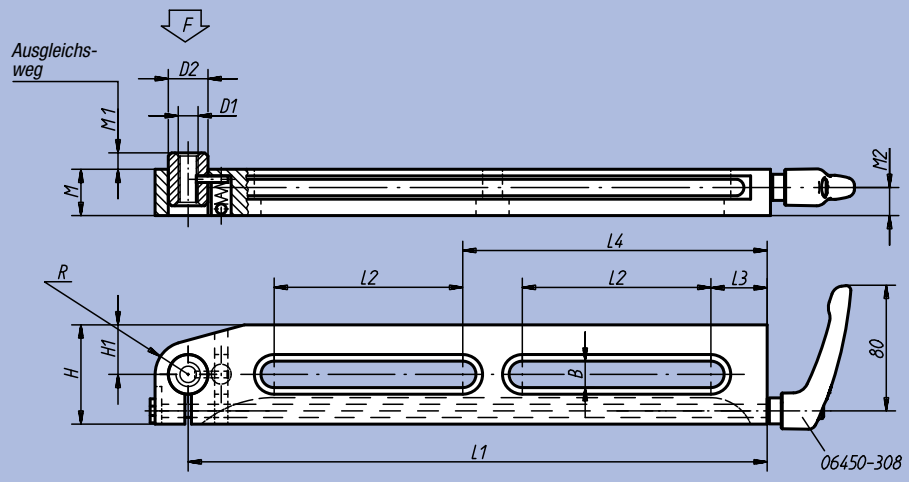

Bestellnummer	L1	L2	L3	L4	B	H	H1	D1	D2	M	M1	M2	R	F (N)	kg
02380-75	75	35	13	-	8,5	30	10	M8	13	19,5	3	11,5	10	500	0,255
02380-150	150	90	20	-	13	50	25	M10	20	24	6	14	15	2500	1,200
02380-170	170	100	25	-	17	60	20	M16	26	34	11	21,5	-	5000	2,400
02380-300	300	100	30	160	13	50	25	M10	20	24	6	14	15	2500	2,130

Stützen verstellbar



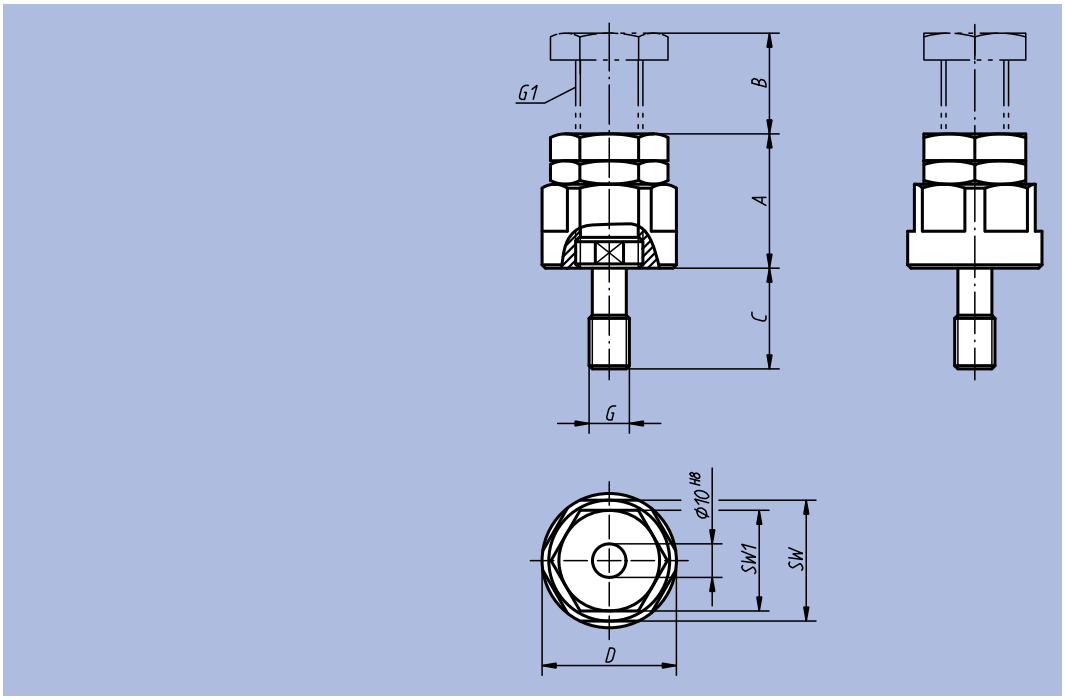

Werkstoff:
Vergütungsstahl.

Ausführung:
brüniert.
Verstellspindel vergütet.

Bestellbeispiel:
nlm 02385-16100

Hinweis:
Die Auflagefläche kann durch Einsätze siehe 02387 den Gegebenheiten angepasst werden.

Bestellnummer	A min.	B max.	C	D	SW	SW1	G	G1	kg
02385-12040	40	10	30	40	36	30	M12	M20x1,5	0,350
02385-12050	50	20	30	40	36	30	M12	M20x1,5	0,420
02385-12070	70	40	30	40	36	30	M12	M20x1,5	0,570
02385-12100	100	50	30	50	46	36	M12	M24x2	1,350
02385-12150	150	100	30	50	46	36	M12	M24x2	2,100
02385-16040	40	10	30	40	36	30	M16	M20x1,5	0,360
02385-16050	50	20	30	40	36	30	M16	M20x1,5	0,430
02385-16070	70	40	30	40	36	30	M16	M20x1,5	0,580
02385-16100	100	50	30	50	46	36	M16	M24x2	1,360
02385-16150	150	100	30	50	46	36	M16	M24x2	2,110

Einsätze



Werkstoff:
Vergütungsstahl.
Ausführung:
vergütet auf 1100 - 1200 N/mm², brüniert.
Bestellbeispiel:
nlm 02387-02

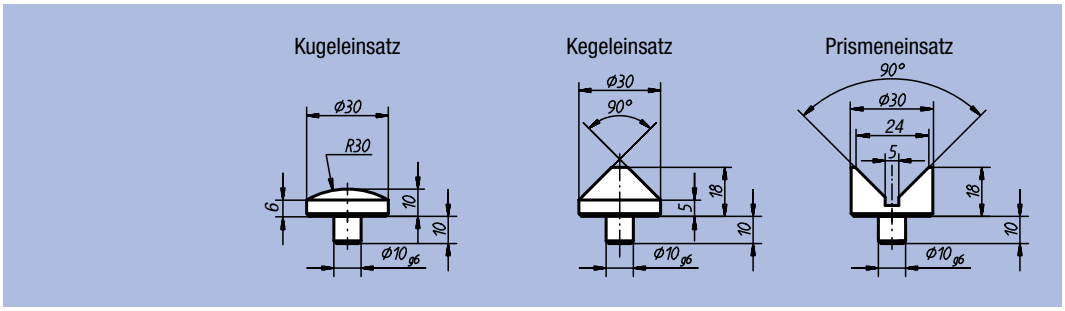

Bestellnummer	Artikel	kg
02387-01	Kugeleinsatz	0,050
02387-02	Kegeleinsatz	0,060
02387-03	Prismeneinsatz	0,070

Für Notizen:

Stützen verstellbar



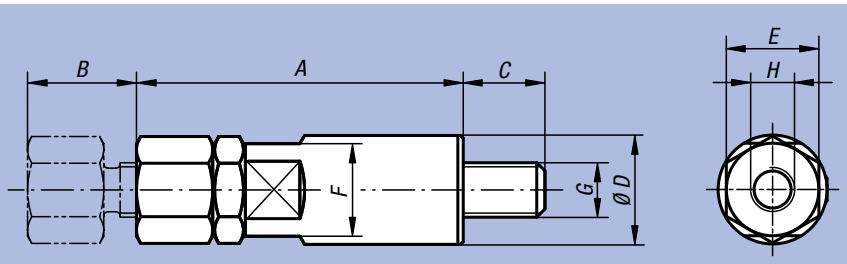

Werkstoff:
Vergütungsstahl.
Ausführung:
brüniert.
Bestellbeispiel:
nlm 02388-08040

Verstellbare Auflage, auf der verschiedene Aufsätze montiert werden können.

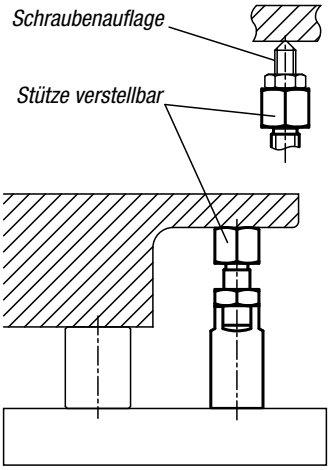

Bestellnummer	A	B	C	D	E	F	G	H	kg
02388-08040	40	10	12	16	13	13	M8	M6x6	0,055
02388-08050	50	20	12	16	13	13	M8	M6x6	0,070
02388-10050	50	10	14	20	17	17	M10	M8x8	0,110
02388-10060	60	20	14	20	17	17	M10	M8x8	0,135
02388-12065	65	15	19	24	22	22	M12	M10x10	0,220
02388-12080	80	30	19	24	22	22	M12	M10x10	0,275
02388-16080	80	15	24	32	27	27	M16	M12x12	0,460
02388-16095	95	30	24	32	27	27	M16	M12x12	0,555

Stützkörper

exzentrisch



Werkstoff:
Automatensonderstahl.
Ausführung:
vergütet und brüniert.
Auflageflächen geschliffen.
Bestellbeispiel:
nlm 02390-10040

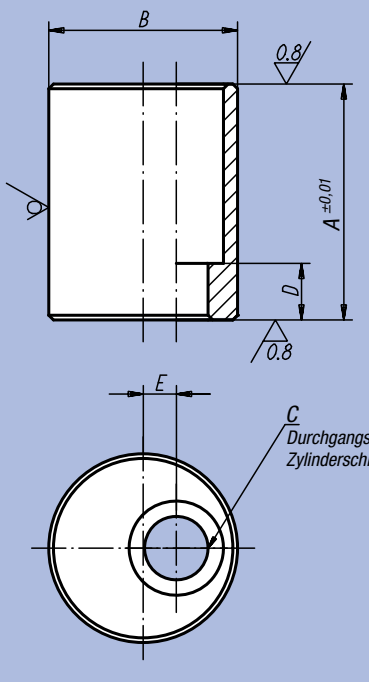

Bestellnummer	A	B	C Durchgangsbohrung für	D	E	kg
02390-08016	16	25	M8	7	3,5	0,050
02390-08020	20	25	M8	7	3,5	0,055
02390-08025	25	25	M8	7	3,5	0,070
02390-08032	32	25	M8	7	3,5	0,085
02390-08040	40	25	M8	7	3,5	0,105
02390-08050	50	25	M8	7	3,5	0,130
02390-10020	20	32	M10	9	5	0,100
02390-10025	25	32	M10	9	5	0,120
02390-10032	32	32	M10	9	5	0,155
02390-10040	40	32	M10	9	5	0,190
02390-10050	50	32	M10	9	5	0,235
02390-10063	63	32	M10	9	5	0,280
02390-12020	20	40	M12	7	7	0,155
02390-12025	25	40	M12	12	7	0,205
02390-12032	32	40	M12	12	7	0,255
02390-12040	40	40	M12	12	7	0,315
02390-12050	50	40	M12	12	7	0,390
02390-12063	63	40	M12	12	7	0,475
02390-12080	80	40	M12	22	7	0,610
02390-12100	100	40	M12	22	7	0,760
02390-12125	125	40	M12	22	7	0,935
02390-16025	25	50	M16	8	10	0,300
02390-16032	32	50	M16	15	10	0,400
02390-16040	40	50	M16	15	10	0,485
02390-16050	50	50	M16	15	10	0,595
02390-16063	63	50	M16	15	10	0,735
02390-16080	80	50	M16	35	10	0,925
02390-16100	100	50	M16	35	10	1,195
02390-16125	125	50	M16	35	10	1,470

03000

Spring Plungers
Locking Bolts
Stops
Centring and positioning components
Fixings
Slot nuts



Spring Plungers

with recess and ball



Material:
Steel version:
sleeve in steel quality class 5.8, ball in steel, spring in spring steel D
Stainless steel version:
sleeve 1.4305, ball 1.4034, spring 1.4310

Surface finish:
Steel version black oxide finish, stainless steel version natural finish, ball in steel or stainless steel, hardened

Sample order:
nlm 03010-203

handle indexing

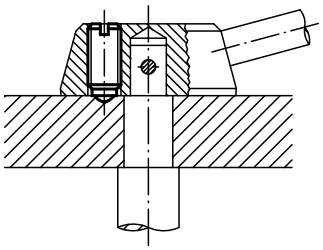

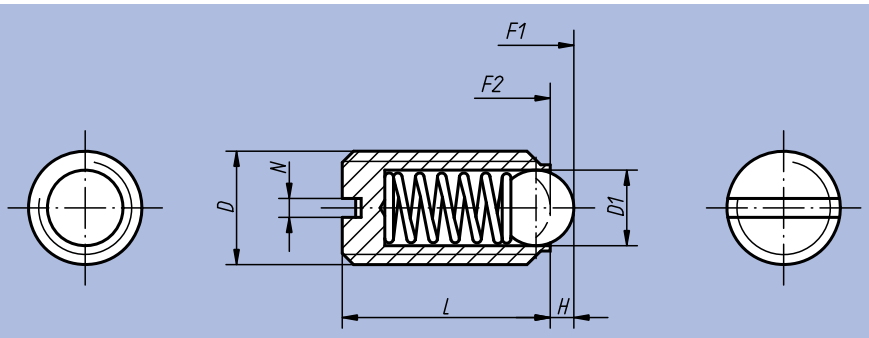

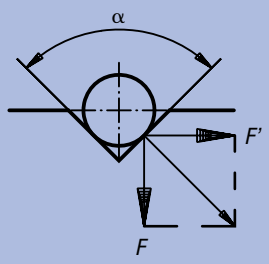

α = 60°, F' = 1.732 x F
α = 90°, F' = F
α = 120°, F' = 0.577 x F

Spring Plungers

with recess and ball

Spring Plungers with recess and ball, standard spring force

Order No. Material steel	Order No. Material stainless steel	D	D1	L	H	N	Spring force initial pressure F1 approx. N	Spring force final pressure F2 approx. N	≈ g
03000-03	03010-03	M3	1,5	7	0,5	0,4	1,5	3	0,2
03000-04	03010-04	M4	2,5	9	0,8	0,6	4	10	0,6
03000-05	03010-05	M5	3	12	0,9	0,8	6	11	0,9
03000-06	03010-06	M6	3,5	14	1	1	9	13	1,5
03000-08	03010-08	M8	5	16	1,5	1,2	15	30	3,5
03000-10	03010-10	M10	6	19	2	1,6	20	35	7
03000-12	03010-12	M12	8	22	2,5	2	30	55	10
03000-16	03010-16	M16	10	24	3,5	2,5	65	125	24
03000-20	03010-20	M20	12	30	4,5	2,5	80	160	44,3

Spring Plungers with recess and ball, strong spring force

Order No. Material steel	Order No. Material stainless steel	D	D1	L	H	N	Spring force initial pressure F1 approx. N	Spring force final pressure F2 approx. N	≈ g
03000-203	03010-203	M3	1,5	7	0,5	0,4	5	7	0,2
03000-204	03010-204	M4	2,5	9	0,8	0,6	12	22	0,6
03000-205	03010-205	M5	3	12	0,9	0,8	19	30	0,9
03000-206	03010-206	M6	3,5	14	1	1	28	40	1,5
03000-208	03010-208	M8	5	16	1,5	1,2	47	73	3,5
03000-210	03010-210	M10	6	19	2	1,6	66	100	7
03000-212	03010-212	M12	8	22	2,5	2	66	120	10
03000-216	03010-216	M16	10	24	3,5	2,5	90	180	24
03000-220	03010-220	M20	12	30	4,5	2,5	115	240	44,3

Spring Plungers with recess and ball, long version, standard spring force

Order No. Material steel	Order No. Material stainless steel	D	D1	L	H	N	Spring force initial pressure F1 approx. N	Spring force final pressure F2 approx. N	≈ g
03000-404	03010-404	M4	2,5	16	0,8	0,6	4	10	0,6
03000-405	03010-405	M5	3	20	0,9	0,8	6	11	0,9
03000-406	03010-406	M6	3,5	25	1	1	9	13	1,5
03000-408	03010-408	M8	5	30	1,5	1,2	15	30	3,5
03000-410	03010-410	M10	6	35	2	1,6	20	35	7
03000-412	03010-412	M12	8	40	2,5	2	30	55	10
03000-416	03010-416	M16	10	45	3,5	2,5	65	125	24

Spring Plungers

with recess and ball



Material, surface finish:
Sleeve in plastic; ball in white delrin or stainless steel 1.4034, hardened; spring 1.4310

Sample order:
nlm 03004-10

Note:
Spring plungers are used for indexing and positioning. They can also be used as ejectors.

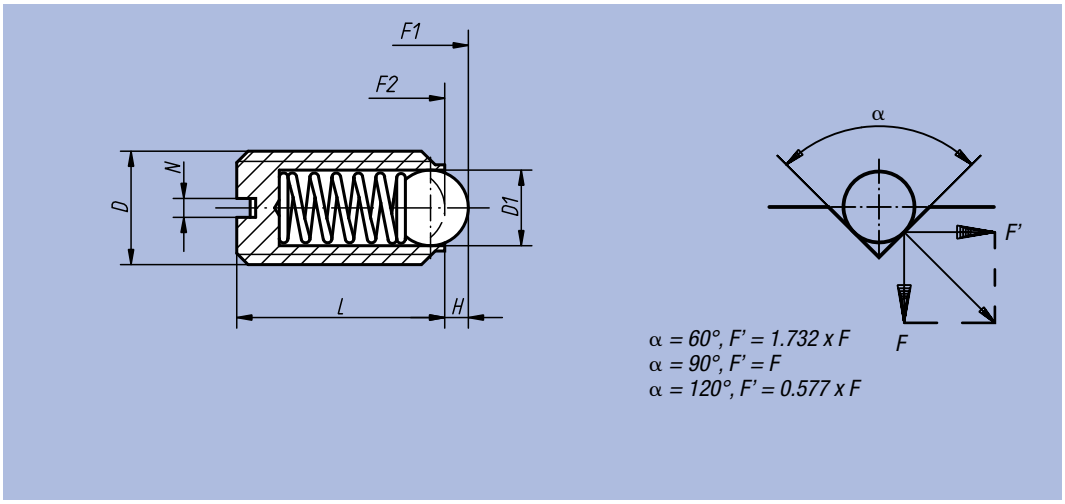

Order No.	Surface finish	D	D1	L	H	N	Spring force initial pressure F1 approx. N	Spring force final pressure F2 approx. N	□ g
03004-06	ball delrin	M6	3,5	14	1	1	9	13	0,4
03004-08	ball delrin	M8	5	16	1,5	1,2	15	30	0,8
03004-10	ball delrin	M10	6	19	2	1,6	20	40	1,6
03014-06	ball stainless steel	M6	3,5	14	1	1	9	13	0,6
03014-08	ball stainless steel	M8	5	16	1,5	1,2	15	30	1,2
03014-10	ball stainless steel	M10	6	19	2	1,6	20	40	2,3

Spring Plungers

with recess and pressure pin



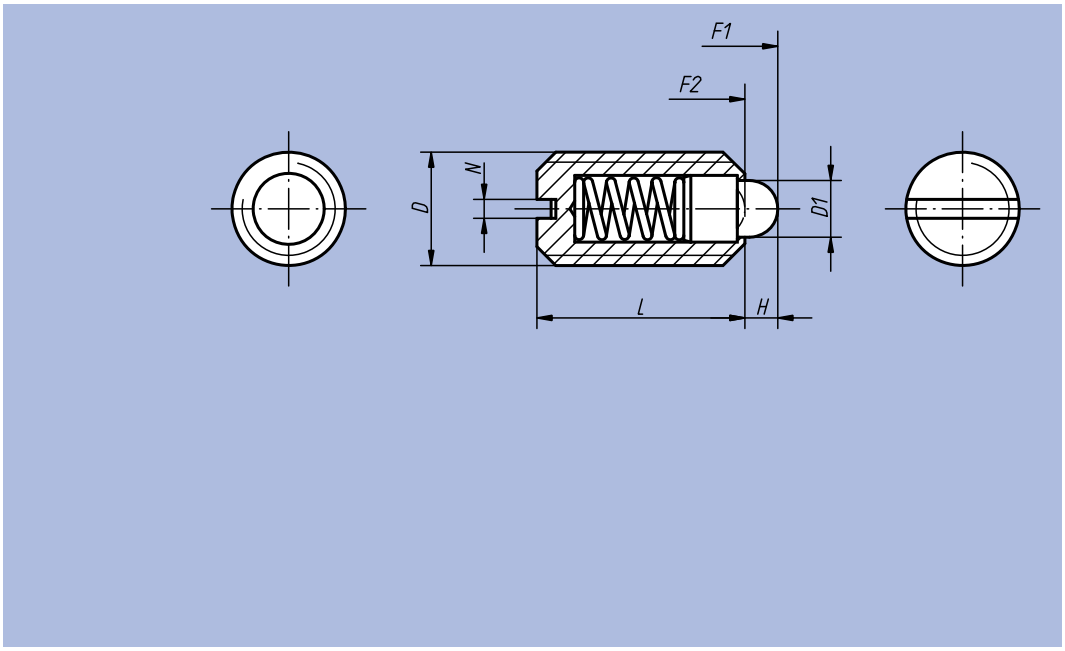

Material:
Steel version:
sleeve in steel quality class 5.8, pressure pin in steel, spring in spring steel D
Stainless steel version:
sleeve 1.4305, pressure pin 1.4034, spring 1.4310

Surface finish:
Steel version black oxide finish, stainless steel version natural finish, pressure pin in steel or stainless steel, hardened

Sample order:
nlm 03020-10

Spring Plungers with recess and pressure pin, standard spring force

Order No. Material steel	Order No. Material stainless steel	D	D1	L	H	N	Spring force initial pressure F1 approx. N	Spring force final pressure F2 approx. N	≙ g
03020-04	03025-04	M4	1,8	9	1,5	0,6	6	20	0,39
03020-05	03025-05	M5	2,4	12	2	0,8	6	20	1
03020-06	03025-06	M6	2,7	14	2	1	7	20	1,7
03020-08	03025-08	M8	4	16	2	1,2	15	30	4
03020-10	03025-10	M10	4,5	19	2,5	1,6	20	35	7
03020-12	03025-12	M12	6	22	3,5	2	30	55	13
03020-16	03025-16	M16	8,5	24	4,5	2,5	45	100	24
03020-20	03025-20	M20	10	30	6,5	2,5	60	120	46,3

Spring Plungers with recess and pressure pin, light spring force

Order No. Material steel	Order No. Material stainless steel	D	D1	L	H	N	Spring force initial pressure F1 approx. N	Spring force final pressure F2 approx. N	≙ g
03020-104	03025-104	M4	1,8	9	1,5	0,6	3	10	0,39
03020-105	03025-105	M5	2,4	12	2	0,8	3	10	1
03020-106	03025-106	M6	2,7	14	2	1	4	10	1,7
03020-108	03025-108	M8	4	16	2	1,2	7	15	4
03020-110	03025-110	M10	4,5	19	2,5	1,6	9	16	7
03020-112	03025-112	M12	6	22	3,5	2	14	26	13
03020-116	03025-116	M16	8,5	24	4,5	2,5	22	50	24
03020-120	03025-120	M20	10	30	6,5	2,5	30	60	46,3

Spring Plungers with recess and pressure pin, strong spring force

Order No. Material steel	Order No. Material stainless steel	D	D1	L	H	N	Spring force initial pressure F1 approx. N	Spring force final pressure F2 approx. N	≙ g
03020-205	03025-205	M5	2,4	12	2	0,8	9	25	1
03020-206	03025-206	M6	2,7	14	2	1	11	25	1,7
03020-208	03025-208	M8	4	16	2	1,2	22	43	4
03020-210	03025-210	M10	4,5	19	2,5	1,6	20	54	7
03020-212	03025-212	M12	6	22	3,5	2	36	94	13
03020-216	03025-216	M16	8,5	24	4,5	2,5	60	110	24

Spring Plungers

with end position feedback



Material:
Sleeve, pressure pin and spring in steel, inductive proximitiy switch

Surface finish:
Black oxide finish, pressure pin hrdened

Sample order:
nlm 03020-5081

Note:
An electrical control signal can be sent via the built-in end switch.
Voltage: U = 10 – 30 V DC
Electricity: I max. = 200 mA
Temperature range: -25 °C – +70 °C
Protection class: IP 67

Safety:
The use of spring plungers with end position feedback is not suitable for restraining people.

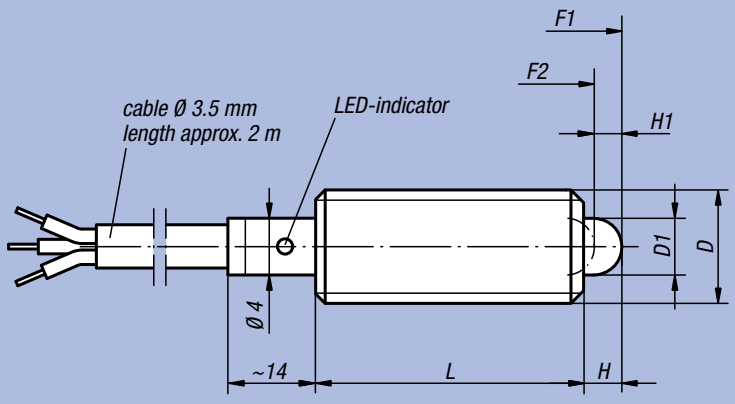

Connection diagram:

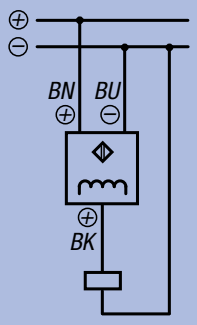

BN = brown
BK = black
BU = blue

PNP

Normally closed

Normally open

Application, position feedback:
Pos. 1: slide engaged
Pos. 2: slide disengaged

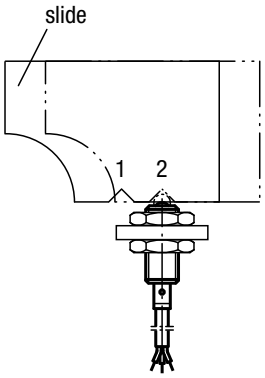

Order No.	Surface finish	D	D1	L	H	H1	Switching contact from stroke H1	Spring force initial pressure F1 approx. N	Spring force final pressure F2 approx. N
03020-5061	normally closed	M6	2,7	27	3	2	1,2 - 1,6	7	20
03020-5081	normally closed	M8	4	29	3	2	1,2 - 1,6	15	30
03020-5101	normally closed	M10	4,5	36	4	3	2,2 - 2,6	26	44
03020-5062	normally open	M6	2,7	27	3	2	1,2 - 1,6	7	20
03020-5082	normally open	M8	4	29	3	2	1,2 - 1,6	15	30
03020-5102	normally open	M10	4,5	36	4	3	2,2 - 2,6	26	44

Notes:

Spring Plungers

with hexagon socket and ball



Material:
Steel version:
sleeve in steel quality class 5.8, ball in steel, spring in spring steel D
Stainless steel version:
sleeve 1.4305, ball 1.4034, spring 1.4310

Surface finish:
Steel version black oxide finish, stainless steel version natural finish, ball in steel or stainless steel, hardened

Sample order:
nlm 03030-210

column locking

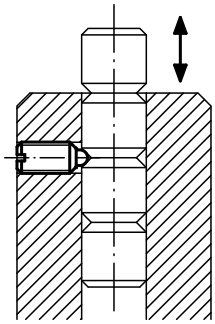

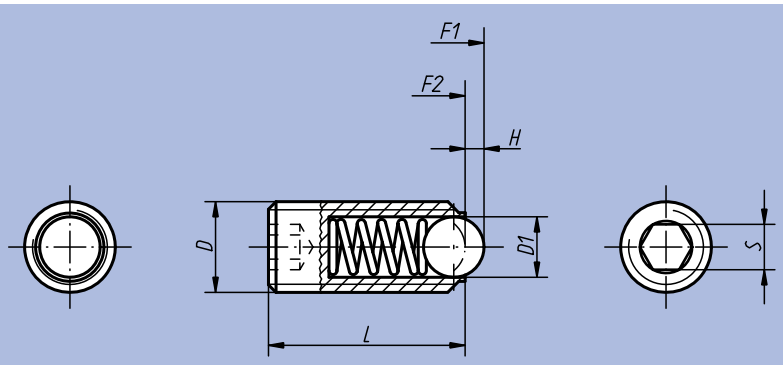

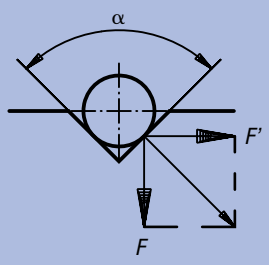

α = 60°, F' = 1.732 x F
α = 90°, F' = F
α = 120°, F' = 0.577 x F

Spring Plungers

with hexagon socket and ball

Spring Plungers with hexagon socket and ball, standard spring force

Order No. Material steel	Order No. Material stainless steel	D	D1	L	H	S	Spring force initial pressure F1 approx. N	Spring force final pressure F2 approx. N	≙ g
03030-03	03035-03	M3	1,5	9	0,5	1,5	1,5	3	0,23
03030-04	03035-04	M4	2,5	10	0,8	2	4	10	0,46
03030-05	03035-05	M5	3	14	0,9	2,5	6	11	1,27
03030-06	03035-06	M6	3,5	15	1	3	9	13	2
03030-08	03035-08	M8	5	18	1,5	4	15	30	4
03030-10	03035-10	M10	6	23	2	5	20	35	8
03030-12	03035-12	M12	8	26	2,5	6	30	55	12
03030-16	03035-16	M16	10	33	3,5	8	65	125	31
03030-20	03035-20	M20	12	43	4,5	10	80	160	64
03030-24	03035-24	M24	15	48	5,5	12	90	180	100

Spring Plungers with hexagon socket and ball, long version, strong spring force

Order No. Material steel	Order No. Material stainless steel	D	D1	L	H	S	Spring force initial pressure F1 approx. N	Spring force final pressure F2 approx. N	≙ g
03030-203	03035-203	M3	1,5	9	0,5	1,5	5	7	0,23
03030-204	03035-204	M4	2,5	10	0,8	2	12	22	0,46
03030-205	03035-205	M5	3	14	0,9	2,5	19	30	1,27
03030-206	03035-206	M6	3,5	15	1	3	28	40	2
03030-208	03035-208	M8	5	18	1,5	4	47	73	4
03030-210	03035-210	M10	6	23	2	5	66	100	8
03030-212	03035-212	M12	8	26	2,5	6	66	120	12
03030-216	03035-216	M16	10	33	3,5	8	90	180	31
03030-220	03035-220	M20	12	43	4,5	10	115	240	64
03030-224	03035-224	M24	15	48	5,5	12	130	270	100

Spring Plungers with hexagon socket and ball, long version, standard spring force

Order No. Material steel	Order No. Material stainless steel	D	D1	L	H	S	Spring force initial pressure F1 approx. N	Spring force final pressure F2 approx. N	≙ g
03030-404	03035-404	M4	2,5	16	0,8	2	4	10	0,89
03030-405	03035-405	M5	3	20	0,9	2,5	6	11	1,82
03030-406	03035-406	M6	3,5	25	1	3	9	13	3,37
03030-408	03035-408	M8	5	30	1,5	4	15	30	7,36
03030-410	03035-410	M10	6	35	2	5	20	35	13,52
03030-412	03035-412	M12	8	40	2,5	6	30	55	21,61
03030-416	03035-416	M16	10	45	3,5	8	65	125	46,56

Spring Plungers

with hexagon socket and pressure pin, long version



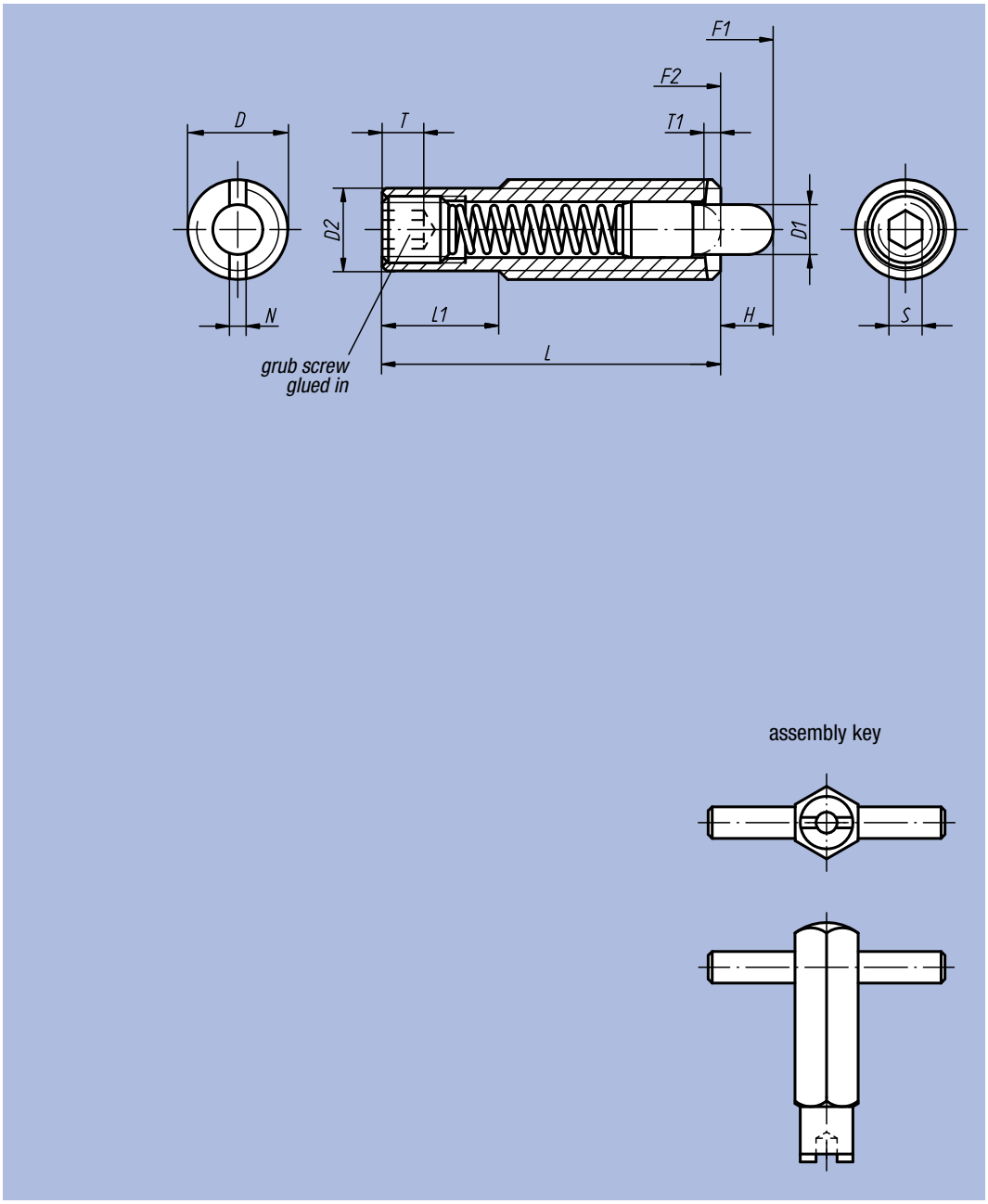

Material:
Sleeve in steel quality class 5.8,
pressure pin in steel,
spring in spring steel D

Surface finish:
Black oxide finish; pressure pin hardened

Sample order:
nlm 03040-616

Note:
These spring plungers are chiefly used as ejectors and spring stops in machine construction.

bending the shank

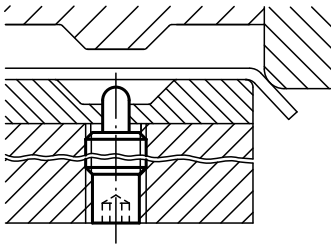

press

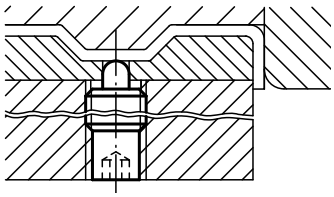

assembly key

Order No.	D	D1	D2	L	L1	H	T	T1	N	S	Spring force initial pressure F1 approx. N	Spring force final pressure F2 approx. N	Order No. assembly key
03040-608	M8	3,5	6,2	30	10	6	2	1,4	1,2	2,5	8	22	03040-908
03040-610	M10	4	8	40	10	8	3	1,4	1,6	3	12	30	03040-910
03040-612	M12	6	9,6	50	20	10	5	2	2	4	20	50	03040-912
03040-616	M16	7,5	13,4	60	30	12	6	2,5	2,5	5	30	64	03040-916

Notes:

Spring Plungers

with hexagon socket and pressure pin, steel



Material:
Sleeve in steel quality class 5.8, pressure pin in steel or plastic, spring in spring steel D

Surface finish:
Black oxide finish; pressure pin in steel, hardened

Sample order:
nlm 03050-16

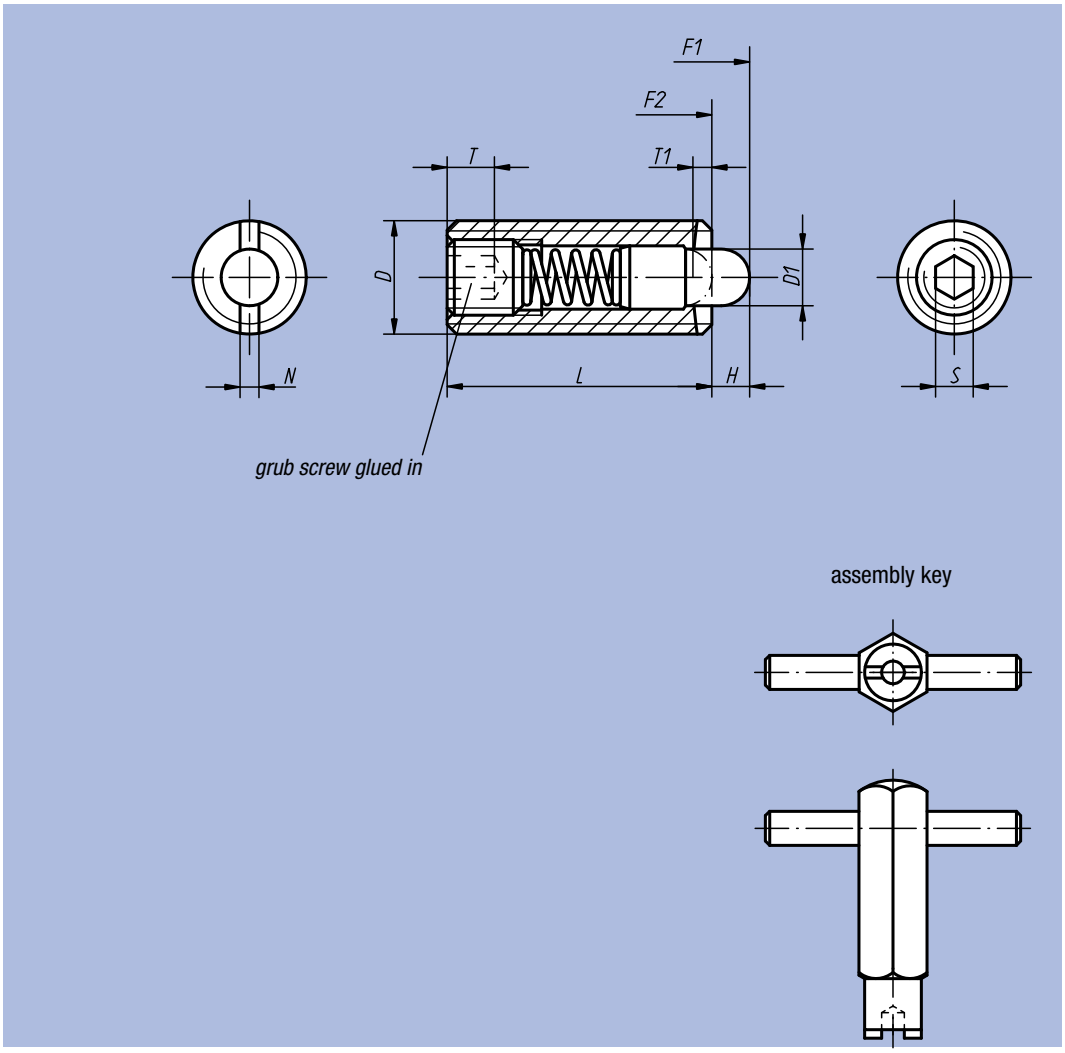

Spring Plunger
cutaway view

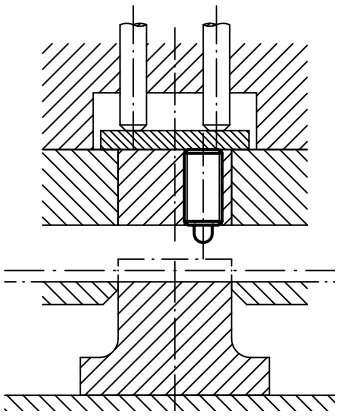

Spring Plungers

with hexagon socket and pressure pin, steel

Spring Plungers with hexagon socket and pressure pin, standard spring force

Order No. Surface finish pressure pin in steel	Order No. Surface finish pressure pin in plastic	D	D1	L	H	T	T1	N	S	Spring force initial pressure F1 approx. N	Spring force final pressure F2 approx. N	g	Order No. assembly key
03040-03	03050-03	M3	1	10	1,5	1,5	1	0,4	0,7	0,5	3	0,35	03040-903
03040-04	03050-04	M4	1,5	15	1,5	2	0,6	0,6	1,3	5	16	0,8	03040-904
03040-05	03050-05	M5	2,4	18	2,3	2	0,8	0,8	1,5	6	20	1,3	03040-905
03040-06	03050-06	M6	2,7	20	2,5	2,5	1	1	2	7	20	2,5	03040-906
03040-08	03050-08	M8	3,5	22	3	3	1,4	1,2	2,5	9	35	6	03040-908
03040-10	03050-10	M10	4	22	3	3,5	1,4	1,6	3	9	35	9	03040-910
03040-12	03050-12	M12	6	28	4	5	2	2	4	10	55	16	03040-912
03040-16	03050-16	M16	7,5	32	5	6	2,5	2,5	5	45	100	35	03040-916
03040-20	-	M20	10	40	7	8	3	2,5	6	60	120	66,3	-
03040-24	-	M24	12	52	10	10	3	2,5	8	80	160	122,2	-

Spring Plungers with hexagon socket and pressure pin, light spring force

Order No. Surface finish pressure pin in steel	Order No. Surface finish pressure pin in plastic	D	D1	L	H	T	T1	N	S	Spring force initial pressure F1 approx. N	Spring force final pressure F2 approx. N	g	Order No. assembly key
03040-104	03050-104	M4	1,5	15	1,5	2	0,6	0,6	1,3	2	7	0,8	03040-904
03040-105	03050-105	M5	2,4	18	2,3	2	0,8	0,8	1,5	3	10	1,3	03040-905
03040-106	03050-106	M6	2,7	20	2,5	2,5	1	1	2	3	9	2,5	03040-906
03040-108	03050-108	M8	3,5	22	3	3	1,4	1,2	2,5	4	16	6	03040-908
03040-110	03050-110	M10	4	22	3	3,5	1,4	1,6	3	4	16	9	03040-910
03040-112	03050-112	M12	6	28	4	5	2	2	4	5	27	16	03040-912
03040-116	03050-116	M16	7,5	32	5	6	2,5	2,5	5	20	45	35	03040-916

Spring Plungers with hexagon socket and pressure pin, strong spring force

Order No.	Surface finish	D	D1	L	H	T	T1	N	S	Spring force initial pressure F1 approx. N	Spring force final pressure F2 approx. N	g	Order No. assembly key
03040-205	pressure pin in steel	M5	2,4	18	2,3	2	0,8	0,8	1,5	11	29	1,3	03040-905
03040-206	pressure pin in steel	M6	2,7	20	2,5	2,5	1	1	2	14	37	2,5	03040-906
03040-208	pressure pin in steel	M8	3,5	22	3	3	1,4	1,2	2,5	22	65	6	03040-908
03040-210	pressure pin in steel	M10	4	22	3	3,5	1,4	1,6	3	19	70	9	03040-910
03040-212	pressure pin in steel	M12	6	28	4	5	2	2	4	25	85	16	03040-912
03040-216	pressure pin in steel	M16	7,5	32	5	6	2,5	2,5	5	60	150	35	03040-916
03040-220	pressure pin in steel	M20	10	40	7	8	3	2,5	6	75	190	66,3	-
03040-224	pressure pin in steel	M24	12	52	10	10	3	2,5	8	95	240	122,2	-

Spring Plungers

with hexagon socket and pressure pin, stainless steel



Material:
Sleeve 1.4305,
pressure pin 1.4034 or plastic,
spring 1.4310

Surface finish:
Natural finish; pressure pin in stainless steel, hardened

Sample order:
nlm 03055-16

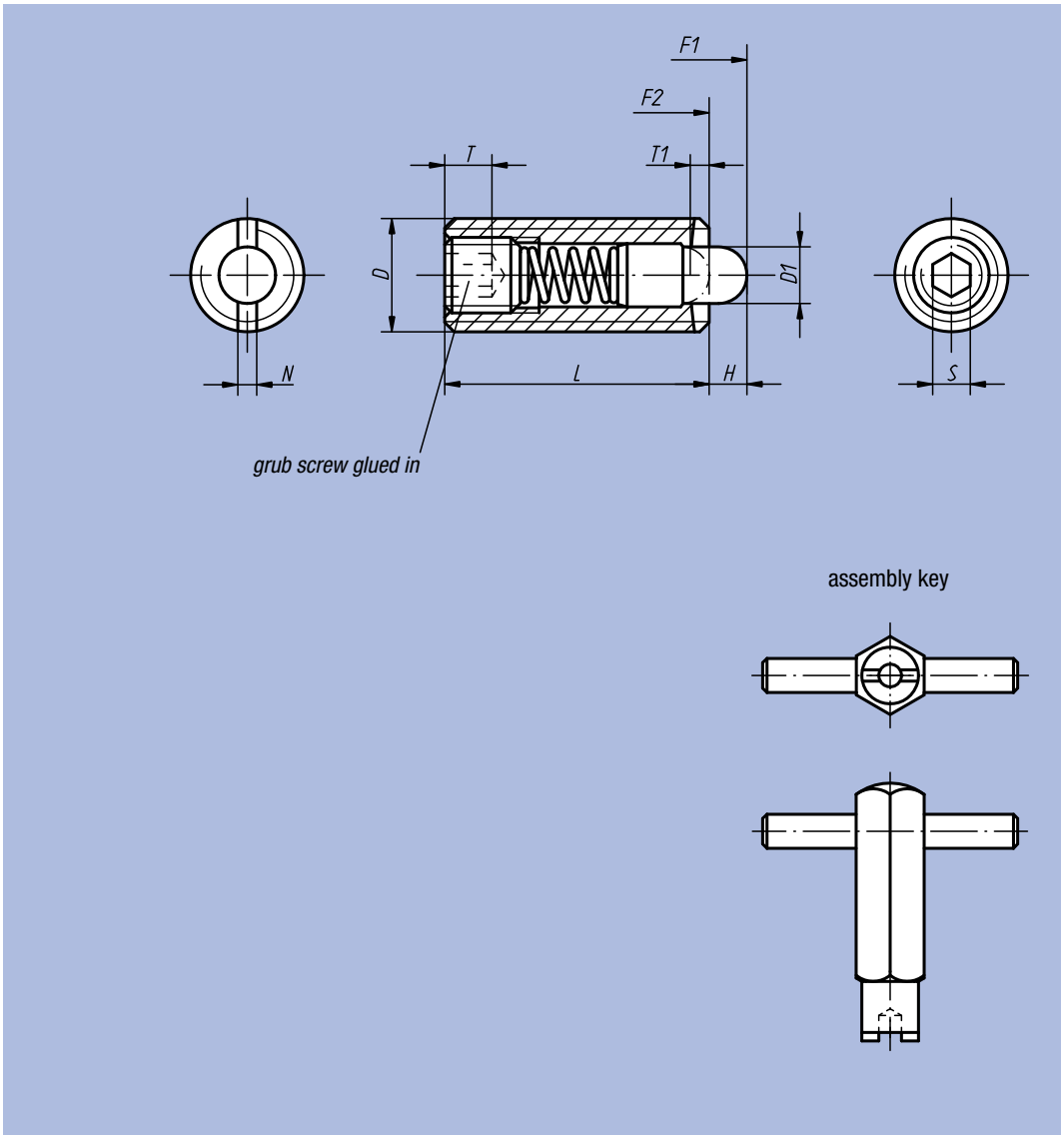

Spring Plunger
cutaway view

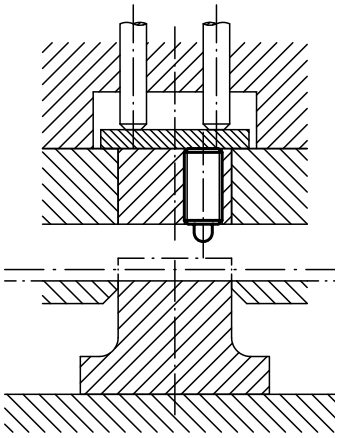

Spring Plungers

with hexagon socket and pressure pin, stainless steel

Spring Plungers with hexagon socket and pressure pin, standard spring force

Order No. Surface finish pressure pin in stainless steel	Order No. Surface finish pressure pin in plastic	D	D1	L	H	T	T1	N	S	Spring force initial pressure F1 approx. N	Spring force final pressure F2 approx. N	g	Order No. assembly key
03055-03	**03058-03**	M3	1	10	1,5	1,5	1	0,4	0,7	0,5	3	0,35	03040-903
03055-04	**03058-04**	M4	1,5	15	1,5	2	0,6	0,6	1,3	5	16	0,8	03040-904
03055-05	**03058-05**	M5	2,4	18	2,3	2	0,8	0,8	1,5	5	17	1,3	03040-905
03055-06	**03058-06**	M6	2,7	20	2,5	2,5	1	1	2	6	17	2,5	03040-906
03055-08	**03058-08**	M8	3,5	22	3	3	1,4	1,2	2,5	7	29	6	03040-908
03055-10	**03058-10**	M10	4	22	3	3,5	1,4	1,6	3	8	31	9	03040-910
03055-12	**03058-12**	M12	6	28	4	5	2	2	4	10	47	16	03040-912
03055-16	**03058-16**	M16	7,5	32	5	6	2,5	2,5	5	45	100	35	03040-916

Spring Plungers with hexagon socket and pressure pin, strong spring force

Order No.	Surface finish	D	D1	L	H	T	T1	N	S	Spring force initial pressure F1 approx. N	Spring force final pressure F2 approx. N	g	Order No. assembly key
03055-205	pressure pin in stainless steel	M5	2,4	18	2,3	2	0,8	0,8	1,5	9	26	1,3	03040-905
03055-206	pressure pin in stainless steel	M6	2,7	20	2,5	2,5	1	1	2	11	35	2,5	03040-906
03055-208	pressure pin in stainless steel	M8	3,5	22	3	3	1,4	1,2	2,5	15	48	6	03040-908
03055-210	pressure pin in stainless steel	M10	4	22	3	3,5	1,4	1,6	3	15	58	9	03040-910
03055-212	pressure pin in stainless steel	M12	6	28	4	5	2	2	4	19	74	16	03040-912

Spring Plungers with LONG-LOK thread lock

Long-Lok, the most advanced locking thread mechanism

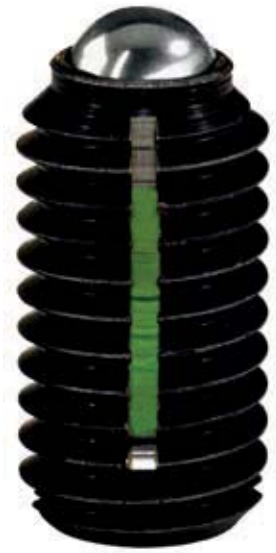

The following advantages are yours:

1. Vibration Resistant

The integrated LONG-LOK thread lock secures Spring Plungers rationally and economically. No loosening or falling out after impacts, knocks or vibrations.

2. Extremly High Loosening Torque

The resilient nylon insert is squeezed like a wedge between the thread of the Spring Plunger and the fastening component. By means of the nylon locking system, the thread backlash is shifted to one side, which in turn causes surface pressure at the thread flanks. The resulting loosening torque is higher than that achieved with most conventional, mechanical methods.

3. Secure in Every Position

The LONG-LOK thread lock neither requires initial tension nor any defined position. This is ideal for the positioning of the Spring Plungers.

4. Save Assembly Time and Stocking Space

The LONG-LOK thread lock is integrated into Spring Plungers. There are no additional components. No circlips, no spring washers, no locking nuts. As a result, assembly and stocking costs are reduced considerably.

5. For Repeated Use

When using the LONG-LOK thread lock for the first time, it requires a slightly higher tightening torque. After third or fourth use, the value reached last remains nearly constant for about 20 times.

6. Problem Solver from M3 to M16

Light-weight or heavy-weight: name your requirements! We will supply you with the suitable Spring Plungers with integrated LONG-LOK thread lock.



Spring Plungers

with recess and ball LONG-LOK secured



Material:
Steel version:
sleeve in steel quality class 5.8, ball in steel, spring in spring steel D
Stainless steel version:
sleeve 1.4305, ball 1.4034, spring 1.4310

LONG-LOK thread lock in nylon

Surface finish:
Steel version black oxide finish, stainless steel version natural finish, ball in steel or stainless steel, hardened

Sample order:
nlm 03001-12

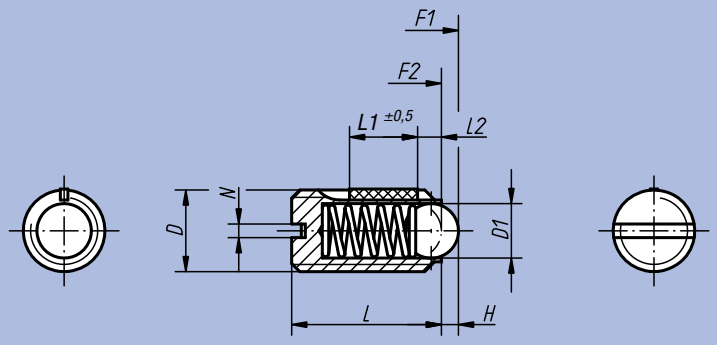

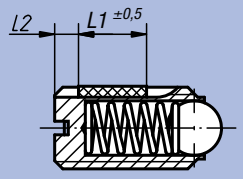

applies to models with
D = M3, M4, M5 and M6

L2 = approx. two thread turns

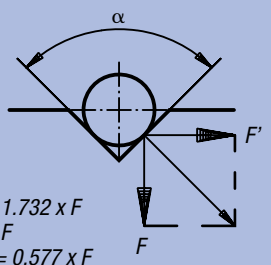

α = 60°, F' = 1.732 x F
α = 90°, F' = F
α = 120°, F' = 0.577 x F

Spring Plungers with recess and ball, standard spring force, LONG-LOK secured

Order No. Material steel	Order No. Material stainless steel	D	D1	L	L1	H	N	Spring force initial pressure F1 approx. N	Spring force final pressure F2 approx. N	Tightening torque approx. Nm	Loosening torque, after third unscrewing approx. Nm	≙ g
03001-03	03011-03	M3	1,5	7	4	0,5	0,4	1,5	3	0,10	0,07	0,2
03001-04	03011-04	M4	2,5	9	5	0,8	0,6	4	10	0,18	0,12	0,6
03001-05	03011-05	M5	3	12	6	0,9	0,8	6	11	0,12	0,08	0,9
03001-06	03011-06	M6	3,5	14	7	1	1	9	13	0,43	0,21	1,5
03001-08	03011-08	M8	5	16	8	1,5	1,2	15	30	1,09	0,37	3,5
03001-10	03011-10	M10	6	19	9	2	1,6	20	35	1,36	0,62	7
03001-12	03011-12	M12	8	22	10	2,5	2	30	55	2,03	1,36	10
03001-16	03011-16	M16	10	24	14	3,5	2,5	65	125	3,95	2,95	24

Spring Plungers with recess and ball, strong spring force, LONG-LOK secured

Order No. Material steel	Order No. Material stainless steel	D	D1	L	L1	H	N	Spring force initial pressure F1 approx. N	Spring force final pressure F2 approx. N	Tightening torque approx. Nm	Loosening torque, after third unscrewing approx. Nm	≙ g
03001-203	03011-203	M3	1,5	7	4	0,5	0,4	5	7	0,10	0,07	0,2
03001-204	03011-204	M4	2,5	9	5	0,8	0,6	12	22	0,18	0,12	0,6
03001-205	03011-205	M5	3	12	6	0,9	0,8	19	30	0,12	0,08	0,9
03001-206	03011-206	M6	3,5	14	7	1	1	28	40	0,43	0,21	1,5
03001-208	03011-208	M8	5	16	8	1,5	1,2	47	73	1,09	0,37	3,5
03001-210	03011-210	M10	6	19	9	2	1,6	66	100	1,36	0,62	7
03001-212	03011-212	M12	8	22	10	2,5	2	66	120	2,03	1,36	10
03001-216	03011-216	M16	10	24	14	3,5	2,5	90	180	3,95	2,95	24

Spring Plungers

with recess and pressure pin LONG-LOK secured



Material:
Steel version:
sleeve in steel quality class 5.8, pressure pin in steel, spring in spring steel D
Stainless steel version:
sleeve 1.4305, pressure pin 1.4034, spring 1.4310

LONG-LOK thread lock in nylon

Surface finish:
Steel version black oxide finish, stainless steel version natural finish, pressure pin in steel or stainless steel, hardened

Sample order:
nlm 03021-10

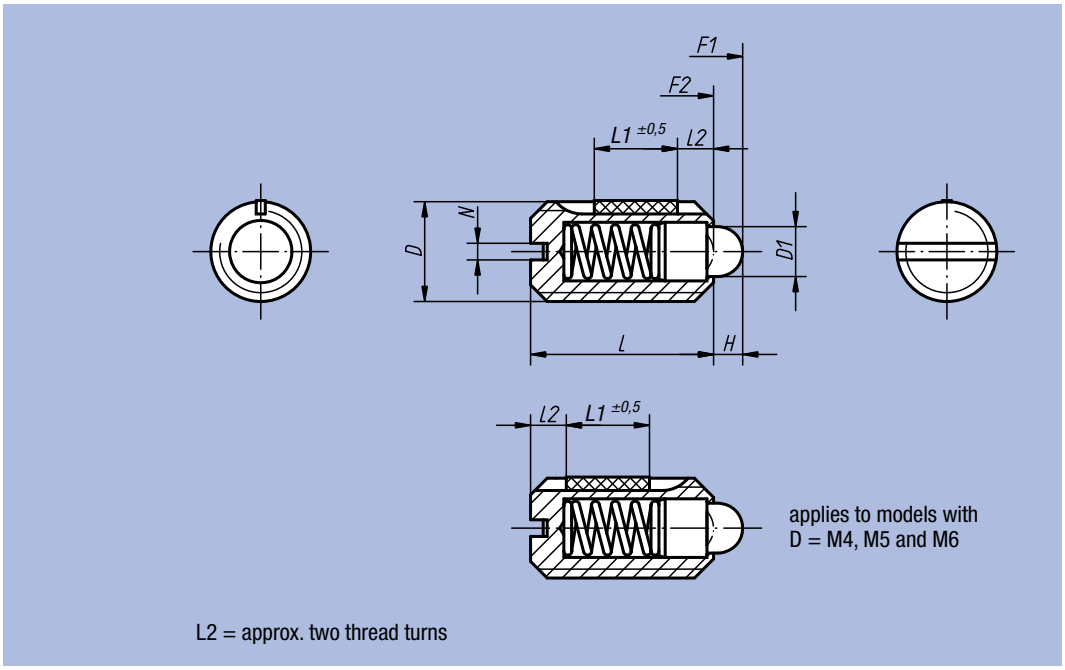

Spring Plungers with recess and pressure pin, standard spring force, LONG-LOK secured

Order No. Material steel	Order No. Material stainless steel	D	D1	L	L1	H	N	Spring force initial pressure F1 approx. N	Spring force final pressure F2 approx. N	Tightening torque approx. Nm	Loosening torque, after third unscrewing approx. Nm	g
03021-04	03026-04	M4	1,8	9	5	1,5	0,6	6	20	0,18	0,12	0,39
03021-05	03026-05	M5	2,4	12	6	2	0,8	6	20	0,12	0,08	1
03021-06	03026-06	M6	2,7	14	7	2	1	7	20	0,44	0,21	1,7
03021-08	03026-08	M8	4	16	8	2	1,2	15	30	1,10	0,38	4
03021-10	03026-10	M10	4,5	19	9	2,5	1,6	20	35	1,36	0,62	7
03021-12	03026-12	M12	6	22	10	3,5	2	30	55	2,11	1,41	13
03021-16	03026-16	M16	8,5	24	14	4,5	2,5	45	100	3,95	3,05	24

Spring Plungers with recess and pressure pin, light spring force, LONG-LOK secured

Order No. Material steel	Order No. Material stainless steel	D	D1	L	L1	H	N	Spring force initial pressure F1 approx. N	Spring force final pressure F2 approx. N	Tightening torque approx. Nm	Loosening torque, after third unscrewing approx. Nm	g
03021-104	03026-104	M4	1,8	9	5	1,5	0,6	3	10	0,18	0,12	0,39
03021-105	03026-105	M5	2,4	12	6	2	0,8	3	10	0,12	0,08	1
03021-106	03026-106	M6	2,7	14	7	2	1	4	10	0,44	0,21	1,7
03021-108	03026-108	M8	4	16	8	2	1,2	7	15	1,10	0,38	4
03021-110	03026-110	M10	4,5	19	9	2,5	1,6	9	16	1,36	0,62	7
03021-112	03026-112	M12	6	22	10	3,5	2	14	26	2,11	1,41	13
03021-116	03026-116	M16	8,5	24	14	4,5	2,5	22	50	3,95	3,05	24

Spring Plungers with recess and pressure pin, strong spring force, LONG-LOK secured

Order No. Material steel	Order No. Material stainless steel	D	D1	L	L1	H	N	Spring force initial pressure F1 approx. N	Spring force final pressure F2 approx. N	Tightening torque approx. Nm	Loosening torque, after third unscrewing approx. Nm	g
03021-205	03026-205	M5	2,4	12	6	2	0,8	9	25	0,12	0,08	1
03021-206	03026-206	M6	2,7	14	7	2	1	11	25	0,44	0,21	1,7
03021-208	03026-208	M8	4	16	8	2	1,2	22	43	1,1	0,38	4
03021-210	03026-210	M10	4,5	19	9	2,5	1,6	20	54	1,36	0,62	7
03021-212	03026-212	M12	6	22	10	3,5	2	36	94	2,11	1,41	13
03021-216	03026-216	M16	8,5	24	14	4,5	2,5	60	110	3,99	3,05	29

Spring Plungers

with hexagon socket and ball LONG-LOK secured



Material:
Steel version:
sleeve in steel quality class 5.8, ball in steel, spring in spring steel D
Stainless steel version:
sleeve 1.4305, ball 1.4034, spring 1.4310

LONG-LOK thread lock in nylon

Surface finish:
Steel version black oxide finish, stainless steel version natural finish, ball in steel or stainless steel, hardened

Sample order:
nlm 03031-08

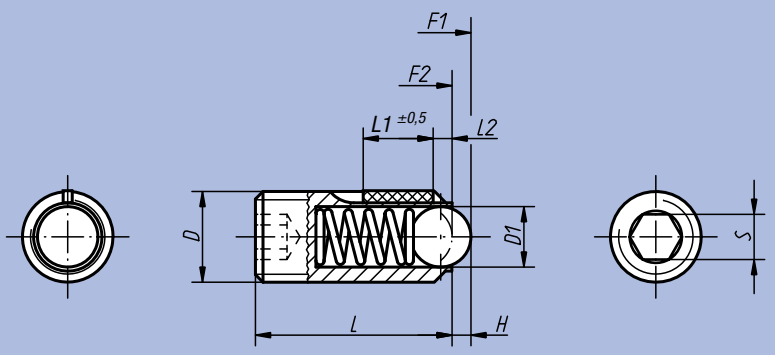

L2 = approx. two thread turns

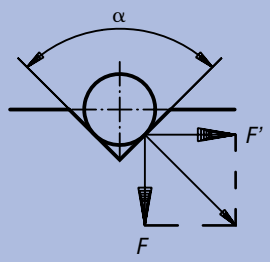

α = 60°, F' = 1.732 x F
α = 90°, F' = F
α = 120°, F' = 0.577 x F

Spring Plungers with hexagon socket and ball, standard spring force, LONG-LOK secured

Order No. Material steel	Order No. Material stainless steel	D	D1	L	L1	H	S	Spring force initial pressure F1 approx. N	Spring force final pressure F2 approx. N	Tightening torque approx. Nm	Loosening torque, after third unscrewing approx. Nm	≙ g
03031-03	03036-03	M3	1,5	9	4	0,5	1,5	1,5	3	0,10	0,07	0,23
03031-04	03036-04	M4	2,5	10	5	0,8	2	4	10	0,18	0,12	0,46
03031-05	03036-05	M5	3	14	6	0,9	2,5	6	11	0,12	0,08	1,27
03031-06	03036-06	M6	3,5	15	7	1	3	9	13	0,44	0,21	2
03031-08	03036-08	M8	5	18	8	1,5	4	15	30	1,10	0,38	4
03031-10	03036-10	M10	6	23	9	2	5	20	35	1,30	0,60	8
03031-12	03036-12	M12	8	26	10	2,5	6	30	55	2,00	1,30	12
03031-16	03036-16	M16	10	33	14	3,5	8	65	125	3,90	3,00	31

Spring Plungers with hexagon socket and ball, strong spring force, LONG-LOK secured

Order No. Material steel	Order No. Material stainless steel	D	D1	L	L1	H	S	Spring force initial pressure F1 approx. N	Spring force final pressure F2 approx. N	Tightening torque approx. Nm	Loosening torque, after third unscrewing approx. Nm	≙ g
03031-203	03036-203	M3	1,5	9	4	0,5	1,5	5	7	0,10	0,07	0,23
03031-204	03036-204	M4	2,5	10	5	0,8	2	12	22	0,18	0,12	0,46
03031-205	03036-205	M5	3	14	6	0,9	2,5	19	30	0,12	0,08	1,27
03031-206	03036-206	M6	3,5	15	7	1	3	28	40	0,44	0,21	2
03031-208	03036-208	M8	5	18	8	1,5	4	47	73	1,10	0,38	4
03031-210	03036-210	M10	6	23	9	2	5	66	100	1,30	0,60	8
03031-212	03036-212	M12	8	26	10	2,5	6	66	120	2,00	1,30	12
03031-216	03036-216	M16	10	33	14	3,5	8	90	180	3,90	3,00	31

Spring Plungers

with hexagon socket and pressure pin, steel, LONG-LOK secured



Material:
Sleeve in steel quality class 5.8, pressure pin in steel or plastic, spring in spring steel D

LONG-LOK thread lock in nylon

Surface finish:
Black oxide finish;
pressure pin in steel, hardened

Sample order:
nlm 03041-12

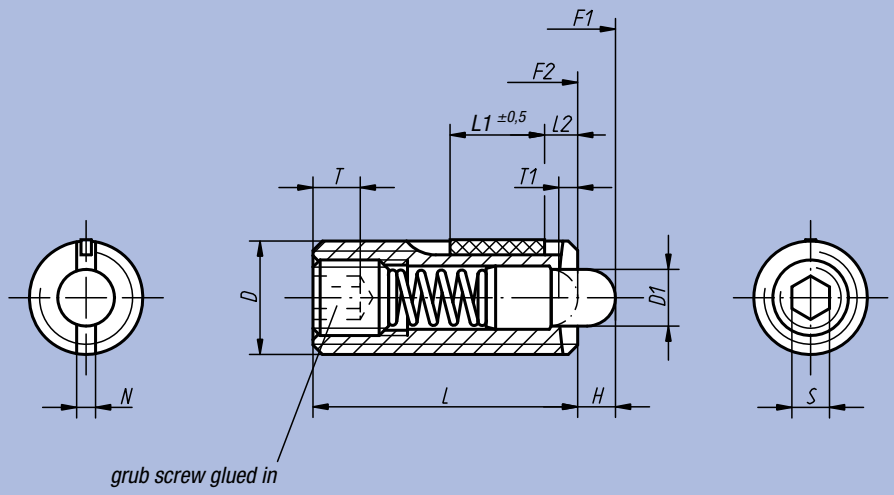

L2 = approx. two thread turns

assembly key

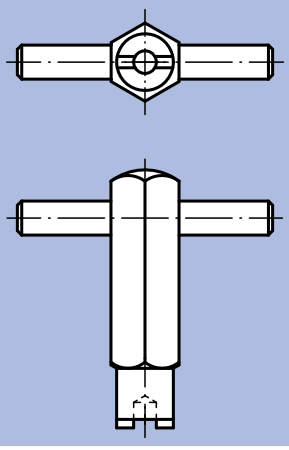

Spring Plungers

with hexagon socket and pressure pin, steel, LONG-LOK secured

Spring Plungers with hexagon socket and pressure pin, standard spring force, LONG-LOK secured

Order No. Surface finish pressure pin in steel	Order No. Surface finish pressure pin in plastic	D	D1	L	L1	H	T	T1	N	S	Spring force initial pressure F1 approx. N	Spring force final pressure F2 approx. N	Tightening torque approx. Nm	Loosening torque, after third unscrewing approx. Nm	□ g	Order No. assembly key
03041-05	03051-05	M5	2,4	18	7	2,3	2	0,8	0,8	1,5	6	20	0,12	0,08	1,3	03040-905
03041-06	03051-06	M6	2,7	20	7	2,5	2,5	1	1	2	7	20	0,45	0,22	2,5	03040-906
03041-08	03051-08	M8	3,5	22	8	3	3	1,4	1,2	2,5	9	35	1,05	0,37	6	03040-908
03041-10	03051-10	M10	4	22	9	3	3,5	1,4	1,6	3	9	35	1,30	0,60	9	03040-910
03041-12	03051-12	M12	6	28	10	4	5	2	2	4	10	55	2,00	1,30	16	03040-912
03041-16	03051-16	M16	7,5	32	14	5	6	2,5	2,5	5	45	100	3,90	3,00	35	03040-916

Spring Plungers with hexagon socket and pressure pin, light spring force, LONG-LOK secured

Order No. Surface finish pressure pin in steel	Order No. Surface finish pressure pin in plastic	D	D1	L	L1	H	T	T1	N	S	Spring force initial pressure F1 approx. N	Spring force final pressure F2 approx. N	Tightening torque approx. Nm	Loosening torque, after third unscrewing approx. Nm	□ g	Order No. assembly key
03041-105	03051-105	M5	2,4	18	7	2,3	2	0,8	0,8	1,5	3	10	0,12	0,08	1,3	03040-905
03041-106	03051-106	M6	2,7	20	7	2,5	2,5	1	1	2	3	9	0,45	0,22	2,5	03040-906
03041-108	03051-108	M8	3,5	22	8	3	3	1,4	1,2	2,5	4	16	1,05	0,37	6	03040-908
03041-110	03051-110	M10	4	22	9	3	3,5	1,4	1,6	3	4	16	1,30	0,60	9	03040-910
03041-112	03051-112	M12	6	28	10	4	5	2	2	4	5	27	2,00	1,30	16	03040-912
03041-116	03051-116	M16	7,5	32	14	5	6	2,5	2,5	5	20	45	3,90	3,00	35	03040-916

Spring Plungers with hexagon socket and pressure pin, strong spring force, LONG-LOK secured

Order No.	Surface finish	D	D1	L	L1	H	T	T1	N	S	Spring force initial pressure F1 approx. N	Spring force final pressure F2 approx. N	Tightening torque approx. Nm	Loosening torque, after third unscrewing approx. Nm	□ g	Order No. assembly key
03041-205	pressure pin in steel	M5	2,4	18	7	2,3	2	0,8	0,8	1,5	11	29	0,12	0,08	1,3	03040-905
03041-206	pressure pin in steel	M6	2,7	20	7	2,5	2,5	1	1	2	14	37	0,45	0,22	2,5	03040-906
03041-208	pressure pin in steel	M8	3,5	22	8	3	3	1,4	1,2	2,5	22	65	1,05	0,37	6	03040-908
03041-210	pressure pin in steel	M10	4	22	9	3	3,5	1,4	1,6	3	19	70	1,30	0,60	9	03040-910
03041-212	pressure pin in steel	M12	6	28	10	4	5	2	2	4	25	85	2,00	1,30	16	03040-912
03041-216	pressure pin in steel	M16	7,5	32	14	5	6	2,5	2,5	5	60	150	3,90	3,00	35	03040-916

Spring Plungers

with hexagon socket and pressure pin, stainless steel, LONG-LOK secured



Material:
Sleeve 1.4305,
pressure pin 1.4034 or plastic,
spring 1.4310

LONG-LOK thread lock in nylon

Surface finish:
Natural finish; pressure pin in stainless steel, hardened

Sample order:
nlm 03056-12

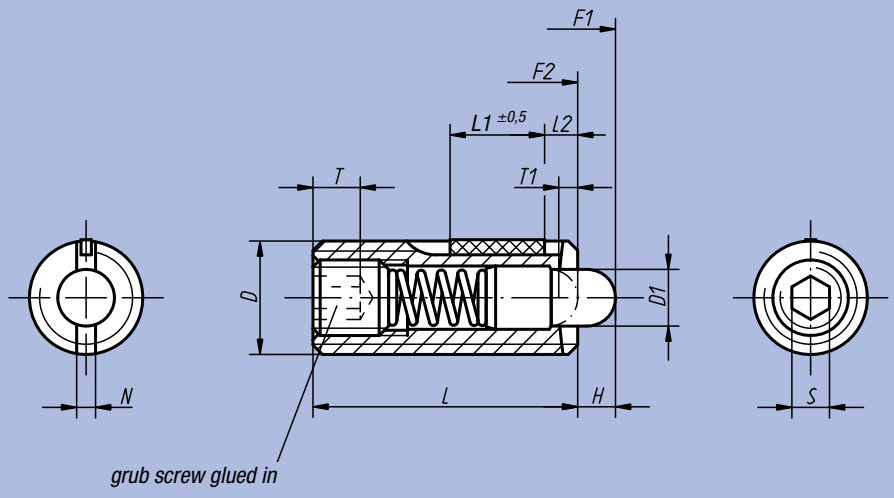

L2 = approx. two thread turns

assembly key

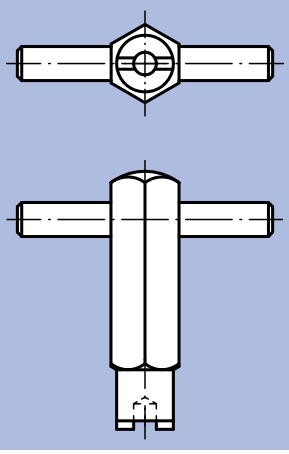

Spring Plungers

with hexagon socket and pressure pin, stainless steel, LONG-LOK secured

Spring Plungers with hexagon socket and pressure pin, standard spring force, LONG-LOK secured

Order No. Surface finish pressure pin in stainless steel	Order No. Surface finish pressure pin in plastic	D	D1	L	L1	H	T	T1	N	S	Spring force initial pressure F1 approx. N	Spring force final pressure F2 approx. N	Tightening torque approx. Nm	Loosening torque, after third unscrewing approx. Nm	≈ g	Order No. assembly key
03056-05	**03059-05**	M5	2,4	18	7	2,3	2	0,8	0,8	1,5	5	17	0,12	0,08	1,3	03040-905
03056-06	**03059-06**	M6	2,7	20	7	2,5	2,5	1	1	2	6	17	0,45	0,22	2,5	03040-906
03056-08	**03059-08**	M8	3,5	22	8	3	3	1,4	1,2	2,5	7	29	1,05	0,37	6	03040-908
03056-10	**03059-10**	M10	4	22	9	3	3,5	1,4	1,6	3	8	31	1,30	0,60	9	03040-910
03056-12	**03059-12**	M12	6	28	10	4	5	2	2	4	10	47	2,00	1,30	16	03040-912
03056-16	**03059-16**	M16	7,5	32	14	5	6	2,5	2,5	5	45	100	3,90	3,00	35	03040-916

Spring Plungers with hexagon socket and pressure pin, strong spring force, LONG-LOK secured

Order No.	Surface finish	D	D1	L	L1	H	T	T1	N	S	Spring force initial pressure F1 approx. N	Spring force final pressure F2 approx. N	Tightening torque approx. Nm	Loosening torque, after third unscrewing approx. Nm	≈ g	Order No. assembly key
03056-205	pressure pin in stainless steel	M5	2,4	18	7	2,3	2	0,8	0,8	1,5	9	26	0,12	0,08	1,3	03040-905
03056-206	pressure pin in stainless steel	M6	2,7	20	7	2,5	2,5	1	1	2	11	35	0,45	0,22	2,5	03040-906
03056-208	pressure pin in stainless steel	M8	3,5	22	8	3	3	1,4	1,2	2,5	15	48	1,05	0,37	6	03040-908
03056-210	pressure pin in stainless steel	M10	4	22	9	3	3,5	1,4	1,6	3	15	58	1,30	0,60	9	03040-910
03056-212	pressure pin in stainless steel	M12	6	28	10	4	5	2	2	4	19	74	2,00	1,30	16	03040-912

Spring Plungers

with head



Material:
Free cutting steel

Surface finish:
Black oxide finish, pressure pin hardened

Sample order:
nlm 03060-10

Note:
These spring plungers are chiefly used as ejectors and spring stops in machine construction.

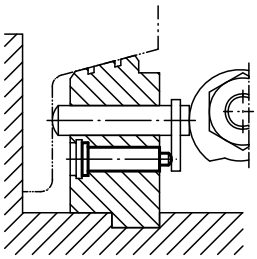

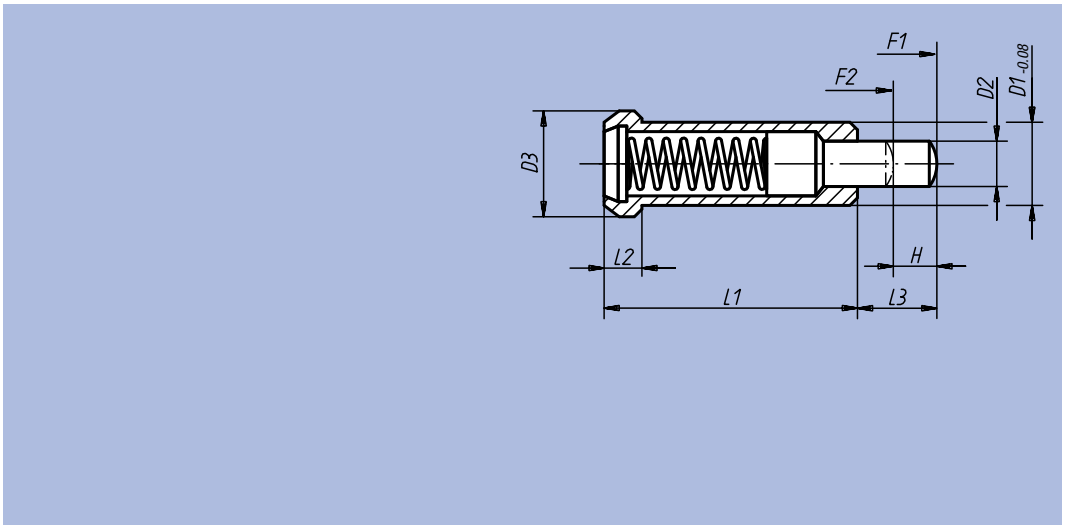

Order No.	D1	D2	D3	L1	L2	L3	H	Spring force initial pressure F1 approx. N	Spring force final pressure F2 approx. N	≈ g
03060-08	8	3,95	10	24	3,2	8	4,5	30	90	8
03060-10	10	5,95	13	30	4	10	5,5	42	110	14
03060-12	12	7,95	16	36	5	12	6,5	50	130	26

Locators



Material, surface finish:
Free-cutting steel, natural finish, hardened

Sample order:
nlm 03069-05020

Note:
If abrasion-resistant and exact locking is necessary, locators can be used together with spring plungers, especially with strong spring force.

$$A = H - \left(\frac{D1 + D2}{2} - \frac{\sqrt{2}}{2} \times D1 \right)$$

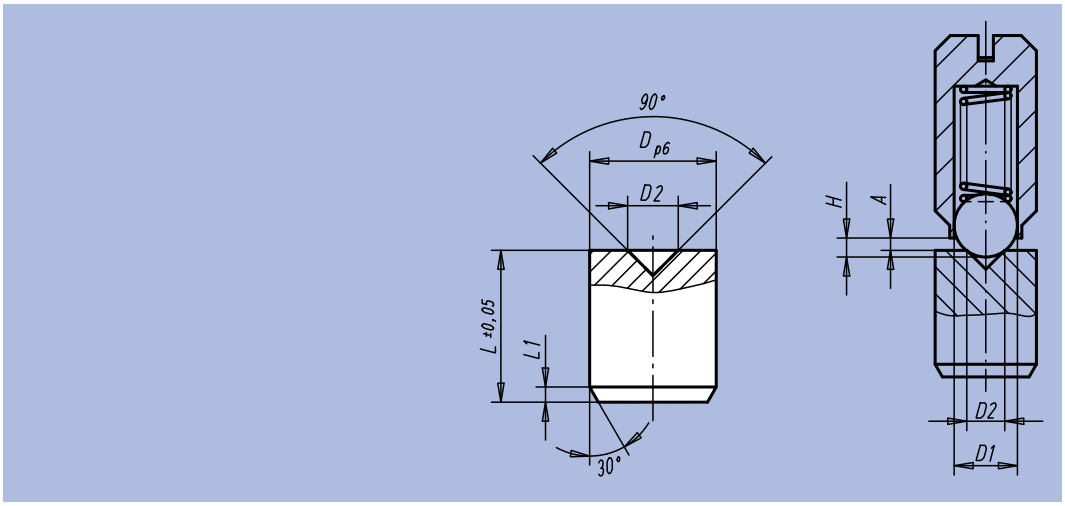

Order No.	Suitable for Spring Plunger D	D	D1	D2	H	L	L1
03069-04015	- / M4	4	see relevant product page for dimensions	1,5	see relevant product page for dimensions	5	0,5
03069-05020	ø 4 / M5	5		2		6	0,5
03069-06020	ø 5 / M6	6		2		8	0,7
03069-08030	ø 6 / M8	8		3		10	1
03069-10040	ø 8 / M10	10		4		12	1,2
03069-12060	ø 10 / M12	12		6		14	1,5
03069-16080	ø 12 / M16	16		8		18	2

Spring Plungers

smooth surface in stainless steel



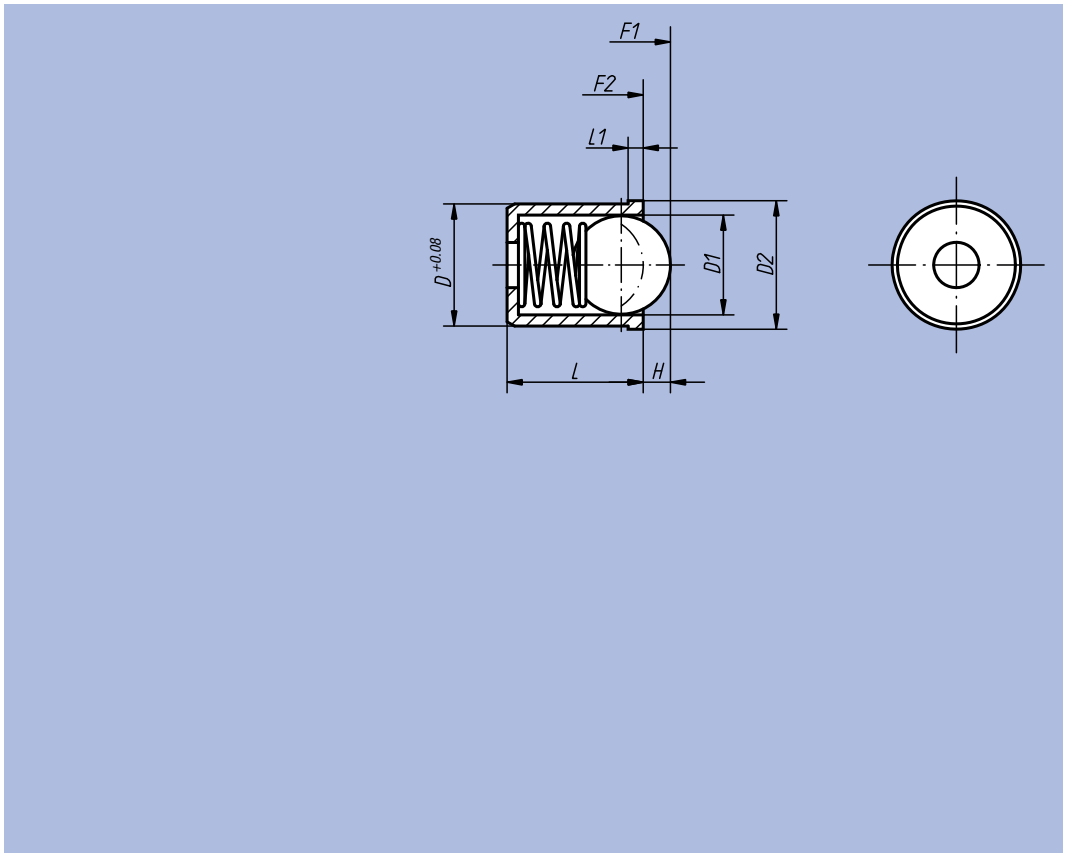

Material:
Sleeve and spring in stainless steel, ball in stainless steel or plastic

Surface finish:
Sleeve natural finish. Ball in stainless steel hardened, natural finish

Sample order:
nlm 03070-05

example:

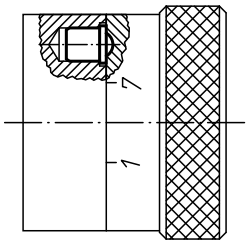

Order No.	Surface finish	D	D1	D2	L	L1	H	Spring force initial pressure F1 approx. N	Spring force final pressure F2 approx. N	g
03070-04	ball stainless steel	4	3	4,6	5	1	0,8	3	7	0,3
03070-05	ball stainless steel	5	4	5,6	6	1	1	4	7	0,6
03070-06	ball stainless steel	6	5	6,5	7	1	1,5	6	12	1
03070-08	ball stainless steel	8	6,5	8,5	9	1	1,8	6	12	2
03070-10	ball stainless steel	10	8	12	13,5	2,5	2,7	10	20	6
03070-12	ball stainless steel	12	10	14	16	2,5	3,5	15	25	10
03070-304	ball in plastic	4	3	4,6	5	1	0,5	3	7	0,3
03070-305	ball in plastic	5	4	5,6	6	1	0,6	4	7	0,6
03070-306	ball in plastic	6	5	6,5	7	1	1,1	6	12	1
03070-308	ball in plastic	8	6,5	8,5	9	1	1,5	6	12	2
03070-310	ball in plastic	10	8	12	13,5	2,5	2,3	10	20	6
03070-312	ball in plastic	12	10	14	16	2,5	3,1	15	25	10

Plungers

smooth surface in plastic



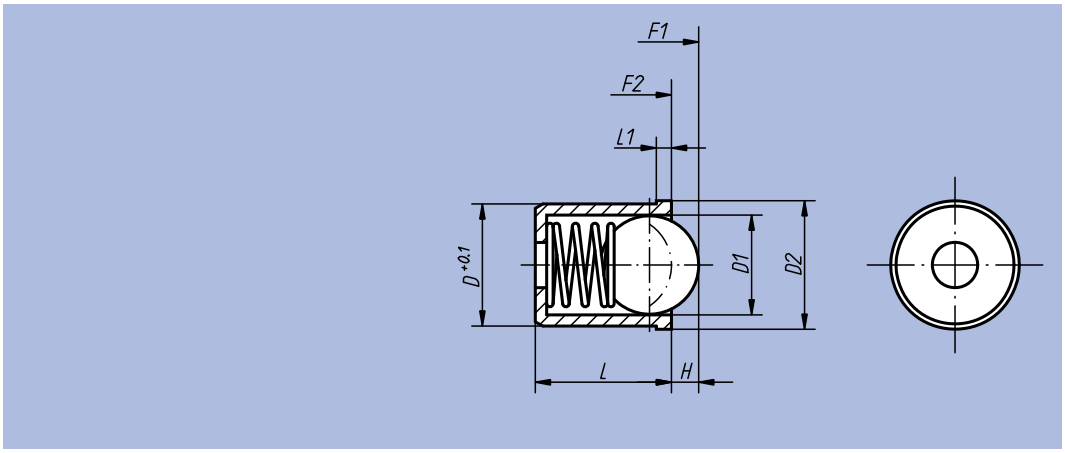

Material:
Sleeve in thermoplastic,
spring in stainless steel,
ball in stainless steel or plastic

Surface finish:
Sleeve black; ball in stainless steel
hardened, natural finish

Sample order:
nlm 03071-05

Order No.	Surface finish	D	D1	D2	L	L1	H	Spring force initial pressure F1 approx. N	Spring force final pressure F2 approx. N	g
03071-04	ball stainless steel	4	3	4,6	5	1	0,7	3	7	0,2
03071-05	ball stainless steel	5	4	5,6	6	1	1	4	7	0,4
03071-06	ball stainless steel	6	5	6,5	7	1	1,5	6	12	0,7
03071-08	ball stainless steel	8	6,5	8,5	9	1	1,8	6	12	1,5
03071-10	ball stainless steel	10	8	12	13,5	2,5	2,7	10	20	3,14
03071-12	ball stainless steel	12	10	14	16	2,5	3,5	15	25	5,66
03071-204	ball in plastic	4	3	4,6	5	1	0,9	3	7	0,17
03071-205	ball in plastic	5	4	5,6	6	1	1,2	4	7	0,35
03071-206	ball in plastic	6	5	6,5	7	1	1,5	6	12	0,66
03071-208	ball in plastic	8	6,5	8,5	9	1	2	6	12	1,46
03071-210	ball in plastic	10	8	12	13,5	2,5	2,7	10	20	1,44
03071-212	ball in plastic	12	10	14	16	2,5	3,5	15	25	2,29

Spring Plungers

smooth surface, without collar in stainless steel



Material:
Sleeve, ball and spring in stainless steel

Surface finish:
Ball hardened, natural finish

Sample order:
nlm 03072-208

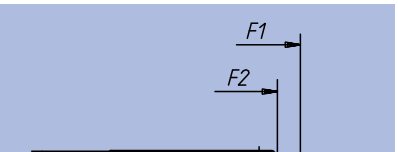

Order No.	D	D1	L	H	Spring force initial pressure F1 approx. N	Spring force final pressure F2 approx. N	g
03072-204	4	3	9	0,8	12	22	0,6
03072-205	5	4	12	1	19	30	1,2
03072-206	6	5	14	1,5	22	40	2,0
03072-208	8	6	16	1,8	42	73	4,8
03072-210	10	8	22	2,7	54	100	9,2
03072-212	12	10	24	3,2	54	122	14,5

Spring Plungers

with head



Material:
Free cutting steel or stainless steel

Surface finish:
Steel black oxide finish; stainless steel natural finish; ball in steel or stainless steel, hardened, natural finish

Sample order:
nlm 03073-10

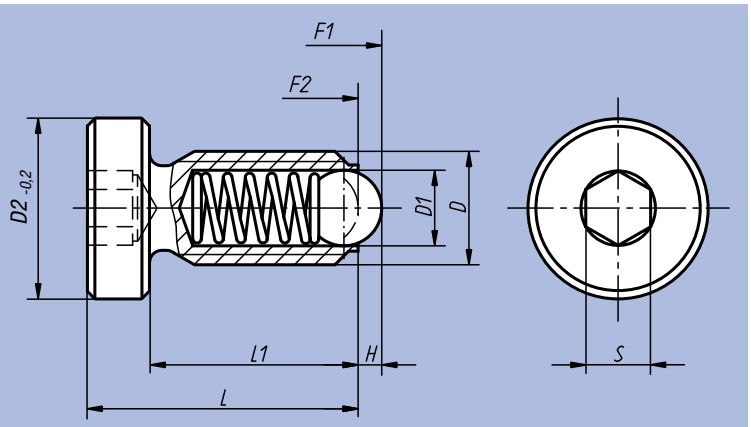

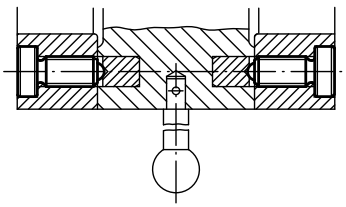

Order No. Material steel	Order No. Material stainless steel	D	D1	D2	L	L1	H	S	Spring force initial pressure F1 approx. N	Spring force final pressure F2 approx. N	g
03073-06	03073-061	M6	3,5	10	16	12	1	3	9	13	4
03073-08	03073-081	M8	5	13	21	16	1,5	4	15	30	9
03073-10	03073-101	M10	6	16	26	20	2	5	20	35	17
03073-12	03073-121	M12	8	18	32	25	2,5	6	30	55	28

Spring Plungers

smooth surface, double-sided



Material:
Sleeve in brass, balls and spring in stainless steel

Surface finish:
Balls hardened, natural finish

Sample order:
nlm 03074-05

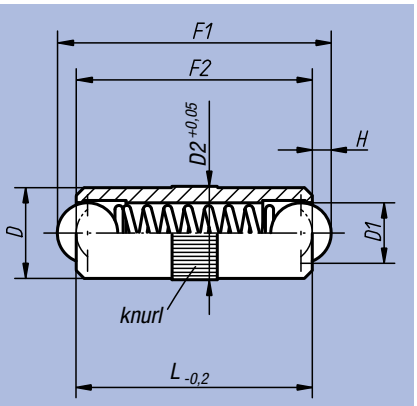

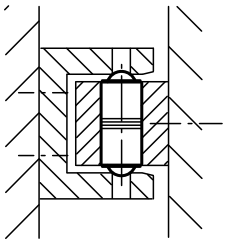

Order No.	D	D1	D2	L	H	Spring force initial pressure F1 approx. N	Spring force final pressure F2 approx. N	g
03074-04	4	3	4,05	10	0,9	3	7	0,7
03074-05	5	4	5,05	12	1,2	4	8	1,3
03074-06	6	5	6,05	16	1,6	6	10	2,4
03074-08	8	6	8,05	20	2	8	12	5,8
03074-10	10	8	10,05	24	2,9	10	16	10,5

Notes:

Eccentric Stops



Material:
Tempered steel
Surface finish:
Heat-treated and black oxide finish.
Sample order:
nlm 03080-10

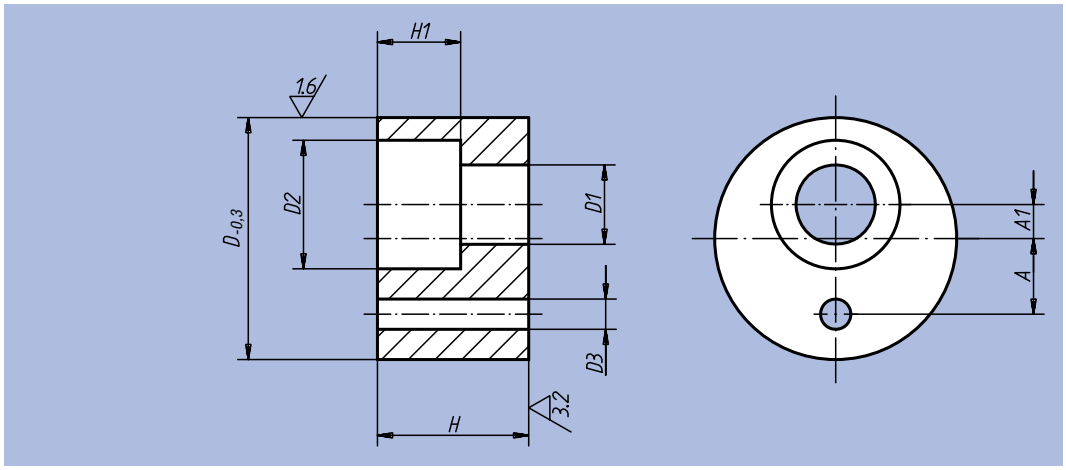

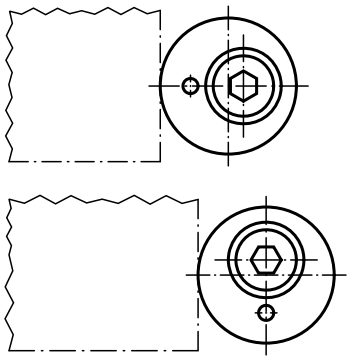

Order No.	D	D1	D2	D3	H	H1	A	A1	kg
03080-05	16	5,5	10	2	10	6	5	1,5	0,012
03080-06	20	6,6	11	2	12	7	6	2,5	0,023
03080-08	25	9	15	4	16	9	8	3,5	0,048
03080-10	32	11	18	4	20	11	10	4,5	0,100
03080-12	36	13,5	20	4	25	13	12	5,5	0,156

Stops

adjustable

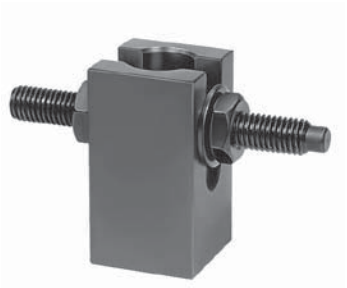

Material, surface finish:
Body tempered steel, black oxide finish; adjusting bolt tempered steel, heat-treated and black oxide finish
Sample order:
nlm 03082-12060
Note:
The setscrew can easilybe adjusted to the desired stop height viathe slot.

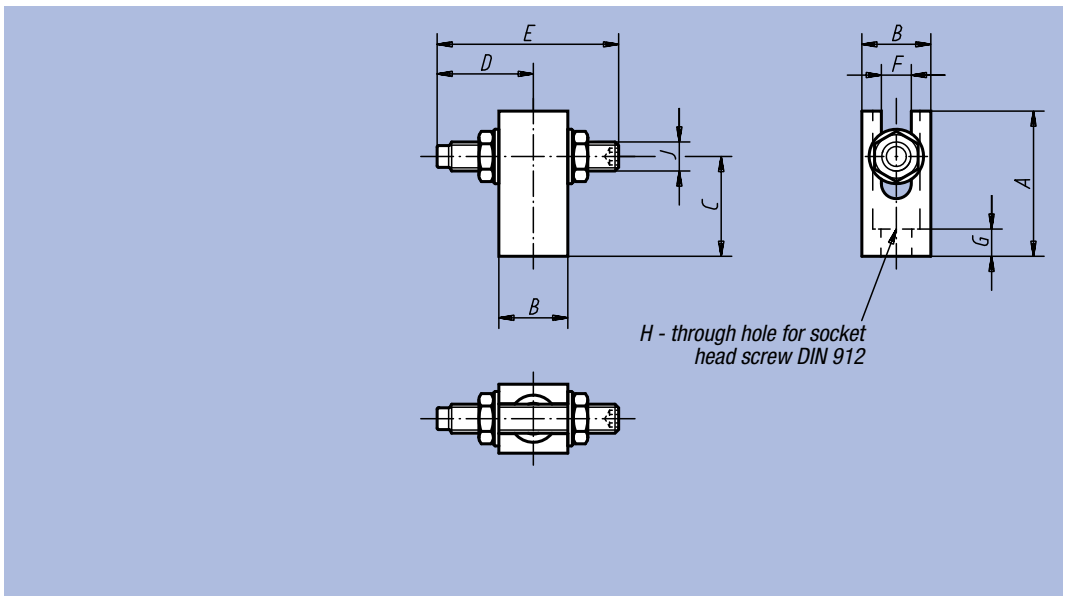

Order No.	A	B	C	D	E	F	G	H hole for	J	kg
03082-08045	45	25	20-35	20-50	70	8,5	7	M8	M8	0,180
03082-10055	55	30	25-45	25-65	90	10,5	9	M10	M10	0,315
03082-12060	60	32	30-50	30-70	100	12,5	11	M12	M12	0,390
03082-16080	80	38	40-65	35-70	100	16,5	15	M16	M16	0,710

Stops

adjustable



Material, surface finish:
Body tempered steel, black oxide finish; adjusting bolt tempered steel, heat-treated and black oxide finish

Sample order:
nlm 03083-16063

Note:
The Adjustable Stops have three tapped holes to hold the adjusting bolt.

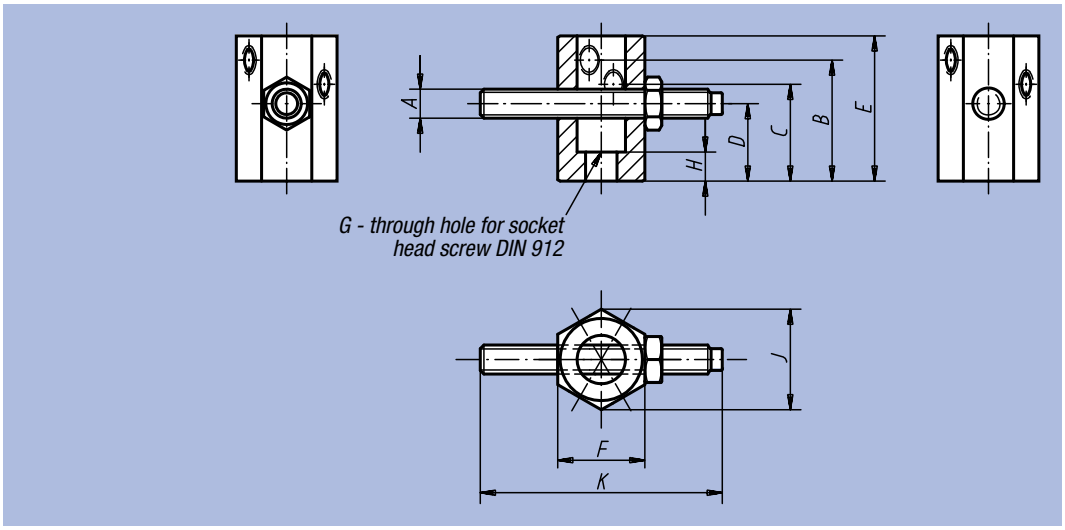

Order No.	A	B	C	D	E	F	G hole for	H	J	K	kg
03083-08032	M8	32	25	20	40	21	M8	7	24,3	50	0,095
03083-12050	M12	50	40	32	60	36	M12	12	41,6	100	0,420
03083-16063	M16	63	50	40	80	46	M16	16	53,1	100	0,880

Stops

adjustable



Material, surface finish:
Body tempered steel, black oxide finish; adjusting bolt tempered steel, heat-treated and black oxide finish

Sample order:
nlm 03084-08032

Note:
The Adjustable Stops have tapped holes to hold the adjusting bolt.

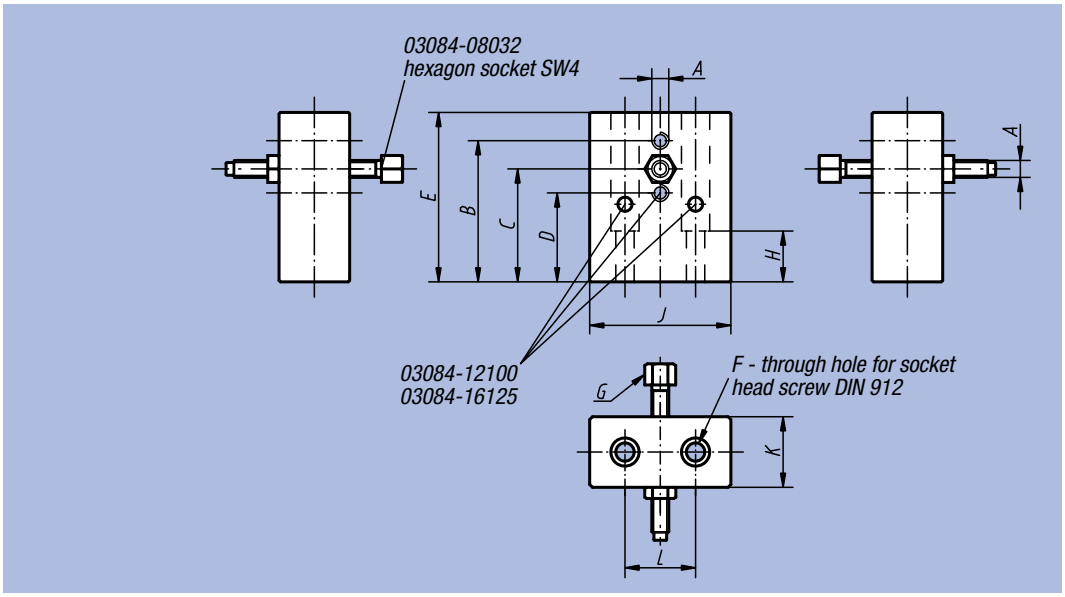

Order No.	A	B	C	D	E	F hole for	G	H	J	K	L	kg
03084-08032	M8	32	20	-	40	M8	M8x50	20	50	22	25	0,320
03084-12100	M12	100	80	63	120	M12	M12x110	37	100	50	50	4,085
03084-16125	M16	125	100	80	150	M16	M16x110	46	100	50	50	4,690

Mini-stops

adjustable



Material:
Tempered steel heat-treated

Surface finish:
Black oxide finish.

Sample order:
nlm 03085-10

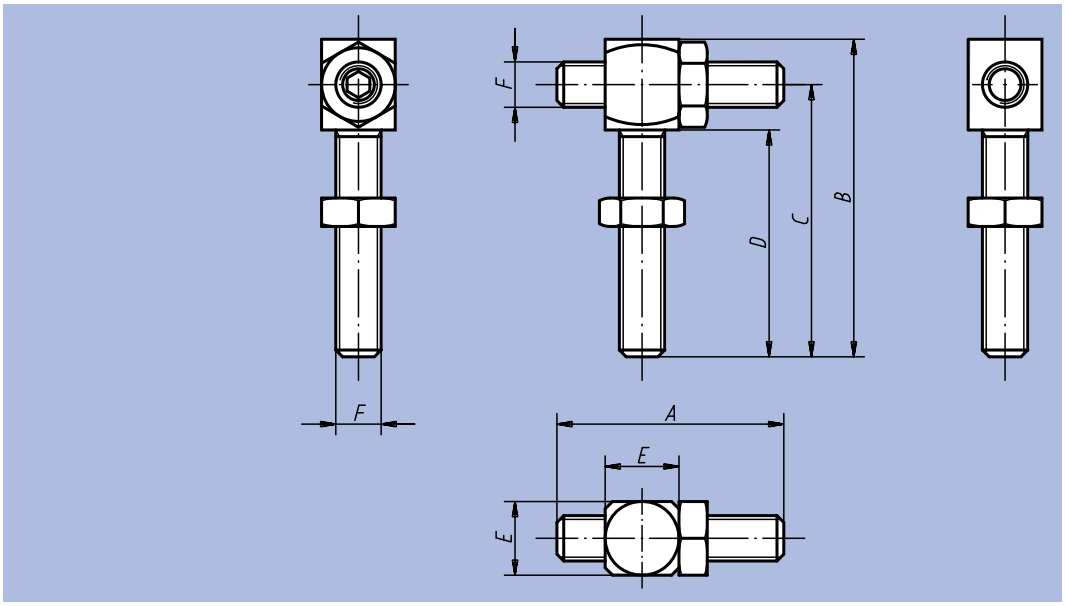

Order No.	A	B	C	D	E	F	kg
03085-08	40	56	48	40	13	M8	0,090
03085-10	50	70	60	50	17	M10	0,180
03085-12	60	84	72	60	19	M12	0,360
03085-16	80	112	96	80	24	M16	0,870

Spherical stops



Material:
Steel

Surface finish:
Black oxide finish. Domed head case-hardened.

Sample order:
nlm 03086-108

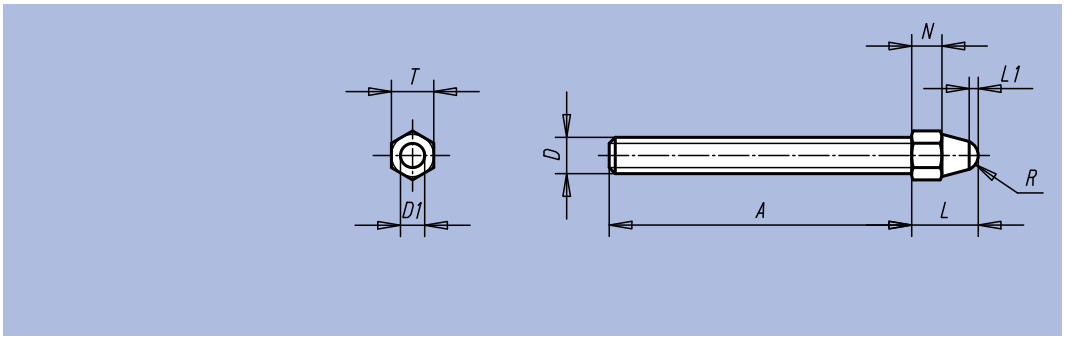

Order No.	A	D	D1	L	L1	N	R	T	kg
03086-106	50	M6	4	10	1,5	4	2,5	7	0,015
03086-108	65	M8	6	14	1,5	6	3,75	10	0,040
03086-110	85	M10	8	17	2	7	5	11	0,060
03086-112	110	M12	10	20	2,5	8	6,25	13	0,110
03086-116	130	M16	12	26	3	10	7,5	17	0,195

5D-Swivelling Stop



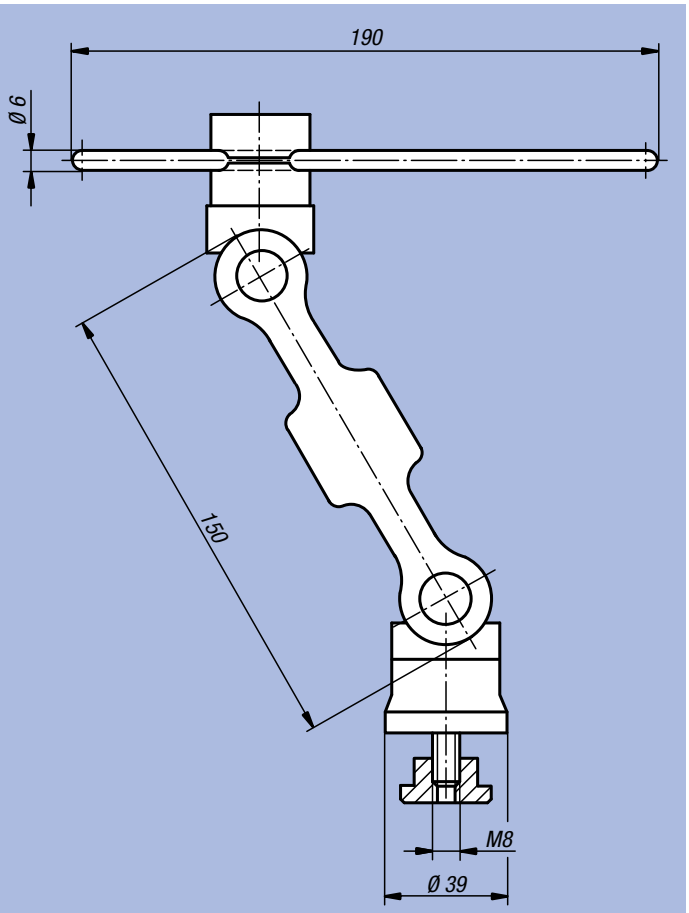

Material, surface finish:
Clamping joint, high-strength aluminium, anodized blue and black; hinge pins, support plate and stop bar in steel, black oxide finish

Sample order:
nlm 03088-15012

Note:
The 5D-swivelling stop serves, among other things, as a versatile instrument for positioning on machining tools or for assembly work. It is continuously adjustable, quickly and flexibly, in 5 axes.
Supplied complete with M8x12 T-slot nut and hex key.

On request:
Connecting element for combining several 5D-swivelling stops.

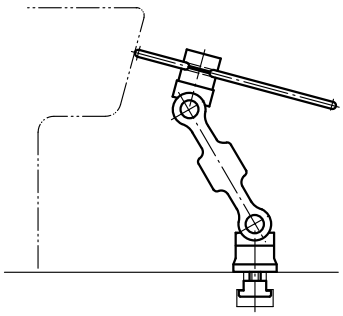

Order No.	Size	kg
03088-15012	150	0,684

Notes:

Locking Bolts



Material:
- Steel version, locking pin hardened: quality class 5.8
- Stainless steel version, locking pin hardened: threaded sleeve 1.4305 locking pin 1.4034
- Stainless steel version, locking pin not hardened: threaded sleeve 1.4305 locking pin 1.4305

Mushroom knob in anthracite grey thermoplastic

Surface finish:
- Steel version, locking pin hardened: black oxide finish, locking pin ground
- Stainless steel version, locking pin hardened: natural finish, locking pin ground
- Stainless steel version, locking pin not hardened: natural finish, locking pin ground

Sample order:
nlm 03089-04206

Note:
Locking Bolts are used to prevent any change in locking position due to lateral forces. A new locking position can only be set after the bolt has been manually disengaged. Form C or D is recommended for applications in which gradual disengagement of the locking bolt is desired, without any relocking of the locking pin.

On request:
Special versions and spacer rings.

Form A
without locking slot
without locking nut

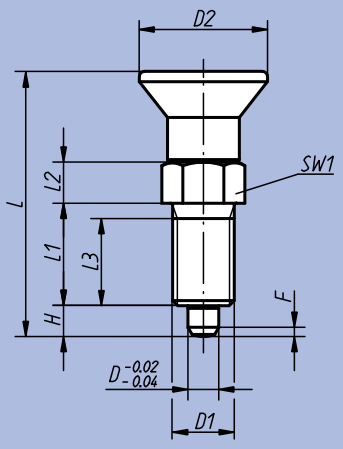

Form B
without locking slot
with locking nut

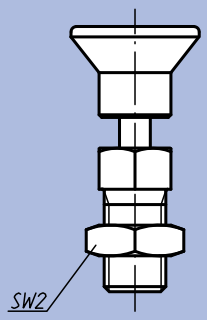

Form C
with locking slot
without locking nut

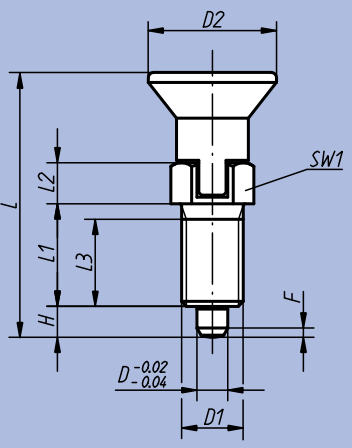

Form D
with locking slot
with locking nut

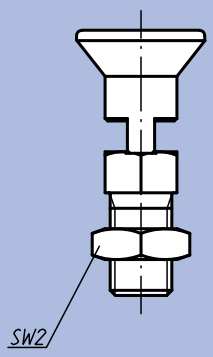

Locking Bolts

Locking Bolts, in steel, locking pin hardened

Order No. Form A	Order No. Form B	Order No. Form C	Order No. Form D	D	D1	D2	L	L1	L2	L3	H	SW1	SW2	F x 30°	Spring force initial pressure F1 approx. N	Spring force final pressure F2 approx. N
03089-1903	03089-2903	03089-3903	03089-4903	3	M6x0,75	14	31,5	12	5	10	3,5	8	10	0,8	4,5	11
03089-1004	03089-2004	03089-3004	03089-4004	4	M8x1	18	38,5	15	6	13	4	10	13	1	6	12
03089-1105	03089-2105	03089-3105	03089-4105	5	M10x1	21	43,5	17	7	15	5	13	17	1,3	5	12
03089-1206	03089-2206	03089-3206	03089-4206	6	M12x1,5	25	51,7	20	8	17	6	14	19	1,8	6	14
03089-1308	03089-2308	03089-3308	03089-4308	8	M16x1,5	33	68	26	10	23	8	19	24	2,3	15	35
03089-1410	03089-2410	03089-3410	03089-4410	10	M20x1,5	33	74	28	12	25	10	22	30	2,8	15	34
03089-1412	03089-2412	03089-3412	03089-4412	12	M20x1,5	33	78	28	14	25	12	22	30	2,8	15	39
03089-1516	03089-2516	03089-3516	03089-4516	16	M24x2	40	96	32	18	28	16	27	36	3,2	20	46

Locking Bolts, in stainless steel, locking pin hardened

Order No. Form A	Order No. Form B	Order No. Form C	Order No. Form D	D	D1	D2	L	L1	L2	L3	H	SW1	SW2	F x 30°	Spring force initial pressure F1 approx. N	Spring force final pressure F2 approx. N
03089-01903	03089-02903	03089-03903	03089-04903	3	M6x0,75	14	31,5	12	5	10	3,5	8	10	0,8	4,5	11
03089-01004	03089-02004	03089-03004	03089-04004	4	M8x1	18	38,5	15	6	13	4	10	13	1	6	12
03089-01105	03089-02105	03089-03105	03089-04105	5	M10x1	21	43,5	17	7	15	5	13	17	1,3	5	12
03089-01206	03089-02206	03089-03206	03089-04206	6	M12x1,5	25	51,7	20	8	17	6	14	19	1,8	6	14
03089-01308	03089-02308	03089-03308	03089-04308	8	M16x1,5	33	68	26	10	23	8	19	24	2,3	15	35
03089-01410	03089-02410	03089-03410	03089-04410	10	M20x1,5	33	74	28	12	25	10	22	30	2,8	15	34
03089-01412	03089-02412	03089-03412	03089-04412	12	M20x1,5	33	78	28	14	25	12	22	30	2,8	15	39
03089-01516	03089-02516	03089-03516	03089-04516	16	M24x2	40	96	32	18	28	16	27	36	3,2	20	46

Locking Bolts, in stainless steel, locking pin not hardened

Order No. Form A	Order No. Form B	Order No. Form C	Order No. Form D	D	D1	D2	L	L1	L2	L3	H	SW1	SW2	F x 30°	Spring force initial pressure F1 approx. N	Spring force final pressure F2 approx. N
03089-11903	03089-12903	03089-13903	03089-14903	3	M6x0,75	14	31,5	12	5	10	3,5	8	10	0,8	4,5	11
03089-11004	03089-12004	03089-13004	03089-14004	4	M8x1	18	38,5	15	6	13	4	10	13	1	6	12
03089-11105	03089-12105	03089-13105	03089-14105	5	M10x1	21	43,5	17	7	15	5	13	17	1,3	5	12
03089-11206	03089-12206	03089-13206	03089-14206	6	M12x1,5	25	51,7	20	8	17	6	14	19	1,8	6	14
03089-11308	03089-12308	03089-13308	03089-14308	8	M16x1,5	33	68	26	10	23	8	19	24	2,3	15	35
03089-11410	03089-12410	03089-13410	03089-14410	10	M20x1,5	33	74	28	12	25	10	22	30	2,8	15	34
03089-11412	03089-12412	03089-13412	03089-14412	12	M20x1,5	33	78	28	14	25	12	22	30	2,8	15	39
03089-11516	03089-12516	03089-13516	03089-14516	16	M24x2	40	96	32	18	28	16	27	36	3,2	20	46

Locking Bolts

with extended locking pin



Material:
- Steel version, locking pin hardened:
  quality class 5.8
- Stainless steel version, locking pin hardened:
  threaded sleeve 1.4305
  locking pin 1.4034
- Stainless steel version, locking pin not hardened:
  threaded sleeve 1.4305
  locking pin 1.4305

Mushroom knob in anthracite grey thermoplastic

Surface finish:
- Steel version, locking pin hardened:
  black oxide finish, locking pin ground
- Stainless steel version, locking pin hardened:
  natural finish, locking pin ground
- Stainless steel version, locking pin not hardened:
  natural finish, locking pin ground

Sample order:
nlm 03089-21004

Note:
Locking Bolts are used to prevent any change in locking position due to lateral forces. A new locking position can only be set after the bolt has been manually disengaged.

On request:
Special versions and spacer rings.

Form A
without locking slot
without locking nut

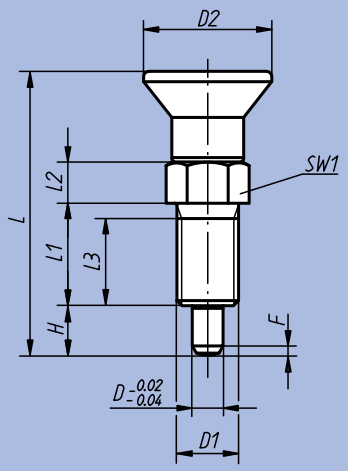

Form B
without locking slot
with locking nut

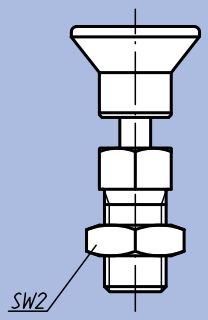

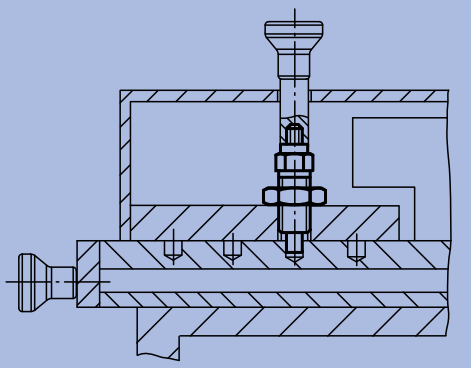

Locking Bolts

with extended locking pin

Locking Bolts, in steel, locking pin hardened

Order No. Form A	Order No. Form B	D	D1	D2	L	L1	L2	L3	H	SW1	SW2	F x 30°	Spring force initial pressure F1 approx. N	Spring force final pressure F2 approx. N
03089-21903	03089-22903	3	M6x0,75	14	33	12	5	10	5	8	10	0,8	4,5	11
03089-21004	03089-22004	4	M8x1	18	40,5	15	6	13	6	10	13	1	6	15
03089-21105	03089-22105	5	M10x1	21	46,5	17	7	15	8	13	17	1,3	5	16
03089-21206	03089-22206	6	M12x1,5	25	54,7	20	8	17	9	14	19	1,8	6	18
03089-21308	03089-22308	8	M16x1,5	33	72	26	10	23	12	19	24	2,3	15	45
03089-21410	03089-22410	10	M20x1,5	33	79	28	12	25	15	22	30	2,8	15	43
03089-21412	03089-22412	12	M20x1,5	33	84	28	14	25	18	22	30	2,8	15	51
03089-21516	03089-22516	16	M24x2	40	104	32	18	28	24	27	36	3,2	20	60

Locking Bolts, in stainless steel, locking pin hardened

Order No. Form A	Order No. Form B	D	D1	D2	L	L1	L2	L3	H	SW1	SW2	F x 30°	Spring force initial pressure F1 approx. N	Spring force final pressure F2 approx. N
03089-201903	03089-202903	3	M6x0,75	14	33	12	5	10	5	8	10	0,8	4,5	11
03089-201004	03089-202004	4	M8x1	18	40,5	15	6	13	6	10	13	1	6	15
03089-201105	03089-202105	5	M10x1	21	46,5	17	7	15	8	13	17	1,3	5	16
03089-201206	03089-202206	6	M12x1,5	25	54,7	20	8	17	9	14	19	1,8	6	18
03089-201308	03089-202308	8	M16x1,5	33	72	26	10	23	12	19	24	2,3	15	45
03089-201410	03089-202410	10	M20x1,5	33	79	28	12	25	15	22	30	2,8	15	43
03089-201412	03089-202412	12	M20x1,5	33	84	28	14	25	18	22	30	2,8	15	51
03089-201516	03089-202516	16	M24x2	40	104	32	18	28	24	27	36	3,2	20	60

Locking Bolts, in stainless steel, locking pin not hardened

Order No. Form A	Order No. Form B	D	D1	D2	L	L1	L2	L3	H	SW1	SW2	F x 30°	Spring force initial pressure F1 approx. N	Spring force final pressure F2 approx. N
03089-211903	03089-212903	3	M6x0,75	14	33	12	5	10	5	8	10	0,8	4,5	11
03089-211004	03089-212004	4	M8x1	18	40,5	15	6	13	6	10	13	1	6	15
03089-211105	03089-212105	5	M10x1	21	46,5	17	7	15	8	13	17	1,3	5	16
03089-211206	03089-212206	6	M12x1,5	25	54,7	20	8	17	9	14	19	1,8	6	18
03089-211308	03089-212308	8	M16x1,5	33	72	26	10	23	12	19	24	2,3	15	45
03089-211410	03089-212410	10	M20x1,5	33	79	28	12	25	15	22	30	2,8	15	43
03089-211412	03089-212412	12	M20x1,5	33	84	28	14	25	18	22	30	2,8	15	51
03089-211516	03089-212516	16	M24x2	40	104	32	18	28	24	27	36	3,2	20	60

Locking Bolts

short version



Material:
- Steel version, locking pin hardened: quality class 5.8
- Stainless steel version, locking pin not hardened:
  threaded sleeve 1.4305
  locking pin 1.4305

Mushroom knob in anthracite grey thermoplastic

Surface finish:
- Steel version, locking pin hardened: black oxide finish, locking pin ground
- Stainless steel version, locking pin not hardened:
  natural finish, locking pin ground

Sample order:
nlm 03089-16206

Note:
Locking Bolts are used to prevent any change in locking position due to lateral forces. A new locking position can only be set after the bolt has been manually disengaged. Form C or D is recommended for applications in which gradual disengagement of the locking bolt is desired, without any relocking of the locking pin.

On request:
Special versions and spacer rings.

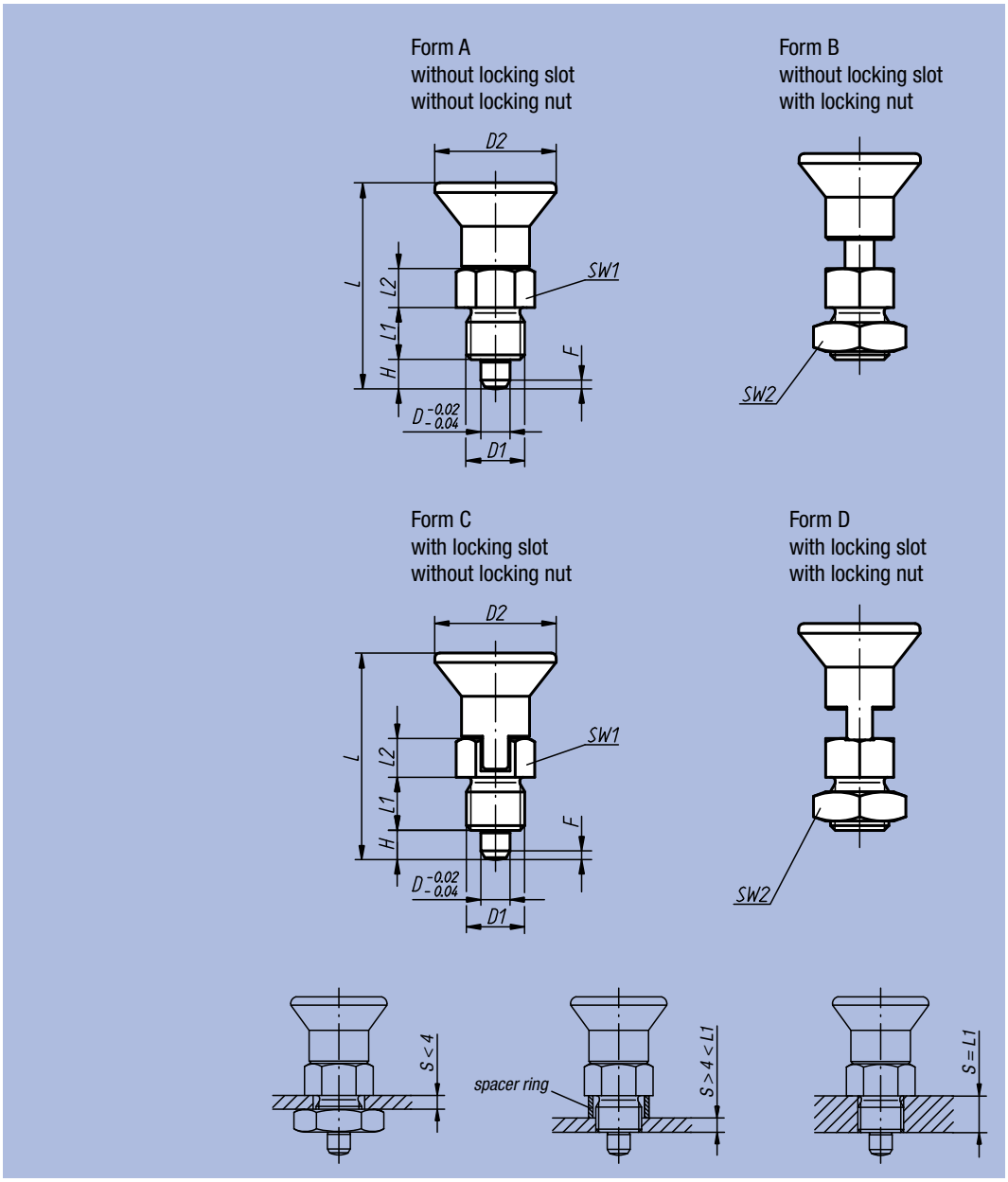

Locking Bolts, short version, in steel, locking pin hardened

Order No. Form A	Order No. Form B	Order No. Form C	Order No. Form D	D	D1	D2	L	L1	L2	H	SW1	SW2	F x 30°	Spring force initial pressure F1 approx. N	Spring force final pressure F2 approx. N
03089-5004	03089-6004	03089-7004	03089-8004	4	M8x1	18	29,5	6	6	4	10	13	1	6	12
03089-5105	03089-6105	03089-7105	03089-8105	5	M10x1	21	34,5	8	7	5	13	17	1,3	5	12
03089-5206	03089-6206	03089-7206	03089-8206	6	M12x1,5	25	41,7	10	8	6	14	19	1,8	6	14
03089-5308	03089-6308	03089-7308	03089-8308	8	M16x1,5	33	54	12	10	8	19	24	2,3	14	28
03089-5410	03089-6410	03089-7410	03089-8410	10	M20x1,5	33	61	15	12	10	22	30	2,8	15	32

Locking Bolts, short version, in steel, locking pin not hardened

Order No. Form A	Order No. Form B	Order No. Form C	Order No. Form D	D	D1	D2	L	L1	L2	H	SW1	SW2	F x 30°	Spring force initial pressure F1 approx. N	Spring force final pressure F2 approx. N
03089-15004	03089-16004	03089-17004	03089-18004	4	M8x1	18	29,5	6	6	4	10	13	1	6	12
03089-15105	03089-16105	03089-17105	03089-18105	5	M10x1	21	34,5	8	7	5	13	17	1,3	5	12
03089-15206	03089-16206	03089-17206	03089-18206	6	M12x1,5	25	41,7	10	8	6	14	19	1,8	6	14
03089-15308	03089-16308	03089-17308	03089-18308	8	M16x1,5	33	54	12	10	8	19	24	2,3	14	28
03089-15410	03089-16410	03089-17410	03089-18410	10	M20x1,5	33	61	15	12	10	22	30	2,8	15	32

Locking Bolts

in Stainless Steel



Material:
- Locking pin hardened:
  threaded sleeve 1.4305
  locking pin 1.4034
- Locking pin not hardened:
  threaded sleeve 1.4305
  locking pin 1.4305

Mushroom knob 1.4305,
electrolytic-polish

Surface finish:
Natural finish; locking pin ground

Sample order:
nlm 03089-001004

Note:
Locking Bolts are used to prevent any change in locking position due to lateral forces. A new locking position can only be set after the bolt has been manually disengaged.

On request:
Special versions and spacer rings.

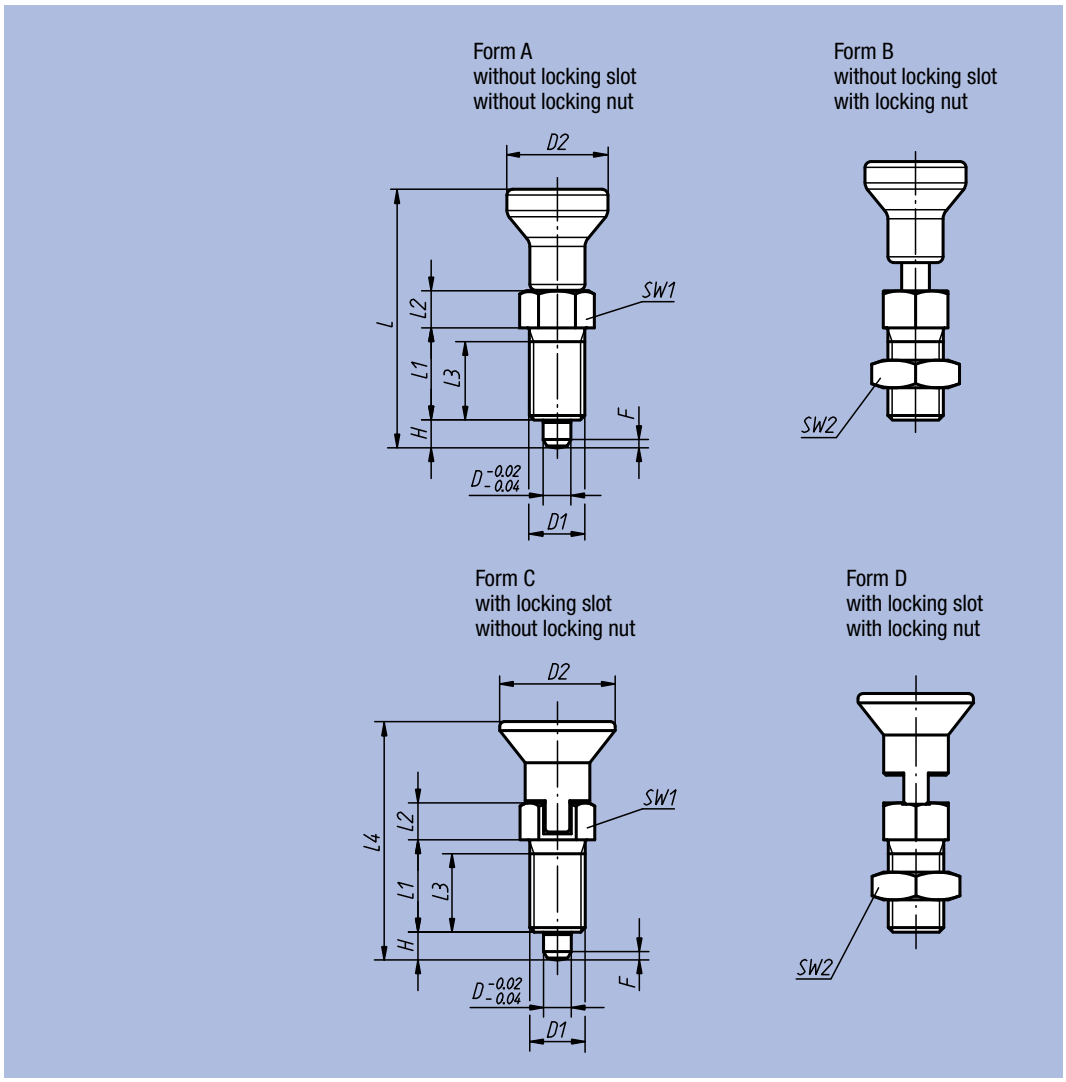

Locking Bolts in stainless steel, locking pin hardened

Order No. Form A	Order No. Form B	Order No. Form C	Order No. Form D	D	D1	D2	L	L1	L2	L3	L4	H	SW1	SW2	F x 30°	Spring force initial pressure F1 approx. N	Spring force final pressure F2 approx. N
03089-001903	03089-002903	03089-003903	03089-004903	3	M6x0,75	14	34,5	12	5	10	31,5	3,5	8	10	0,8	4,5	9
03089-001004	03089-002004	03089-003004	03089-004004	4	M8x1	18	43	15	6	13	38,5	4	10	13	1	6	12
03089-001105	03089-002105	03089-003105	03089-004105	5	M10x1	21	50	17	7	15	43,5	5	13	17	1,3	5	12
03089-001206	03089-002206	03089-003206	03089-004206	6	M12x1,5	25	59	20	8	17	51,7	6	14	19	1,8	6	14
03089-001308	03089-002308	03089-003308	03089-004308	8	M16x1,5	33	77	26	10	23	68	8	19	24	2,3	15	35
03089-001410	03089-002410	03089-003410	03089-004410	10	M20x1,5	33	83	28	12	25	74	10	22	30	2,8	15	34
03089-001412	03089-002412	03089-003412	03089-004412	12	M20x1,5	33	87	28	14	25	78	12	22	30	2,8	15	39
03089-001516	03089-002516	03089-003516	03089-004516	16	M24x2	40	106	32	18	28	96	16	27	36	3,2	20	46

Locking Bolts in stainless steel, locking pin not hardened

Order No. Form A	Order No. Form B	Order No. Form C	Order No. Form D	D	D1	D2	L	L1	L2	L3	L4	H	SW1	SW2	F x 30°	Spring force initial pressure F1 approx. N	Spring force final pressure F2 approx. N
03089-111903	03089-112903	03089-113903	03089-114903	3	M6x0,75	14	34,5	12	5	10	31,5	3,5	8	10	0,8	4,5	9
03089-111004	03089-112004	03089-113004	03089-114004	4	M8x1	18	43	15	6	13	38,5	4	10	13	1	6	12
03089-111105	03089-112105	03089-113105	03089-114105	5	M10x1	21	50	17	7	15	43,5	5	13	17	1,3	5	12
03089-111206	03089-112206	03089-113206	03089-114206	6	M12x1,5	25	59	20	8	17	51,7	6	14	19	1,8	6	14
03089-111308	03089-112308	03089-113308	03089-114308	8	M16x1,5	33	77	26	10	23	68	8	19	24	2,3	15	35
03089-111410	03089-112410	03089-113410	03089-114410	10	M20x1,5	33	83	28	12	25	74	10	22	30	2,8	15	34
03089-111412	03089-112412	03089-113412	03089-114412	12	M20x1,5	33	87	28	14	25	78	12	22	30	2,8	15	39
03089-111516	03089-112516	03089-113516	03089-114516	16	M24x2	40	106	32	18	28	96	16	27	36	3,2	20	46

Locking Bolts



Material:
- Steel version, locking pin hardened: quality class 5.8
- Stainless steel version, locking pin hardened:
  threaded sleeve 1.4305
  locking pin 1.4034
- Stainless steel version, locking pin not hardened:
  threaded sleeve 1.4305
  locking pin 1.4305

Mushroom knob in anthracite grey thermoplastic

Surface finish:
- Steel version, locking pin hardened: black oxide finish, locking pin ground
- Stainless steel version, locking pin hardened:
  natural finish, locking pin ground
- Stainless steel version, locking pin not hardened:
  natural finish, locking pin ground

Sample order:
nlm 03090-04206

Note:
Locking Bolts are used to prevent any change in locking position due to lateral forces. A new locking position can only be set after the bolt has been manually disengaged. Form C or D is recommended for applications in which gradual disengagement of the locking bolt is desired, without any relocking of the locking pin.

On request:
Special versions and spacer rings.

Form A
without locking slot
without locking nut

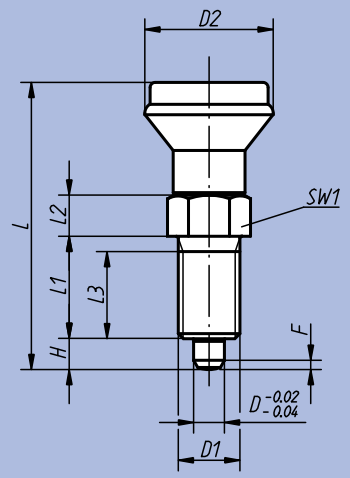

Form B
without locking slot
with locking nut

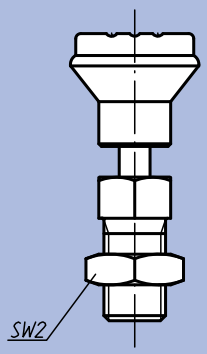

Form C
with locking slot
without locking nut

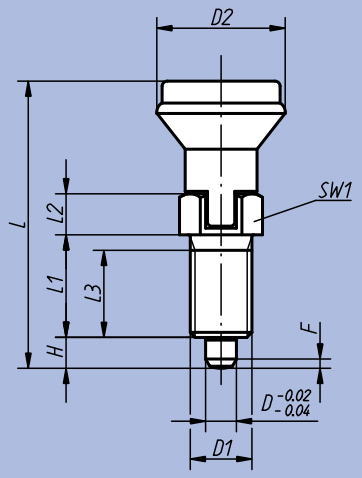

Form D
with locking slot
with locking nut

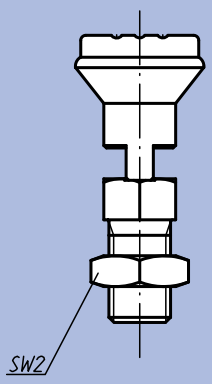

Locking Bolts

Locking Bolts, in steel, locking pin hardened

Order No. Form A	Order No. Form B	Order No. Form C	Order No. Form D	D	D1	D2	L	L1	L2	L3	H	SW1	SW2	F x 30°	Spring force initial pressure F1 approx. N	Spring force final pressure F2 approx. N
03090-1105	03090-2105	03090-3105	03090-4105	5	M10x1	21	47	17	7	15	5	13	17	1,3	5	12
03090-1206	03090-2206	03090-3206	03090-4206	6	M12x1,5	25	56	20	8	17	6	14	19	1,8	6	14
03090-1308	03090-2308	03090-3308	03090-4308	8	M16x1,5	33	74	26	10	23	8	19	24	2,3	15	35
03090-1410	03090-2410	03090-3410	03090-4410	10	M20x1,5	33	80	28	12	25	10	22	30	2,8	15	34

Locking Bolts, in stainless steel, locking pin hardened

Order No. Form A	Order No. Form B	Order No. Form C	Order No. Form D	D	D1	D2	L	L1	L2	L3	H	SW1	SW2	F x 30°	Spring force initial pressure F1 approx. N	Spring force final pressure F2 approx. N
03090-01105	03090-02105	03090-03105	03090-04105	5	M10x1	21	47	17	7	15	5	13	17	1,3	5	12
03090-01206	03090-02206	03090-03206	03090-04206	6	M12x1,5	25	56	20	8	17	6	14	19	1,8	6	14
03090-01308	03090-02308	03090-03308	03090-04308	8	M16x1,5	33	74	26	10	23	8	19	24	2,3	15	35
03090-01410	03090-02410	03090-03410	03090-04410	10	M20x1,5	33	80	28	12	25	10	22	30	2,8	15	34

Locking Bolts, in stainless steel, locking pin not hardened

Order No. Form A	Order No. Form B	Order No. Form C	Order No. Form D	D	D1	D2	L	L1	L2	L3	H	SW1	SW2	F x 30°	Spring force initial pressure F1 approx. N	Spring force final pressure F2 approx. N
03090-11105	03090-12105	03090-13105	03090-14105	5	M10x1	21	47	17	7	15	5	13	17	1,3	5	12
03090-11206	03090-12206	03090-13206	03090-14206	6	M12x1,5	25	56	20	8	17	6	14	19	1,8	6	14
03090-11308	03090-12308	03090-13308	03090-14308	8	M16x1,5	33	74	26	10	23	8	19	24	2,3	15	35
03090-11410	03090-12410	03090-13410	03090-14410	10	M20x1,5	33	80	28	12	25	10	22	30	2,8	15	34

Locking Bolts



Material:
Steel quality class 5.8

Surface finish:
Blue chromated

Sample order:
nlm 03091-1206

Note:
Locking Bolts are used to prevent any change in locking position due to lateral forces. A new locking position can only be set after the bolt has been manually disengaged.

On request:
Special versions.

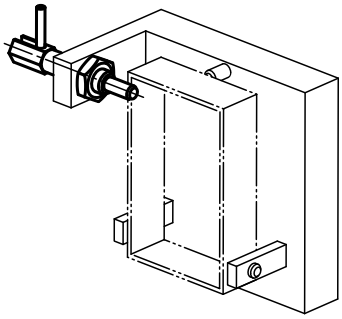

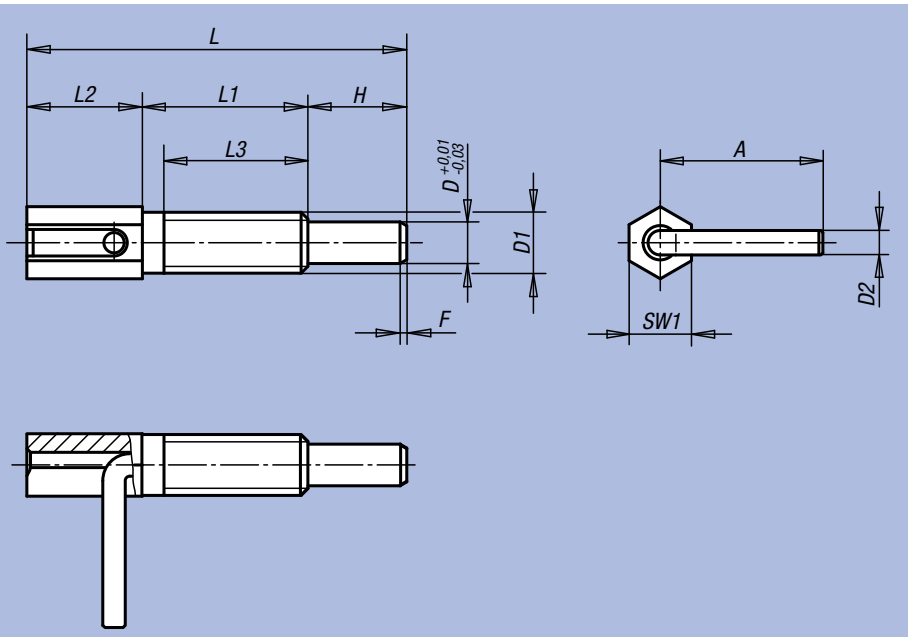

Order No.	D	D1	D2	L	L1	L2	L3	H	A	SW1	F x 30°	Spring force initial pressure F1 approx. N	Spring force final pressure F2 approx. N	Tightening torque max. Nm
03091-1104	4	M6	2,3	41,5	20	12	17	9,5	15,5	6	0,7	3	10	1,6
03091-1905	5	M8	3	54	27	15	24	12	19,2	8	0,9	3,5	13,5	4,5
03091-1206	6	M10	3,5	65	33,5	17,5	30	14	22,9	10	1,1	4	16	10
03091-1308	8	M12	4,7	73	31,8	22,2	28	19	31,2	12	1,3	4	22	13
03091-1410	10	M16	4,7	102,5	50,5	27	44,5	25	32,7	16	1,6	4	23	42

Notes:

Locking Bolts



Material:
- Steel version, locking pin hardened: quality class 5.8
- Stainless steel version, locking pin hardened: threaded sleeve 1.4305 locking pin 1.4034
- Stainless steel version, locking pin not hardened: threaded sleeve 1.4305 locking pin 1.4305

Surface finish:
- Steel version, locking pin hardened: black oxide finish, locking pin ground
- Stainless steel version, locking pin hardened: natural finish, locking pin ground
- Stainless steel version, locking pin not hardened: natural finish, locking pin ground

Sample order:
nlm 03092-02308

Note:
Locking Bolts are used to prevent any change in locking position due to lateral forces. A new locking position can only be set after the bolt has been disengaged. Special grips can be fitted on the projecting threaded pin.
This pin is also suitable for actuation of the locking bolt, for example automatically (programme-controlled) with the aid of a pneumatic cylinder or actuation by remote control with bowden cables.

On request:
Special versions and spacer rings.

example:

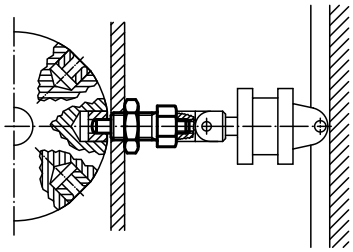

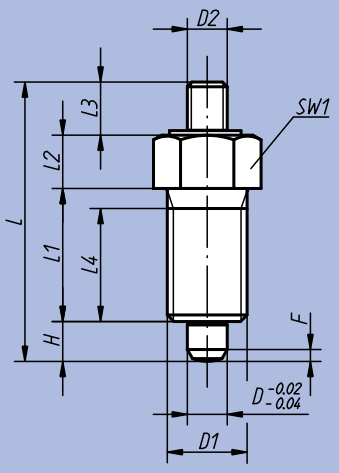

Form E
with threaded pin
without locking nut

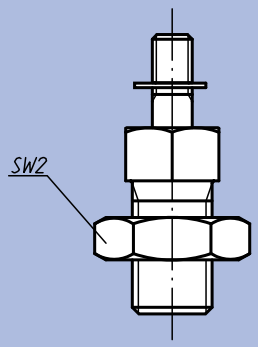

Form F
with threaded pin
with locking nut

Locking Bolts

Locking Bolts, in steel, locking pin hardened

Order No. Form E	Order No. Form F	D	D1	D2	L	L1	L2	L3	L4	H	SW1	SW2	F x 30°	Spring force initial pressure F1 approx. N	Spring force final pressure F2 approx. N
03092-1903	03092-2903	3	M6x0,75	M2	24	12	5	3,5	10	3,5	8	10	0,8	4,5	9
03092-1004	03092-2004	4	M8x1	M3	32	15	6	7	13	4	10	13	1	6	12
03092-1105	03092-2105	5	M10x1	M4	37	17	7	8	15	5	13	17	1,3	5	12
03092-1206	03092-2206	6	M12x1,5	M6	42	20	8	8	17	6	14	19	1,8	6	14
03092-1308	03092-2308	8	M16x1,5	M8	56	26	10	12	23	8	19	24	2,3	15	35
03092-1410	03092-2410	10	M20x1,5	M8	62	28	12	12	25	10	22	30	2,8	15	34
03092-1412	03092-2412	12	M20x1,5	M8	66	28	14	12	25	12	22	30	2,8	15	39
03092-1516	03092-2516	16	M24x2	M10	80	32	18	14	28	16	27	36	3,2	20	46

Locking Bolts, in stainless steel, locking pin hardened

Order No. Form E	Order No. Form F	D	D1	D2	L	L1	L2	L3	L4	H	SW1	SW2	F x 30°	Spring force initial pressure F1 approx. N	Spring force final pressure F2 approx. N
03092-01903	03092-02903	3	M6x0,75	M2	24	12	5	3,5	10	3,5	8	10	0,8	4,5	9
03092-01004	03092-02004	4	M8x1	M3	32	15	6	7	13	4	10	13	1	6	12
03092-01105	03092-02105	5	M10x1	M4	37	17	7	8	15	5	13	17	1,3	5	12
03092-01206	03092-02206	6	M12x1,5	M6	42	20	8	8	17	6	14	19	1,8	6	14
03092-01308	03092-02308	8	M16x1,5	M8	56	26	10	12	23	8	19	24	2,3	15	35
03092-01410	03092-02410	10	M20x1,5	M8	62	28	12	12	25	10	22	30	2,8	15	34
03092-01412	03092-02412	12	M20x1,5	M8	66	28	14	12	25	12	22	30	2,8	15	39
03092-01516	03092-02516	16	M24x2	M10	80	32	18	14	28	16	27	36	3,2	20	46

Locking Bolts, in stainless steel, locking pin not hardened

Order No. Form E	Order No. Form F	D	D1	D2	L	L1	L2	L3	L4	H	SW1	SW2	F x 30°	Spring force initial pressure F1 approx. N	Spring force final pressure F2 approx. N
03092-11903	03092-12903	3	M6x0,75	M2	24	12	5	3,5	10	3,5	8	10	0,8	4,5	9
03092-11004	03092-12004	4	M8x1	M3	32	15	6	7	13	4	10	13	1	6	12
03092-11105	03092-12105	5	M10x1	M4	37	17	7	8	15	5	13	17	1,3	5	12
03092-11206	03092-12206	6	M12x1,5	M6	42	20	8	8	17	6	14	19	1,8	6	14
03092-11308	03092-12308	8	M16x1,5	M8	56	26	10	12	23	8	19	24	2,3	15	35
03092-11410	03092-12410	10	M20x1,5	M8	62	28	12	12	25	10	22	30	2,8	15	34
03092-11412	03092-12412	12	M20x1,5	M8	66	28	14	12	25	12	22	30	2,8	15	39
03092-11516	03092-12516	16	M24x2	M10	80	32	18	14	28	16	27	36	3,2	20	46

Locking Bolts



Material:
- Steel version, locking pin hardened:
  quality class 5.8
- Stainless steel version, locking pin hardened:
  threaded sleeve 1.4305
  locking pin 1.4034
- Stainless steel version, locking pin not hardened:
  threaded sleeve 1.4305
  locking pin 1.4305

Key ring 1.4310, natural finish

Surface finish:
- Steel version, locking pin hardened:
  black oxide finish, locking pin ground
- Stainless steel version, locking pin hardened:
  natural finish, locking pin ground
- Stainless steel version, locking pin not hardened:
  natural finish, locking pin ground

Sample order:
nlm 03092-03308

Note:
Locking Bolts are used to prevent any change in locking position due to lateral forces. A new locking position can only be set after the bolt has been disengaged.The key ring is also suitable for actuation of the locking bolt, for example automatically (programme-controlled) with the aid of a pneumatic cylinder or actuation by remote control with bowden cables.

On request:
Special versions and spacer rings.

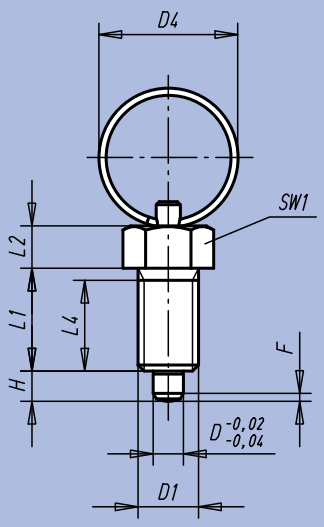

Form R
without locking nut

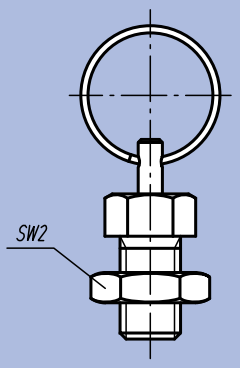

Form S
with locking nut

Locking Bolts

Locking Bolts, in steel, locking pin hardened

Order No. Form R	Order No. Form S	D	D1	D4	L1	L2	L4	H	SW1	SW2	F x 30°	Spring force initial pressure F1 approx. N	Spring force final pressure F2 approx. N
03092-3004	03092-4004	4	M8x1	15	15	6	13	4	10	13	1	6	12
03092-3105	03092-4105	5	M10x1	23	17	7	15	5	13	17	1,3	5	12
03092-3206	03092-4206	6	M12x1,5	23	20	8	17	6	14	19	1,8	6	14
03092-3308	03092-4308	8	M16x1,5	28	26	10	23	8	19	24	2,3	15	35
03092-3410	03092-4410	10	M20x1,5	28	28	12	25	10	22	30	2,8	15	34

Locking Bolts, in stainless steel, locking pin hardened

Order No. Form R	Order No. Form S	D	D1	D4	L1	L2	L4	H	SW1	SW2	F x 30°	Spring force initial pressure F1 approx. N	Spring force final pressure F2 approx. N
03092-03004	03092-04004	4	M8x1	15	15	6	13	4	10	13	1	6	12
03092-03105	03092-04105	5	M10x1	23	17	7	15	5	13	17	1,3	5	12
03092-03206	03092-04206	6	M12x1,5	23	20	8	17	6	14	19	1,8	6	14
03092-03308	03092-04308	8	M16x1,5	28	26	10	23	8	19	24	2,3	15	35
03092-03410	03092-04410	10	M20x1,5	28	28	12	25	10	22	30	2,8	15	34

Locking Bolts, in stainless steel, locking pin not hardened

Order No. Form R	Order No. Form S	D	D1	D4	L1	L2	L4	H	SW1	SW2	F x 30°	Spring force initial pressure F1 approx. N	Spring force final pressure F2 approx. N
03092-13004	03092-14004	4	M8x1	15	15	6	13	4	10	13	1	6	12
03092-13105	03092-14105	5	M10x1	23	17	7	15	5	13	17	1,3	5	12
03092-13206	03092-14206	6	M12x1,5	23	20	8	17	6	14	19	1,8	6	14
03092-13308	03092-14308	8	M16x1,5	28	26	10	23	8	19	24	2,3	15	35
03092-13410	03092-14410	10	M20x1,5	28	28	12	25	10	22	30	2,8	15	34

Locking Bolts

without collar



Material:
- Steel version, locking pin hardened: quality class 5.8
- Stainless steel version, locking pin hardened: threaded sleeve 1.4305 locking pin 1.4034
- Stainless steel version, locking pin not hardened: threaded sleeve 1.4305 locking pin 1.4305

Mushroom knob in anthracite grey thermoplastic

Surface finish:
- Steel version, locking pin hardened: black oxide finish, locking pin ground
- Stainless steel version, locking pin hardened: natural finish, locking pin ground
- Stainless steel version, locking pin not hardened: natural finish, locking pin ground

Sample order:
nlm 03093-02206

Note:
Locking Bolts are used to prevent any change in locking position due to lateral forces. A new locking position can only be set after the bolt has been manually disengaged.
In order to screw in the locking bolts, a screw-in washer can be supplied. The washer is slid beneath the disengaged mushroom knob so that the follower pins engage in the slot.

On request:
Special versions.

Form G
without locking nut

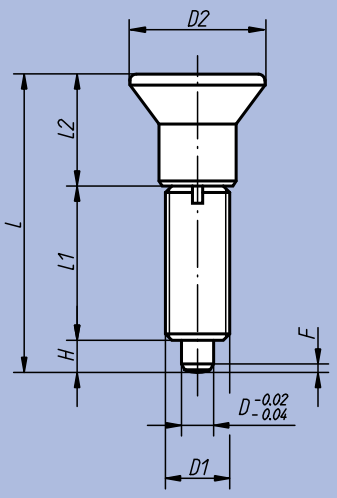

Form H
with locking nut

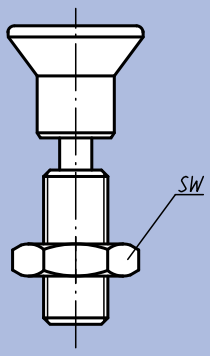

Locking Bolt
with screw-in washer

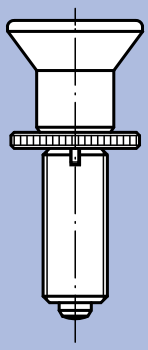

screw-in washer

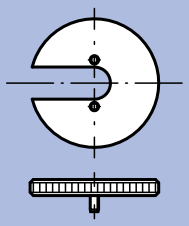

Locking Bolts

without collar

Locking Bolts without collar, in steel, locking pin hardened

Order No. Form G	Order No. Form H	D	D1	D2	L	L1	L2	H	SW	F x 30°	Spring force initial pressure F1 approx. N	Spring force final pressure F2 approx. N	Order No. screw-in washer
03093-1903	03093-2903	3	M6x0,75	14	31,5	17	11	3,5	10	0,8	4,5	11	03094-99
03093-1004	03093-2004	4	M8x1	18	38,5	21	13,5	4	13	1,3	6	12	03094-90
03093-1105	03093-2105	5	M10x1	21	43,5	24	14,5	5	17	1,3	5	12	03094-91
03093-1206	03093-2206	6	M12x1,5	25	51,7	28	17,7	6	19	1,8	6	14	03094-92
03093-1308	03093-2308	8	M16x1,5	33	68	36	24	8	24	2,3	15	35	03094-93
03093-1410	03093-2410	10	M20x1,5	33	74	40	24	10	30	2,8	15	34	03094-94
03093-1412	03093-2412	12	M20x1,5	33	78	42	24	12	30	2,8	15	39	03094-94
03093-1516	03093-2516	16	M24x2	40	96	50	30	16	36	3,2	20	46	03094-95

Locking Bolts without collar, in stainless steel, locking pin hardened

Order No. Form G	Order No. Form H	D	D1	D2	L	L1	L2	H	SW	F x 30°	Spring force initial pressure F1 approx. N	Spring force final pressure F2 approx. N	Order No. screw-in washer
03093-01903	03093-02903	3	M6x0,75	14	31,5	17	11	3,5	10	0,8	4,5	11	03094-99
03093-01004	03093-02004	4	M8x1	18	38,5	21	13,5	4	13	1,3	6	12	03094-90
03093-01105	03093-02105	5	M10x1	21	43,5	24	14,5	5	17	1,3	5	12	03094-91
03093-01206	03093-02206	6	M12x1,5	25	51,7	28	17,7	6	19	1,8	6	14	03094-92
03093-01308	03093-02308	8	M16x1,5	33	68	36	24	8	24	2,3	15	35	03094-93
03093-01410	03093-02410	10	M20x1,5	33	74	40	24	10	30	2,8	15	34	03094-94
03093-01412	03093-02412	12	M20x1,5	33	78	42	24	12	30	2,8	15	39	03094-94
03093-01516	03093-02516	16	M24x2	40	96	50	30	16	36	3,2	20	46	03094-95

Locking Bolts without collar, in stainless steel, locking pin not hardened

Order No. Form G	Order No. Form H	D	D1	D2	L	L1	L2	H	SW	F x 30°	Spring force initial pressure F1 approx. N	Spring force final pressure F2 approx. N	Order No. screw-in washer
03093-11903	03093-12903	3	M6x0,75	14	31,5	17	11	3,5	10	0,8	4,5	11	03094-99
03093-11004	03093-12004	4	M8x1	18	38,5	21	13,5	4	13	1,3	6	12	03094-90
03093-11105	03093-12105	5	M10x1	21	43,5	24	14,5	5	17	1,3	5	12	03094-91
03093-11206	03093-12206	6	M12x1,5	25	51,7	28	17,7	6	19	1,8	6	14	03094-92
03093-11308	03093-12308	8	M16x1,5	33	68	36	24	8	24	2,3	15	35	03094-93
03093-11410	03093-12410	10	M20x1,5	33	74	40	24	10	30	2,8	15	34	03094-94
03093-11412	03093-12412	12	M20x1,5	33	78	42	24	12	30	2,8	15	39	03094-94
03093-11516	03093-12516	16	M24x2	40	96	50	30	16	36	3,2	20	46	03094-95

Locking Bolts

without collar with extended locking pin



Material:
- Steel version, locking pin hardened: quality class 5.8
- Stainless steel version, locking pin hardened: threaded sleeve 1.4305 locking pin 1.4034
- Stainless steel version, locking pin not hardened: threaded sleeve 1.4305 locking pin 1.4305

Mushroom knob in anthracite grey thermoplastic

Surface finish:
- Steel version, locking pin hardened: black oxide finish, locking pin ground
- Stainless steel version, locking pin hardened: natural finish, locking pin ground
- Stainless steel version, locking pin not hardened: natural finish, locking pin ground

Sample order:
nlm 03093-21004

Note:
Locking Bolts are used to prevent any change in locking position due to lateral forces. A new locking position can only be set after the bolt has been manually disengaged.
In order to screw in the locking bolts, a screw-in washer can be supplied. The washer is slid beneath the disengaged mushroom knob so that the follower pins engage in the slot.

On request:
Special versions.

Form G
without locking nut

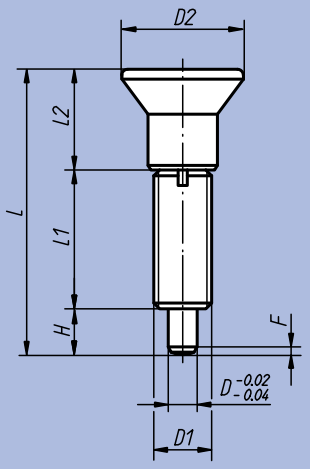

Form H
with locking nut

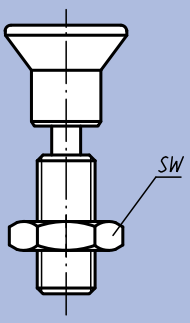

Locking Bolt
with screw-in washer

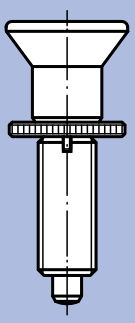

screw-in washer

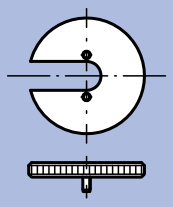

Locking Bolts

without collar with extended locking pin

Locking Bolts without collar with extended locking pin, in steel, locking pin hardened

Order No. Form G	Order No. Form H	D	D1	D2	L	L1	L2	H	SW	F x 30°	Spring force initial pressure F1 approx. N	Spring force final pressure F2 approx. N	Order No. screw-in washer
03093-21903	03093-22903	3	M6x0,75	14	33	17	11	5	10	0,8	4,5	11	03094-99
03093-21004	03093-22004	4	M8x1	18	40,5	21	13,5	6	13	1	6	15	03094-90
03093-21105	03093-22105	5	M10x1	21	46,5	24	14,5	8	17	1,3	5	16	03094-91
03093-21206	03093-22206	6	M12x1,5	25	54,7	28	17,7	9	19	1,8	6	18	03094-92
03093-21308	03093-22308	8	M16x1,5	33	72	36	24	12	24	2,3	15	45	03094-93
03093-21410	03093-22410	10	M20x1,5	33	79	40	24	15	30	2,8	15	43	03094-94
03093-21412	03093-22412	12	M20x1,5	33	84	42	24	18	30	2,8	15	51	03094-94
03093-21516	03093-22516	16	M24x2	40	104	50	30	24	36	3,2	20	60	03094-95

Locking Bolts without collar with extended locking pin, in stainless steel, locking pin hardened

Order No. Form G	Order No. Form H	D	D1	D2	L	L1	L2	H	SW	F x 30°	Spring force initial pressure F1 approx. N	Spring force final pressure F2 approx. N	Order No. screw-in washer
03093-201903	03093-202903	3	M6x0,75	14	33	17	11	5	10	0,8	4,5	11	03094-99
03093-201004	03093-202004	4	M8x1	18	40,5	21	13,5	6	13	1	6	15	03094-90
03093-201105	03093-202105	5	M10x1	21	46,5	24	14,5	8	17	1,3	5	16	03094-91
03093-201206	03093-202206	6	M12x1,5	25	54,7	28	17,7	9	19	1,8	6	18	03094-92
03093-201308	03093-202308	8	M16x1,5	33	72	36	24	12	24	2,3	15	45	03094-93
03093-201410	03093-202410	10	M20x1,5	33	79	40	24	15	30	2,8	15	43	03094-94
03093-201412	03093-202412	12	M20x1,5	33	84	42	24	18	30	2,8	15	51	03094-94
03093-201516	03093-202516	16	M24x2	40	104	50	30	24	36	3,2	20	60	03094-95

Locking Bolts without collar with extended locking pin, in stainless steel, locking pin not hardened

Order No. Form G	Order No. Form H	D	D1	D2	L	L1	L2	H	SW	F x 30°	Spring force initial pressure F1 approx. N	Spring force final pressure F2 approx. N	Order No. screw-in washer
03093-211903	03093-212903	3	M6x0,75	14	33	17	11	5	10	0,8	4,5	11	03094-99
03093-211004	03093-212004	4	M8x1	18	40,5	21	13,5	6	13	1	6	15	03094-90
03093-211105	03093-212105	5	M10x1	21	46,5	24	14,5	8	17	1,3	5	16	03094-91
03093-211206	03093-212206	6	M12x1,5	25	54,7	28	17,7	9	19	1,8	6	18	03094-92
03093-211308	03093-212308	8	M16x1,5	33	72	36	24	12	24	2,3	15	45	03094-93
03093-211410	03093-212410	10	M20x1,5	33	79	40	24	15	30	2,8	15	43	03094-94
03093-211412	03093-212412	12	M20x1,5	33	84	42	24	18	30	2,8	15	51	03094-94
03093-211516	03093-212516	16	M24x2	40	104	50	30	24	36	3,2	20	60	03094-95

Notes:

Locking Bolts

in stainless steel, without collar



Material:
- Locking pin hardened:
  threaded sleeve 1.4305
  locking pin 1.4034
- Locking pin not hardened:
  threaded sleeve 1.4305
  locking pin 1.4305

Mushroom knob 1.4305,
electrolytic-polish

Surface finish:
Natural finish; locking pin ground

Sample order:
nlm 03093-001004

Note:
Locking Bolts are used to prevent any change in locking position due to lateral forces. A new locking position can only be set after the bolt has been manually disengaged.
In order to screw in the locking bolts, a screw-in washer can be supplied. The washer is slid beneath the disengaged mushroom knob so that the follower pins engage in the slot.

On request:
Special versions.

Form G
without locking nut

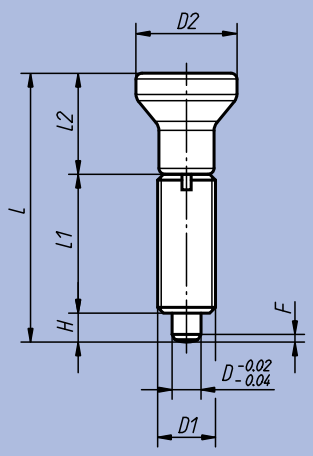

Form H
with locking nut

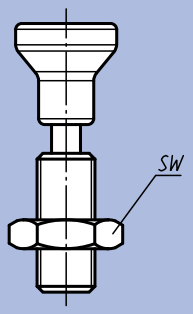

Locking Bolt
with screw-in washer

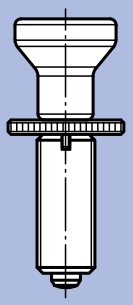

screw-in washer

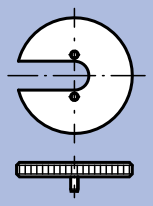

Locking Bolts in stainless steel, without collar, locking pin hardened

Order No. Form G	Order No. Form H	D	D1	D2	L	L1	L2	H	SW	F x 30°	Spring force initial pressure F1 approx. N	Spring force final pressure F2 approx. N	Order No. screw-in washer
03093-001903	03093-002903	3	M6x0,75	14	34,5	17	14	3,5	10	0,8	4,5	9	03094-99
03093-001004	03093-002004	4	M8x1	18	43	21	18	4	13	1	6	12	03094-90
03093-001105	03093-002105	5	M10x1	21	50	24	21	5	17	1,3	5	12	03094-91
03093-001206	03093-002206	6	M12x1,5	25	59	28	25	6	19	1,8	6	14	03094-92
03093-001308	03093-002308	8	M16x1,5	33	77	36	33	8	24	2,3	15	35	03094-93
03093-001410	03093-002410	10	M20x1,5	33	83	40	33	10	30	2,8	15	34	03094-94
03093-001412	03093-002412	12	M20x1,5	33	87	42	33	12	30	2,8	15	39	03094-94
03093-001516	03093-002516	16	M24x2	40	106	50	40	16	36	3,2	20	46	03094-95

Locking Bolts in stainless steel, without collar, locking pin not hardened

Order No. Form G	Order No. Form H	D	D1	D2	L	L1	L2	H	SW	F x 30°	Spring force initial pressure F1 approx. N	Spring force final pressure F2 approx. N	Order No. screw-in washer
03093-111903	03093-112903	3	M6x0,75	14	34,5	17	14	3,5	10	0,8	4,5	9	03094-99
03093-111004	03093-112004	4	M8x1	18	43	21	18	4	13	1	6	12	03094-90
03093-111105	03093-112105	5	M10x1	21	50	24	21	5	17	1,3	5	12	03094-91
03093-111206	03093-112206	6	M12x1,5	25	59	28	25	6	19	1,8	6	14	03094-92
03093-111308	03093-112308	8	M16x1,5	33	77	36	33	8	24	2,3	15	35	03094-93
03093-111410	03093-112410	10	M20x1,5	33	83	40	33	10	30	2,8	15	34	03094-94
03093-111412	03093-112412	12	M20x1,5	33	87	42	33	12	30	2,8	15	39	03094-94
03093-111516	03093-112516	16	M24x2	40	106	50	40	16	36	3,2	20	46	03094-95

Locking Bolts

without collar



Material:
- Steel version, locking pin hardened: quality class 5.8
- Stainless steel version, locking pin hardened:
  threaded sleeve 1.4305
  locking pin 1.4034
- Stainless steel version, locking pin not hardened:
  threaded sleeve 1.4305
  locking pin 1.4305

Mushroom knob in anthracite grey thermoplastic

Surface finish:
- Steel version, locking pin hardened: black oxide finish, locking pin ground
- Stainless steel version, locking pin hardened:
  natural finish, locking pin ground
- Stainless steel version, locking pin not hardened:
  natural finish, locking pin ground

Sample order:
nlm 03094-02206

Note:
Locking Bolts are used to prevent any change in locking position due to lateral forces. A new locking position can only be set after the bolt has been manually disengaged.
In order to screw in the locking bolts, a screw-in washer can be supplied. The washer is slid beneath the disengaged mushroom knob so that the follower pins engage in the slot.

On request:
Special versions.

Form G
without locking nut

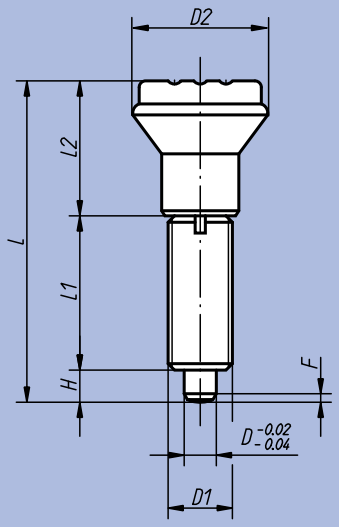

Form H
with locking nut

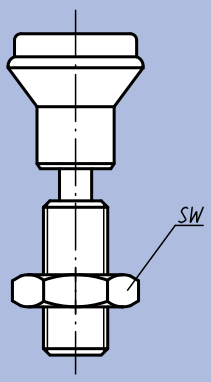

Locking Bolt
with screw-in washer

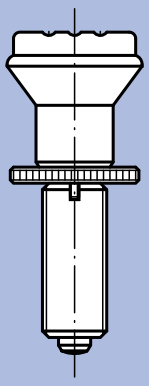

screw-in washer

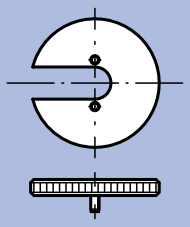

Locking Bolts

without collar

Locking Bolts without collar, in steel, locking pin hardened

Order No. Form G	Order No. Form H	D	D1	D2	L	L1	L2	H	SW	F x 30°	Spring force initial pressure F1 approx. N	Spring force final pressure F2 approx. N	Order No. screw-in washer
03094-1105	03094-2105	5	M10x1	21	47	24	18	5	17	1,3	5	12	03094-91
03094-1206	03094-2206	6	M12x1,5	25	56	28	22	6	19	1,8	6	14	03094-92
03094-1308	03094-2308	8	M16x1,5	33	74	36	30	8	24	2,3	15	35	03094-93
03094-1410	03094-2410	10	M20x1,5	33	80	40	30	10	30	2,8	15	34	03094-94

Locking Bolts without collar, in stainless steel, locking pin hardened

Order No. Form G	Order No. Form H	D	D1	D2	L	L1	L2	H	SW	F x 30°	Spring force initial pressure F1 approx. N	Spring force final pressure F2 approx. N	Order No. screw-in washer
03094-01105	03094-02105	5	M10x1	21	47	24	18	5	17	1,3	5	12	03094-91
03094-01206	03094-02206	6	M12x1,5	25	56	28	22	6	19	1,8	6	14	03094-92
03094-01308	03094-02308	8	M16x1,5	33	74	36	30	8	24	2,3	15	35	03094-93
03094-01410	03094-02410	10	M20x1,5	33	80	40	30	10	30	2,8	15	34	03094-94

Locking Bolts without collar, in stainless steel, locking pin not hardened

Order No. Form G	Order No. Form H	D	D1	D2	L	L1	L2	H	SW	F x 30°	Spring force initial pressure F1 approx. N	Spring force final pressure F2 approx. N	Order No. screw-in washer
03094-11105	03094-12105	5	M10x1	21	47	24	18	5	17	1,3	5	12	03094-91
03094-11206	03094-12206	6	M12x1,5	25	56	28	22	6	19	1,8	6	14	03094-92
03094-11308	03094-12308	8	M16x1,5	33	74	36	30	8	24	2,3	15	35	03094-93
03094-11410	03094-12410	10	M20x1,5	33	80	40	30	10	30	2,8	15	34	03094-94

Locking Bolts

without collar



Material:
- Steel version, locking pin hardened: quality class 5.8
- Stainless steel version, locking pin hardened:
  threaded sleeve 1.4305
  locking pin 1.4034
- Stainless steel version, locking pin not hardened:
  threaded sleeve 1.4305
  locking pin 1.4305

Surface finish:
- Steel version, locking pin hardened: black oxide finish, locking pin ground
- Stainless steel version, locking pin hardened:
  natural finish, locking pin ground
- Stainless steel version, locking pin not hardened:
  natural finish, locking pin ground

Sample order:
nlm 03096-01206

Note:
Locking Bolts are used to prevent any change in locking position due to lateral forces. A new locking position can only be set after the bolt has been disengaged.
Special grips can be fitted on the projecting threaded pin. This pin is also suitable for actuation of the locking bolt, for example automatically (programme-controlled) with the aid of a pneumatic cylinder or actuation by remote control with bowden cables.
In order to screw in the locking bolts, a screw-in washer can be supplied. The washer is put on the threaded sleeve so that the follower pins engage in the slot.

On request:
Special versions.

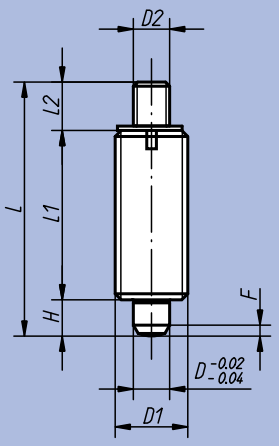

Form J
with threaded pin
without locking nut

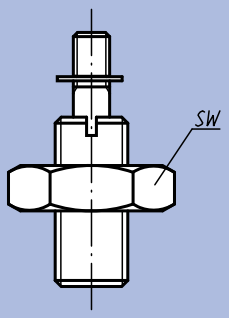

Form K
with threaded pin
with locking nut

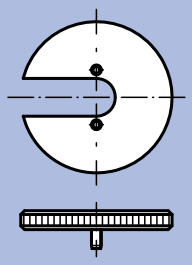

screw-in washer

Locking Bolts

without collar

Locking Bolts without collar, in steel, locking pin hardened

Order No. Form J	Order No. Form K	D	D1	D2	L	L1	L2	H	SW	F x 30°	Spring force initial pressure F1 approx. N	Spring force final pressure F2 approx. N	Order No. screw-in washer
03096-1903	03096-2903	3	M6x0,75	M2	24	17	3,5	3,5	10	0,8	4,5	9	03094-99
03096-1004	03096-2004	4	M8x1	M3	32	21	7	4	13	1	6	12	03094-90
03096-1105	03096-2105	5	M10x1	M4	37	24	8	5	17	1,3	5	12	03094-91
03096-1206	03096-2206	6	M12x1,5	M6	42	28	8	6	19	1,8	6	14	03094-92
03096-1308	03096-2308	8	M16x1,5	M8	56	36	12	8	24	2,3	15	35	03094-93
03096-1410	03096-2410	10	M20x1,5	M8	62	40	12	10	30	2,8	15	34	03094-94
03096-1412	03096-2412	12	M20x1,5	M8	66	42	12	12	30	2,8	15	39	03094-94
03096-1516	03096-2516	16	M24x2	M10	80	50	14	16	36	3,2	20	46	03094-95

Locking Bolts without collar, in stainless steel, locking pin hardened

Order No. Form J	Order No. Form K	D	D1	D2	L	L1	L2	H	SW	F x 30°	Spring force initial pressure F1 approx. N	Spring force final pressure F2 approx. N	Order No. screw-in washer
03096-01903	03096-02903	3	M6x0,75	M2	24	17	3,5	3,5	10	0,8	4,5	9	03094-99
03096-01004	03096-02004	4	M8x1	M3	32	21	7	4	13	1	6	12	03094-90
03096-01105	03096-02105	5	M10x1	M4	37	24	8	5	17	1,3	5	12	03094-91
03096-01206	03096-02206	6	M12x1,5	M6	42	28	8	6	19	1,8	6	14	03094-92
03096-01308	03096-02308	8	M16x1,5	M8	56	36	12	8	24	2,3	15	35	03094-93
03096-01410	03096-02410	10	M20x1,5	M8	62	40	12	10	30	2,8	15	34	03094-94
03096-01412	03096-02412	12	M20x1,5	M8	66	42	12	12	30	2,8	15	39	03094-94
03096-01516	03096-02516	16	M24x2	M10	80	50	14	16	36	3,2	20	46	03094-95

Locking Bolts without collar, in stainless steel, locking pin not hardened

Order No. Form J	Order No. Form K	D	D1	D2	L	L1	L2	H	SW	F x 30°	Spring force initial pressure F1 approx. N	Spring force final pressure F2 approx. N	Order No. screw-in washer
03096-11903	03096-12903	3	M6x0,75	M2	24	17	3,5	3,5	10	0,8	4,5	9	03094-99
03096-11004	03096-12004	4	M8x1	M3	32	21	7	4	13	1	6	12	03094-90
03096-11105	03096-12105	5	M10x1	M4	37	24	8	5	17	1,3	5	12	03094-91
03096-11206	03096-12206	6	M12x1,5	M6	42	28	8	6	19	1,8	6	14	03094-92
03096-11308	03096-12308	8	M16x1,5	M8	56	36	12	8	24	2,3	15	35	03094-93
03096-11410	03096-12410	10	M20x1,5	M8	62	40	12	10	30	2,8	15	34	03094-94
03096-11412	03096-12412	12	M20x1,5	M8	66	42	12	12	30	2,8	15	39	03094-94
03096-11516	03096-12516	16	M24x2	M10	80	50	14	16	36	3,2	20	46	03094-95

Locking Bolts

without collar



Material:
- Steel version, locking pin hardened:
  quality class 5.8
- Stainless steel version, locking pin hardened:
  threaded sleeve 1.4305
  locking pin 1.4034
- Stainless steel version, locking pin not hardened:
  threaded sleeve 1.4305
  locking pin 1.4305

Key ring 1.4310, natural finish

Surface finish:
- Steel version, locking pin hardened:
  black oxide finish, locking pin ground
- Stainless steel version, locking pin hardened:
  natural finish, locking pin ground
- Stainless steel version, locking pin not hardened:
  natural finish, locking pin ground

Sample order:
nlm 03096-03206

Note:
Locking Bolts are used to prevent any change in locking position due to lateral forces. A new locking position can only be set after the bolt has been disengaged.
The key ring is also suitable for actuation of the locking bolt, for example automatically (programme-controlled) with the aid of a pneumatic cylinder or actuation by remote control with bowden cables.
In order to screw in the locking bolts, a screw-in washer can be supplied. The washer is put on the threaded sleeve so that the follower pins engage in the slot.

On request:
Special versions.

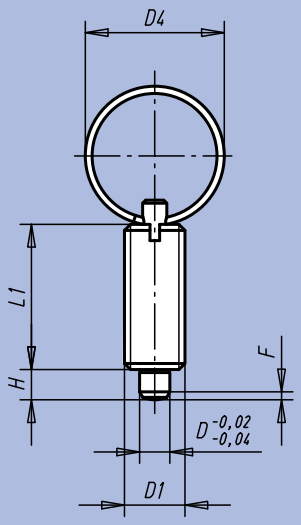

Form T
without locking nut

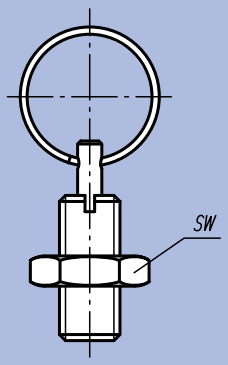

Form U
with locking nut

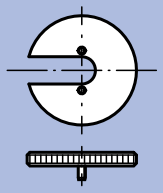

screw-in washer

Locking Bolts

without collar

Locking Bolts without collar, in steel, locking pin hardened

Order No. Form T	Order No. Form U	D	D1	D4	L1	H	SW	F x 30°	Spring force initial pressure F1 approx. N	Spring force final pressure F2 approx. N	Order No. screw-in washer
03096-3004	03096-4004	4	M8x1	15	21	4	13	1	6	12	03094-90
03096-3105	03096-4105	5	M10x1	23	24	5	17	1,3	5	12	03094-91
03096-3206	03096-4206	6	M12x1,5	23	28	6	19	1,8	6	14	03094-92
03096-3308	03096-4308	8	M16x1,5	28	36	8	24	2,3	15	35	03094-93
03096-3410	03096-4410	10	M20x1,5	28	40	10	30	2,8	15	34	03094-94

Locking Bolts without collar, in stainless steel, locking pin hardened

Order No. Form T	Order No. Form U	D	D1	D4	L1	H	SW	F x 30°	Spring force initial pressure F1 approx. N	Spring force final pressure F2 approx. N	Order No. screw-in washer
03096-03004	03096-04004	4	M8x1	15	21	4	13	1	6	12	03094-90
03096-03105	03096-04105	5	M10x1	23	24	5	17	1,3	5	12	03094-91
03096-03206	03096-04206	6	M12x1,5	23	28	6	19	1,8	6	14	03094-92
03096-03308	03096-04308	8	M16x1,5	28	36	8	24	2,3	15	35	03094-93
03096-03410	03096-04410	10	M20x1,5	28	40	10	30	2,8	15	34	03094-94

Locking Bolts without collar, in stainless steel, locking pin not hardened

Order No. Form T	Order No. Form U	D	D1	D4	L1	H	SW	F x 30°	Spring force initial pressure F1 approx. N	Spring force final pressure F2 approx. N	Order No. screw-in washer
03096-13004	03096-14004	4	M8x1	15	21	4	13	1	6	12	03094-90
03096-13105	03096-14105	5	M10x1	23	24	5	17	1,3	5	12	03094-91
03096-13206	03096-14206	6	M12x1,5	23	28	6	19	1,8	6	14	03094-92
03096-13308	03096-14308	8	M16x1,5	28	36	8	24	2,3	15	35	03094-93
03096-13410	03096-14410	10	M20x1,5	28	40	10	30	2,8	15	34	03094-94

Locking Bolts

without collar



Material:
- Steel version, locking pin hardened:
  sleeve 1.0403 weldable,
  locking pin quality class 5.8
- Stainless steel version, locking pin hardened:
  sleeve 1.4301 weldable,
  locking pin 1.4034
- Stainless steel version, locking pin not hardened:
  sleeve 1.4301 weldable,
  locking pin 1.4305

Mushroom knob in anthracite grey thermoplastic

Surface finish:
- Steel version, locking pin hardened:
  black oxide finish, locking pin ground
- Stainless steel version, locking pin hardened:
  natural finish, locking pin ground
- Stainless steel version, locking pin not hardened:
  natural finish, locking pin ground

Sample order:
nlm 03097-01206

Note:
Locking Bolts are used to prevent any change in locking position due to lateral forces. A new locking position can only be set after the bolt has been manually disengaged.
Form M is recommended for applications in which gradual disengagement of the locking bolt is desired, without any relocking of the pin.
In order to weld the locking bolts to another surface, we recommend inert gas-shielded welding with MIG welding equipment.

On request:
Special versions.

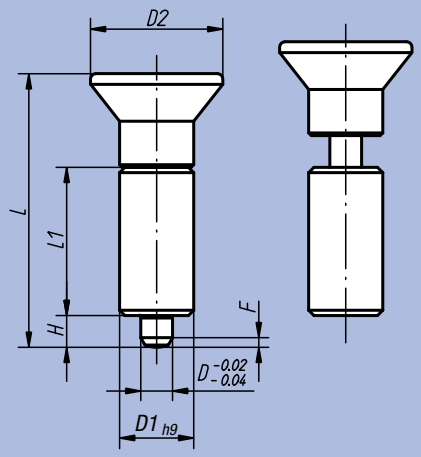

Form L
without locking slot

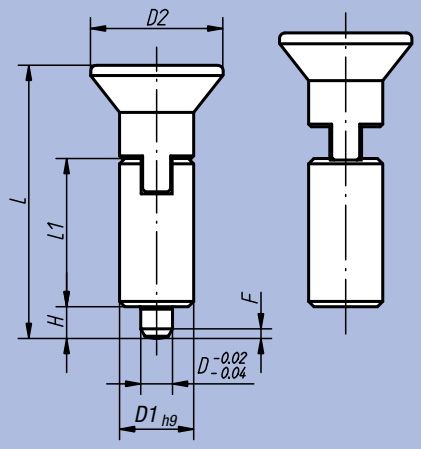

Form M
with locking slot

Locking Bolts

without collar

Locking Bolts without collar, in steel, locking pin hardened

Order No. Form L	Order No. Form M	D	D1	D2	L	L1	H	F x 30°	Spring force initial pressure F1 approx. N	Spring force final pressure F2 approx. N
03097-1004	03097-2004	4	10	18	38,5	21	4	1	6	12
03097-1105	03097-2105	5	12	21	43,5	24	5	1,3	5	12
03097-1206	03097-2206	6	14	25	51,7	28	6	1,8	6	14
03097-1308	03097-2308	8	18	33	68	36	8	2,3	15	35
03097-1410	03097-2410	10	22	33	74	40	10	2,8	15	34

Locking Bolts without collar, in stainless steel, locking pin hardened

Order No. Form L	Order No. Form M	D	D1	D2	L	L1	H	F x 30°	Spring force initial pressure F1 approx. N	Spring force final pressure F2 approx. N
03097-01004	03097-02004	4	10	18	38,5	21	4	1	6	12
03097-01105	03097-02105	5	12	21	43,5	24	5	1,3	5	12
03097-01206	03097-02206	6	14	25	51,7	28	6	1,8	6	14
03097-01308	03097-02308	8	18	33	68	36	8	2,3	15	35
03097-01410	03097-02410	10	22	33	74	40	10	2,8	15	34

Locking Bolts without collar, in stainless steel, locking pin not hardened

Order No. Form L	Order No. Form M	D	D1	D2	L	L1	H	F x 30°	Spring force initial pressure F1 approx. N	Spring force final pressure F2 approx. N
03097-11004	03097-12004	4	10	18	38,5	21	4	1	6	12
03097-11105	03097-12105	5	12	21	43,5	24	5	1,3	5	12
03097-11206	03097-12206	6	14	25	51,7	28	6	1,8	6	14
03097-11308	03097-12308	8	18	33	68	36	8	2,3	15	35
03097-11410	03097-12410	10	22	33	74	40	10	2,8	15	34

Locking Bolts

without collar



Material:
- Steel version, locking pin hardened:
  sleeve 1.0403 weldable,
  locking pin quality class 5.8
- Stainless steel version, locking pin hardened:
  sleeve 1.4301 weldable,
  locking pin 1.4034
- Stainless steel version, locking pin not hardened:
  sleeve 1.4301 weldable,
  locking pin 1.4305

Mushroom knob in anthracite grey thermoplastic

Surface finish:
- Steel version, locking pin hardened:
  black oxide finish, locking pin ground
- Stainless steel version, locking pin hardened:
  natural finish, locking pin ground
- Stainless steel version, locking pin not hardened:
  natural finish, locking pin ground

Sample order:
nlm 03098-02206

Note:
Locking Bolts are used to prevent any change in locking position due to lateral forces. A new locking position can only be set after the bolt has been manually disengaged.
Form M is recommended for applications in which gradual disengagement of the locking bolt is desired, without any relocking of the pin.
Special grips can be fitted on the projecting threaded pin of form N. This pin is also suitable for actuation of the locking bolt, for example automatically (programme-controlled) with the aid of a pneumatic cylinder or actuation by remote control with bowden cables.
In order to weld the locking bolts to another surface, we recommend inert gas-shielded welding with MIG welding equipment.

On request:
Special versions.

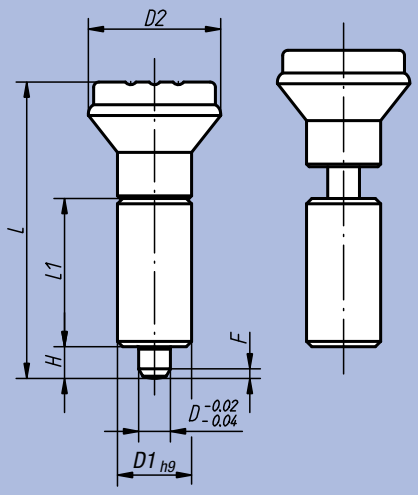

Form L
without locking slot

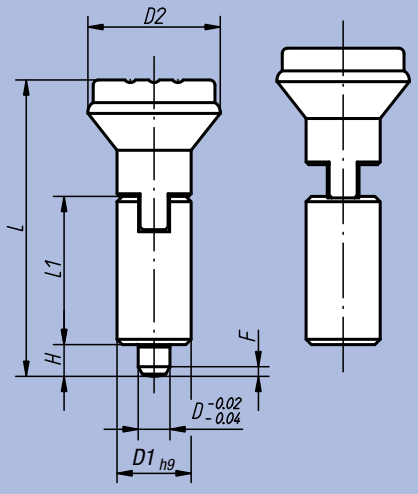

Form M
with locking slot

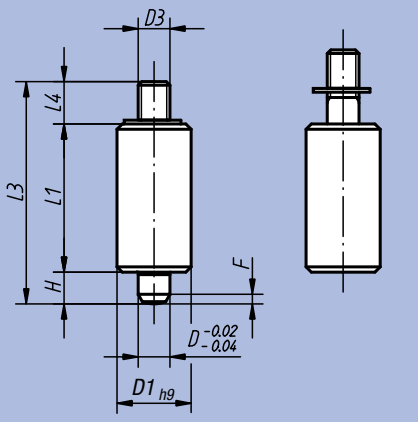

Form N
with threaded pin

Locking Bolts

without collar

Locking Bolts without collar, in steel, locking pin hardened

Order No. Form L	Order No. Form M	Order No. Form N	D	D1	D2	D3	L	L1	L3	L4	H	F x 30°	Spring force initial pressure F1 approx. N	Spring force final pressure F2 approx. N
03098-1105	03098-2105	03098-3105	5	12	21	M4	47	24	37	8	5	1,3	5	12
03098-1206	03098-2206	03098-3206	6	14	25	M6	56	28	43	9	6	1,8	6	14
03098-1308	03098-2308	03098-3308	8	18	33	M8	74	36	56	12	8	2,3	15	35
03098-1410	03098-2410	03098-3410	10	22	33	M8	80	40	62	12	10	2,8	15	34

Locking Bolts without collar, in stainless steel, locking pin hardened

Order No. Form L	Order No. Form M	Order No. Form N	D	D1	D2	D3	L	L1	L3	L4	H	F x 30°	Spring force initial pressure F1 approx. N	Spring force final pressure F2 approx. N
03098-01105	03098-02105	03098-03105	5	12	21	M4	47	24	37	8	5	1,3	5	12
03098-01206	03098-02206	03098-03206	6	14	25	M6	56	28	43	9	6	1,8	6	14
03098-01308	03098-02308	03098-03308	8	18	33	M8	74	36	56	12	8	2,3	15	35
03098-01410	03098-02410	03098-03410	10	22	33	M8	80	40	62	12	10	2,8	15	34

Locking Bolts without collar, in stainless steel, locking pin not hardened

Order No. Form L	Order No. Form M	Order No. Form N	D	D1	D2	D3	L	L1	L3	L4	H	F x 30°	Spring force initial pressure F1 approx. N	Spring force final pressure F2 approx. N
03098-11105	03098-12105	03098-13105	5	12	21	M4	47	24	37	8	5	1,3	5	12
03098-11206	03098-12206	03098-13206	6	14	25	M6	56	28	43	9	6	1,8	6	14
03098-11308	03098-12308	03098-13308	8	18	33	M8	74	36	56	12	8	2,3	15	35
03098-11410	03098-12410	03098-13410	10	22	33	M8	80	40	62	12	10	2,8	15	34

Locking Bolts

without collar



Material:
- Steel version, locking pin hardened:
  sleeve 1.0403 weldable,
  locking pin quality class 5.8
- Stainless steel version, locking pin hardened:
  sleeve 1.4301 weldable,
  locking pin 1.4034
- Stainless steel version, locking pin not hardened:
  sleeve 1.4301 weldable,
  locking pin 1.4305

Key ring 1.4310, natural finish

Surface finish:
- Steel version, locking pin hardened:
  black oxide finish, locking pin ground
- Stainless steel version, locking pin hardened:
  natural finish, locking pin ground
- Stainless steel version, locking pin not hardened:
  natural finish, locking pin ground

Sample order:
nlm 03098-4206

Note:
Locking Bolts are used to prevent any change in locking position due to lateral forces. A new locking position can only be set after the bolt has been disengaged.
The key ring is also suitable for actuation of the locking bolt, for example automatically (programme-controlled) with the aid of a pneumatic cylinder or actuation by remote control with bowden cables.
In order to weld the locking bolts to another surface, we recommend inert gas-shielded welding with MIG welding equipment.

On request:
Special versions.

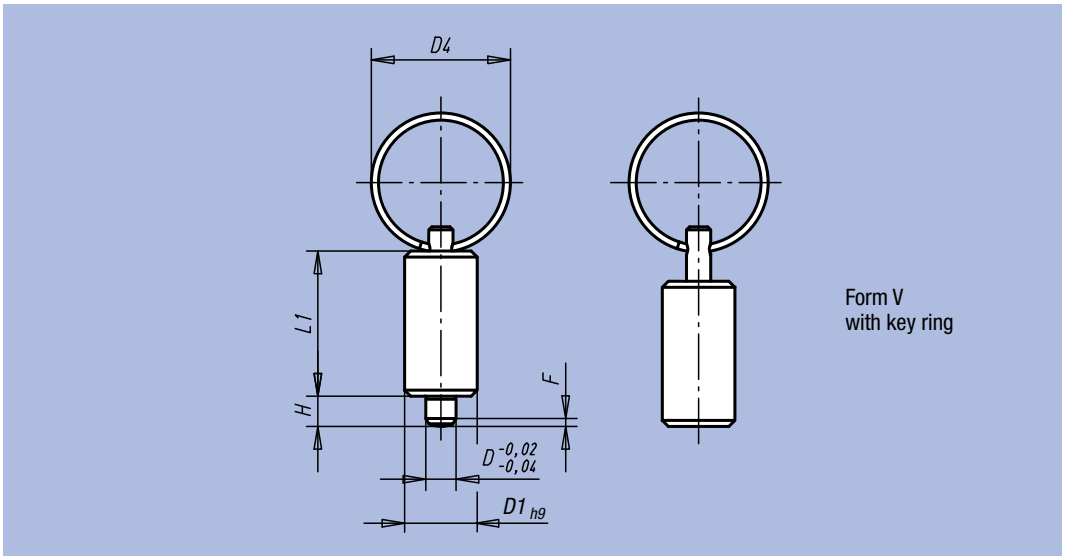

Locking Bolts without collar, in steel, locking pin hardened

Order No.	D	D1	D4	L1	H	F x 30°	Spring force initial pressure F1 approx. N	Spring force final pressure F2 approx. N
03098-4004	4	10	15	21	4	1	6	12
03098-4105	5	12	23	24	5	1,3	5	12
03098-4206	6	14	23	28	6	1,8	6	14
03098-4308	8	18	28	36	8	2,3	15	35
03098-4410	10	22	28	40	10	2,8	15	34

Locking Bolts without collar, in stainless steel, locking pin hardened

Order No.	D	D1	D4	L1	H	F x 30°	Spring force initial pressure F1 approx. N	Spring force final pressure F2 approx. N
03098-04004	4	10	15	21	4	1	6	12
03098-04105	5	12	23	24	5	1,3	5	12
03098-04206	6	14	23	28	6	1,8	6	14
03098-04308	8	18	28	36	8	2,3	15	35
03098-04410	10	22	28	40	10	2,8	15	34

Locking Bolts without collar, in stainless steel, locking pin not hardened

Order No.	D	D1	D4	L1	H	F x 30°	Spring force initial pressure F1 approx. N	Spring force final pressure F2 approx. N
03098-14004	4	10	15	21	4	1	6	12
03098-14105	5	12	23	24	5	1,3	5	12
03098-14206	6	14	23	28	6	1,8	6	14
03098-14308	8	18	28	36	8	2,3	15	35
03098-14410	10	22	28	40	10	2,8	15	34

Locking Bolts with grip



Material:
Steel quality class 5.8

Surface finish:
Black oxide finish. Locking pin hardened and ground.

Sample order:
nlm 03099-040616

Note:
Locking Bolts with grip are used when the locking pin should not project at certain times. Turning the bolt through 180° pulls in the locking pin.
A locking notch ensures that the locking bolt is held in this position.

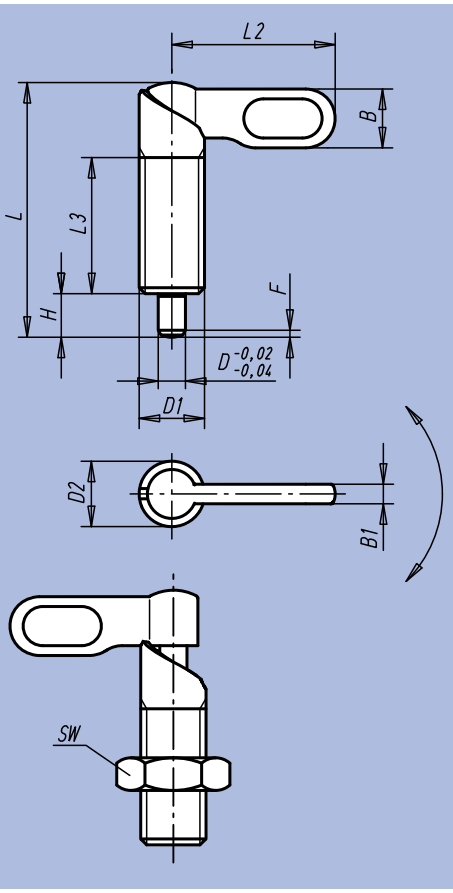

Form A
grip uncoated
without nut

Form C
grip powder-coated
without nut

Form B
grip uncoated
with nut

Form D
grip powder-coated
with nut

Order No. Form A	Order No. Form B	Order No. Form C	Order No. Form D	D	D1	D2	L	L2	L3	B	B1	H	SW	F x 30°	Spring force initial pressure F1 approx. N	Spring force final pressure F2 approx. N
03099-040410	03099-050410	03099-060410	03099-070410	4	M10	10	38	25	20	9	3	6	17	1	8	14
03099-040510	03099-050510	03099-060510	03099-070510	5	M10	10	38	25	20	9	3	6	17	1,3	8	14
03099-040610	03099-050610	03099-060610	03099-070610	6	M10	10	38	25	20	9	3	6	17	1,8	8	14
03099-0404101	03099-0504101	03099-0604101	03099-0704101	4	M10x1	10	38	25	20	9	3	6	17	1	8	14
03099-0405101	03099-0505101	03099-0605101	03099-0705101	5	M10x1	10	38	25	20	9	3	6	17	1,3	8	14
03099-0406101	03099-0506101	03099-0606101	03099-0706101	6	M10x1	10	38	25	20	9	3	6	17	1,8	8	14
03099-040512	03099-050512	03099-060512	03099-070512	5	M12	12	46,8	30	25	10,8	3,6	8	19	1,3	8	15
03099-040612	03099-050612	03099-060612	03099-070612	6	M12	12	46,8	30	25	10,8	3,6	8	19	1,8	8	15
03099-040812	03099-050812	03099-060812	03099-070812	8	M12	12	46,8	30	25	10,8	3,6	8	19	2,3	8	15
03099-0405121	03099-0505121	03099-0605121	03099-0705121	5	M12x1,5	12	46,8	30	25	10,8	3,6	8	19	1,3	8	15
03099-0406121	03099-0506121	03099-0606121	03099-0706121	6	M12x1,5	12	46,8	30	25	10,8	3,6	8	19	1,8	8	15
03099-0408121	03099-0508121	03099-0608121	03099-0708121	8	M12x1,5	12	46,8	30	25	10,8	3,6	8	19	2,3	8	15
03099-040616	03099-050616	03099-060616	03099-070616	6	M16	16	60,4	40	32	14,4	4,8	10	24	1,8	15	35
03099-040816	03099-050816	03099-060816	03099-070816	8	M16	16	60,4	40	32	14,4	4,8	10	24	2,3	15	35
03099-041016	03099-051016	03099-061016	03099-071016	10	M16	16	60,4	40	32	14,4	4,8	10	24	2,8	15	35
03099-0406161	03099-0506161	03099-0606161	03099-0706161	6	M16x1,5	16	60,4	40	32	14,4	4,8	10	24	1,8	15	35
03099-0408161	03099-0508161	03099-0608161	03099-0708161	8	M16x1,5	16	60,4	40	32	14,4	4,8	10	24	2,3	15	35
03099-0410161	03099-0510161	03099-0610161	03099-0710161	10	M16x1,5	16	60,4	40	32	14,4	4,8	10	24	2,8	15	35
03099-040820	03099-050820	03099-060820	03099-070820	8	M20	20	70	50	35	18	6	12	30	2,3	20	60
03099-041020	03099-051020	03099-061020	03099-071020	10	M20	20	70	50	35	18	6	12	30	2,8	20	60
03099-041220	03099-051220	03099-061220	03099-071220	12	M20	20	70	50	35	18	6	12	30	3	20	60
03099-0408201	03099-0508201	03099-0608201	03099-0708201	8	M20x1,5	20	70	50	35	18	6	12	30	2,3	20	60
03099-0410201	03099-0510201	03099-0610201	03099-0710201	10	M20x1,5	20	70	50	35	18	6	12	30	2,8	20	60
03099-0412201	03099-0512201	03099-0612201	03099-0712201	12	M20x1,5	20	70	50	35	18	6	12	30	3	20	60

Locking Bolts with grip in stainless steel



Material:
Stainless steel 1.4305

Surface finish:
Natural finish. Locking pin ground, not hardened.

Sample order:
nlm 03099-1040616

Note:
Locking Bolts with grip are used when the locking pin should not project at certain times. Turning the bolt through 180° pulls in the locking pin.
A locking notch ensures that the locking bolt is held in this position.

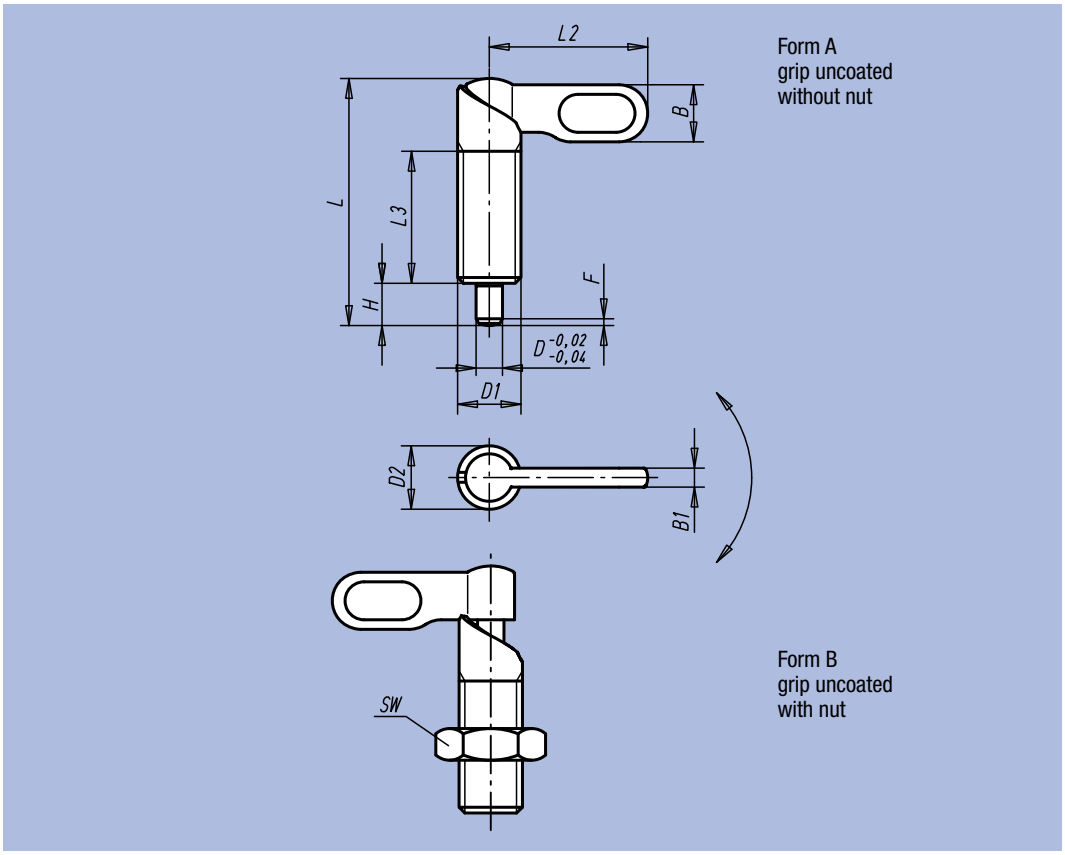

Order No. Form A	Order No. Form B	D	D1	D2	L	L2	L3	B	B1	H	SW	F x 30°	Spring force initial pressure F1 approx. N	Spring force final pressure F2 approx. N
03099-1040410	03099-1050410	4	M10	10	38	25	20	9	3	6	17	1	8	14
03099-1040510	03099-1050510	5	M10	10	38	25	20	9	3	6	17	1,3	8	14
03099-1040610	03099-1050610	6	M10	10	38	25	20	9	3	6	17	1,8	8	14
03099-10404101	03099-10504101	4	M10x1	10	38	25	20	9	3	6	17	1	8	14
03099-10405101	03099-10505101	5	M10x1	10	38	25	20	9	3	6	17	1,3	8	14
03099-10406101	03099-10506101	6	M10x1	10	38	25	20	9	3	6	17	1,8	8	14
03099-1040512	03099-1050512	5	M12	12	46,8	30	25	10,8	3,6	8	19	1,3	8	15
03099-1040612	03099-1050612	6	M12	12	46,8	30	25	10,8	3,6	8	19	1,8	8	15
03099-1040812	03099-1050812	8	M12	12	46,8	30	25	10,8	3,6	8	19	2,3	8	15
03099-10405121	03099-10505121	5	M12x1,5	12	46,8	30	25	10,8	3,6	8	19	1,3	8	15
03099-10406121	03099-10506121	6	M12x1,5	12	46,8	30	25	10,8	3,6	8	19	1,8	8	15
03099-10408121	03099-10508121	8	M12x1,5	12	46,8	30	25	10,8	3,6	8	19	2,3	8	15
03099-1040616	03099-1050616	6	M16	16	60,4	40	32	14,4	4,8	10	24	1,8	15	35
03099-1040816	03099-1050816	8	M16	16	60,4	40	32	14,4	4,8	10	24	2,3	15	35
03099-1041016	03099-1051016	10	M16	16	60,4	40	32	14,4	4,8	10	24	2,8	15	35
03099-10406161	03099-10506161	6	M16x1,5	16	60,4	40	32	14,4	4,8	10	24	1,8	15	35
03099-10408161	03099-10508161	8	M16x1,5	16	60,4	40	32	14,4	4,8	10	24	2,3	15	35
03099-10410161	03099-10510161	10	M16x1,5	16	60,4	40	32	14,4	4,8	10	24	2,8	15	35
03099-1040820	03099-1050820	8	M20	20	70	50	35	18	6	12	30	2,3	20	60
03099-1041020	03099-1051020	10	M20	20	70	50	35	18	6	12	30	2,8	20	60
03099-1041220	03099-1051220	12	M20	20	70	50	35	18	6	12	30	3	20	60
03099-10408201	03099-10508201	8	M20x1,5	20	70	50	35	18	6	12	30	2,3	20	60
03099-10410201	03099-10510201	10	M20x1,5	20	70	50	35	18	6	12	30	2,8	20	60
03099-10412201	03099-10512201	12	M20x1,5	20	70	50	35	18	6	12	30	3	20	60

Bracing Parts



Material, surface finish:
Steel, black oxide finish.

Sample order:
nlm 03099-116

Note:
Bracing Parts provide assistance with assembly for locking bolts with grips and extend their area of application. They can also be used for locking bolts.

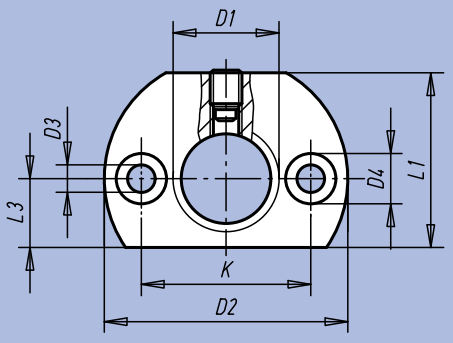

Form A
fastening hole parallel
to Locking Bolt with grip

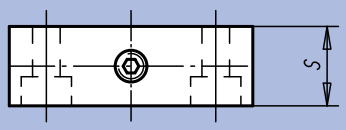

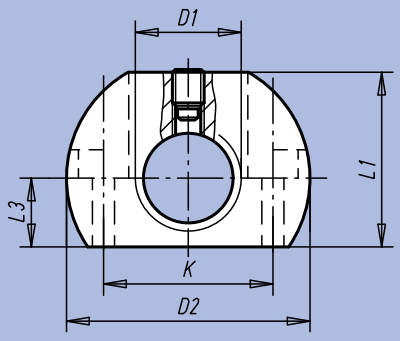

Form B
fastening hole vertical
to Locking Bolt with grip

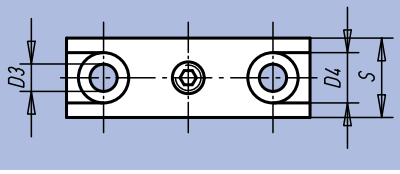

Order No.	Form	D1	D2	D3	D4	K	L1	L3	S
03099-112	A	M12	36	5,5	10	24	25	10	12
03099-1121	A	M12x1,5	36	5,5	10	24	25	10	12
03099-116	A	M16	46	5,5	10	32	33	13	15
03099-1161	A	M16x1,5	46	5,5	10	32	33	13	15
03099-120	A	M20	46	5,5	10	32	33	13	15
03099-1201	A	M20x1,5	46	5,5	10	32	33	13	15
03099-212	B	M12	36	5,5	10	24	25	10	12
03099-2121	B	M12x1,5	36	5,5	10	24	25	10	12
03099-216	B	M16	46	5,5	10	32	33	13	15
03099-2161	B	M16x1,5	46	5,5	10	32	33	13	15
03099-220	B	M20	46	5,5	10	32	33	13	15
03099-2201	B	M20x1,5	46	5,5	10	32	33	13	15

Locking Bolts with grip



Material:
Locking bar 1.0503;
locking pin steel quality class 5.8;
sleeve 1.0403 weldable.

Surface finish:
Black oxide finish. Locking pin hardened and ground.

Sample order:
nlm 03099-091220

Note:
Locking Bolts with grip are used when the locking pin should not project at certain times. Turning the bolt through 180° pulls in the locking pin.
A locking notch ensures that the locking bolt is held in this position.
In order to weld the locking bolt with grip to another surface, we recommend inert gas-shielded welding with MIG welding equipment.

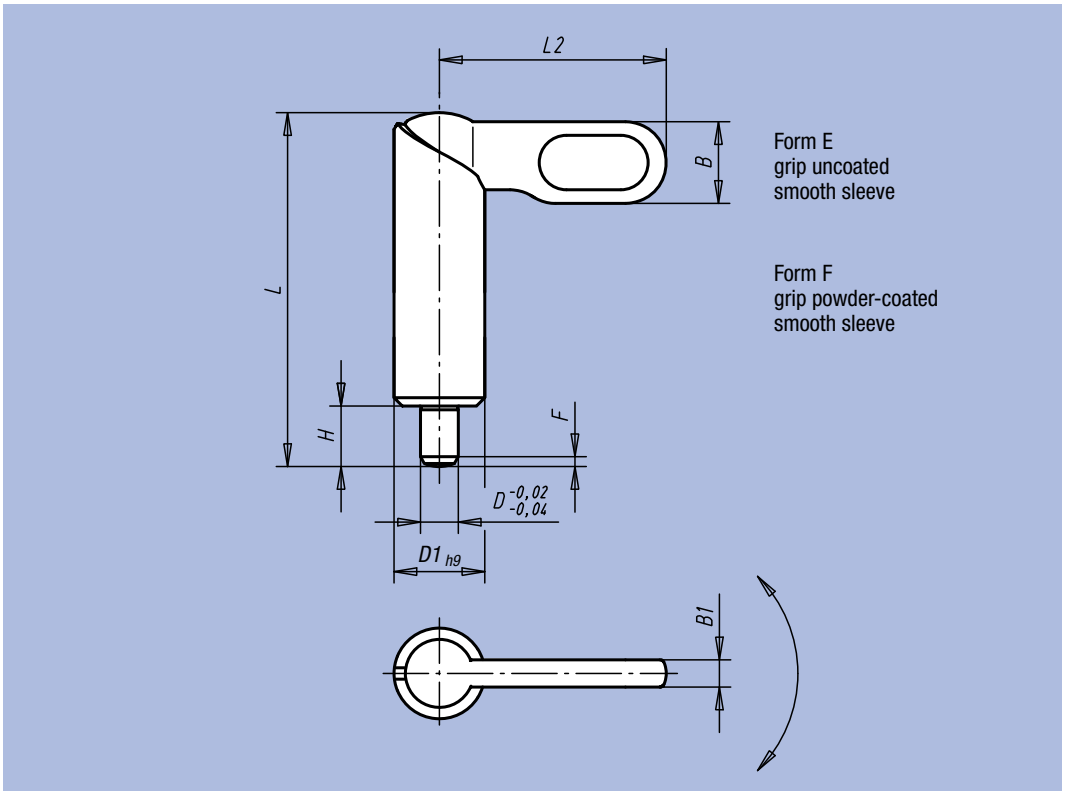

Order No. Form E	Order No. Form F	D	D1	L	L2	B	B1	H	F x 30°	Spring force initial pressure F1 approx. N	Spring force final pressure F2 approx. N
03099-080410	03099-090410	4	10	38	25	9	3	6	1	8	14
03099-080510	03099-090510	5	10	38	25	9	3	6	1,3	8	14
03099-080610	03099-090610	6	10	38	25	9	3	6	1,8	8	14
03099-080512	03099-090512	5	12	46,8	30	10,8	3,6	8	1,3	8	15
03099-080612	03099-090612	6	12	46,8	30	10,8	3,6	8	1,8	8	15
03099-080812	03099-090812	8	12	46,8	30	10,8	3,6	8	2,3	8	15
03099-080616	03099-090616	6	16	60,4	40	14,4	4,8	10	1,8	15	35
03099-080816	03099-090816	8	16	60,4	40	14,4	4,8	10	2,3	15	35
03099-081016	03099-091016	10	16	60,4	40	14,4	4,8	10	2,8	15	35
03099-080820	03099-090820	8	20	70	50	18	6	12	2,3	20	60
03099-081020	03099-091020	10	20	70	50	18	6	12	2,8	20	60
03099-081220	03099-091220	12	20	70	50	18	6	12	3	20	60

Locking Bolts with grip in stainless steel



Material:
Locking bar 1.4308;
locking pin 1.4305;
sleeve 1.4301 weldable.

Surface finish:
Natural finish. Locking pin ground, not hardened.

Sample order:
nlm 03099-1081220

Note:
Locking Bolts with grip are used when the locking pin should not project at certain times. Turning the bolt through 180° pulls in the locking pin.
A locking notch ensures that the locking bolt is held in this position.
In order to weld the locking bolt with grip to another surface, we recommend inert gas-shielded welding with MIG welding equipment.

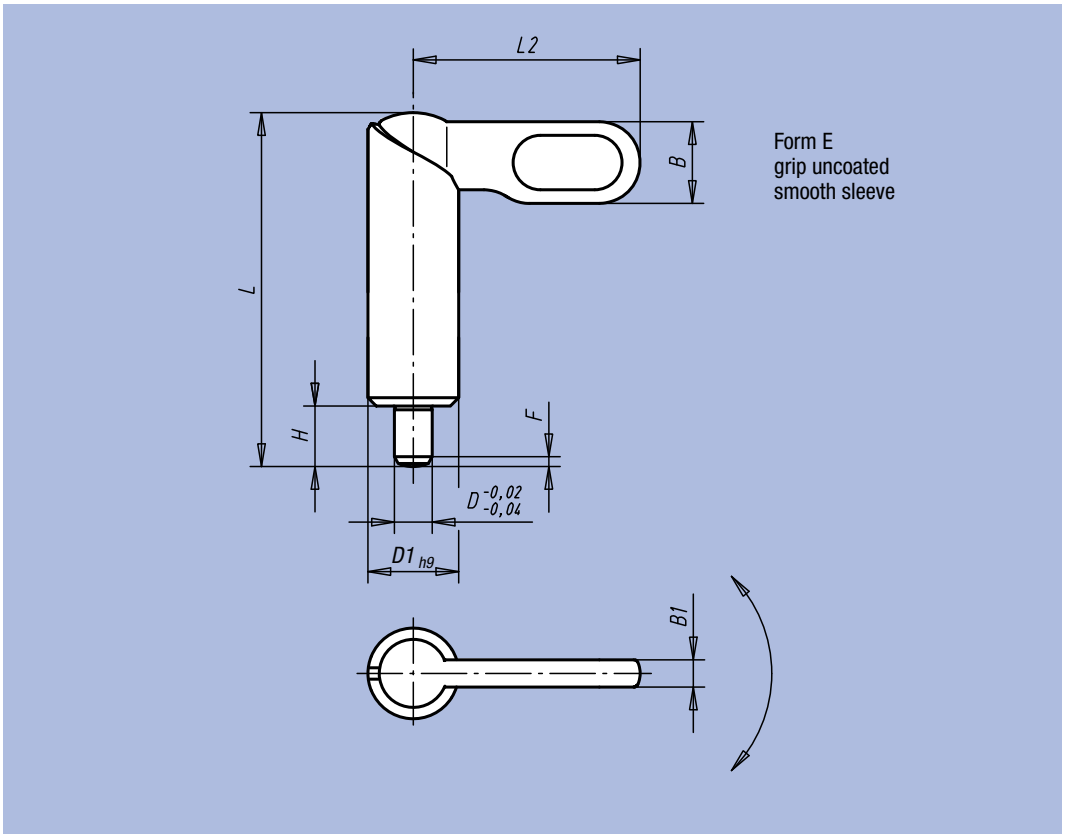

Order No.	Form	D	D1	L	L2	B	B1	H	F x 30°	Spring force initial pressure F1 approx. N	Spring force final pressure F2 approx. N
03099-1080410	E	4	10	38	25	9	3	6	1	8	14
03099-1080510	E	5	10	38	25	9	3	6	1,3	8	14
03099-1080610	E	6	10	38	25	9	3	6	1,8	8	14
03099-1080512	E	5	12	46,8	30	10,8	3,6	8	1,3	8	15
03099-1080612	E	6	12	46,8	30	10,8	3,6	8	1,8	8	15
03099-1080812	E	8	12	46,8	30	10,8	3,6	8	2,3	8	15
03099-1080616	E	6	16	60,4	40	14,4	4,8	10	1,8	15	35
03099-1080816	E	8	16	60,4	40	14,4	4,8	10	2,3	15	35
03099-1081016	E	10	16	60,4	40	14,4	4,8	10	2,8	15	35
03099-1080820	E	8	20	70	50	18	6	12	2,3	20	60
03099-1081020	E	10	20	70	50	18	6	12	2,8	20	60
03099-1081220	E	12	20	70	50	18	6	12	3	20	60

Locking bar



Material:
Housing in die cast zinc.
Grip, support and slotfixing thermoplastic PA.
Bolt in stainless steel.

Surface finish:
Housing silver painted.
Grip, support and slotfixing black.
Bolt natural finish.

Sample order:
nlm 03102-38038028

Note:
Spring-loaded Closing Pin.
Included in delivery are:
- for assembly on flat surfaces, 2 bases.
- for assembly on profiles with slot, 2 slotted fixtures each (for 8 and 10 mm slot).



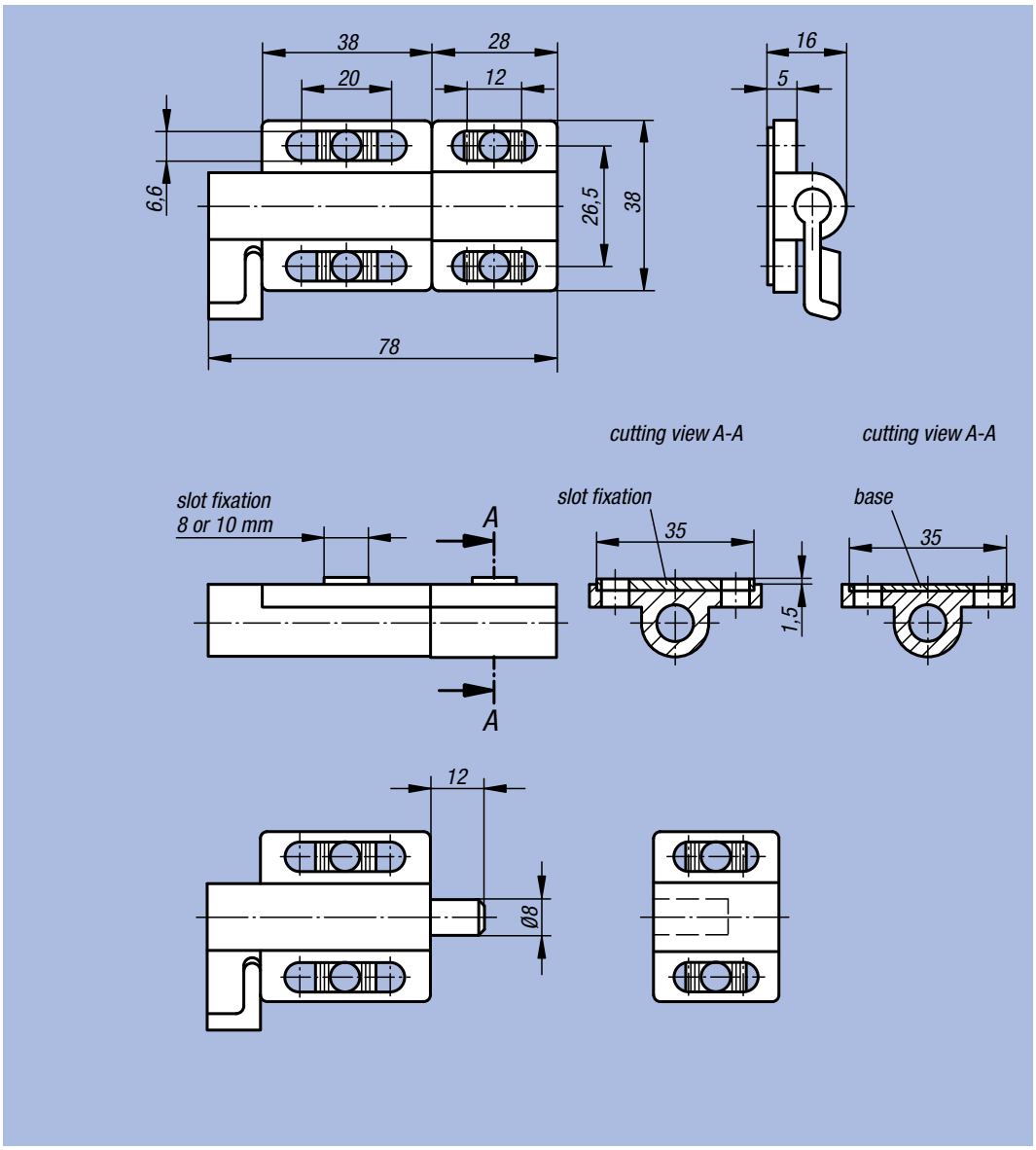

Order No.	Spring force initial pressure F1 approx. N	Spring force final pressure F2 approx. N	kg
03102-38038028	5	15	0,120

Straight Bolts, peelable

Models A and C



Material:
Tool steel

Surface finish:
Hardened and ground (56 +2 HRC)

Sample order:
nlm 03105-12

Note:
Locating Pins can be removed easily with an extractor

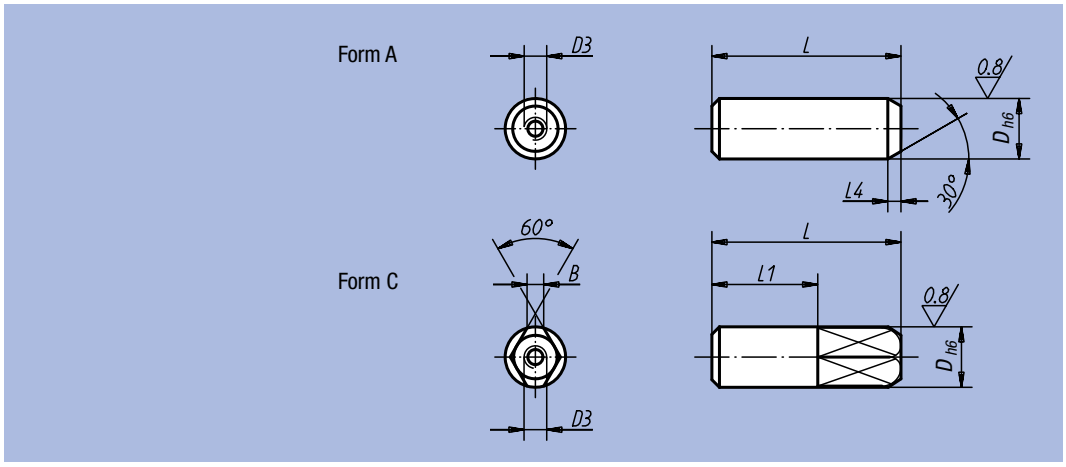

Order No. Form A	Order No. Form C	D	D3	L	L1	L4	B
03105-08	03105-082	8	M3	25	14	3	2,2
03105-10	03105-102	10	M3	30	17	3	3
03105-12	03105-122	12	M5	34	20	4	3,5
03105-16	03105-162	16	M5	42	26	4	5
03105-20	03105-202	20	M5	47	30	5	6
03105-25	03105-252	25	M5	49	30	5	8

Straight Bolts, peelable

Models B and D



Material:
Tool steel

Surface finish:
Hardened and ground (55-60 HRC)

Sample order:
nlm 03106-20

Note:
Locating Pins can be removed easily with an extractor

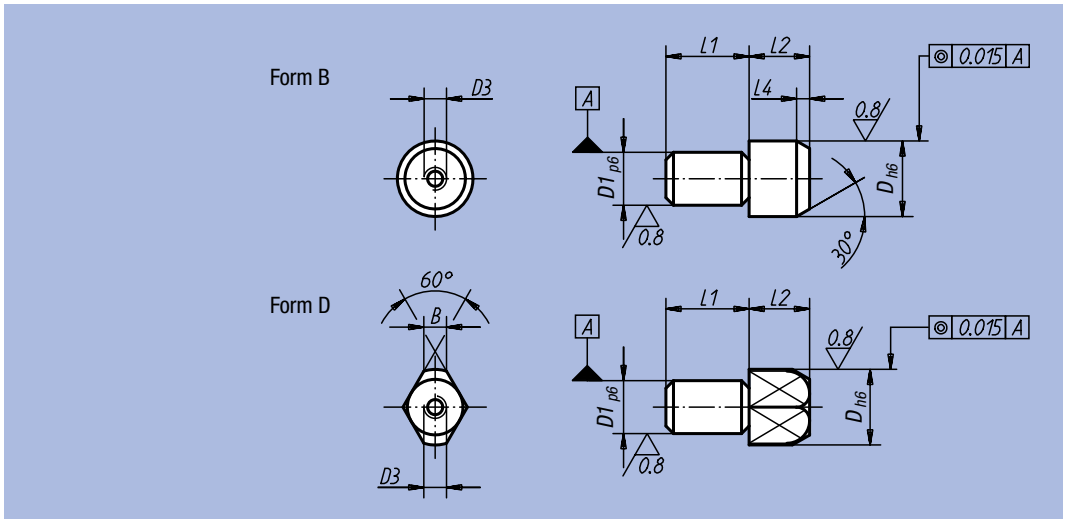

Order No. Form B	Order No. Form D	D	D1	D3	L1	L2	L4	B
03106-10	03106-102	10	7	M3	11	11	3	3
03106-12	03106-122	12	8	M5	13	12	4	3,5
03106-16	03106-162	16	12	M5	18	14	4,5	5
03106-20	03106-202	20	14	M5	22	15	5	6
03106-22	03106-222	22	16	M5	22	17	5	7
03106-25	03106-252	25	18	M5	25	17	5	8

Straight Bolts

with ball end Form A



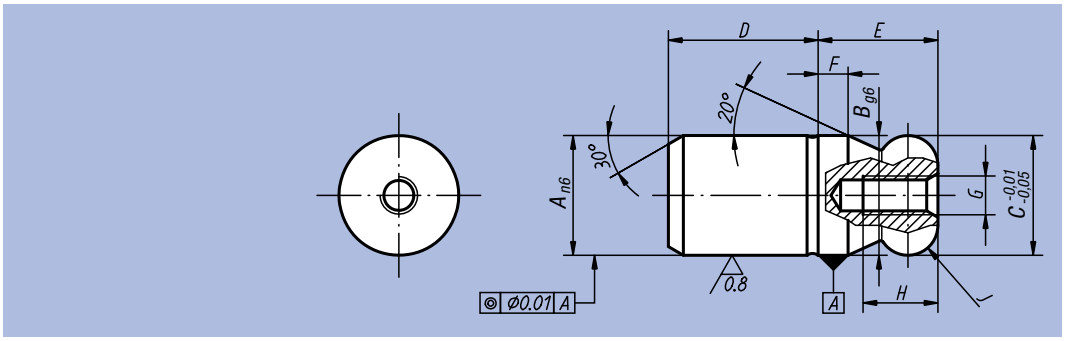

Material:
Tool steel or stainless steel 1.4305

Surface finish:
Steel hardened and ground,
stainless steel ground and kolsterised

Sample order:
nlm 03107-12

Note:
Straight Bolts with ball end facilitate mounting operations as they are specifically designed for this process. The tendency to jam parts, also known as „drawer effect“, is caused by forces not effective in the bolt axis or by parts being mounted at a slanted angle. This tendency is minimized by the ball end and the ball incline (see also mounting illustration 03108 Form B).

Order No. Material steel	Order No. Material stainless steel	A	B	C	D	E	F	G	H	J	kg
03107-08	03107-508	8	8	8	10	8	2	M3	6	R 2	0,006
03107-10	03107-510	10	10	10	13	10	2,5	M3	6	R 2,5	0,012
03107-12	03107-512	12	12	12	15	12	3	M4	8	R 3	0,021
03107-16	03107-516	16	16	16	20	16	4	M5	10	R 4	0,051
03107-20	03107-520	20	20	20	25	20	5	M5	10	R 5	0,101
03107-25	-	25	25	25	25	25	6	M5	10	R 6	0,176
03107-30	-	30	30	30	30	30	8	M6	12	R 8	0,307
03107-40	-	40	40	40	40	40	10	M6	12	R 10	0,729
03107-50	-	50	50	50	50	50	12	M6	12	R 12	1,422

nlm 03107

Straight Bolts

with flattened ball end Form C



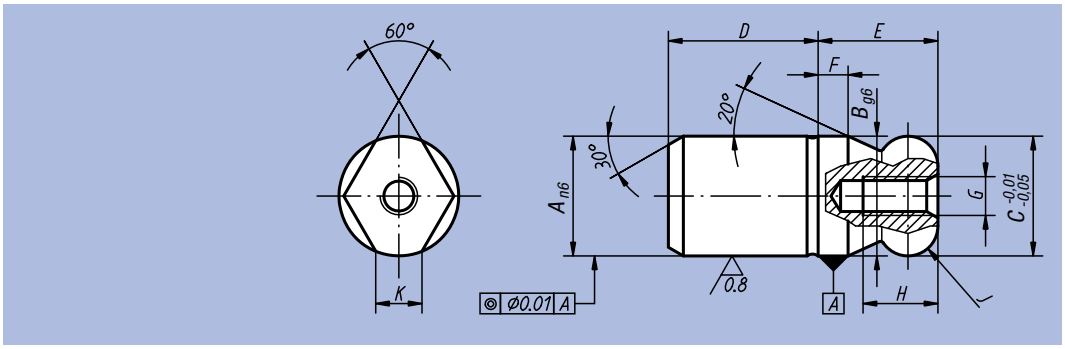

Material:
Tool steel or stainless steel 1.4305

Surface finish:
Steel hardened and ground,
stainless steel ground and kolsterised

Sample order:
nlm 03107-162

Note:
Straight Bolts with ball end facilitate mounting operations as they are specifically designed for this process. The tendency to jam parts, also known as „drawer effect“, is caused by forces not effective in the bolt axis or by parts being mounted at a slanted angle. This tendency is minimized by the ball end and the ball incline (see also mounting illustration 03108 Form B).

Order No. Material steel	Order No. Material stainless steel	A	B	C	D	E	F	G	H	J	K	kg
03107-082	03107-5082	8	8	8	10	8	2	M3	6	R 2	1,9	0,005
03107-102	03107-5102	10	10	10	13	10	2,5	M3	6	R 2,5	2,5	0,011
03107-122	03107-5122	12	12	12	15	12	3	M4	8	R 3	2,5	0,017
03107-162	03107-5162	16	16	16	20	16	4	M5	10	R 4	4,3	0,044
03107-202	03107-5202	20	20	20	25	20	5	M5	10	R 5	5	0,088
03107-252	-	25	25	25	25	25	6	M5	10	R 6	5,6	0,149
03107-302	-	30	30	30	30	30	8	M6	12	R 8	8,8	0,270
03107-402	-	40	40	40	40	40	10	M6	12	R 10	12,8	0,657
03107-502	-	50	50	50	50	50	12	M6	12	R 12	16,7	1,243

Straight Bolts

with ball end Form B



Material:
Tool steel or stainless steel 1.4305

Surface finish:
Steel hardened and ground,
stainless steel ground and kolsterised

Sample order:
nlm 03108-20

Note:
Straight Bolts with ball end facilitate mounting operations as they are specifically designed for this process. The tendency to jam parts, also known as „drawer effect“, is caused by forces not effective in the bolt axis or by parts being mounted at a slanted angle. This tendency is minimized by the ball end and the ball incline (see mounting illustration).

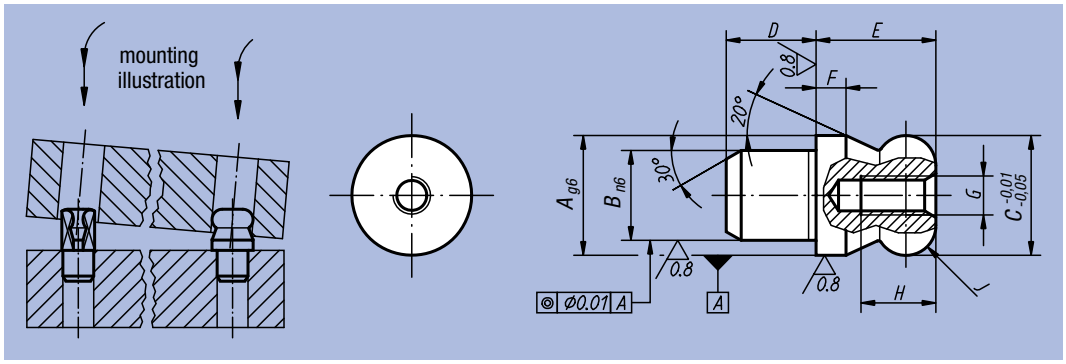

Order No. Material steel	Order No. Material stainless steel	A	B	C	D	E	F	G	H	J	kg
03108-10	03108-510	10	7	10	7	10	2,5	M3	6	R 2,5	0,007
03108-12	03108-512	12	8	12	8	12	3	M4	8	R 3	0,011
03108-16	03108-516	16	12	16	12	16	4	M5	10	R 4	0,030
03108-20	03108-520	20	14	20	14	20	5	M5	10	R 5	0,057
03108-22	-	22	16	22	16	22	5,5	M5	10	R 5,5	0,079
03108-25	-	25	18	25	18	25	6	M5	10	R 6	0,116

nlm 03108

Straight Bolts

with flattened ball end Form D



Material:
Tool steel or stainless steel 1.4305

Surface finish:
Steel hardened and ground,
stainless steel ground and kolsterised

Sample order:
nlm 03108-162

Note:
Straight Bolts with ball end facilitate mounting operations as they are specifically designed for this process. The tendency to jam parts, also known as „drawer effect“, is caused by forces not effective in the bolt axis or by parts being mounted at a slanted angle. This tendency is minimized by the ball end and the ball incline (see also mounting illustration 03108 Form B).

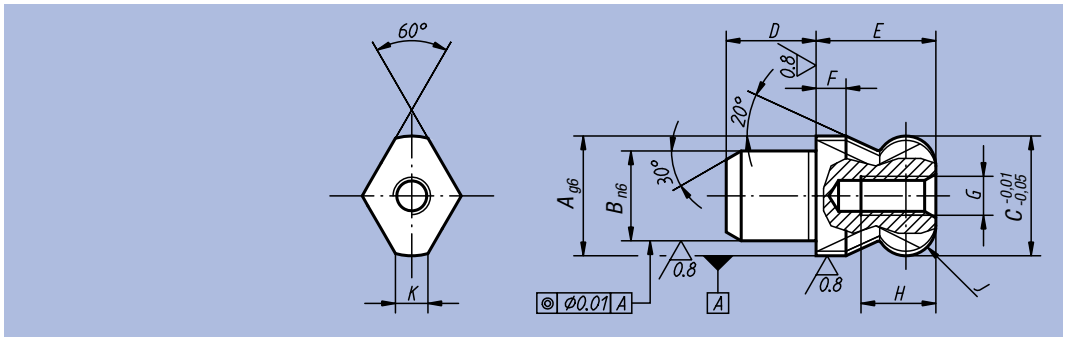

Order No. Material steel	Order No. Material stainless steel	A	B	C	D	E	F	G	H	J	K	kg
03108-102	03108-5102	10	7	10	7	10	2,5	M3	6	R 2,5	2,5	0,005
03108-122	03108-5122	12	8	12	8	12	3	M4	8	R 3	2,5	0,008
03108-162	03108-5162	16	12	16	12	16	4	M5	10	R 4	4,3	0,023
03108-202	03108-5202	20	14	20	14	20	5	M5	10	R 5	5	0,045
03108-222	-	22	16	22	16	22	5,5	M5	10	R 5,5	5	0,062
03108-252	-	25	18	25	18	25	6	M5	10	R 6	5,6	0,091

Centring Pins

for central hole



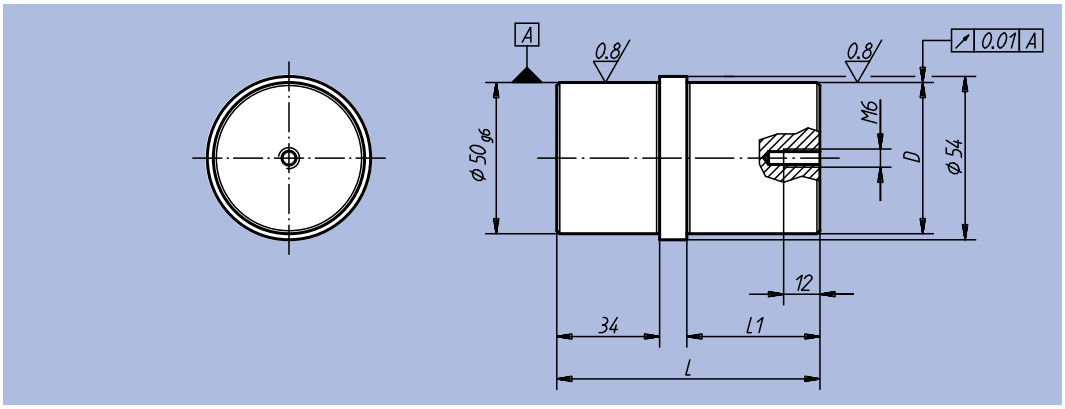

Material:
Steel.
Surface finish:
case-hardened.
Fitting diameter ground.
Sample order:
nlm 03110-5025
Note:
Centring pins for central holes are suitable for basic elements 01148, 01263, 01265, 01267 and 01850.

Order No.	D	L	L1	kg
03110-5025	25 g6	77	34	0,810
03110-5030	30 h6	87	44	0,920
03110-5050	50 g6	87	44	1,350

Centring Pins

for aligning hole



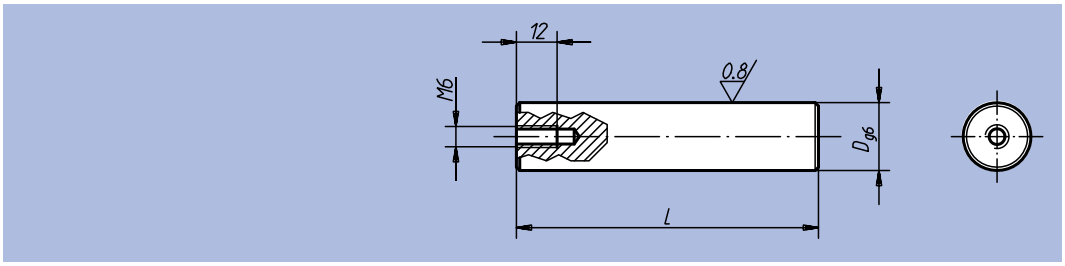

Material:
Steel.
Surface finish:
case-hardened.
Fitting diameter ground.
Sample order:
nlm 03112-25125
Note:
Centring pins for aligning holes are suitable for basic elements 01263, 01265 and 01850.

Order No.	D	L	kg
03112-20075	20	75	0,180
03112-20089	20	89	0,215
03112-25125	25	125	0,477

Centring Pins

for aligning hole



Material:
Steel.

Surface finish:
Case-hardened.
Fitting diameter ground.

Sample order:
nlm 03114-2520

Note:
Centring pins for aligning holes are suitable for palettes 01148.

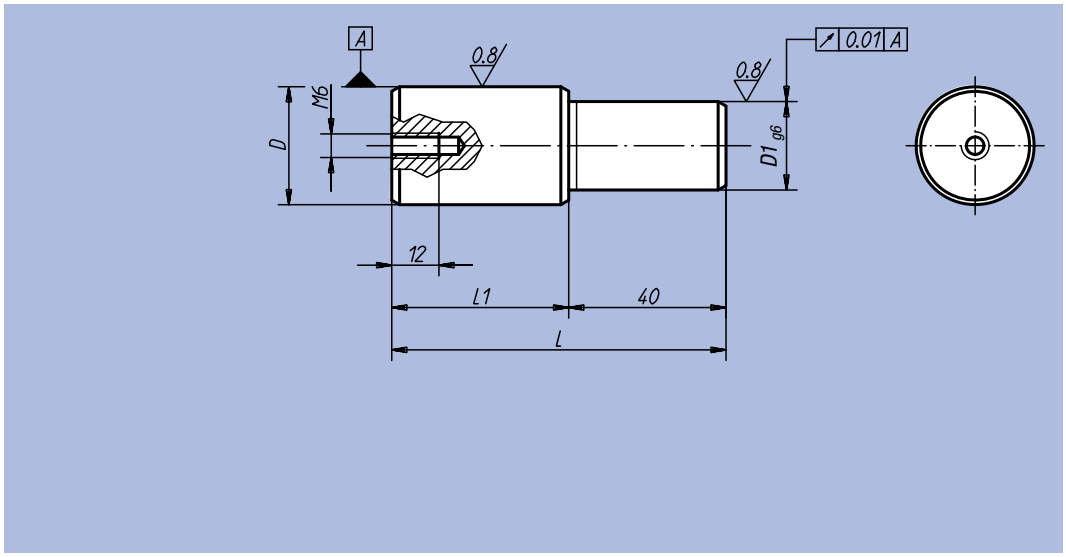

Order No.	D	D1	L	L1	kg
03114-2520	25 g6	20	75	35	0,230
03114-3020	30 h6	20	85	45	0,345
03114-3025	30 h6	25	85	45	0,400

Notes:

Cylindrical Positioning Pins



Material:
Tool steel

Surface finish:
Hardened and ground

Sample order:
nlm 03130-08

Note:
Face surfaces with centre hole.

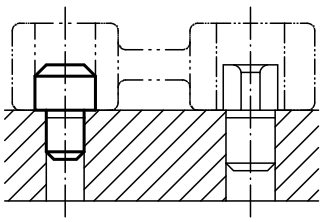

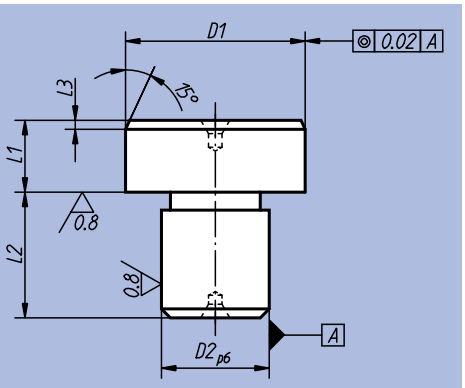

Order No.	Surface finish	D1	D2	L1	L2	L3	kg
03120-05	D1 ground	8 g6	5	8	8	2	0,005
03120-07	D1 ground	10 g6	7	8	8	2	0,010
03120-08	D1 ground	12 g6	8	8	10	2	0,012
03120-081	D1 ground	14 g6	8	8	10	3	0,015
03120-09	D1 ground	16 g6	9	8	12	3	0,020
03120-12	D1 ground	18 g6	12	8	12	3	0,028
03120-121	D1 ground	20 g6	12	8	14	3	0,034
03120-14	D1 ground	22 g6	14	8	14	3	0,038
03120-16	D1 ground	25 g6	16	8	16	3	0,044
03130-05	D1 ground	8,5	5	8	8	2	0,005
03130-07	D1 not ground	10,5	7	8	8	2	0,010
03130-08	D1 not ground	12,5	8	8	10	2	0,012
03130-081	D1 not ground	14,5	8	8	10	3	0,015
03130-09	D1 not ground	16,5	9	8	12	3	0,020
03130-12	D1 not ground	18,5	12	8	12	3	0,028
03130-121	D1 not ground	20,5	12	8	14	3	0,034
03130-14	D1 not ground	22,5	14	8	14	3	0,038
03130-16	D1 not ground	25,5	16	8	16	3	0,044

Free-Milled Positioning Pins



Material:
Tool steel

Surface finish:
Hardened and ground

Sample order:
nlm 03140-08

Note:
Face surfaces with centre hole.

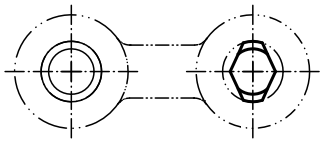

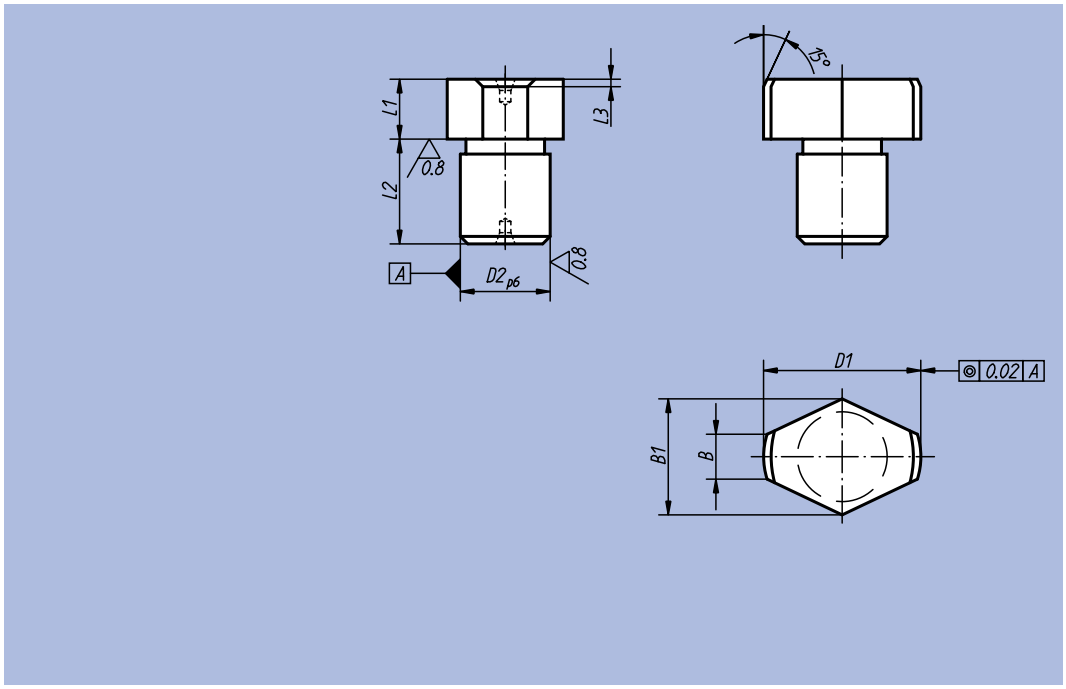

Order No.	Surface finish	D1	D2	L1	L2	L3	B	B1	kg
03140-05	D1 ground	8 g6	5	8	8	2	2	6,6	0,004
03140-07	D1 ground	10 g6	7	8	8	2	3	8,6	0,006
03140-08	D1 ground	12 g6	8	8	10	2	3	9,8	0,010
03140-081	D1 ground	14 g6	8	8	10	3	3,5	11,2	0,011
03140-09	D1 ground	16 g6	9	8	12	3	4	13,2	0,015
03140-12	D1 ground	18 g6	12	8	12	3	4,5	14,7	0,021
03140-121	D1 ground	20 g6	12	8	14	3	5	16,6	0,025
03140-14	D1 ground	22 g6	14	8	14	3	5,6	18	0,028
03140-16	D1 ground	25 g6	16	8	16	3	6	19,8	0,034
03150-05	D1 not ground	8,5	5	8	8	2	2	6,6	0,004
03150-07	D1 not ground	10,5	7	8	8	2	3	8,6	0,006
03150-08	D1 not ground	12,5	8	8	10	2	3	9,8	0,010
03150-081	D1 not ground	14,5	8	8	10	3	3,5	11,2	0,011
03150-09	D1 not ground	16,5	9	8	12	3	4	13,2	0,015
03150-12	D1 not ground	18,5	12	8	12	3	4,5	14,7	0,021
03150-121	D1 not ground	20,5	12	8	14	3	5	16,6	0,025
03150-14	D1 not ground	22,5	14	8	14	3	5,6	18	0,028
03150-16	D1 not ground	25,5	16	8	16	3	6	19,8	0,034

Locating Bolts spread type



Material:
Tempered steel

Surface finish:
Heat-treated and black oxide finish, locating diameter and guide surfaces ground

Sample order:
nlm 03151-16016

Note:
With the aid of spread type Locating Bolts, grid plates can, for example, be positioned on machine tables with T-slots (see illustration).
The plates to be positioned must have two holes matching the spread type shaft.
The continuous hexagonal socket in the spread type screw allows operation from two sides.

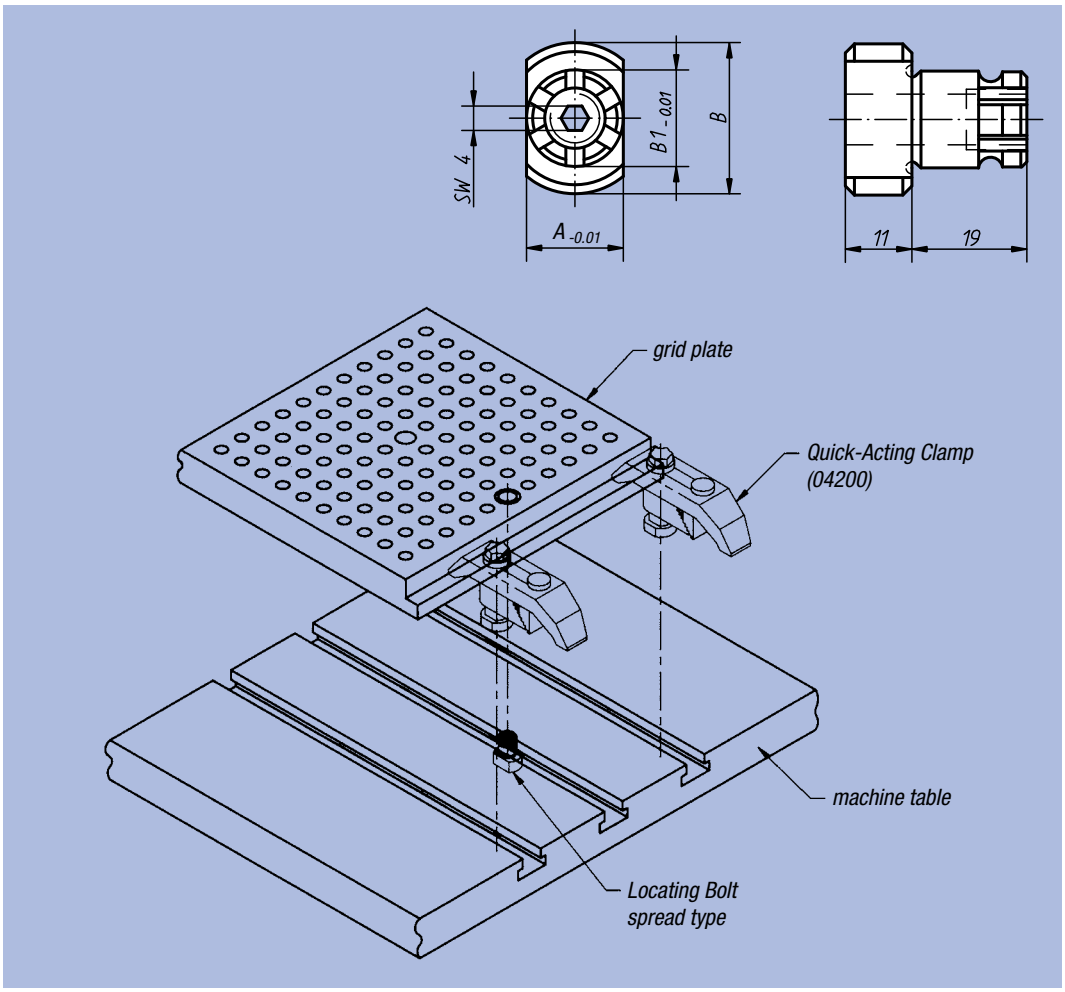

Order No.	A	B	B1	kg
03151-12016	12	25	16	0,040
03151-14016	14	25	16	0,050
03151-16016	16	25	16	0,050
03151-18016	18	29	16	0,050
03151-20016	20	29	16	0,060
03151-22016	22	29	16	0,060
03151-24020	24	35	20	0,240
03151-28020	28	35	20	0,280
03151-32020	32	40	20	0,320

Ball Lock
Positioning and Clamping System





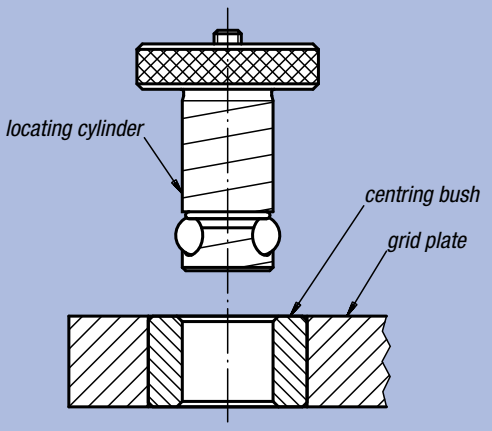

recommanded installation

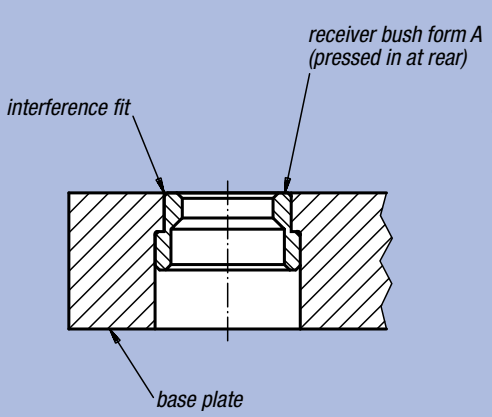

alternative installation

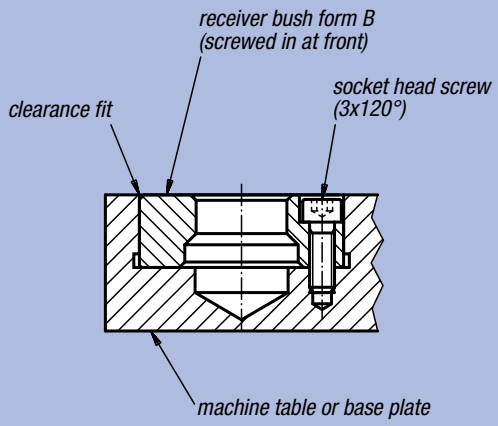

General Information

1. The ball lock positioning and clamping system makes precise positioning and fastening of clamping and base plates possible in just seconds. The system consists of a locating cylinder, a centring bush and a receiver bushing.
2. Three easy steps to applying the ball lock positioning and clamping system:

– Mount two receiver bushings on the machine table or on the base plate, as well as two centring bushings on the fastening plate.

– Insert the locating cylinder through the centring bushings onto the receiver bushings in order to attain the precise positioning.

– Turn fixing screws in each locating cylinder approx. twice in order to attain positive tight clamping. Eighteen different locating cylinders, two centring bushing types and two receiver bushing models are available.

3. A centring bush quality class I (left below) and a centring bush quality class I or II (right above) should be installed in each fastening plate as far apart from one another as possible. When more than two locating cylinders are used, in order to attain additional retention force (this is dependent on the application), drill holes must be drilled in the fastening plate at 0.4 mm up to 0.8 mm larger than the selected locating cylinder-diameter
4. If, for example, the centre distance between the two positioning drillholes in the machine table, as well as in the fastening plate, is adhered to with a tolerance of ±0.005 mm and two centring bushings quality class I are used, a repeat accuracy within 0.013 mm can be achieved. For a somewhat lesser repeat accuracy within 0.038 mm, a centring bushing quality class I and a centring bushing quality class II at a centre distance tolerance of ±0.02 mm are used.
5. The difference between the centring bush quality class I and the centring bush quality class II is that the centring bush quality class II has a larger internal diameter in order to correspond to the greater centre distance tolerance in the machine table or the base plate.

Locating Cylinders



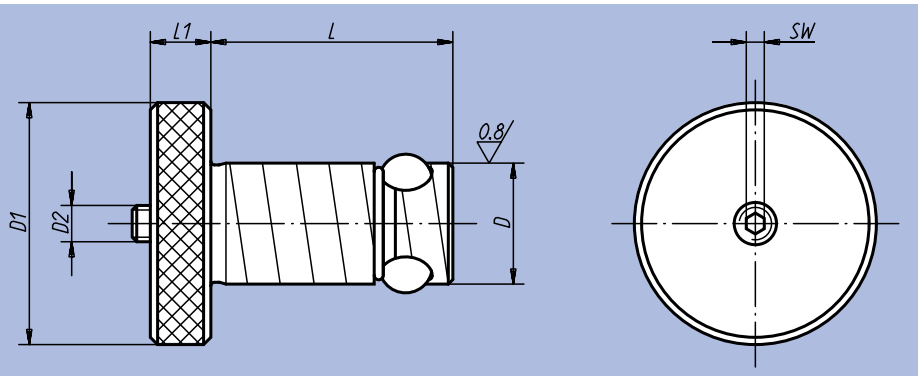

Material:
Locating cylinder tempered steel;
balls roller bearing steel

Surface finish:
Locating cylinder heat-treated, black oxide finish.
Balls hardened, natural finish.

Sample order:
nlm 03153-16020

Note:
By tightening the moving screw (D2) the centre ball is pressed downwards and in turn forces the three locking balls outwards, where they are locked in the tapered Receiver Bushing.
With this easy-to-operate system machine set-up times are up to twelve times shorter than when conventional methods are used.

Repair Kit:



Order No.	Grid plate thickness ±0,05	D	D1	D2	L	L1	SW	Holding force F kN	Tightening torque Nm	kg	Order No. Repair Kit
03153-13013	13	13	22	M5	27,6	6	2,5	3,3	1	0,040	03153-913013
03153-13020	20	13	22	M5	34,6	6	2,5	3,3	1	0,050	03153-913020
03153-16020	20	16	32	M6	36,5	8	3	5,3	3	0,100	03153-916020
03153-16025	25	16	32	M6	41,5	8	3	5,3	3	0,110	03153-916025
03153-20020	20	20	40	M6	39,5	10	3	13,3	4	0,200	03153-920020
03153-20025	25	20	40	M6	44,5	10	3	13,3	4	0,230	03153-920025
03153-25020	20	25	45	M8	44	10	4	30	9	0,270	03153-925020
03153-25025	25	25	45	M8	49	10	4	30	9	0,300	03153-925025
03153-30020	20	30	50	M10	49	13	5	44	15	0,480	03153-930020
03153-30025	25	30	50	M10	54	13	5	44	15	0,520	03153-930025
03153-35020	20	35	60	M12	51	13	6	68	25	0,580	03153-935020
03153-35025	25	35	60	M12	56	13	6	68	25	0,640	03153-935025
03153-35040	40	35	60	M12	71	13	6	68	25	0,750	03153-935040
03153-35050	50	35	60	M12	81	13	6	68	25	0,810	03153-935050
03153-50020	20	50	75	M20	64	20	10	88	50	1,510	03153-950020
03153-50025	25	50	75	M20	69	20	10	88	50	1,590	03153-950025
03153-50040	40	50	75	M20	84	20	10	88	50	1,790	03153-950040
03153-50050	50	50	75	M20	94	20	10	88	50	1,990	03153-950050

Centring Liner Bushings



Material:
Roller bearing steel.

Surface finish:
Hardened, black oxide finish.

Sample order:
nlm 03154-113020

Note:
At a distance-between-centre tolerance of ± 0.005 mm and use of two Centring Liner Bushings grade I, a clamping repeating accuracy of within 0.013 mm is possible.
At a distance-between-centre tolerance of ± 0.02 mm and use of one Centring Liner Bushing grade I and one Centring Liner Bushing grade II, a clamping repeating accuracy of within 0.038 mm is possible.
The Centring Liner Bushings are pressed into the receiver holes in the grid plates with light pressure.
For further details see “General information“.

* Tol. Centring Bushing grade 1
+0.005 / +0.018
Tol. Centring Bushing grade 2
+0.025 / +0.050

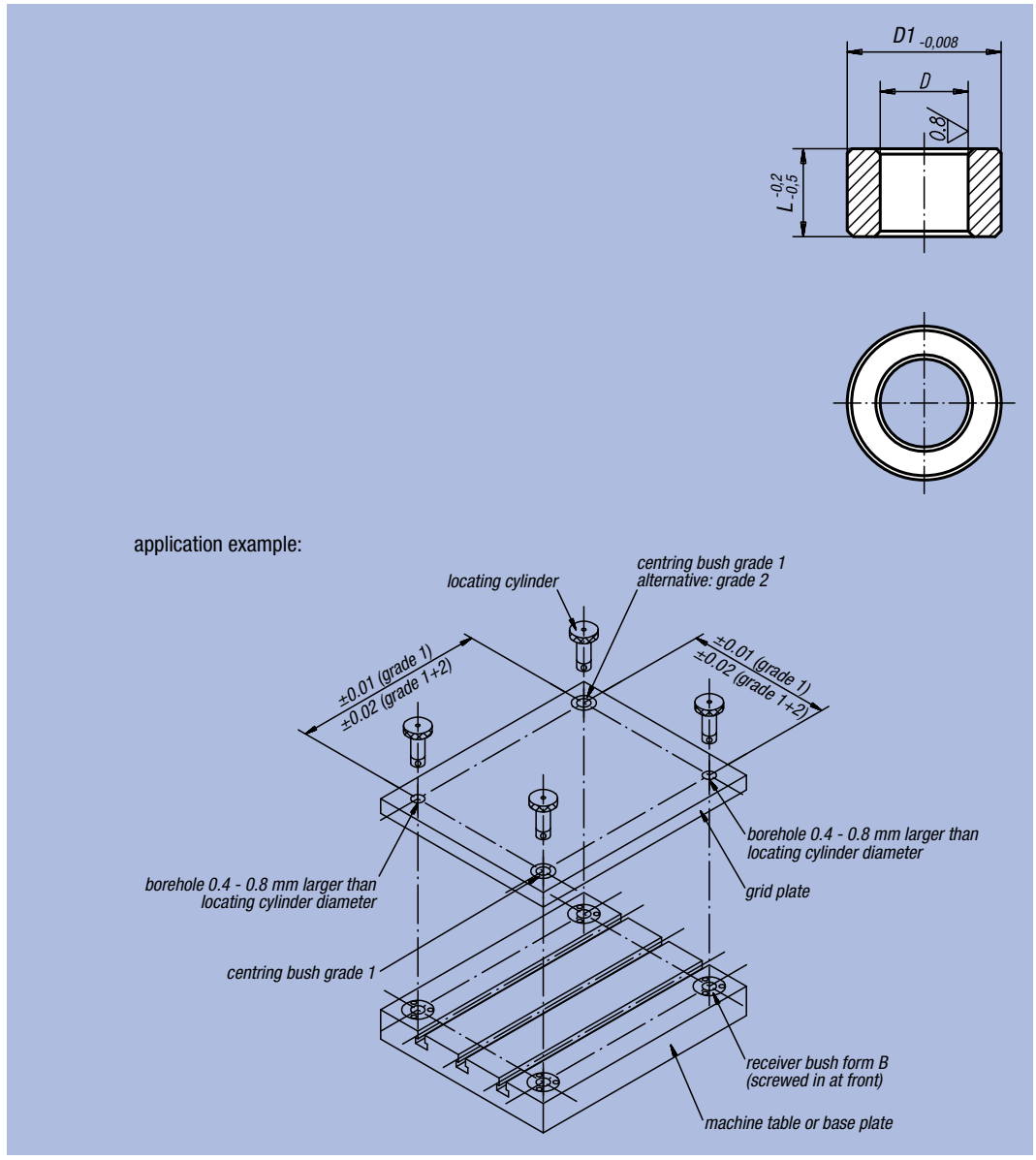

Order No. grade 1	Order No. grade 2	D	D1	L	Hole for centering bushing Ø +0,010	kg
03154-113013	03154-213013	13*	19,040	13	19,016	0,015
03154-113020	03154-213020	13*	19,040	20	19,016	0,024
03154-116020	03154-216020	16*	25,042	20	25,016	0,045
03154-116025	03154-216025	16*	25,042	25	25,016	0,057
03154-120020	03154-220020	20*	35,042	20	35,018	0,120
03154-120025	03154-220025	20*	35,042	25	35,018	0,150
03154-125020	03154-225020	25*	35,042	20	35,018	0,074
03154-125025	03154-225025	25*	35,042	25	35,018	0,093
03154-130020	03154-230020	30*	45,042	20	45,018	0,139
03154-130025	03154-230025	30*	45,042	25	45,018	0,174
03154-135020	03154-235020	35*	45,042	20	45,018	0,099
03154-135025	03154-235025	35*	45,042	25	45,018	0,123
03154-135040	03154-235040	35*	45,042	40	45,018	0,198
03154-135050	03154-235050	35*	45,042	50	45,018	0,248
03154-150020	03154-250020	50*	63,546	20	63,521	0,190
03154-150025	03154-250025	50*	63,546	25	63,521	0,237
03154-150040	03154-250040	50*	63,546	40	63,521	0,379
03154-150050	03154-250050	50*	63,546	50	63,521	0,474

Receiver Bushings

Model A (pressed in at rear)



Material:
Tempered steel

Surface finish:
Heat-treated and black oxide finish.

Sample order:
nlm 03155-20

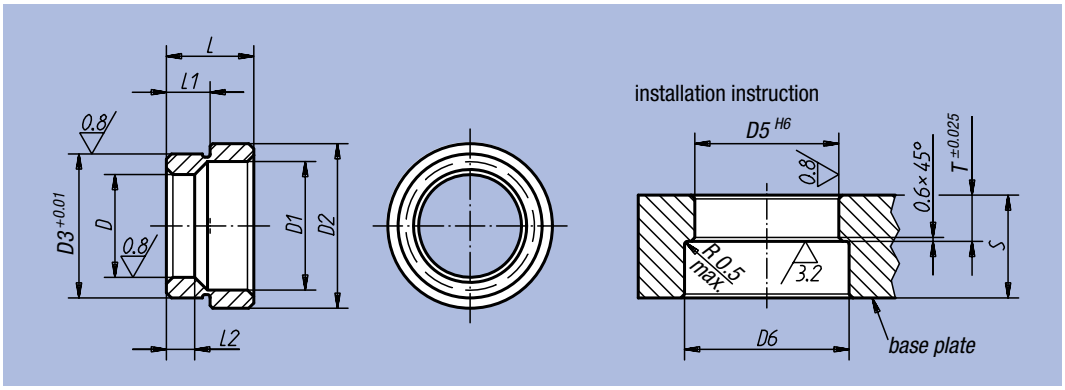

Order No.	D	D1	D2	D3	L	L1	L2	D5	D6	T	Min. grid plate thickness S	kg
03155-13	13	17,3	25	20,03	12,1	6,6	5,58	20	26	6,9	20	0,020
03155-16	16	20,7	28,6	22,03	12,1	6,9	6,6	22	29	7,25	20	0,020
03155-20	20	24,8	32,2	28,03	17,1	8,42	8,13	28	33	8,75	25	0,050
03155-25	25	30,4	40,2	35,03	21	10,22	10,16	35	41	10,55	25	0,080
03155-30	30	36,2	48,2	42,03	21,8	10,63	11,18	42	49	10,95	30	0,140
03155-35	35	41,3	54,2	48,03	25,1	12,18	14,78	48	55	12,5	32	0,180
03155-50	50	58,4	75,2	67,03	31,1	15,43	18,67	67	76	15,75	45	0,410

Receiver Bushings

Model B (screwed in at front)



Material:
Tempered steel

Surface finish:
Heat-treated and black oxide finish.

Sample order:
nlm 03156-13

Note:
Assembly screws are included.

Dimension „S“ also corresponds to min. threaded depth of blind hole.

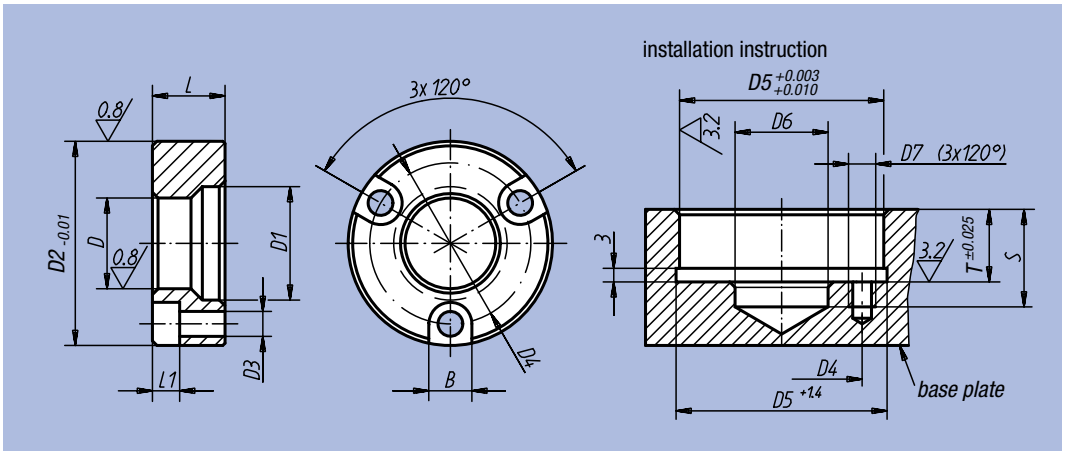

Order No.	D	D1	D2	D3	D4	L	L1	B	D5	D6	D7	T	Min. grid plate thickness S	kg
03156-13	13	17,3	34,99	4,4	25	11,56	4,5	7,6	35	13,5	M4	11,91	20	0,060
03156-16	16	20,7	36,99	4,4	29	11,56	4,5	7,6	37	21	M4	11,91	20	0,060
03156-20	20	24,8	44,99	5,4	35	15,82	6,0	9,5	45	21	M5	16,21	25	0,140
03156-25	25	30,4	54,99	6,4	42	19,94	7,0	11,0	55	25,5	M6	20,32	25	0,200
03156-30	30	36,2	59,99	6,4	48	21,77	7,0	11,0	60	30,5	M6	22,15	30	0,270
03156-35	35	41,3	69,99	8,4	56	22,61	9,0	14,0	70	40	M8	22,99	32	0,410
03156-50	50	58,4	91,99	10,4	75	31,12	11,0	17,0	92	55	M10	31,5	45	0,910

Clamping Plugs



Material:
Housing mild steel, tapered-head bolt hardened steel

Surface finish:
Tapered-head bolt hardened, black oxide finish.
Taper element case-hardened

Sample order:
nlm 03157-081420

Note:
The Clamping Plug is ideal for second machining of turned parts. The diameter D can be adapted to the diameter of the workpiece to be clamped by turning or milling.
Low construction - no clamps in the way.
Clamping movement with hexagon socket wrench or hydraulically.

* D min. = smallest admissible diameter to which "D" may be turned or milled

Installation:
Widen the Clamping Plug to about 0.1 mm (clamp travel) more than the diameter at rest. Machine to the internal diameter of the workpiece by turning or milling. The base can be centred in a hole or with locating pins as required.

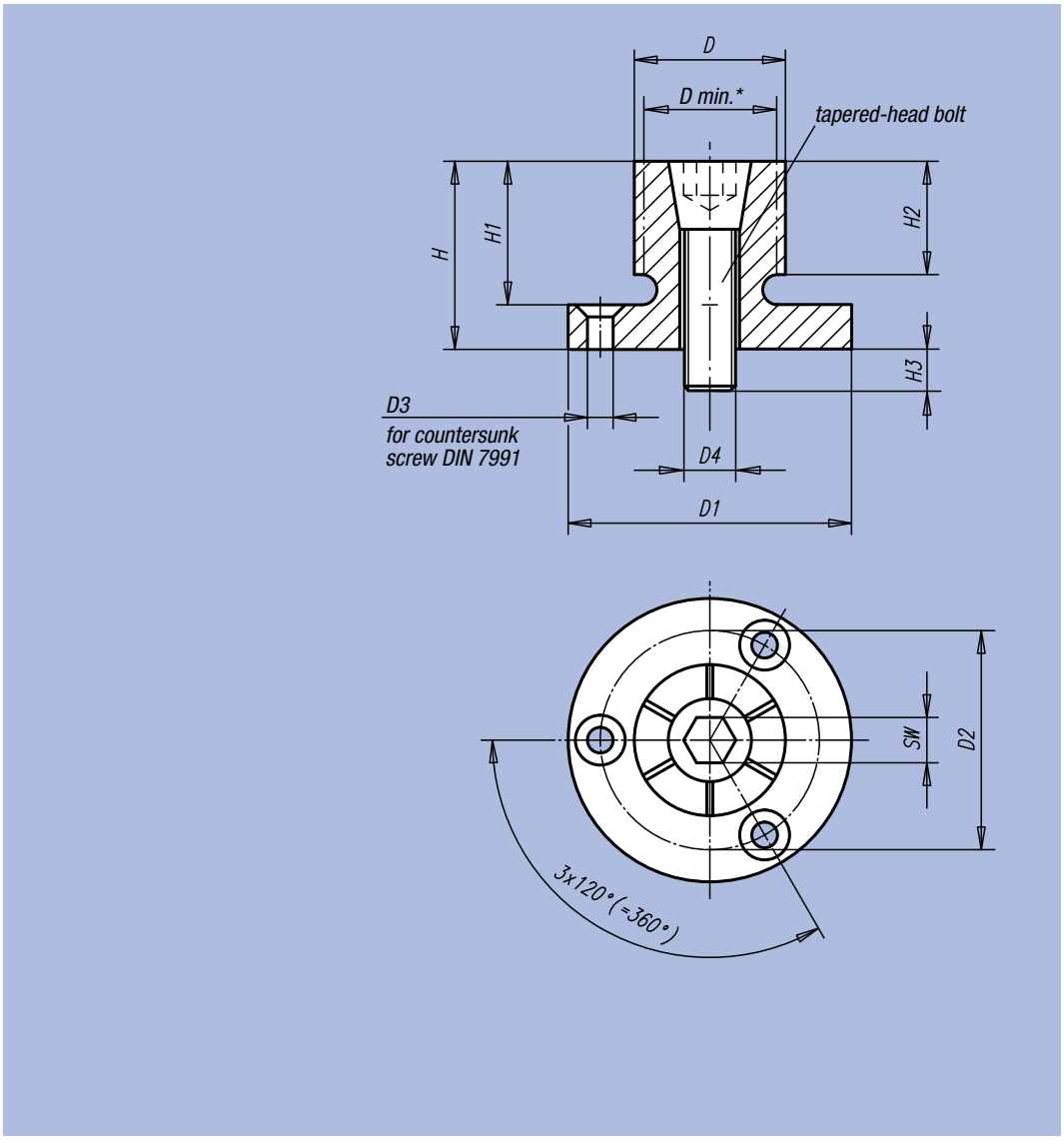

Order No.	D	D min.	D1	D2	D3 for countersunk screw	H	H1	H2	H3	Tightening torque max. Nm	Clamping force max. kN	kg	Tapered-head bolt D4	Tapered-head bolt SW
03157-020407	7,4	4,1	20 h9	13,7	M2	10,7	7,6	6,1	4,1	0,7	1,1	0,010	M 2	1,5
03157-040812	12,4	7,2	29,7 h9	21	M3	21,8	16	15	8	5	4,2	0,040	M 4	3
03157-061214	14,2	12,2	31,5 h9	23,1	M3	24,9	19	15	12	17	8,5	0,070	M 6	5
03157-081420	20	13,5	37,5 h9	29	M3	24,9	19	15	14	34	11,1	0,100	M 8	6
03157-062027	27	20	50 h8	39,4	M4	28,6	22,2	17,5	17	60	20	0,180	M 10	8
03157-102535	35,3	25,4	56 h8	45,5	M4	31,8	25,4	20,6	21	150	26,3	0,320	M 12	10
03157-123442	42	30	69,5 h8	55,9	M5	39,6	31,8	27	22	280	44,5	0,600	M 16	14
03157-123452	51	30	75,5 h8	63,9	M5	39,6	31,8	27	22	280	44,5	0,700	M 16	14
03157-163077	77	30	107,5 h8	92,5	M6	45,5	37,6	32,3	20	280	44,5	1,730	M 16	14
03157-1630103	103	30	132,9 h9	118	M6	46	38	32	20	280	44,5	2,860	M 16	14
03157-1630175	175	30	132,9 h9	118	M6	45,5	37,6	32,3	20	280	44,5	6,500	M 16	14

Clamping Plugs

with lateral clamping



Material:
Housing mild steel;
clamping screw in tempered steel

Surface finish:
Housing, black oxide finish. Clamping screw, heat-treated class 10.9, hardened and PTFE coated.

Sample order:
nlm 03157-118029

Note:
The Clamping Plug is due to the lateral clamping ideal for second machining of turned and milled parts with blind hole. The diameter D can be adapted to the diameter of the workpiece to be clamped by turning or milling.

The clamping movement is carried out manually with hexagon socket wrench.

* D min. = smallest admissible diameter to which "D" may be turned or milled

Installation:
Widen the clamping plug to about 0.1 mm (clamp travel) more than the diameter at rest. The clamping plug can now be lathed and milled to the requisite diameter. An interlocking ring is included for machining.
The base can be centred in a locating hole or with locating pins as required. Model A is delivered with 6 fastening screws.

Form A
for machining centres,
drilling and milling machines

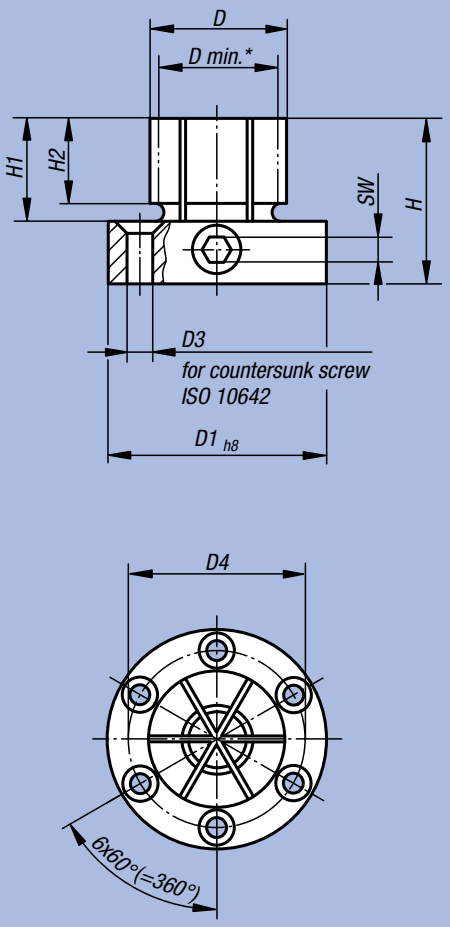

Form B
with clamping pivot
for turning machines

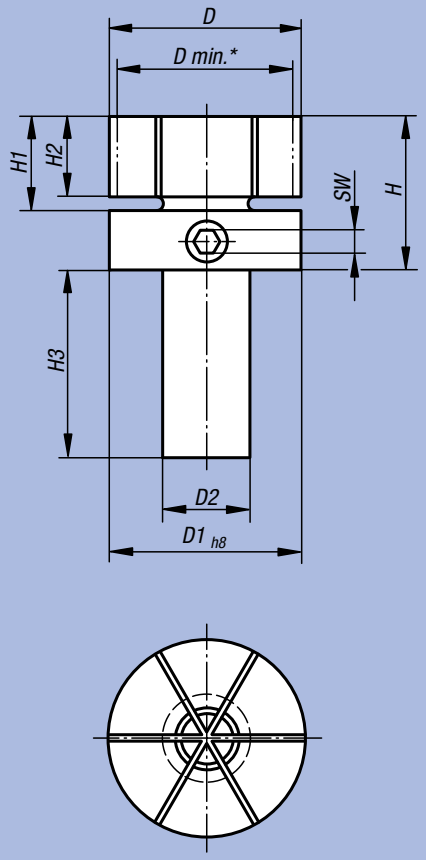



Order No.	Form	D	D min.	D1	D2	D3 for countersunk screw	D4	H	H1	H2	H3	SW	Tightening torque max. Nm	Clamping force max. kN	kg
03157-118029	A	28,7	17,8	50	-	M4	39,4	41	22	17,5	-	6	66	20	0,425
03157-218053	B	53,3	18	53,3	25	-	-	44,4	25	21	45	6	66	20	0,810

Centring Tension Jack

with and without protection



Material:
Body 1.2842.
Balls and Hexagonal 1.4112.
Tension Spring 1.4310.

Surface finish:
Body hardened and black oxide finished. Balls and hexagonal hardened and ground

Sample order:
nlm 03158-101203

Note:
Form A:
with ball suitable for tensioning in holes, where slight impressions are acceptable.
Form B:
with hexagon for surface-sensitive holes.

Technical data:
Repeat accuracy ±0.025
Truth of running ±0.05

Application:
To position and self-centre round holes from inside to outside.

Benefits:
- Precise self-centring.
- No-warp tensioning.
- Large travels.
- Low height.

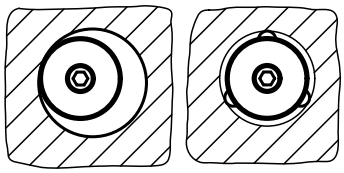

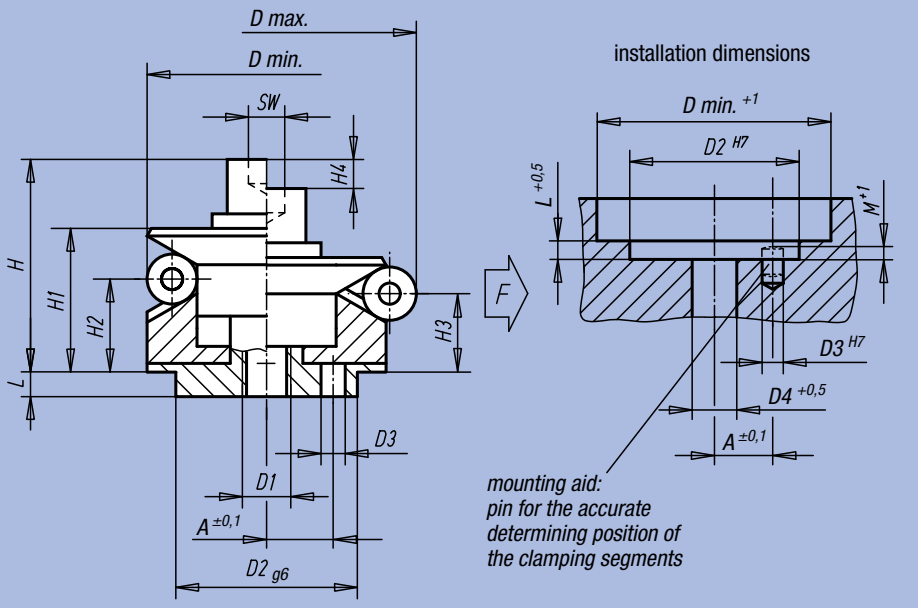

Form A
without potection:
point of contact

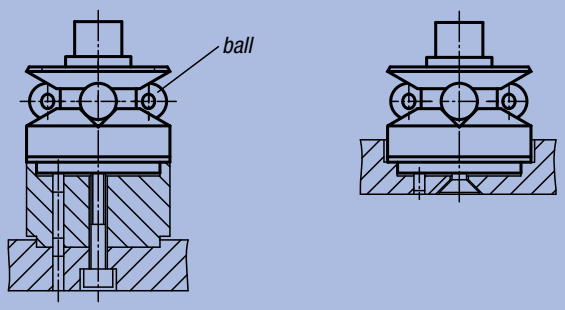

Form B
with protection:
blunt line contact

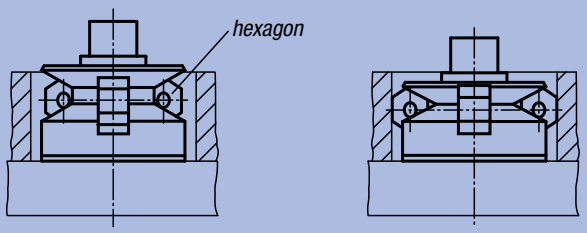

Order No. Form A	Order No. Form B	A	D min.	D max.	D1	D2	D3	D4	H	H1	H2	H3	H4	L	M	SW	Ball-Ø	hexagon	Number of balls/ hexagon	F kN	kg
03158-101203	-	3,5	11,7	14,2	M3	10	1,5	3,3	15,9	12	9,2	8,6	1,5	3,5	2,5	2,5	2,5	-	3	0,5	0,018
03158-101504	03158-201504	4,5	14,5	18,5	M4	12	2	4,3	19,6	14,1	9,1	7,9	2,3	5,5	3,5	3	4	4	3	3,5	0,020
03158-101905	03158-201905	5,5	18,5	22,5	M5	15	2,5	5,3	23,6	16,6	11,6	10,4	2,3	7,5	3	4	4	4	3	4,5	0,039
03158-102306	03158-202306	7	22,5	26,5	M6	15	3	6,4	29,1	20,1	15,1	13,9	2,3	6	4	5	4	4	3	5	0,060
03158-102706	03158-202706	7	26,5	30,5	M6	20	3	6,4	29,1	20,1	15,1	13,9	2,3	6	4,5	5	4	4	3	5	0,086
03158-103106	03158-203106	9	30,5	38,5	M6	25	4	6,4	33,2	24,2	15,2	12,8	4,6	7	4,5	5	8	8	3	5	0,125
03158-103908	03158-203908	11	38,5	46,5	M8	30	4	8,4	38,6	27,1	18,1	15,7	4,6	7,5	4,5	6	8	8	6	6,5	0,233
03158-104708	03158-204708	11	46,5	54,5	M8	30	4	8,4	38,6	27,1	18,1	15,7	4,6	7,5	4,5	6	8	8	6	6,5	0,323
03158-105510	03158-205510	15	54,5	70,5	M10	45	5	10,5	54,7	40,7	23,7	19	9,3	9	5,5	8	16	16	6	8	0,653
03158-107112	03158-207112	17	70,5	86,5	M12	60	5	13	62,1	45,6	28,3	23,6	9,3	10	5,5	10	16	16	6	10	1,271
03158-108712	03158-208712	17	86,5	102,5	M12	60	5	13	62,1	45,6	28,3	23,6	9,3	10	5,5	10	16	16	6	10	1,783

Centring Tension Jack

with and without protection



Material:
Body 1.2842.
Balls and Hexagonal 1.4112.
Tension Spring 1.4310.

Surface finish:
Body hardened and black oxide finished; balls and hexagonal hardened and ground

Sample order:
nlm 03158-0101203

Note:
Form A:
with ball suitable for tensioning in holes, where slight impressions are acceptable.
Form B:
with hexagon for surface-sensitive holes.

Technical data:
Repeat accuracy ±0.025
Truth of running ±0.05

Application:
For centrical positioning and tightening in blind holes. Operated from below, either manual or automated via pneumatic or hydraulic systems.

Benefits:
- Precise self-centring.
- No-warp tensioning.
- Large travels.
- Low height.
- Side clamping effect (downward pressure).

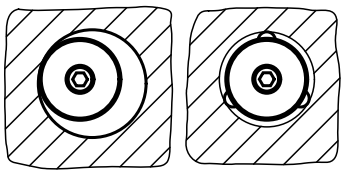

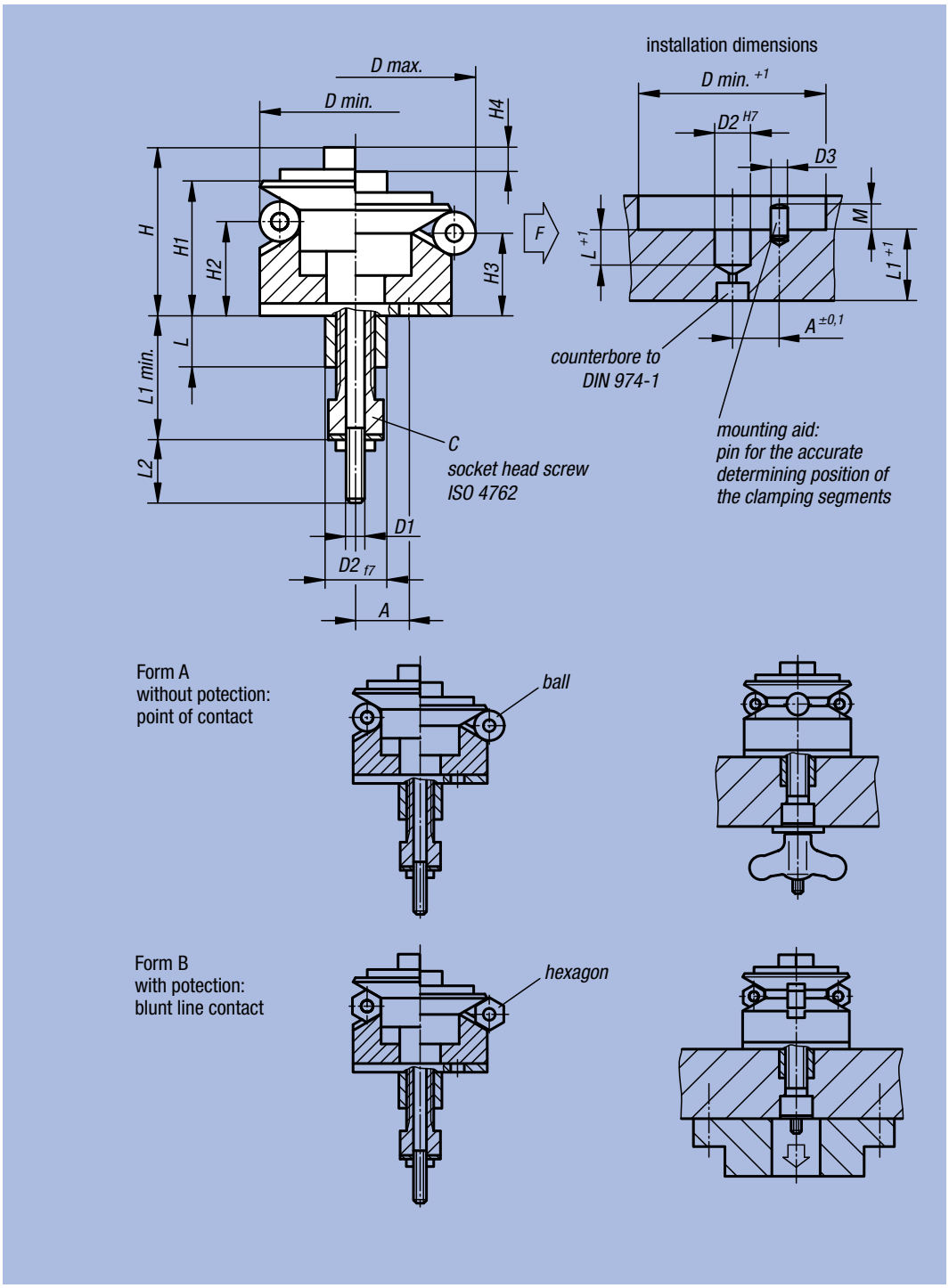

Order No. Form A	Order No. Form B	A	D min.	D max.	D1	D2	D3	H	H1	H2	H3	H4	L	L1 min.	L2	M	Ball-Ø	hexagon	Number of balls/ hexagon	C (DIN 912)	F kN	kg
03158-0101203	-	5,2	11,7	14,2	M3	8	1,5	15	11,9	9,2	8,6	1,5	7,5	19,5	10	1	2,5	-	3	M6x10	2	0,009
03158-0101503	03158-0201503	6	14,5	18,5	M3	8	2	17	14,1	9,1	7,9	2,3	7,5	19,5	10	1,5	4	4	3	M6x10	2	0,022
03158-0101904	03158-0201904	7,8	18,5	22,5	M4	12	2,5	20,6	16,6	11,6	10,4	2,3	11,5	28	16	1,5	4	4	3	M8x16	3,5	0,054
03158-0102305	03158-0202305	9,4	22,5	26,5	M5	15	3	27,1	20,1	15,1	13,9	2,3	11,5	30	14	2	4	4	3	M10x16	6	0,064
03158-0102705	03158-0202705	10,5	26,5	30,5	M5	15	3	27,1	20,1	15,1	13,9	2,3	11,5	30	14	2	4	4	3	M10x16	6	0,098
03158-0103106	03158-0203106	12,5	30,5	38,5	M6	20	4	32,7	24,2	15,2	12,8	4,6	15,5	36	16	2	8	8	3	M12x20	8,5	0,139
03158-0103906	03158-0203906	12,5	38,5	46,5	M6	20	4	35,6	27,1	18,1	15,7	4,6	15,5	36	16	2,5	8	8	6	M12x20	8,5	0,248
03158-0104706	03158-0204706	12,5	46,5	54,5	M6	20	4	35,6	27,1	18,1	15,7	4,6	15,5	36	16	2,5	8	8	6	M12x20	8,5	0,338
03158-0105508	03158-0205508	20	54,5	70,5	M8	30	5	50,2	40,7	23,7	19	9,3	16,5	43	16	2,5	16	16	6	M16x20	16	0,660
03158-0107108	03158-0207108	25	70,5	86,5	M8	40	5	55,1	45,6	28,3	23,6	9,3	16,5	43	16	2,5	16	16	6	M16x20	16	1,252
03158-0108708	03158-0208708	36,5	86,5	102,5	M8	60	5	55,1	45,6	28,3	23,6	9,3	16,5	43	16	2,5	16	16	6	M16x20	16	1,765

Ball Tensioner

with moving ball



Material:
Set screw and ball made of steel.

Surface finish:
Set screw, black oxide finish.
Ball hardened.

Sample order:
nlm 03159-05010

Note:
Bearing-mount, align and tension cylindrical and flat parts, dies, moulds, axes, and shafts, etc., with a movable ball.

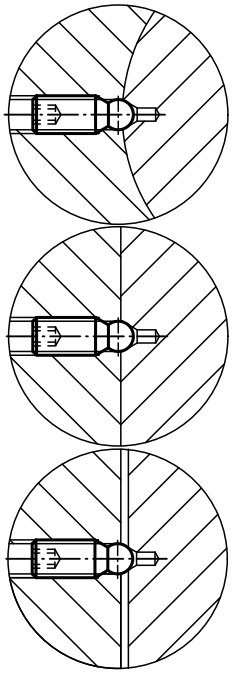

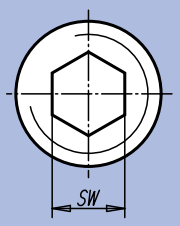

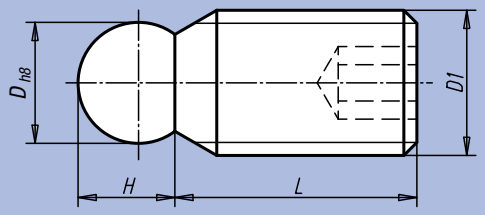

installation dimensions for flat parts

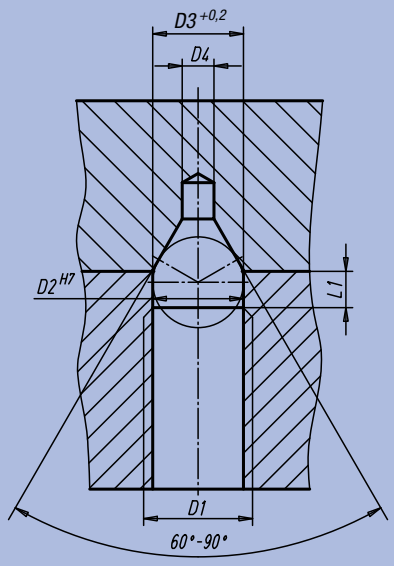

installation dimensions for cylindrical parts

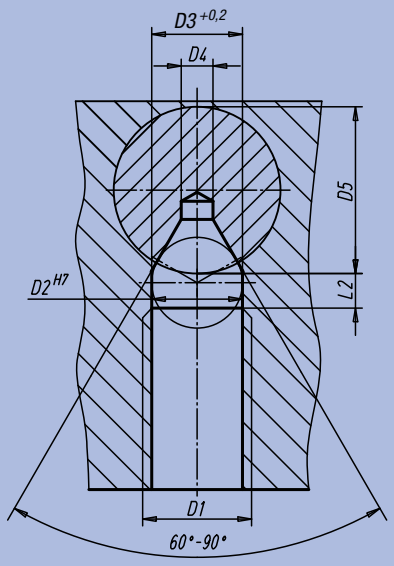

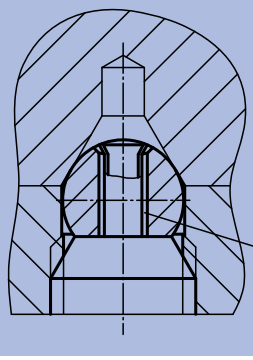

The screw-in depth is determing firstly, by the fact that the full diameter of the ball has to sit in the guide hole, which, secondly is at a 60° or 90° tangent to the fall of the component.
As the ball is kept movable on the threaded pin, there is no risk of warping.

Clearance
for non-warping positioning and tightening

Order No.	D	D1	D2	D3	D4 max.	D5 min.	H	L	L1	L2	SW	kg
03159-05010	4	M 5	4	4	1,6	10	3,3	10	1,7	1,5	2,5	0,001
03159-08014	6	M 8	6	6	2	14	5	14	2,5	2	4	0,004
03159-12020	10	M12	10	10	3,5	20	8	20	4	3	6	0,014

Centring V



Material:
Tempered steel 1.1181
Surface finish:
Black oxide finish.
Sample order:
nlm 03160-02

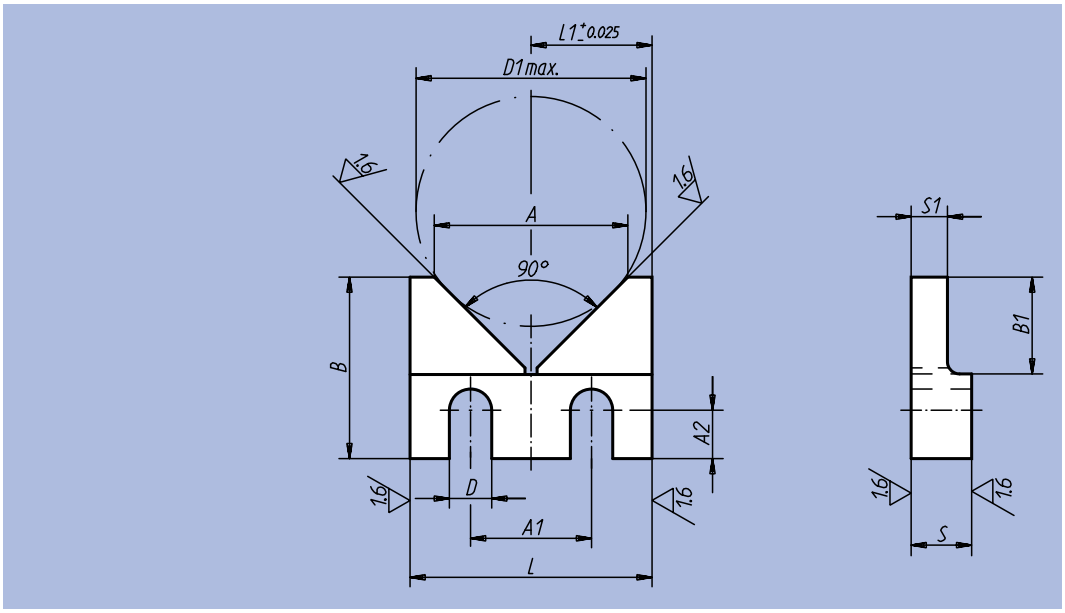

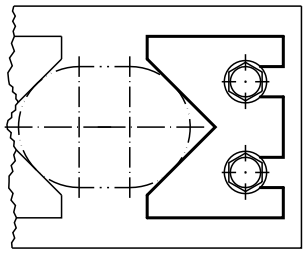

Order No.	L	L1	B	B1	S	S1	D	D1 max.	A	A1	A2	kg
03160-01	40	20	30	16	10	6	7	38	32	20	8	0,055
03160-02	50	25	40	20	12	8	9	46	40	25	12	0,100
03160-03	63	31,5	50	25	16	10	11	58	50	32	16	0,162

Notes:

Centring clamps



Material:
Body in steel;
bushes in tempered steel

Surface finish:
Black oxide finish

Sample order:
nlm 03165-0615

Note:
The centring clamp allows centring and clamping of a workpiece in the drillhole.
The centring clamp has a wide range of movement. The product range covers a clamping range of Ø 12 up to Ø 30 mm. In order to increase the precision of the centring, the centring clamp can be fixed in a drillhole with a centring pin (D2).
Centring clamps with internal thread are suitable for matrixsystem M6 (see application).

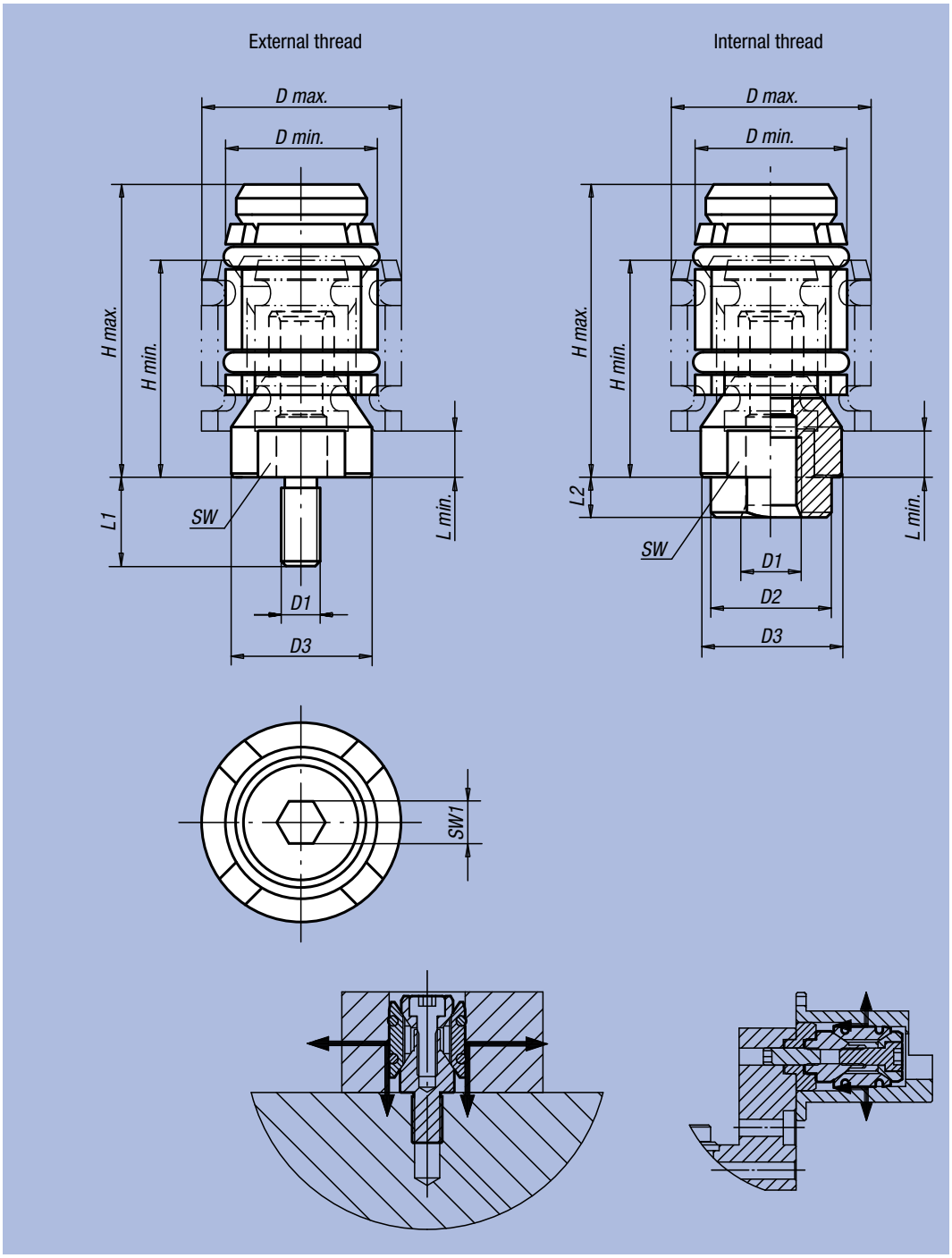

Order No.	D1	L1	L2	D min.	D max.	D2	D3	H min.	H max.	L min.	SW	SW1	kg
03165-0615	M6	-	4	12	15	12	11,4	22	27,5	4,8	9	2,5	0,02
03165-0619	M6	-	4	15	19	12	14	24,5	32	4,8	11	3	0,03
03165-0624	M6	-	4	19	24	12	17,8	26	35	4,5	15	4	0,06
03165-0630	M6	-	4	24	30	12	23,5	32	44,5	7	19	5	0,12
03165-061215	M6	12	-	12	15	-	11,4	22	27,5	4,8	9	2,5	0,05
03165-061219	M6	12	-	15	19	-	14	24,5	32	4,8	11	3	0,10
03165-081624	M8	16	-	19	24	-	17,8	26	35	4,5	15	4	0,15
03165-081630	M8	16	-	24	30	-	23,5	32	44,5	7	19	5	0,40

Sliding V



Material:
Tempered steel 1.1181
Surface finish:
Black oxide finish.
Sample order:
nlm 03180-03
Note:
Pad type screws 07120 or 06150 may

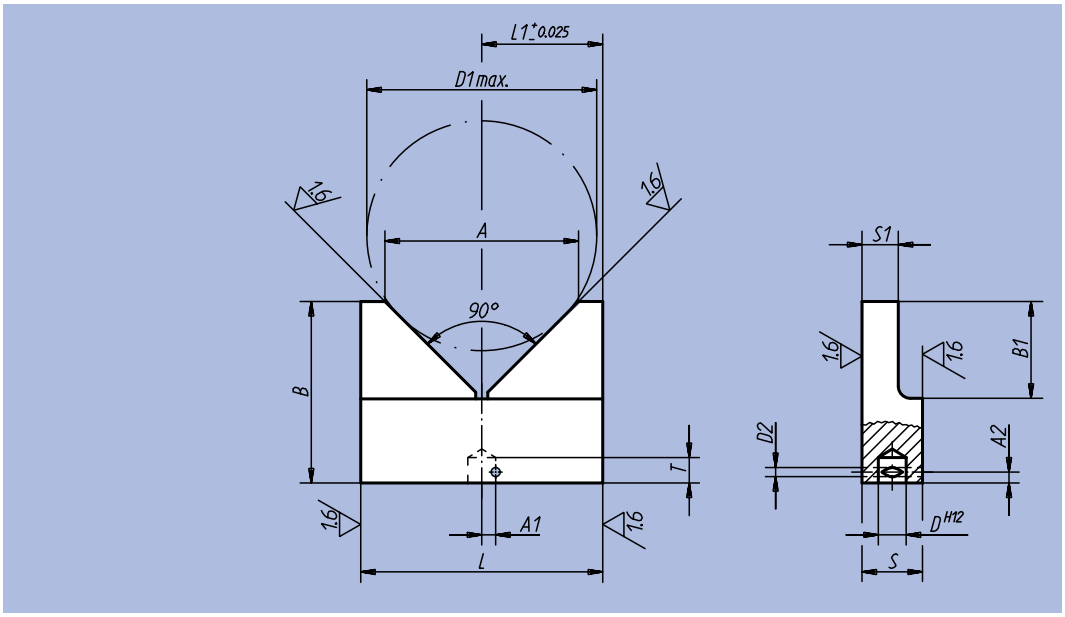

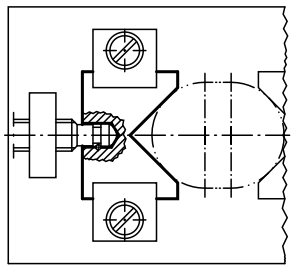

Order No.	L	L1	B	B1	S	S1	D	D1 max.	D2	A	A1	A2	T	kg
03180-01	40	20	30	16	10	6	4,6	38	1,5	32	2,6	1,8	4,2	0,060
03180-02	50	25	40	20	12	8	6,1	46	1,5	40	3,7	2	5	0,110
03180-03	63	31,5	50	25	16	10	8,1	58	2	50	4,7	2,7	7	0,172

Notes:

Precision Locking Bolts

with tapered support



Material:
Steel, grip ball thermoplastic

Surface finish:
Hardened and ground,
grip ball anthracite grey

Sample order:
nlm 03182-020

Note:
The Locking Bolts with sleeves are a perfect combination for rapid positioning and fixing.
The precise finish of both the locking bolt and the sleeve guarantees high repeating accuracy when assembling two elements.

Technical Information see Assembly and Installation Instructions.

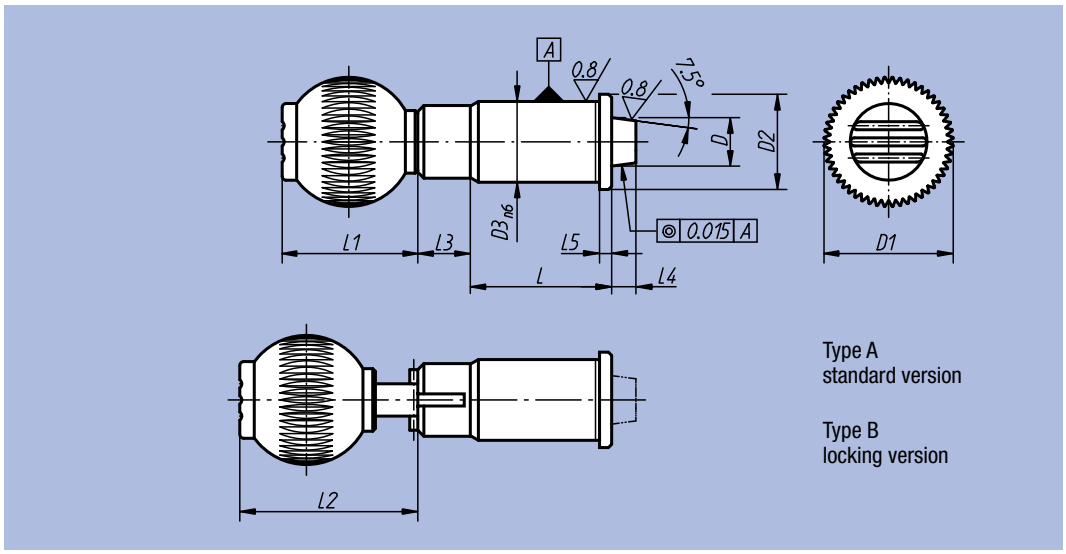

Type A
standard version

Type B
locking version

Order No. Type A	Order No. Type B	D	D1	D2	D3	L	L1	L2	L3	L4 min.	L5	Spring force initial pressure F1 approx. N	Spring force final pressure F2 approx. N	Internal thread Grip Ball	kg
03182-010	03182-110	10	25	19	16	31	25	32,5	13	6	2,5	19	29	M6	0,067
03182-012	03182-112	12	32	23	20	35	33	40,5	13	6	3	22	35	M8	0,127
03182-016	03182-116	16	40	28	25	42	41,5	49	13	6	3	30	50	M10	0,221
03182-020	03182-120	20	40	33	30	50	41,5	49	13	6	3	46	63	M10	0,350
03182-025	03182-125	25	50	42	38	60	51	58,5	13	6	3	39	73	M10	0,655

Tapered Sleeves



Material:
Steel

Surface finish:
Hardened and ground

Sample order:
nlm 03184-20

Note:
Sleeves suitable for Precision Locking Bolts 03182.

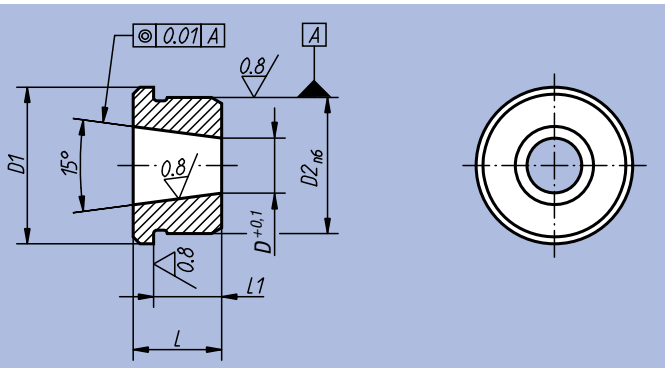

Order No.	D	D1	D2	L	L1	kg
03184-10	7,1	19	16	11	8,5	0,013
03184-12	8,28	23	20	13	10	0,021
03184-16	11,52	28	25	17	14	0,048
03184-20	15,49	33	30	16	13	0,056
03184-25	19,7	42	38	19	16	0,115

Precision Locking Bolts

with cylindrical support



Material:
Steel, grip ball thermoplastic

Surface finish:
Hardened and ground, grip ball anthracite grey

Sample order:
nlm 03186-020

Note:
The Locking Bolts with sleeves are a perfect combination for rapid positioning and fixing.
The precise finish of both the locking bolt and the sleeve guarantees high repeating accuracy when assembling two elements.

Technical Information see Assembly and Installation Instructions.

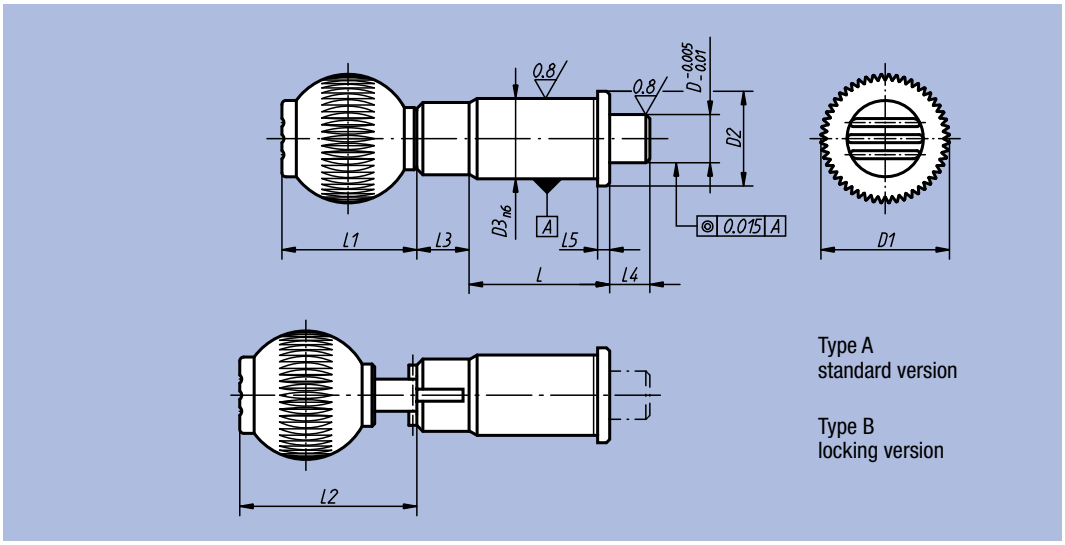

Order No. Type A	Order No. Type B	D	D1	D2	D3	L	L1	L2	L3	L4 min.	L5	Spring force initial pressure F1 approx. N	Spring force final pressure F2 approx. N	Internal thread Grip Ball	kg
03186-010	03186-110	10	25	19	16	31	25	36,5	13	10	2,5	15	30	M6	0,067
03186-012	03186-112	12	32	23	20	35	33	44,5	13	10	3	2215	35	M8	0,127
03186-016	03186-116	16	40	28	25	42	41,5	53	13	10	3	20	50	M10	0,221
03186-020	03186-120	20	40	33	30	50	41,5	53	13	10	3	36	63	M10	0,350
03186-025	03186-125	25	50	42	38	60	51	62,5	13	10	3	20	73	M10	0,655

Cylindrical Sleeves



Material:
Steel

Surface finish:
Hardened and ground

Sample order:
nlm 03188-20

Note:
Sleeves suitable for Precision Locking Bolts 03186.

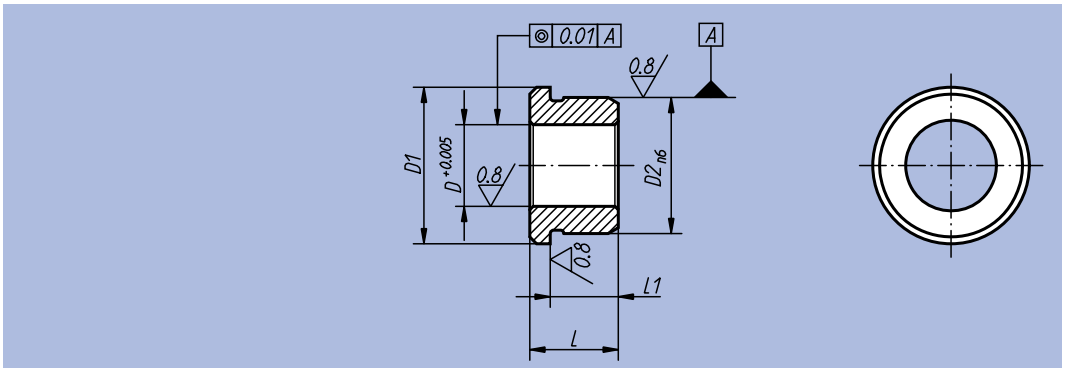

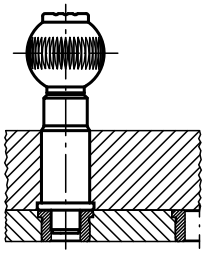

Order No.	D	D1	D2	L	L1	kg
03188-10	10	19	16	11	8,5	0,012
03188-12	12	23	20	13	10	0,015
03188-16	16	28	25	17	14	0,041
03188-20	20	33	30	16	13	0,045
03188-25	25	42	38	19	16	0,100

Assembly and Installation Instructions for Precision Locking Bolts

Assembly Instructions:

1. Fit tapered or cylindrical sleeve (No. 1) into component 1.
2. Fit sleeve (No. 2) into component 2.
3. Determine the mounting length (actual dimension). Mounting length = A + stroke + length of No. 2. Note the graticule of 0.2 mm with models with tapered support.
4. Glue threaded bolt (No. 3) and centering pin (No. 4) together grease-free with anaerobic adhesive.
   We recommend LOCTITE 638.
5. Screw centering pin with nut (No. 4) and handle into the mounted sleeve (No. 2). If necessary glue together grease-free with anaerobic adhesive.
6. Check whether the product is operational. Adhere to the release stroke in the catalogue with locking device versions.

Note:
The Precision Locking Bolt is only ready for operation after the stated adhesive hardening time. When gluing the components, ensure that no adhesive enters into contact with movable parts.

Precision Locking Bolts with tapered support

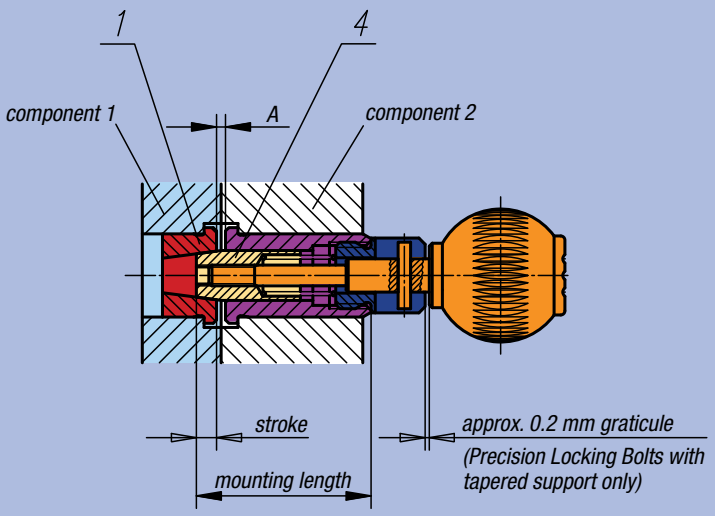

Precision Locking Bolts with cylindrical support

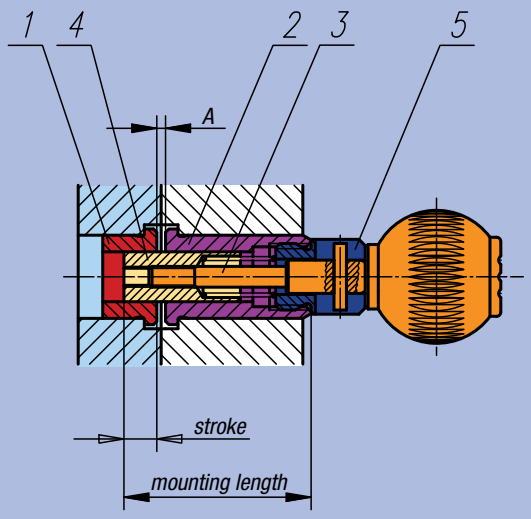



Extendable Tensioning Pins

hydraulic



Material:
Bolt in tempered steel.
Bush in brass.

Surface finish:
Heat-treated class 12.9, black oxide finish.
Bush natural finish.

Sample order:
nlm 03189-12030

Note:
Extendable tensioning pins are ideally suited for the alignment, centring and clamping of components and jigs. They produce a positive locking adjustment in the radial direction and a friction locking fastening in the axial direction. The principle of hydraulic tensioning enables the µm-exact positioning of components <0.003 mm. Extendable tensioning pins are maintenance-free.

Installation:
The locating hole must exhibit at least H7 quality and have a minimum depth of L+2. The assembly position is arbitrary. The extendable tensioning pin must rest in the part at full L1 length. The screw head is tightened to rest on the non-ferrous metal case (pre-centring). Then as the case may require, the extendable tensioning pin is tightened with a torque spanner up to the maximal moment of force.
A detailed operating instruction is included.

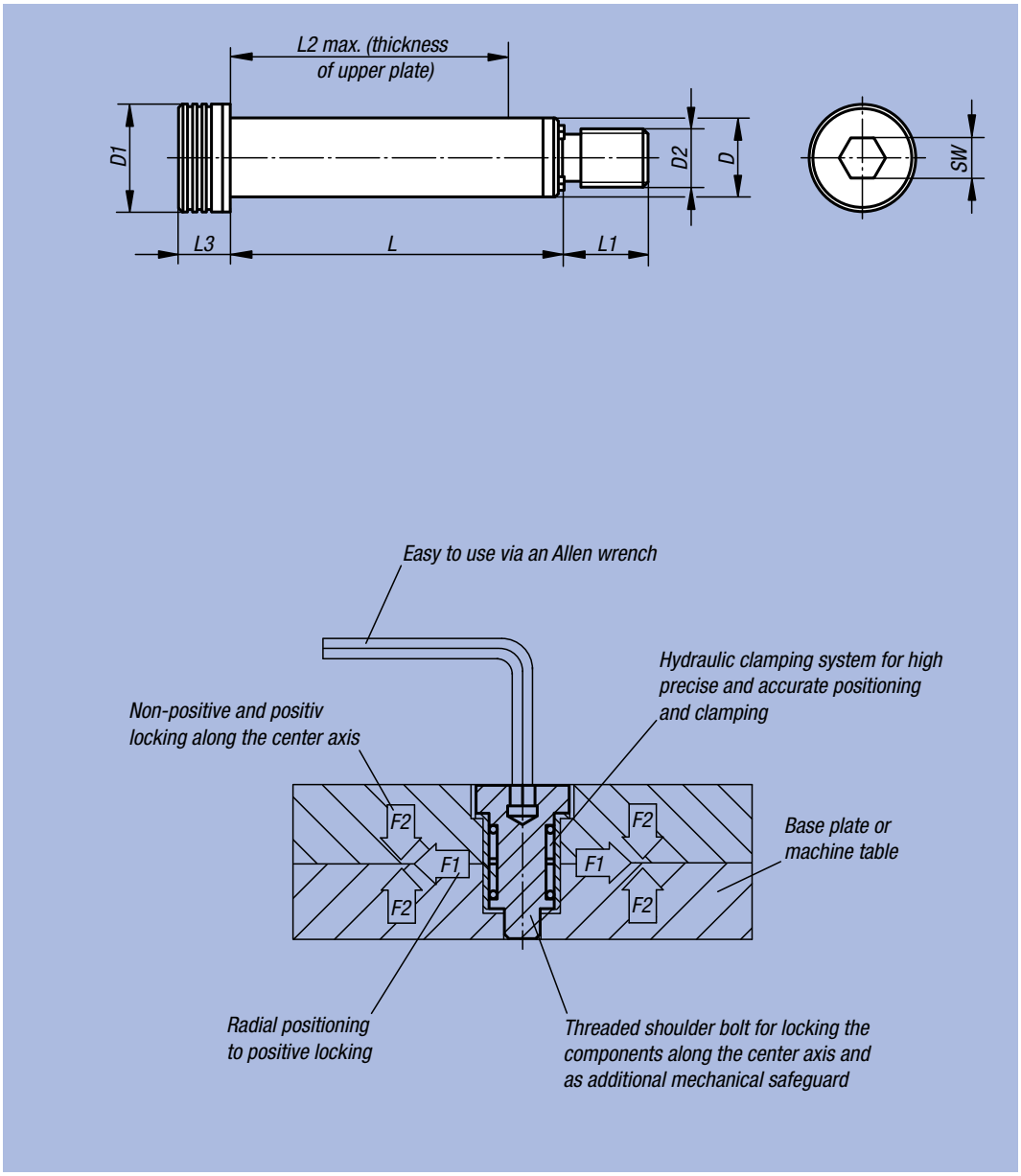

Order No.	D	D1	D2	L	L1	L2 max.	L3	SW	Tightening torque max. Nm	F1 (N)	F2 (N)	kg
03189-12030	12	18	M10	30	16	20	9	6	35	1500	5000	0,051
03189-12040	12	18	M10	40	16	30	9	6	35	1500	5000	0,058
03189-12060	12	18	M10	60	16	50	9	6	35	1500	5000	0,088
03189-16030	16	24	M12	30	18	20	11	8	70	3000	9000	0,090
03189-16040	16	24	M12	40	18	30	11	8	70	3000	9000	0,104
03189-16060	16	24	M12	60	18	50	11	8	70	3000	9000	0,130
03189-16070	16	24	M12	70	18	60	11	8	70	3000	9000	0,143

Locking and Clamp Grips



Material, surface finish:
Anthracite grey thermoplastic, locking pin and threaded bolt in steel 5.8, black oxide finish, locking pin hardened and ground

Sample order:
nlm 03190-11056
(grip cap colour traffic red)

Note:
Δ Add the desired grip cap colour here; no colour code is required with anthracite grey grip caps

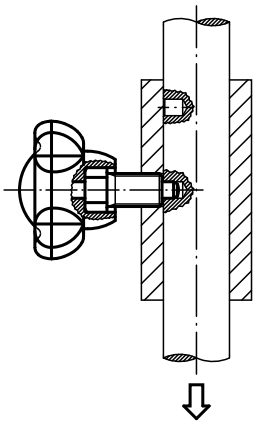

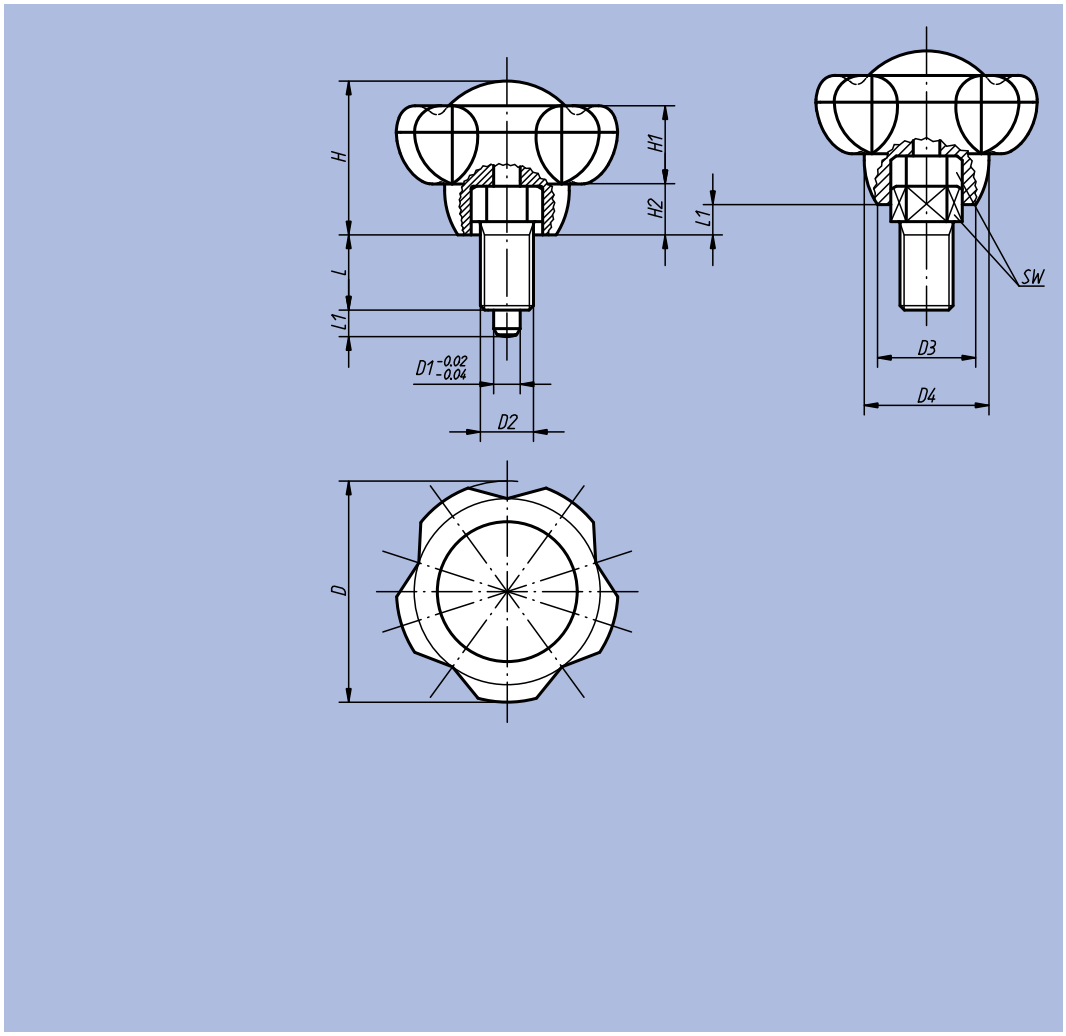

anthracite grey	light grey Δ = 5	traffic red Δ = 6	bright yellow Δ = 7
 RAL 7021	 RAL 7035	 RAL 3020	 RAL 1021

Order No.	Size	D	D1	D2	D3	D4	H	H1	H2	L	L1	SW	kg
03190-1105Δ	1	50	5	M10x1	22,2	28,2	34,8	17,8	11,5	13	5	13	0,033
03190-1206Δ	2	50	6	M12x1,5	22,2	28,2	34,8	17,8	11,5	17	6	14	0,040
03190-1308Δ	3	63	8	M16x1,5	28	35,5	44	22,5	14,5	22	8	19	0,097
03190-1410Δ	4	63	10	M20x1,5	28	35,5	44	22,5	14,5	24	10	22	0,135

Ball Locking Bolts

self-locking



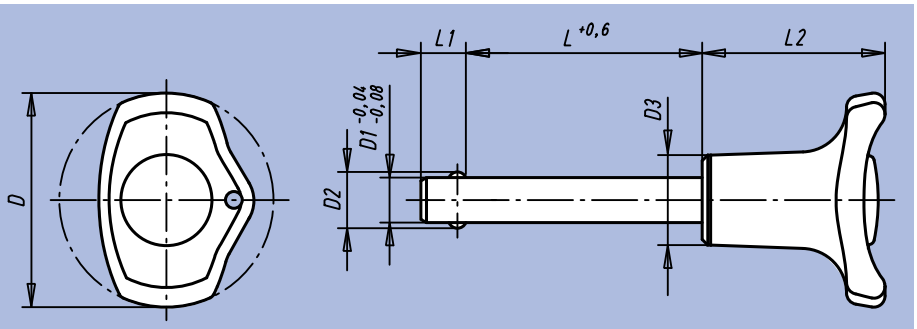

Material, surface finish:
Grip black thermoplastic,
push button red thermoplastic,
steel parts in stainless steel, natural finish

Sample order:
nlm 03193-3806050
(please also indicate dimension L,
e.g. 050 for L = 50 mm)

Note:
Ball Locking Bolts are used for fast and easy fixing and joining of parts and workpieces. The two balls can be disengaged by depressing the push button, so that the parts to be joined can be pegged. When the push button is released the balls lock the connection safely and permanently.

Shearing force double-edged
(F) = S · τ aB max.

Accessory:
Safety helix cable 03199-10200
Restraining Cable with eye 03199-....
Key Ring 03199-15/19/23

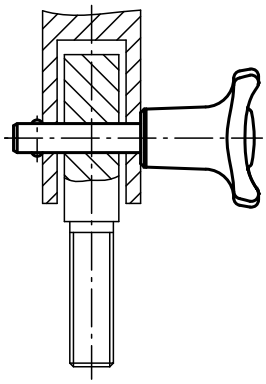

Order No.	D	D1	D2	D3	L	L1	L2	Receiving hole H11	Shearing force double-edged max. kN
03193-3805***	38	5	5,5	16	10 / 15 / 20 / 25 / 30	6	32,5	5	15
03193-3806***	38	6	6,85	16	10 / 15 / 20 / 25 / 30 / 35 / 40 / 45 / 50	7	32,5	6	22
03193-3808***	38	8	9,5	16	20 / 25 / 30 / 35 / 40 / 45 / 50	8	32,5	8	38
03193-4710***	47	10	12	23	20 / 25 / 30 / 35 / 40 / 45 / 50 / 60	9	40	10	60
03193-4712***	47	12	14,5	23	25 / 30 / 35 / 40 / 45 / 50 / 60 / 70 / 80	10	40	12	86
03193-4716***	47	16	19	23	30 / 35 / 40 / 45 / 50 / 60 / 70 / 80	13	40	16	153

Ball Locking Bolts in stainless steel

self-locking



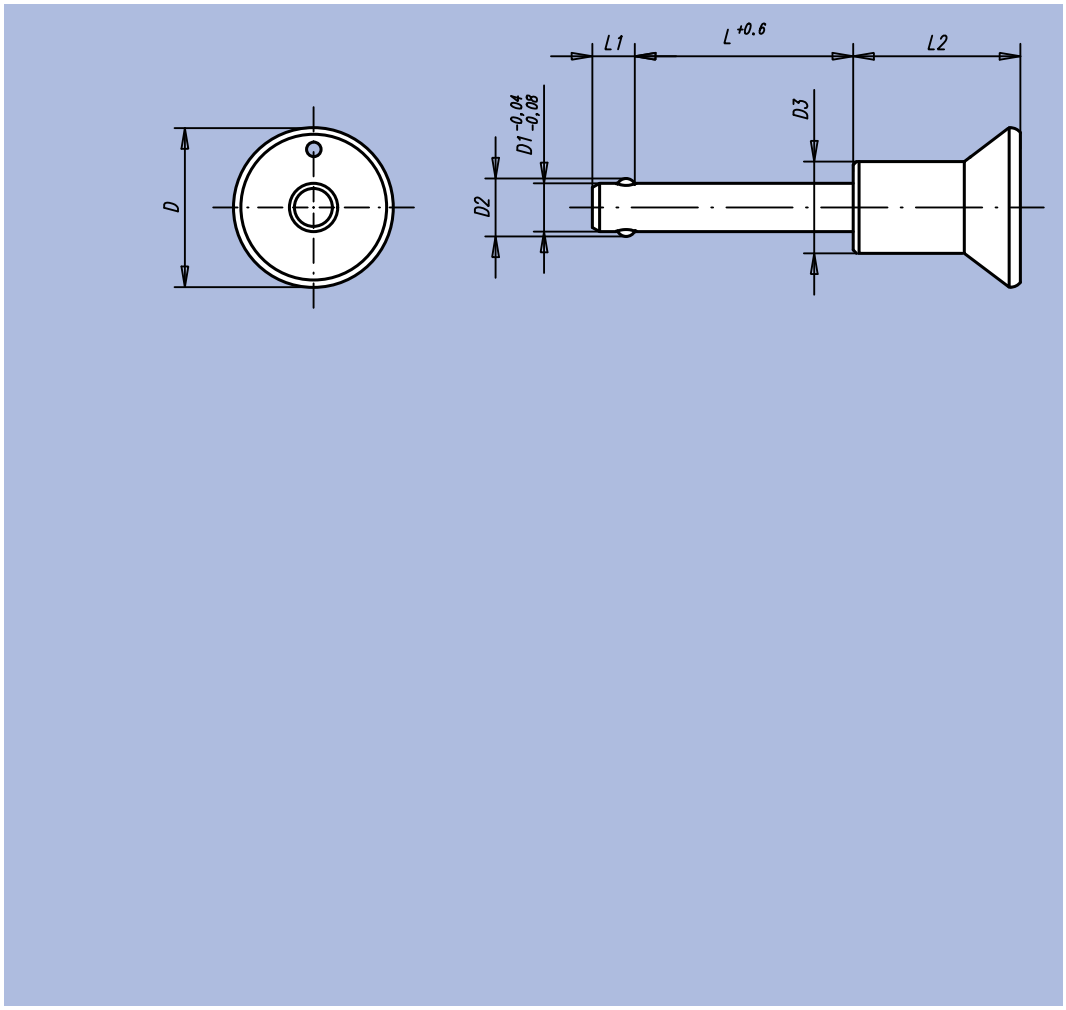

Material, surface finish:
Steel parts in stainless steel, natural finish

Sample order:
nlm 03194-3110030
(please also indicate dimension L, e.g. 030 for L = 30 mm)

Note:
Ball Locking Bolts are used for fast and easy fixing and joining of parts and workpieces. The two balls can be disengaged by depressing the push button, so that the parts to be joined can be pegged. When the push button is released the balls lock the connection safely and permanently. Corrosion resistant. Fixing option forrestraining cable. Temperature range of application max. +250 °C.

Shearing force double-edged
(F) = S · τ aB max.

Accessory:
Safety helix cable 03199-10200
Restraining Cable with eye 03199-....
Key Ring 03199-15/19/23

Order No.	D	D1	D2	D3	L	L1	L2	Receiving hole H11	Shearing force double-edged max. kN
03194-2305***	25	5	5,5	14	10 / 15 / 20 / 25 / 30	6	26,5	5	15
03194-2306***	25	6	6,85	14	10 / 15 / 20 / 25 / 30 / 35 / 40 / 45 / 50	7	26,5	6	22
03194-2308***	25	8	9,5	14	20 / 25 / 30 / 35 / 40 / 45 / 50	8	26,5	8	38
03194-3110***	33	10	12	19	20 / 25 / 30 / 35 / 40 / 45 / 50 / 60	9	34,6	10	60
03194-3112***	33	12	14,5	19	25 / 30 / 35 / 40 / 45 / 50 / 60 / 70 / 80	10	34,6	12	86
03194-3116***	33	16	19	20	30 / 35 / 40 / 45 / 50 / 60 / 70 / 80	13,3	34,6	16	153

Locking Pins



Material, surface finish:
Grip black thermoplastic, steel parts in stainless steel, natural finish

Sample order:
nlm 03195-2508020
(please also indicate dimension L, e.g. 020 for L = 20 mm)

Note:
Locking Pins are used for fast and easy fixing and joining of parts and workpieces.

Shearing force double-edged
(F) = S · τ aB max.

Accessory:
Safety helix cable 03199-10200
Restraining Cable with eye 03199-....
Key Ring 03199-15/19/23

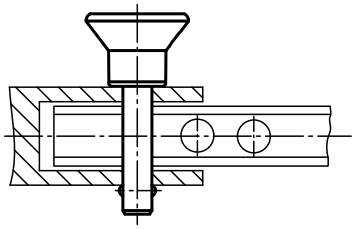

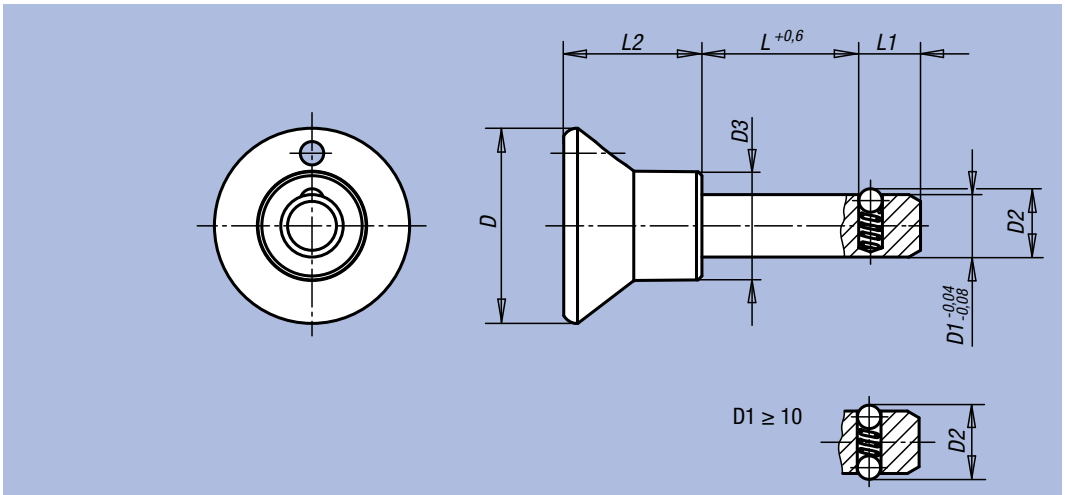

Order No.	Size	D	D1	D2	D3	L	L1	L2	Receiving hole H11	Shearing force double-edged max. kN
03195-2506***	1	25	6	6,5	14	10 / 15 / 20 / 25 / 30 / 40 / 50	7	17,7	6	22
03195-2508***	2	25	8	8,75	14	15 / 20 / 25 / 30 / 40 / 50	8	17,7	8	38
03195-3310***	3	33	10	12	19	15 / 20 / 25 / 30 / 40 / 50	9	24	10	60
03195-3312***	4	33	12	14,5	19	20 / 30 / 40 / 50	10	24	12	86

Ball Locking Bolts with T-grip

self-locking



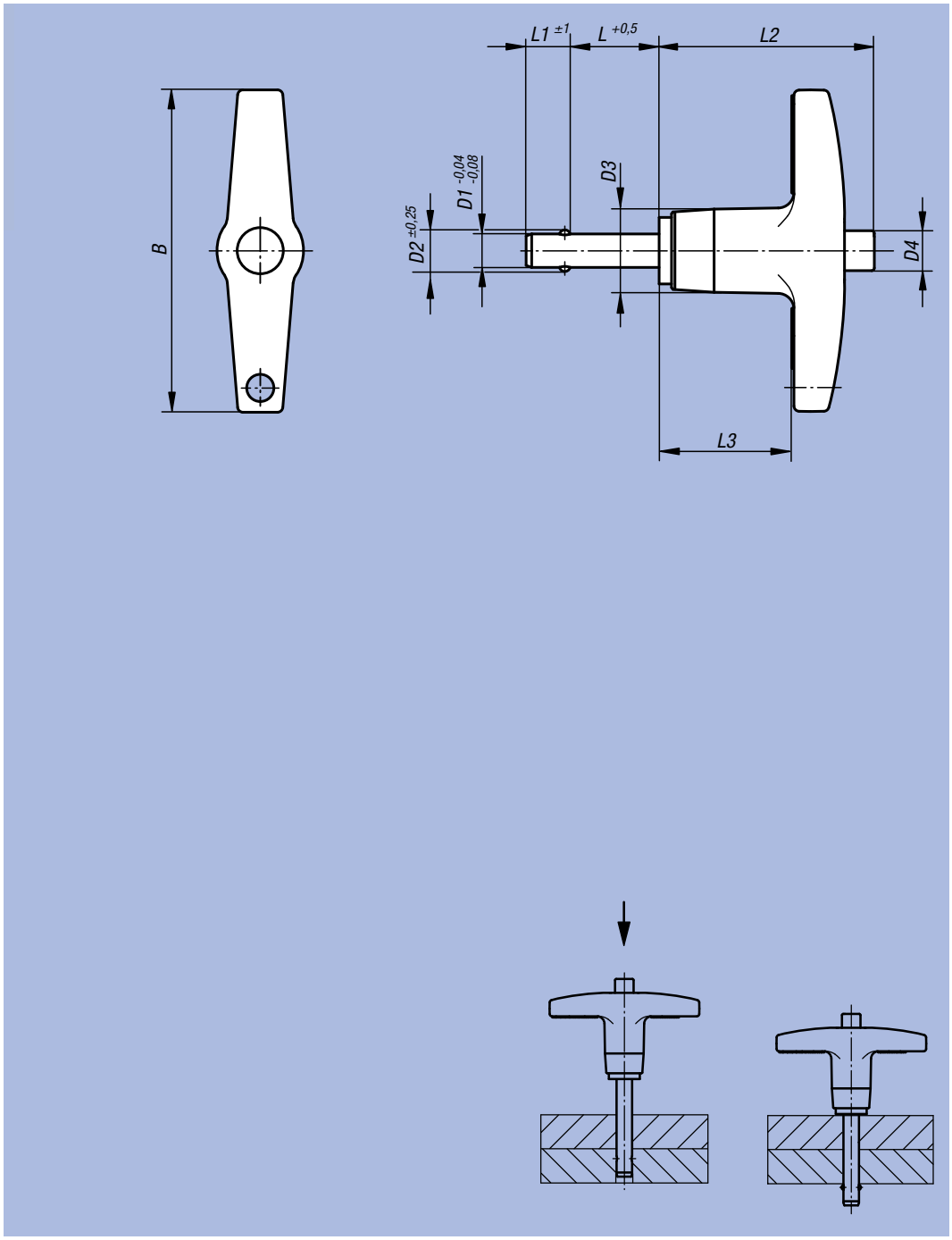

Material:
Bolt in stainless steel 1.4542;
grip aluminium die casting EN-AC 46000;
push button in aluminium EN-AW 2024 T4;
balls in stainless steel 1.4125;
compression spring in stainless steel

Surface finish:
Bolt, hardened min. 40 HRC and passivated; grip black anodised;
Push button blue anodised;
balls hardened 58 +4 HRC and passivated;
passivated compression spring

Sample order:
nlm 03196-24605030
(please also indicate dimension L, e.g. 030 for L = 30 mm)

Note:
Ball locking bolts are used for fast and easy fixing and joining of parts and workpieces. The two balls can be disengaged by depressing the push button, so that the parts to be joined can be pegged. When the push button is released the balls lock the connection safely and permanently. If required, the ball locking bolts can be provided with a holding rope.

The bolt made of high-strength, hardened stainless steel is suitable for extreme loads and provides a very high level of wear protection.

Shearing force double-edged
$(F) = S \cdot \tau$ aB max.

Accessory:
Safety helix cable 03199-10200
Restraining Cable with eye 03199-....
Key Ring 03199-15/19/23

Order No.	B	D1	D2	D3	D4	L	L1	L2	L3	Receiving hole H11	Shearing force double-edged max. kN
03196-24605***	46	5	5,54	11,9	5,8	10 / 15 / 20 / 25 / 30 / 35 / 40 / 50 / 60 / 70	6	30,7	19,3	5	24,40
03196-24606***	46	6	6,99	11,9	5,8	10 / 15 / 20 / 25 / 30 / 35 / 40 / 50 / 60 / 70 / 80	7	30,7	19,3	6	35,64
03196-24608***	46	8	9,42	11,9	5,8	10 / 15 / 20 / 25 / 30 / 35 / 40 / 50 / 60 / 70 / 80	8	30,7	19,3	8	63,80
03196-25110***	50,8	10	11,86	14,2	7,4	15 / 20 / 25 / 30 / 35 / 40 / 50 / 60 / 70 / 80 / 90 / 100	9	34,8	22,1	10	100,10
03196-25812***	57,2	12	14,45	18,3	10,7	20 / 25 / 30 / 35 / 40 / 50 / 60 / 70 / 80 / 90 / 100	10	40,6	25,4	12	144,06
03196-27816***	78	16	19	23,9	13,7	25 / 30 / 35 / 40 / 50 / 60 / 70 / 80 / 90 / 100	14	45	28,2	16	257,18

Ball Locking Bolts with L-grip

self-locking



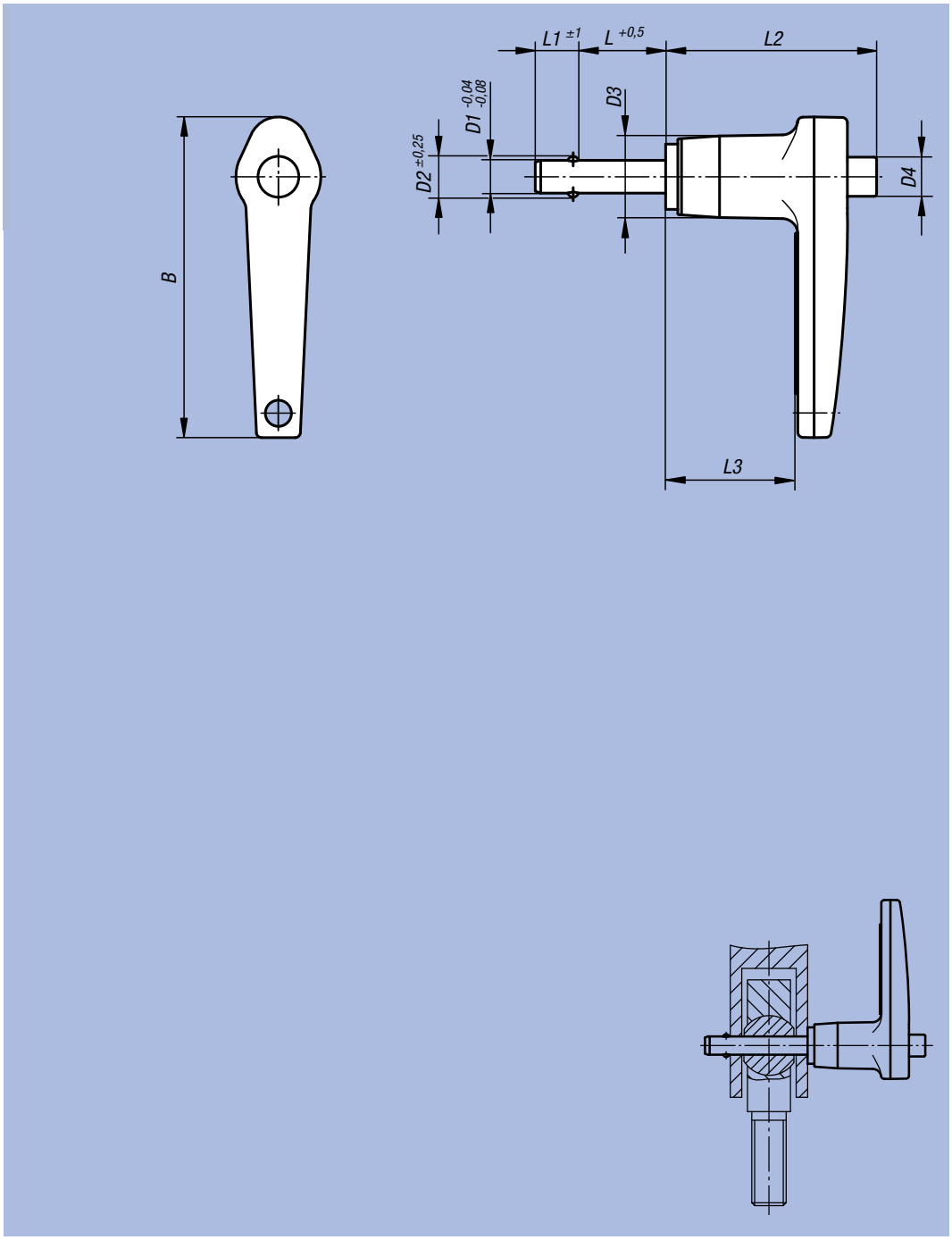

Material:
Bolt in stainless steel 1.4542;
grip aluminium die casting EN-AC 46000;
push button in aluminium EN-AW 2024 T4;
balls in stainless steel 1.4125;
compression spring in stainless steel

Surface finish:
Bolt, hardened min. 40 HRC and passivated; grip black anodised;
Push button blue anodised;
balls hardened 58 +4 HRC and passivated;
passivated compression spring

Sample order:
nlm 03196-14405030
(please also indicate dimension L, e.g. 030 for L = 30 mm)

Note:
Ball locking bolts are used for fast and easy fixing and joining of parts and workpieces. The two balls can be disengaged by depressing the push button, so that the parts to be joined can be pegged. When the push button is released the balls lock the connection safely and permanently. If required, the ball locking bolts can be provided with a holding rope.

The bolt made of high-strength, hardened stainless steel is suitable for extreme loads and provides a very high level of wear protection.

Shearing force double-edged
$(F) = S \cdot \tau$ aB max.

Accessory:
Safety helix cable 03199-10200
Restraining Cable with eye 03199-....
Key Ring 03199-15/19/23

Order No.	B	D1	D2	D3	D4	L	L1	L2	L3	Receiving hole H11	Shearing force double-edged max. kN
03196-14405***	46,7	5	5,54	11,9	5,8	10 / 15 / 20 / 25 / 30 / 35 / 40 / 50 / 60 / 70	6	30,7	19,3	5	24,40
03196-14406***	46,7	6	6,99	11,9	5,8	10 / 15 / 20 / 25 / 30 / 35 / 40 / 50 / 60 / 70 / 80	7	30,7	19,3	6	35,64
03196-14408***	46,7	8	9,42	11,9	5,8	10 / 15 / 20 / 25 / 30 / 35 / 40 / 50 / 60 / 70 / 80	8	30,7	19,3	8	63,80
03196-15110***	54,1	10	11,86	14,2	7,4	15 / 20 / 25 / 30 / 35 / 40 / 50 / 60 / 70 / 80 / 90 / 100	9	34,8	22,1	10	100,10
03196-15712***	60,2	12	14,45	18,3	10,7	20 / 25 / 30 / 35 / 40 / 50 / 60 / 70 / 80 / 90 / 100	10	40,6	25,4	12	144,06
03196-16816***	68,3	16	19	23,9	13,7	25 / 30 / 35 / 40 / 50 / 60 / 70 / 80 / 90 / 100	14	45	28,2	16	257,18

Safety helix cable



Material, surface finish:
Copper litz wire coated in PUR, black.
Eye in galvanized copper.
Key ring in steel, chromium-plated.

Sample order:
nlm 03199-10200

Note:
Elastic helix cable to secure equipment parts. Very good reset force, robust and wear-resistant.

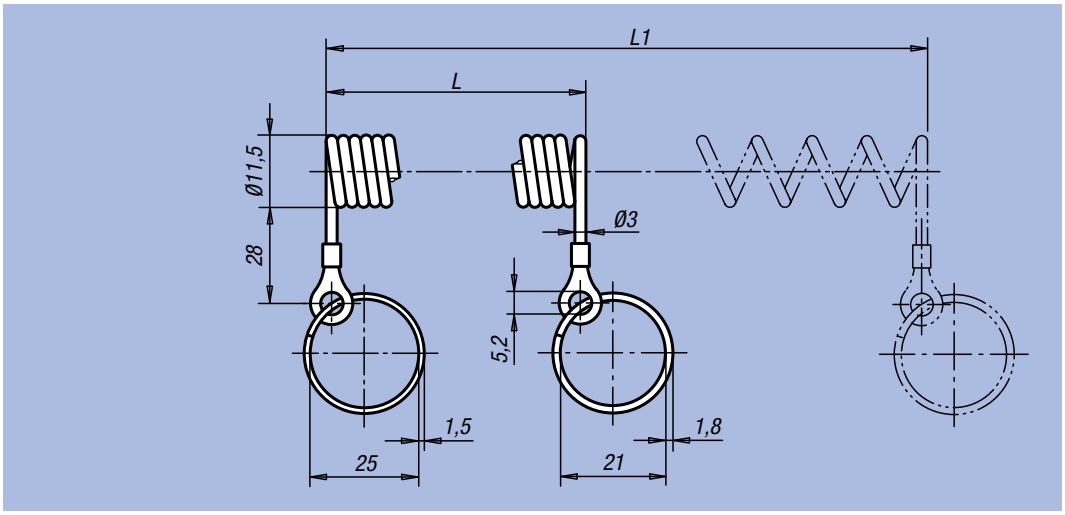

Order No.	L	L1
03199-10200	200	1000

Notes:

Restraining Cables

with eye



Material, surface finish:
Stainless steel restraining cable with plastic casing;
clip and eye in aluminium

Sample order:
nlm 03199-0200

Note:
With the Restraining Cable and Key Ring 03199, the Ball Locking Bolts 03193, 03194 and 03196 and the Locking Pins 03195 can be secured so that they cannot be lost. A screw M5 is used to secure the restraining cable.
Application temperature: +80 °C.

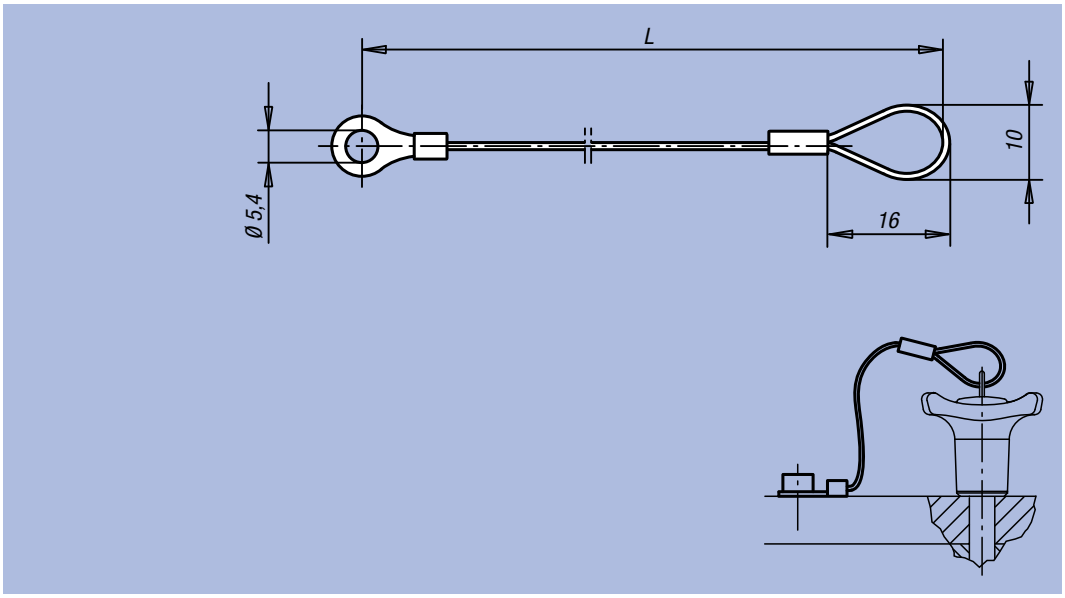

Order No.	L
03199-0150	150
03199-0200	200
03199-0300	300

nlm 03199

Key Rings



Material, surface finish:
Stainless steel 1.4310, natural finish

Sample order:
nlm 03199-23

Note:
Suitable for Restraining Cable with eye 03199, Ball Locking Bolts 03193, 03194, 03196, Locking Pins 03195 and Locking Bolts 03092, 03096, 03098.

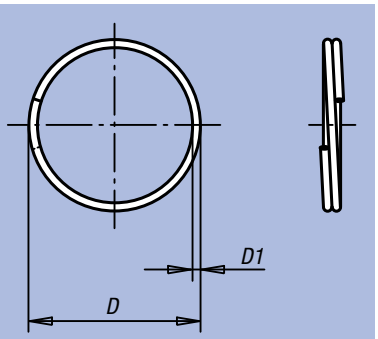

Order No.	D	D1
03199-15	15	1
03199-19	19	1
03199-23	23	1,2
03199-28	28	1,7

Pair of Parallel Blocks

DIN 6346



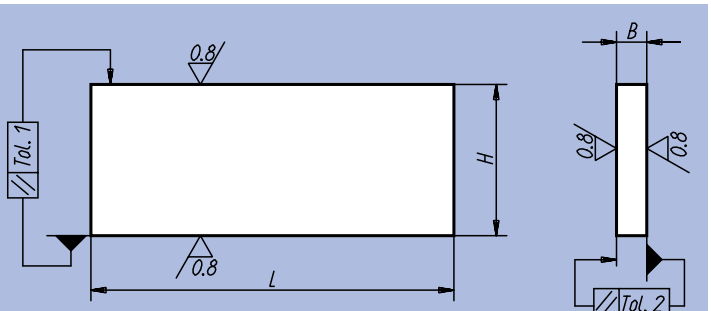

Material:
Steel.

Surface finish:
hardened and ground, grade of accuracy 1, paired tolerance IT 5, nominal dimensional tolerance DIN ISO 2768-mK.

Sample order:
nlm 03200-10

On request:
Several equivalent pairs.

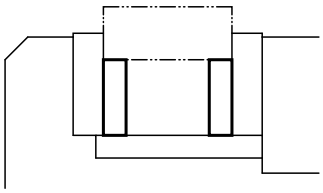

Order No.	H	Tolerance 1	Tolerance to DIN ISO 2768-mK	Tolerance within 1 pair IT 5	B	Tolerance 2	Tolerance to DIN ISO 2768-mK	Tolerance within 1 pair IT 5	L	kg
03200-01	8	0,006	±0,2	±0,006	2,5	0,004	±0,1	±0,005	63	0,020
03200-02	10	0,006	±0,2	±0,006	3,2	0,005	±0,1	±0,005	63	0,030
03200-03	12	0,008	±0,2	±0,008	4	0,005	±0,1	±0,005	63	0,045
03200-04	16	0,008	±0,2	±0,008	5	0,005	±0,1	±0,005	63	0,080
03200-05	20	0,009	±0,2	±0,009	6,3	0,006	±0,2	±0,006	63	0,125
03200-06	12	0,008	±0,2	±0,008	4	0,005	±0,1	±0,005	100	0,075
03200-07	16	0,008	±0,2	±0,008	5	0,005	±0,1	±0,005	100	0,125
03200-08	20	0,009	±0,2	±0,009	6,3	0,006	±0,2	±0,006	100	0,200
03200-09	25	0,009	±0,2	±0,009	8	0,006	±0,2	±0,006	100	0,315
03200-10	32	0,011	±0,3	±0,011	10	0,006	±0,2	±0,006	100	0,500
03200-11	40	0,011	±0,3	±0,011	12	0,008	±0,2	±0,008	100	0,750
03200-12	25	0,009	±0,2	±0,009	8	0,006	±0,2	±0,006	160	0,500
03200-13	32	0,011	±0,3	±0,011	10	0,006	±0,2	±0,006	160	0,800
03200-14	40	0,011	±0,3	±0,011	12	0,008	±0,2	±0,008	160	1,200
03200-15	50	0,011	±0,3	±0,011	16	0,008	±0,2	±0,008	160	2,000
03200-16	63	0,013	±0,3	±0,013	20	0,009	±0,2	±0,009	160	3,170
03200-17	63	0,013	±0,3	±0,013	20	0,009	±0,2	±0,009	250	4,880
03200-18	80	0,013	±0,3	±0,013	25	0,009	±0,2	±0,009	250	7,900
03200-19	100	0,015	±0,3	±0,015	32	0,011	±0,3	±0,011	250	12,680

Notes:

Assortment of Parallel Blocks



Material:
Steel.
Surface finish:
case-hardened and ground.
Paired to thenearest 0,004 mm with a height tolerance of ±0,004 mm. B and L dimension tolerances to DIN ISO 2768-m
Sample order:
nlm 03212-01
Note:
The Assortment of Parallel Blocks is supplied in a wooden box with a folding cover.

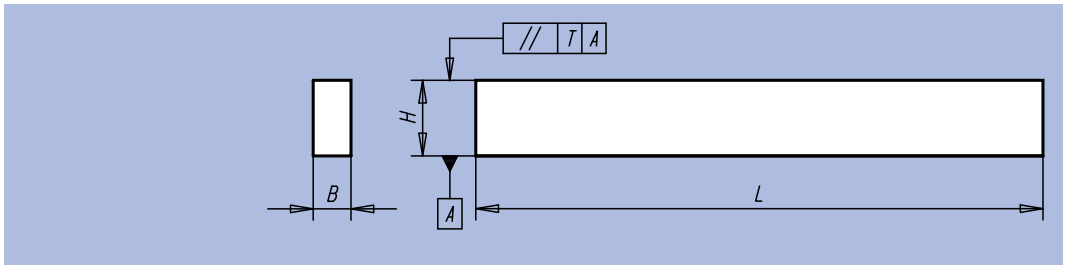

Référence	Content: 1 pair of each H x B x L	H pair tolerance T	H nominal size tolerance	kg
03212-01	14 x 10 x 150	0,004	±0,004	11,4
	16 x 10 x 150			
	18 x 10 x 150			
	20 x 10 x 150			
	22 x 10 x 150			
	24 x 10 x 150			
	26 x 10 x 150			
	28 x 10 x 150			
	30 x 10 x 150			
	32 x 10 x 150			
	35 x 10 x 150			
	40 x 10 x 150			
	45 x 10 x 150			
	50 x 10 x 150			

Positioning Brackets

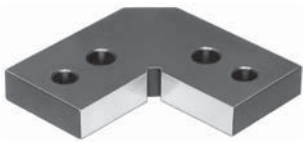

Material:
Tempered steel 1.7225
Surface finish:
Ground and treated to offer 1400 N/mm² resistance.
Sample order:
nlm 03220-02

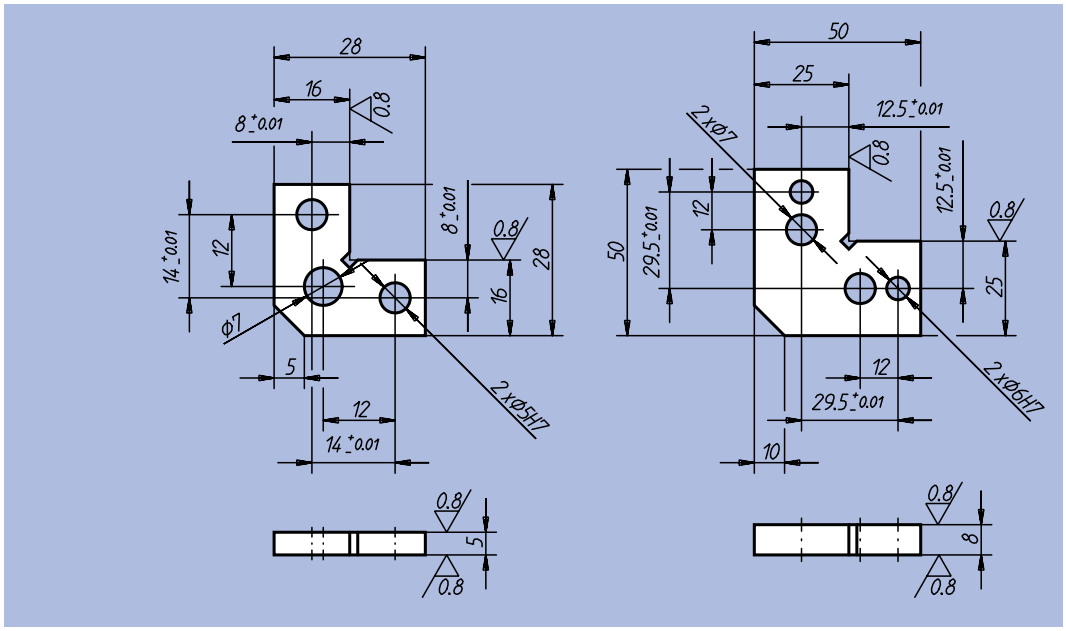

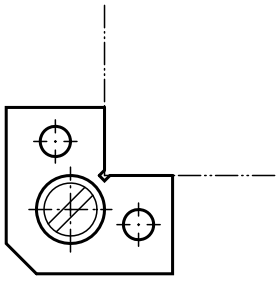

Order No.	kg
03220-01	0,020
03220-02	0,100

Tenon



Material:
Tempered steel 1.1191

Surface finish:
Black oxide finish.

Sample order:
nlm 03240-08X8
(Please also indicate dimension B1)

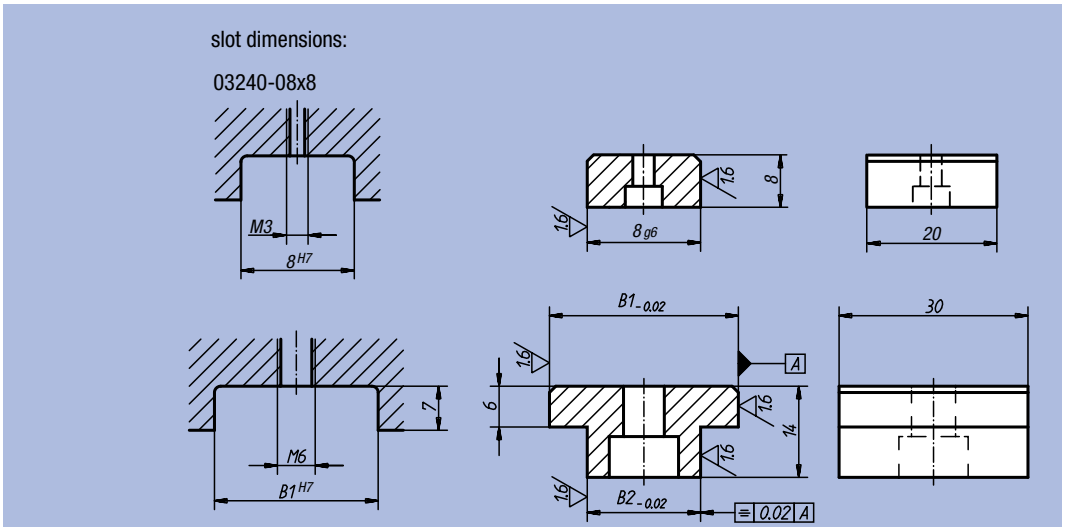

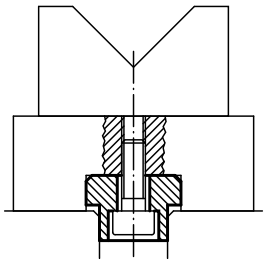

Order No.	B1	B2
03240-08X	8	8
03240-12X	20 / 22 / 30	12
03240-14X	20 / 22 / 30	14
03240-16X	20 / 22 / 30	16
03240-18X	20 / 22 / 30	18
03240-22X	20 / 22 / 30	22

T-Slot Nuts



Material:
Hardened steel.

Surface finish:
case-hardened, black oxide finish and ground.

Sample order:
nlm 03250-16

Note:
T-slot nuts are used to align devices and chucks on machine-tool tables that have T-slots pursuant to DIN 650. They are screwed into the alignment slots of the devices. T-slot nuts are suitable if the devices are fitted to machines with the same width of slot.

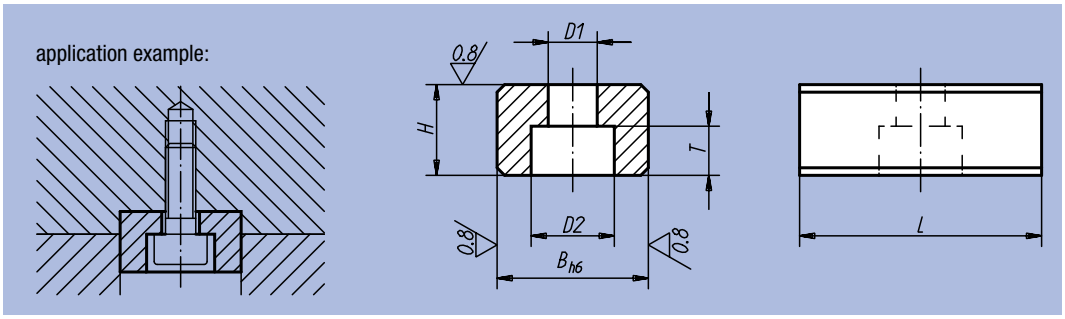

Order No.	B	H	L	D1	D2	T	for screws DIN 84 or 912	g
03250-10	10	8	20	4,5	8	4,3	M4x10	10
03250-12	12	8	20	5,5	10	5,3	M5x12	12
03250-14	14	10	22	6,6	11	6,3	M6x16	18
03250-16	16	10	22	6,6	11	6,3	M6x16	22
03250-18	18	10	22	6,6	11	6,3	M6x16	25
03250-20	20	10	22	6,6	11	6,3	M6x16	28
03250-22	22	12	32	6,6	11	6,3	M6x16	55

Elastic slot nuts

Pat. Nr. 4200676

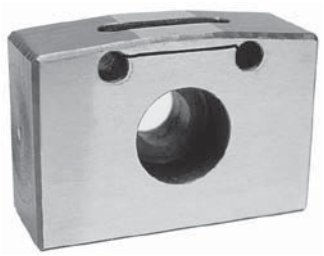

Material:
Hardened steel.

Surface finish:
case-hardened, black oxide finish and ground.

Sample order:
nlm 03252-12

Note:
Elastisc slot nuts are used to align devices and chucking tools on machine tables with T-slots pursuant to DIN 650.

Benefits:
- Elastic deformation produces perfect seating.
- The tolerance play in the guide slots of the machine table and device or chucking tool are compensated independently of each other by the interrupted spriing surface.
- Repeat accuracies within 0.005 mm are possible.

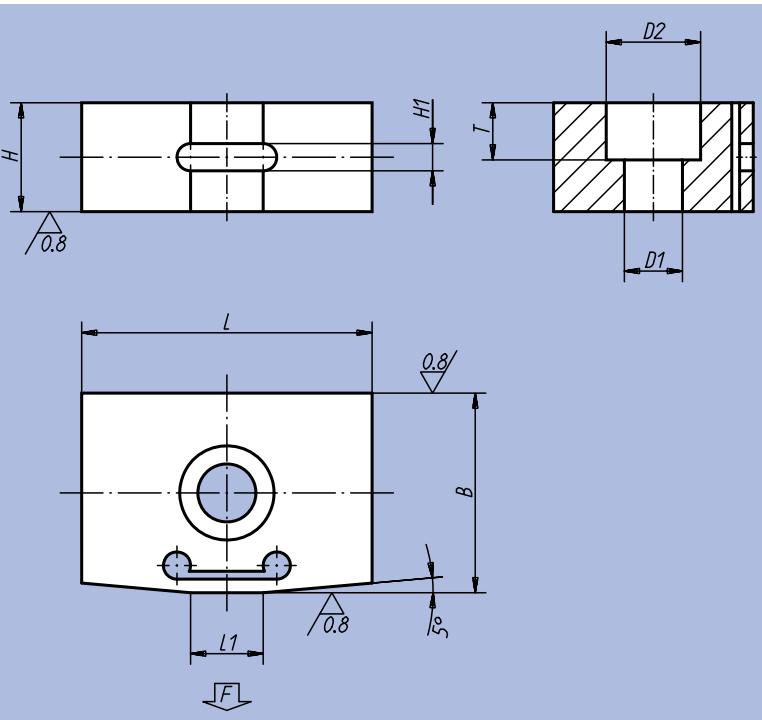

installation dimensions:

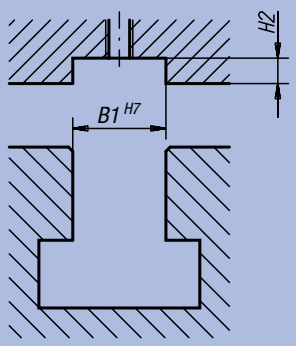

elastic deformation produces a perfect seating

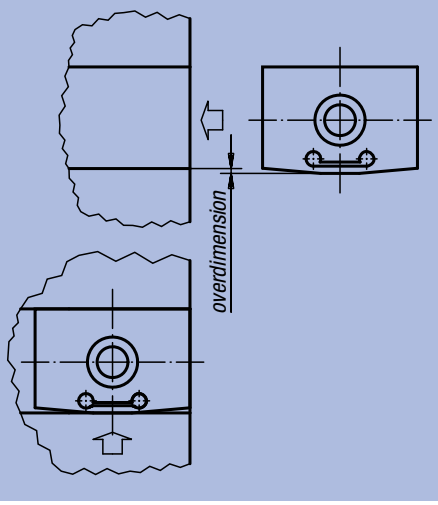

Independent compensation of two different slot dimensions

Spring surface 1:
Adjusted to the guide slot of the add-on part (device/chucking tool).

Spring surface 2:
Adjusted to the guide slot of the supporting table.

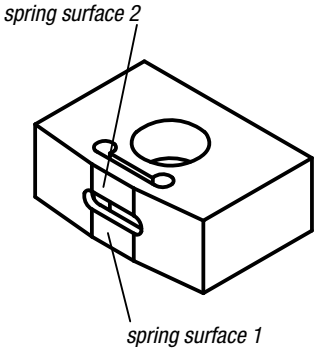

Order No.	B	B1	H	H1	H2	L	L1	D1	D2	T	Approx. spring force at 0.02 spring tension	Approx. spring force at 0.03 spring tension	≈ g
03252-10	10 +0,035 +0,020	10	8	2	4	20	6	4,3	7,4	4,3	100	200	9,0
03252-12	12 +0,038 +0,023	12	8	2	4	20	6	5,3	9,4	5,3	100	200	10,0
03252-14	14 +0,038 +0,023	14	10	3	5	22	8	6,4	10,4	6,3	100	200	14,5
03252-16	16 +0,038 +0,023	16	10	3	5	22	8	6,4	10,4	6,3	100	200	17,5
03252-18	18 +0,038 +0,023	18	10	3	5	22	8	6,4	10,4	6,3	100	200	20,5
03252-20	20 +0,040 +0,025	20	10	3	5	22	8	6,4	10,4	6,3	100	200	23,5
03252-22	22 +0,040 +0,025	22	12	3	6	32	11	6,4	10,4	6,3	100	200	50,0

Free slot nuts

DIN 6323



Material:
Hardened steel 1.0401
Surface finish:
case-hardened, black oxide finish and ground.
Sample order:
nlm 03260-14
Note:
Free slot nuts 03260 pursuant to DIN 6323 combine the advantages of the fixed slot nuts with the improved handling of pivoted vices, part apparatus and devices. After rough alignment, these slot nuts are inserted laterally.
When the device is transported, none of the slot nuts projecting downwards get in the way and the machine-tool table cannot be damaged.

slot dimensions:

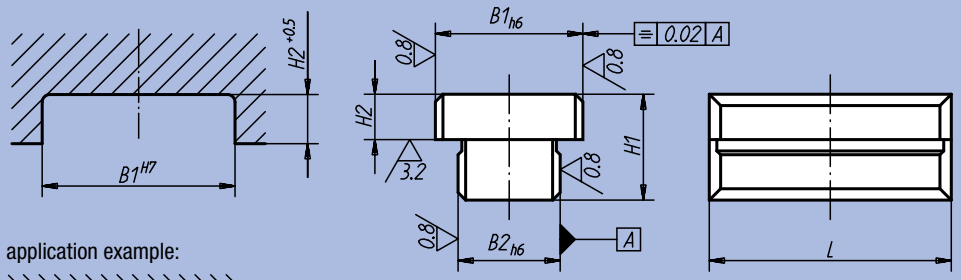

application example:

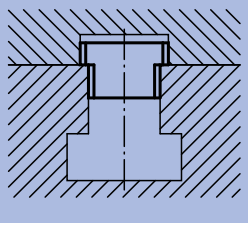

Order No.	B1	B2	H1	H2	L	kg
03260-10	12	10	12	3,6	20	0,020
03260-12	20	12	14	5,5	32	0,050
03260-14	20	14	14	5,5	32	0,055
03260-16	20	16	14	5,5	32	0,060
03260-18	20	18	14	5,5	32	0,065

T-Slot Nuts

with cylindrical fixture



Material:
Hardened steel
Surface finish:
Case-hardened, black oxide finish and ground
Sample order:
nlm 03270-10
Note:
For the alignment of jigs and tension devices on support plates and palettes with cylindrical aligning holes.
They can be used in drillholes, as well as in slots.

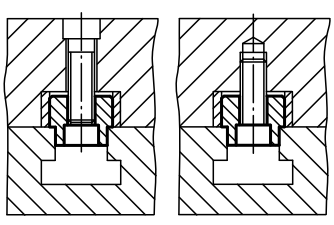

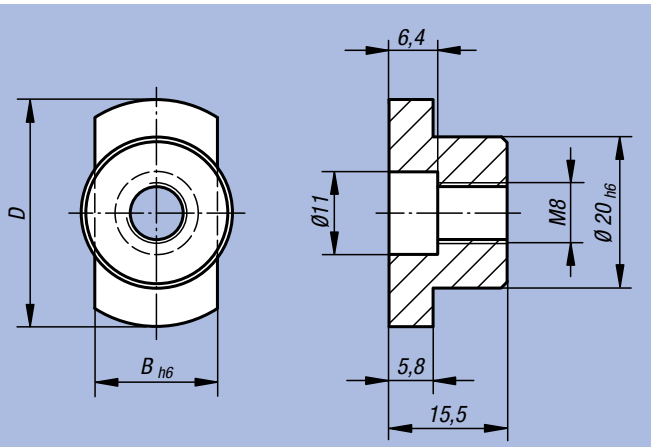

Order No.	B	D	kg
03270-10	10	30	0,036
03270-12	12	30	0,038
03270-14	14	30	0,041
03270-16	16	30	0,043
03270-18	18	30	0,045
03270-20	20	36	0,056
03270-22	22	40	0,062

Feather

to DIN 6885 A



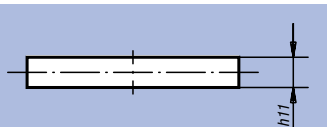

Material:
Steel 1.1192

Surface finish:
Natural finish

Sample order:
nlm 03288-04X12
(Please also indicate dimension L)

On request:
Feather in stainless steel 1.4571.

application example:

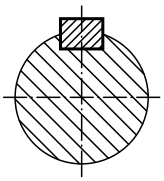

Order No.	B	H	L = length
03288-03X	3	3	8 / 10 / 12 / 14 / 16 / 18 / 20 / 22 / 25 / 28
03288-04X	4	4	8 / 10 / 12 / 14 / 16 / 18 / 20 / 22 / 25 / 28
03288-05X	5	5	12 / 14 / 16 / 18 / 20 / 22 / 25 / 28 / 32 / 36 / 40
03288-06X	6	6	12 / 14 / 16 / 18 / 20 / 22 / 25 / 28 / 32 / 36 / 40 / 45
03288-08X	8	7	14 / 16 / 18 / 20 / 22 / 25 / 28 / 32 / 36 / 40 / 45 / 50 / 70
03288-10X	10	8	22 / 25 / 28 / 32 / 36 / 40 / 45 / 50 / 56 / 70 / 80
03288-12X	12	8	25 / 28 / 32 / 36 / 40 / 45 / 50 / 56 / 70 / 80
03288-14X	14	9	25 / 28 / 32 / 36 / 40 / 45 / 50 / 56 / 70 / 80
03288-16X	16	10	50 / 56 / 63 / 70 / 80 / 90 / 100

Curved washers

DIN 6888



Material:
Steel 1.1192

Surface finish:
natural finish.

Sample order:
nlm 03289-04X65

Note:
Curved washers can also be supplied in stainless steel 1.4571 on request.

application example:

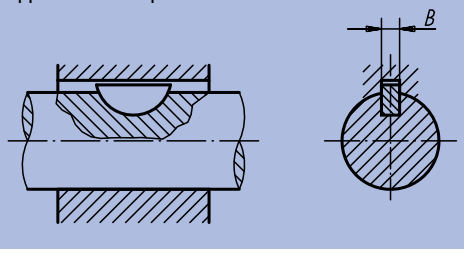

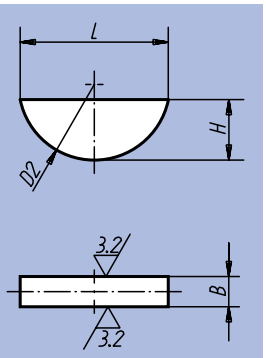

Order No.	B	H	L	D2
03289-02X5	2	5	12,6	13
03289-03X5	3	5	12,6	13
03289-03X65	3	6,5	15,7	16
03289-04X5	4	5	12,6	13
03289-04X65	4	6,5	15,7	16
03289-04X75	4	7,5	18,6	19
03289-05X65	5	6,5	15,7	16
03289-05X75	5	7,5	18,6	19
03289-05X9	5	9	21,6	22
03289-06X9	6	9	21,6	22
03289-06X10	6	10	24,5	25
03289-06X11	6	11	27,3	28
03289-08X11	8	11	27,3	28
03289-08X13	8	13	31,4	32
03289-10X13	10	13	31,4	32
03289-10X16	10	16	43,1	45

Driver nuts

DIN 2079



Material:
Hardened steel.

Surface finish:
case-hardened, black oxide finish and ground.

Sample order:
nlm 03290-04

Form A
for spindle head
No. 30 to 60

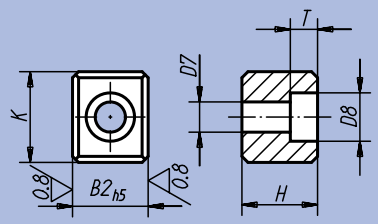

Form B
for spindle head
No. 60 (old norm)

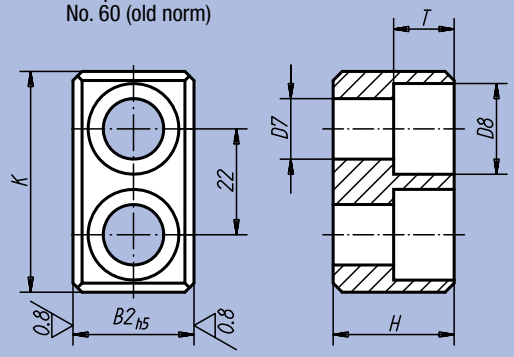

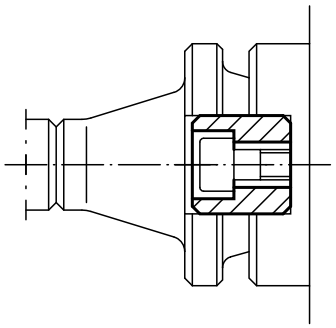

Form C
for spindle head
No. 30 to 50

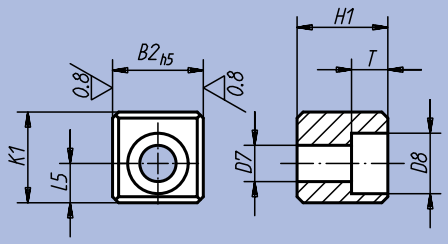

Order No. Form A	Order No. Form B	Order No. Form C	for spindle head No.	K	K1	B2	D7	D8	H	H1	T	L5	kg
03290-01	-	03290-013	30	16,5	13,5	15,9	6,4	10,4	16	24,5	6,2	5,5	0,025
03290-02	-	03290-023	40	19,5	16,5	15,9	6,4	10,4	16	24,5	6,2	7	0,032
03290-03	-	03290-033	45	19,5	17,5	19	8,4	13,5	19	26	8,3	7,5	0,035
03290-04	-	03290-043	50-55	26,5	24	25,4	13	19	25	29	12,3	11	0,085
03290-05	03290-06	-	60	45,5	-	25,4	13	19	25	-	12,3	-	0,140

Cylindrical Pins

to DIN 6325



Material:
Tool steel 1.2067.

Surface finish:
Hardened. Hardness 550 – 650 HV 30, ground.

Sample order:
nlm 03320-06X28
(Please also indicate dimension L1)

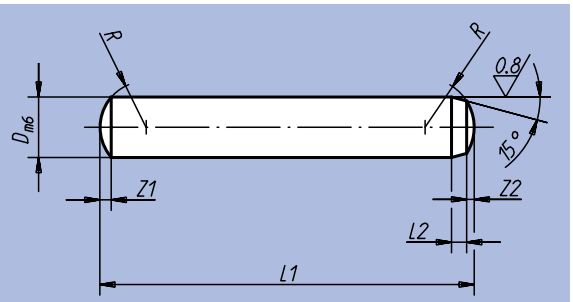

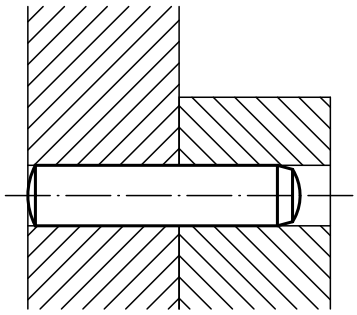

Order No.	D	L1 = length	L2	R	Z1	Z2	g at l=1 mm
03320-02X	2	6 / 8 / 10 / 12 / 14 / 16 / 18 / 20	0,6	2	0,3	0,18	0,0247
03320-25X	2,5	6 / 8 / 10 / 12 / 14 / 16 / 18 / 20 / 22 / 24	0,7	2,5	0,4	0,25	0,0385
03320-03X	3	8 / 10 / 12 / 14 / 16 / 18 / 20 / 22 / 24 / 28 / 30 / 32	0,8	3	0,45	0,3	0,0555
03320-04X	4	8 / 10 / 12 / 14 / 16 / 18 / 20 / 22 / 24 / 28 / 30 / 32 / 36 / 40	1	4	0,6	0,4	0,0985
03320-05X	5	10 / 12 / 14 / 16 / 18 / 20 / 22 / 24 / 28 / 30 / 32 / 36 / 40 / 45 / 50	1,2	5	0,75	0,5	0,1540
03320-06X	6	10 / 12 / 14 / 16 / 18 / 20 / 22 / 24 / 28 / 30 / 32 / 36 / 40 / 45 / 50 / 55 / 60	1,5	6	0,9	0,6	0,2220
03320-08X	8	12 / 14 / 16 / 18 / 20 / 22 / 24 / 28 / 30 / 32 / 36 / 40 / 45 / 50 / 55 / 60 / 70 / 80	1,8	8	1,2	0,8	0,3900
03320-10X	10	16 / 18 / 20 / 24 / 28 / 30 / 32 / 36 / 40 / 45 / 50 / 55 / 60 / 70 / 80 / 90 / 100	2	10	1,5	1	0,6150
03320-12X	12	18 / 20 / 24 / 28 / 30 / 32 / 36 / 40 / 45 / 50 / 55 / 60 / 70 / 80 / 90 / 100 / 120	2,5	12	1,8	1,3	0,8875
03320-14X	14	24 / 28 / 32 / 36 / 40 / 45 / 50 / 55 / 60 / 70 / 80 / 90 / 100 / 120	2,5	16	2,0	1,3	1,2075
03320-16X	16	24 / 28 / 32 / 36 / 40 / 45 / 50 / 55 / 60 / 70 / 80 / 90 / 100 / 110 / 120	3	16	2,5	1,7	1,5775

Tapped Cylindrical Pins

to DIN 7979



Material:
Tool steel 1.2067.

Surface finish:
surface-hardened,
Hardness 60 ±2 HRC, tempered, ground and lapped.

Sample order:
nlm 03325-06X28
(Please also indicate dimension L)

Note:
Tapped Cylindrical Pins are chiefly used in blind holes. The milled flat prevents air compression in blind holes. The tapping makes it possible to use the extractor 03328.

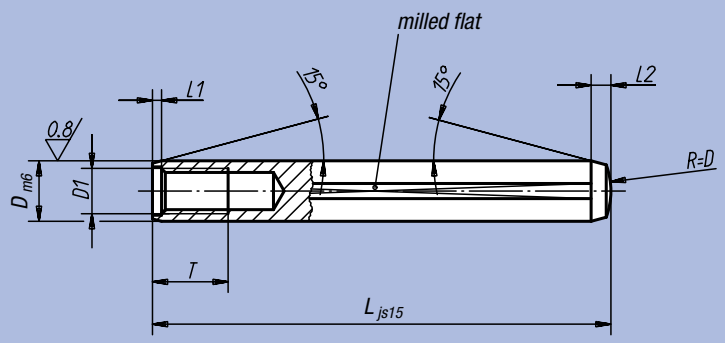

Order No.	D	L	D1	T	L1 approx.	L2 approx.
03325-05X	5	16 / 20 / 24 / 28 / 32 / 36 / 40 / 45	M3	6	0,6	1,7
03325-06X	6	16 / 18 / 20 / 24 / 28 / 32 / 36 / 40 / 45 / 50 / 55 / 60	M4	6	0,8	2,1
03325-08X	8	20 / 24 / 28 / 32 / 36 / 40 / 45 / 50 / 55 / 60 / 70 / 80 / 90 / 100	M5	8	1	2,6
03325-10X	10	20 / 24 / 28 / 32 / 36 / 40 / 45 / 50 / 55 / 60 / 70 / 80 / 90 / 100	M6	10	1,2	3
03325-12X	12	32 / 36 / 40 / 45 / 50 / 55 / 60 / 70 / 80 / 90 / 100 / 120	M6	10	1,6	3,8
03325-14X	14	32 / 36 / 40 / 45 / 50 / 55 / 60 / 70 / 80 / 90 / 100 / 120	M8	12	1,8	4
03325-16X	16	40 / 45 / 50 / 55 / 60 / 70 / 80 / 90 / 100 / 120	M8	12	2	4,7
03325-20X	20	45 / 50 / 55 / 60 / 70 / 80 / 90 / 100 / 120	M10	16	2,5	6

Extractor



Material, surface finish:
Hammer head tempered steel, heat-treated and chromium-plated. Shaft, stop and guide sleeve tool steel, hardened and chromiumplated

Sample order:
nlm 03328-40

Note:
These Extractors are used to remove Locating Pins and Centring Pins (03105, 03106, 03107, 03108, 03325) with M3 - M8 taps.

Accessory:
Storage box for guide sleeves.

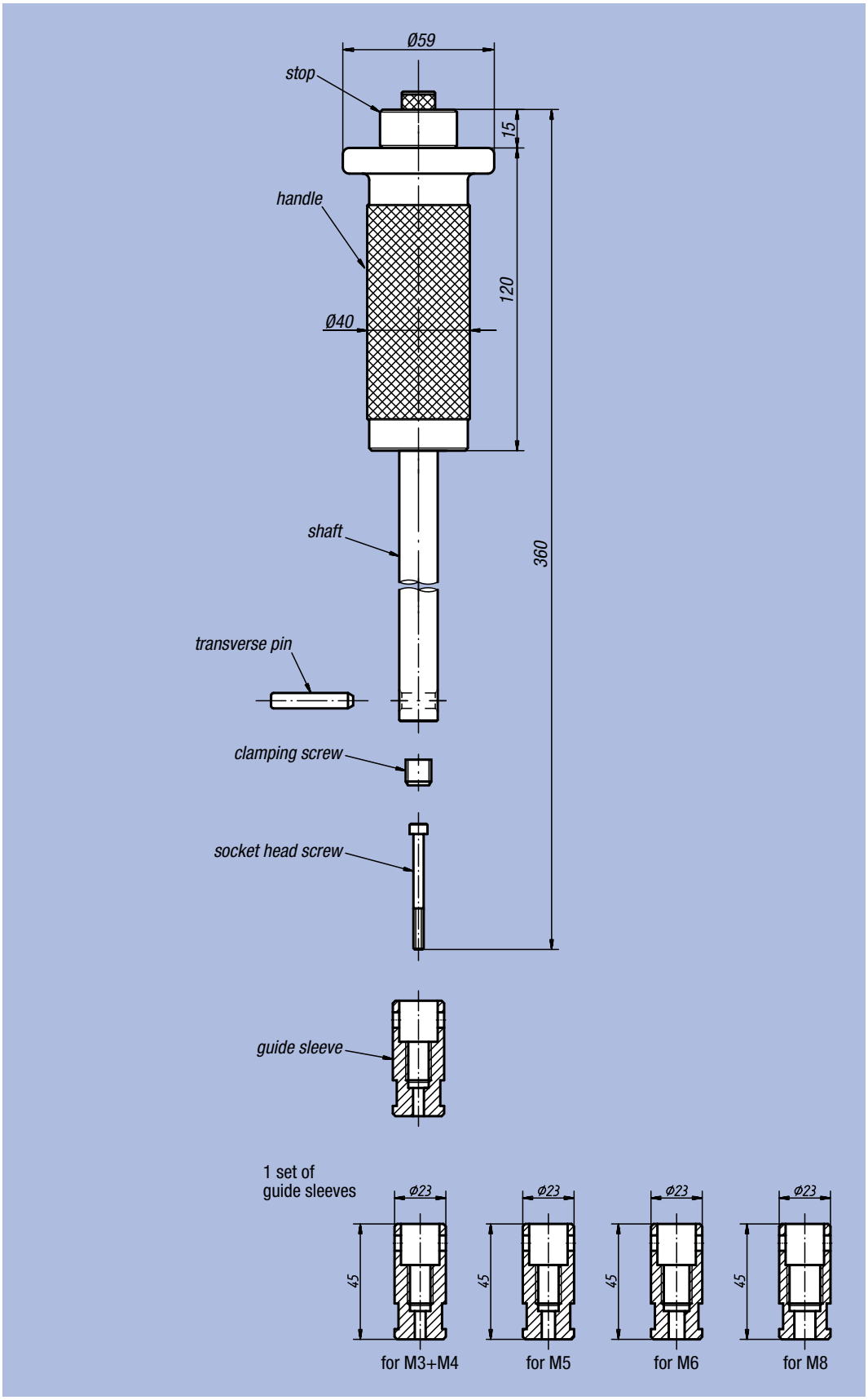

Order No.	kg
03328-40	1,700

Lateral Spring Plungers



Material:
Sleeve in aluminium, spring in steel, pressure pin in steel or in plastic

Surface finish:
Pressure pin (steel) surface hardened and galvanized,
sleeve blue galvanized

Sample order:
nlm 03330-72064

Note:
Lateral Spring Plungers aid in the positioning and clamping, holding and fastening of tools and parts during engraving, labelling, drilling, galling, threading, honing, grinding, welding, soldering, hard-facing, assembling, etc.
In order to position, see 03330 for suitable eccentric bushes.

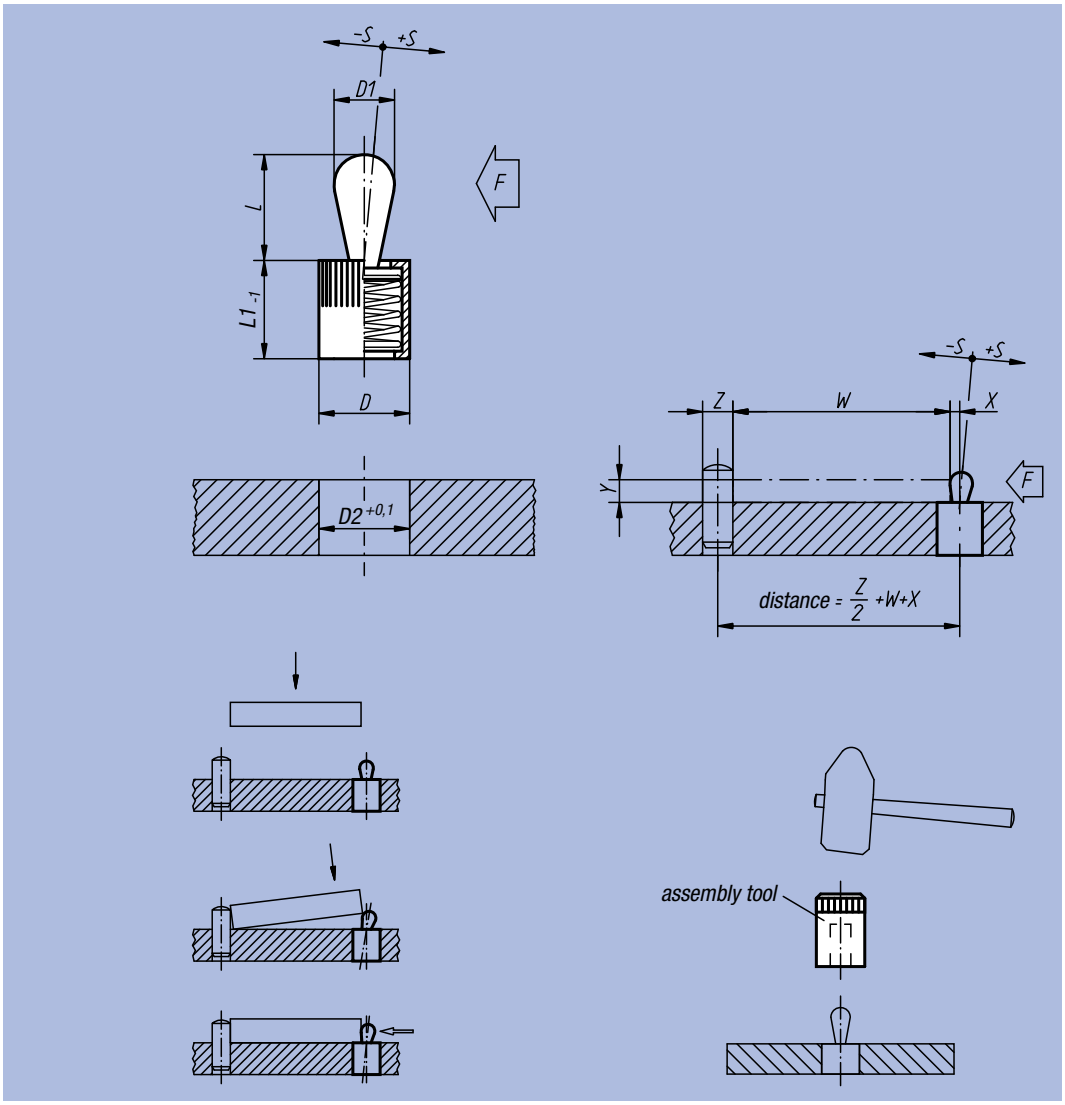

Lateral Spring Plungers without seal, pressure pin and spring in steel

Order No.	D	D1	L	L1	D2	±S	F approx. N	X if Y = 1	X if Y = 2	X if Y = 3	X if Y = 4,5	X if Y = 6	X if Y = 8	g	Order No. assembly tool
03330-21034	6	3	4	7	6	0,5	10	0,8	1	1	1	1	1	0,6	03330-03
03330-21036	6	3	4	7	6	0,5	20	0,8	1	1	1	1	1	0,6	03330-03
03330-21038	6	3	4	7	6	0,5	40	0,8	1	1	1	1	1	0,7	03330-03
03330-21054	10	5	6,7	11	10	0,8	20	-	1,5	1,7	1,7	1,7	1,7	2,7	03330-05
03330-21056	10	5	6,7	11	10	0,8	50	-	1,5	1,7	1,7	1,7	1,7	2,8	03330-05
03330-21058	10	5	6,7	11	10	0,8	100	-	1,5	1,7	1,7	1,7	1,7	3,1	03330-05
03330-21064	10	6	10,7	11	10	1	40	-	-	-	1,7	1,9	1,9	3,4	03330-05
03330-21066	10	6	10,7	11	10	1	75	-	-	-	1,7	1,9	1,9	3,6	03330-05
03330-21068	10	6	10,7	11	10	1	150	-	-	-	1,7	1,9	1,9	3,8	03330-05
03330-21084	12	8	13,9	13	12	1,3	50	-	-	-	-	2,5	2,7	6,8	03330-08
03330-21086	12	8	13,9	13	12	1,3	100	-	-	-	-	2,5	2,7	7,4	03330-08
03330-21088	12	8	13,9	13	12	1,3	200	-	-	-	-	2,5	2,7	7,4	03330-08
03330-21104	16	10	16,7	17	16	1,6	100	-	-	-	-	-	3,1	15,0	03330-10
03330-21106	16	10	16,7	17	16	1,6	200	-	-	-	-	-	3,1	15,0	03330-10
03330-21108	16	10	16,7	17	16	1,6	300	-	-	-	-	-	3,1	15,3	03330-10

Lateral Spring Plungers

Lateral Spring Plungers with seal, pressure pin and spring in steel

Order No.	D	D1	L	L1	D2	±S	F approx. N	X if Y = 1	X if Y = 2	X if Y = 3	X if Y = 4,5	X if Y = 6	X if Y = 8	□ g	Order No. assembly tool
03330-22034	6	3	4	7	6	0,5	10	0,8	1	1	1	1	1	0,6	03330-03
03330-22036	6	3	4	7	6	0,5	20	0,8	1	1	1	1	1	0,6	03330-03
03330-22038	6	3	4	7	6	0,5	40	0,8	1	1	1	1	1	0,7	03330-03
03330-22054	10	5	6	12	10	0,8	20	-	1,5	1,7	1,7	1,7	1,7	2,7	03330-05
03330-22056	10	5	6	12	10	0,8	50	-	1,5	1,7	1,7	1,7	1,7	2,9	03330-05
03330-22058	10	5	6	12	10	0,8	100	-	1,5	1,7	1,7	1,7	1,7	3,1	03330-05
03330-22064	10	6	10	12	10	1	40	-	-	-	1,7	1,9	1,9	3,4	03330-05
03330-22066	10	6	10	12	10	1	75	-	-	-	1,7	1,9	1,9	3,6	03330-05
03330-22068	10	6	10	12	10	1	150	-	-	-	1,7	1,9	1,9	3,8	03330-05
03330-22084	12	8	13	14	12	1,3	50	-	-	-	-	2,5	2,7	7,0	03330-08
03330-22086	12	8	13	14	12	1,3	100	-	-	-	-	2,5	2,7	8,0	03330-08
03330-22088	12	8	13	14	12	1,3	200	-	-	-	-	2,5	2,7	7,4	03330-08
03330-22104	16	10	16	18	16	1,6	100	-	-	-	-	-	3,1	15,0	03330-10
03330-22106	16	10	16	18	16	1,6	200	-	-	-	-	-	3,1	15,2	03330-10
03330-22108	16	10	16	18	16	1,6	300	-	-	-	-	-	3,1	15,6	03330-10

Lateral Spring Plungers without seal, pressure pin in plastic, spring in steel

Order No.	D	D1	L	L1	D2	±S	F approx. N	X if Y = 1	X if Y = 2	X if Y = 3	X if Y = 4,5	X if Y = 6	X if Y = 8	□ g	Order No. assembly tool
03330-71034	6	3	4	7	6	0,5	10	0,8	1	1	1	1	1	0,4	03330-03
03330-71036	6	3	4	7	6	0,5	20	0,8	1	1	1	1	1	0,4	03330-03
03330-71054	10	5	6,7	11	10	0,8	20	-	1,5	1,7	1,7	1,7	1,7	1,3	03330-05
03330-71056	10	5	6,7	11	10	0,8	50	-	1,5	1,7	1,7	1,7	1,7	1,3	03330-05
03330-71064	10	6	10,7	11	10	1	40	-	-	-	1,7	1,9	1,9	1,5	03330-05
03330-71066	10	6	10,7	11	10	1	75	-	-	-	1,7	1,9	1,9	1,5	03330-05
03330-71084	12	8	13,9	13	12	1,3	50	-	-	-	-	2,5	2,7	2,9	03330-08
03330-71086	12	8	13,9	13	12	1,3	100	-	-	-	-	2,5	2,7	2,9	03330-08
03330-71104	16	10	16,7	17	16	1,6	100	-	-	-	-	-	3,1	6,6	03330-10
03330-71106	16	10	16,7	17	16	1,6	200	-	-	-	-	-	3,1	6,6	03330-10

Lateral Spring Plungers with seal, pressure pin in plastic, spring in steel

Order No.	D	D1	L	L1	D2	±S	F approx. N	X if Y = 1	X if Y = 2	X if Y = 3	X if Y = 4,5	X if Y = 6	X if Y = 8	□ g	Order No. assembly tool
03330-72034	6	3	4	7	6	0,5	10	0,8	1	1	1	1	1	0,4	03330-03
03330-72036	6	3	4	7	6	0,5	20	0,8	1	1	1	1	1	0,4	03330-03
03330-72054	10	5	6	12	10	0,8	20	-	1,5	1,7	1,7	1,7	1,7	1,3	03330-05
03330-72056	10	5	6	12	10	0,8	50	-	1,5	1,7	1,7	1,7	1,7	1,3	03330-05
03330-72064	10	6	10	12	10	1	40	-	-	-	1,7	1,9	1,9	1,5	03330-05
03330-72066	10	6	10	12	10	1	75	-	-	-	1,7	1,9	1,9	1,5	03330-05
03330-72084	12	8	13	14	12	1,3	50	-	-	-	-	2,5	2,7	3,0	03330-08
03330-72086	12	8	13	14	12	1,3	100	-	-	-	-	2,5	2,7	3,0	03330-08
03330-72104	16	10	16	18	16	1,6	100	-	-	-	-	-	3,1	6,7	03330-10
03330-72106	16	10	16	18	16	1,6	200	-	-	-	-	-	3,1	6,7	03330-10

Eccentric Bushes and assembly tools

for lateral spring plungers



Material:
Steel

Surface finish:
Black oxide finish

Sample order:
nlm 03330-180

Note:
Eccentric Bushes enable Lateral Spring Plungers to be positioned exactly to the workpiece.

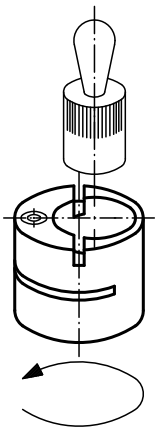

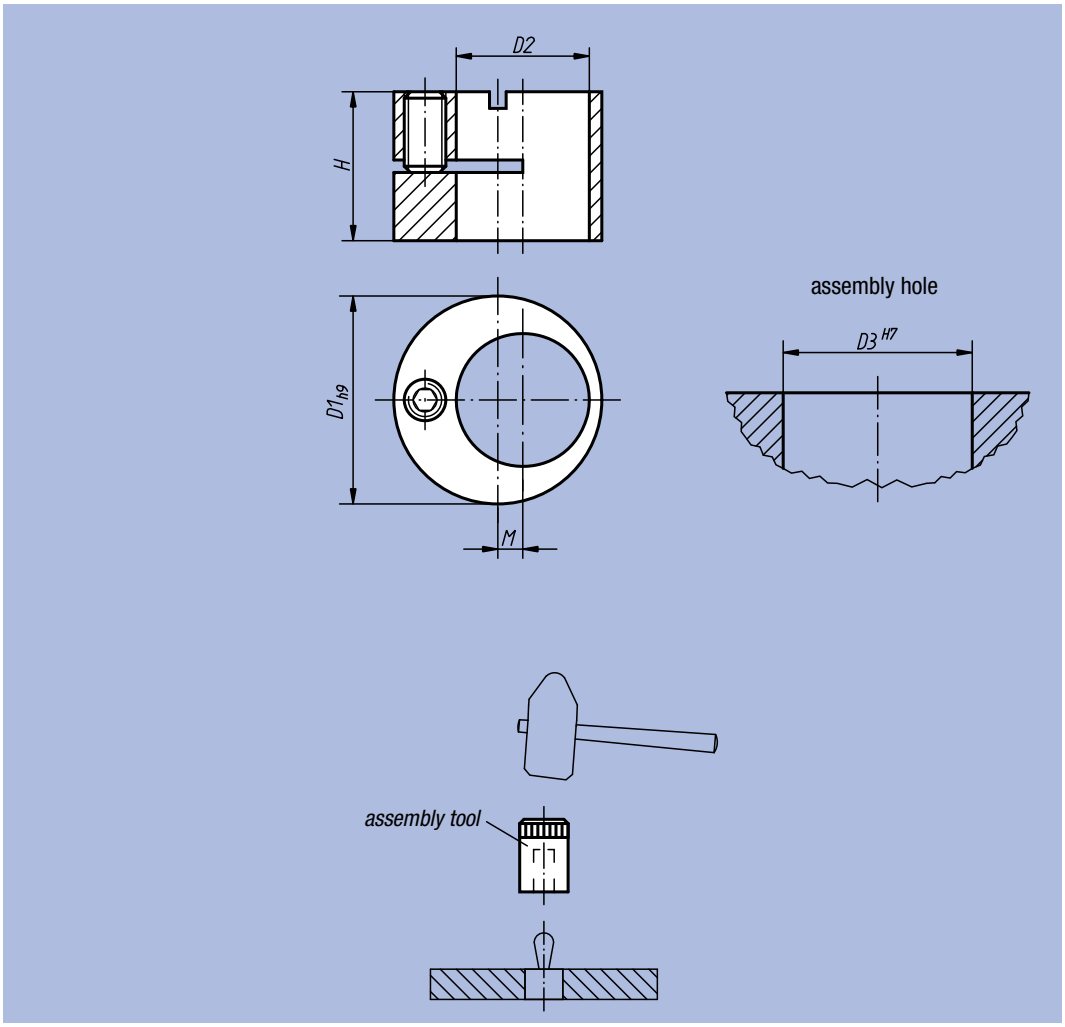

Assembly tools

Order No.	Suitable for Lateral Spring Plungers with D =
03330-03	6
03330-05	10
03330-08	12
03330-10	16

Eccentric Bushes for lateral spring plungers

Order No.	D1	D2	D3	H	M	≈ kg	Suitable for Lateral Spring Plungers with D =
03330-120	12	6	12	9,9	2	0,006	6
03330-150	15	8	15	9,9	2	0,008	8
03330-160	16	10	16	11,9	2	0,010	10
03330-180	18	12	18	13,9	2	0,012	12
03330-250	25	16	25	17,9	3	0,036	16

Lateral Spring Plungers

without pressure pin



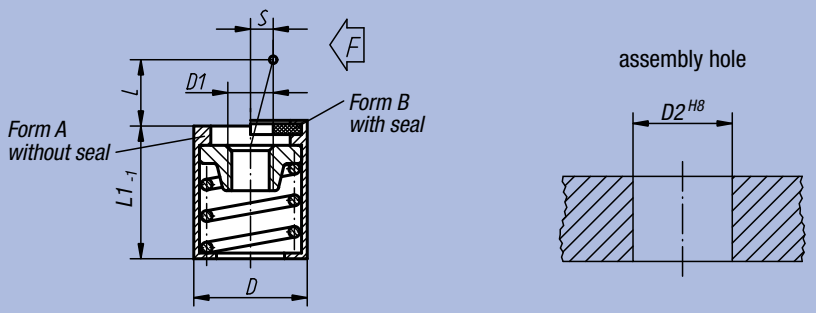

Material:
Sleeve in aluminium; receiving washer in steel, hardened and black oxide finish; spring in steel

Surface finish:
Sleeve blue galvanized

Sample order:
nlm 03332-31058

Note:
Depending on the circumstances, the pressure pin can be fabricated by the customer and screwed into the threaded hole of the receiving washer. Utilizing stroke (S) and the corresponding length (L), lateral pressure (F) can be achieved.
In addition, form B is equipped with a seal to prevent chips and dirt from entering.

Order No. Form A	Order No. Form B	D	D1	D2	L	L1	S	F approx. N	kg
03332-31054	03332-32054	10	M4	10	4	12	1,6	20	0,004
03332-31056	03332-32056	10	M4	10	4	12	1,6	50	0,004
03332-31058	03332-32058	10	M4	10	4	12	1,6	100	0,004
03332-31064	03332-32064	10	M4	10	7,5	12	2	40	0,004
03332-31066	03332-32066	10	M4	10	7,5	12	2	75	0,004
03332-31068	03332-32068	10	M4	10	7,5	12	2	150	0,004
03332-31104	03332-32104	16	M6	16	11,5	18	3,2	100	0,010
03332-31106	03332-32106	16	M6	16	11,5	18	3,2	200	0,010
03332-31108	03332-32108	16	M6	16	11,5	18	3,2	300	0,010

Notes:

Lateral Spring Plungers

with threaded sleeve



Material:
Sleeve and spring in steel,
pressure pin in steel or in plastic

Surface finish:
Pressure pin in steel, hardened and galvanized,
sleeve blue galvanized

Sample order:
nlm 03334-1020X**12**
(please also indicate size L)

L 11,5 = **L 12**
L 19 = **L 20**
L 26,5 = **L 27**
L 18 = **L 16**
L 31,5 = **L 29**
L 45 = **L 43**

Note:
Lateral Spring Plungers with threaded sleeve can be positioned individually to the part to be clamped. Furthermore, the threaded sleeve is suitable to be screwed into thin sheets, as it can be mounted with one or two nuts.

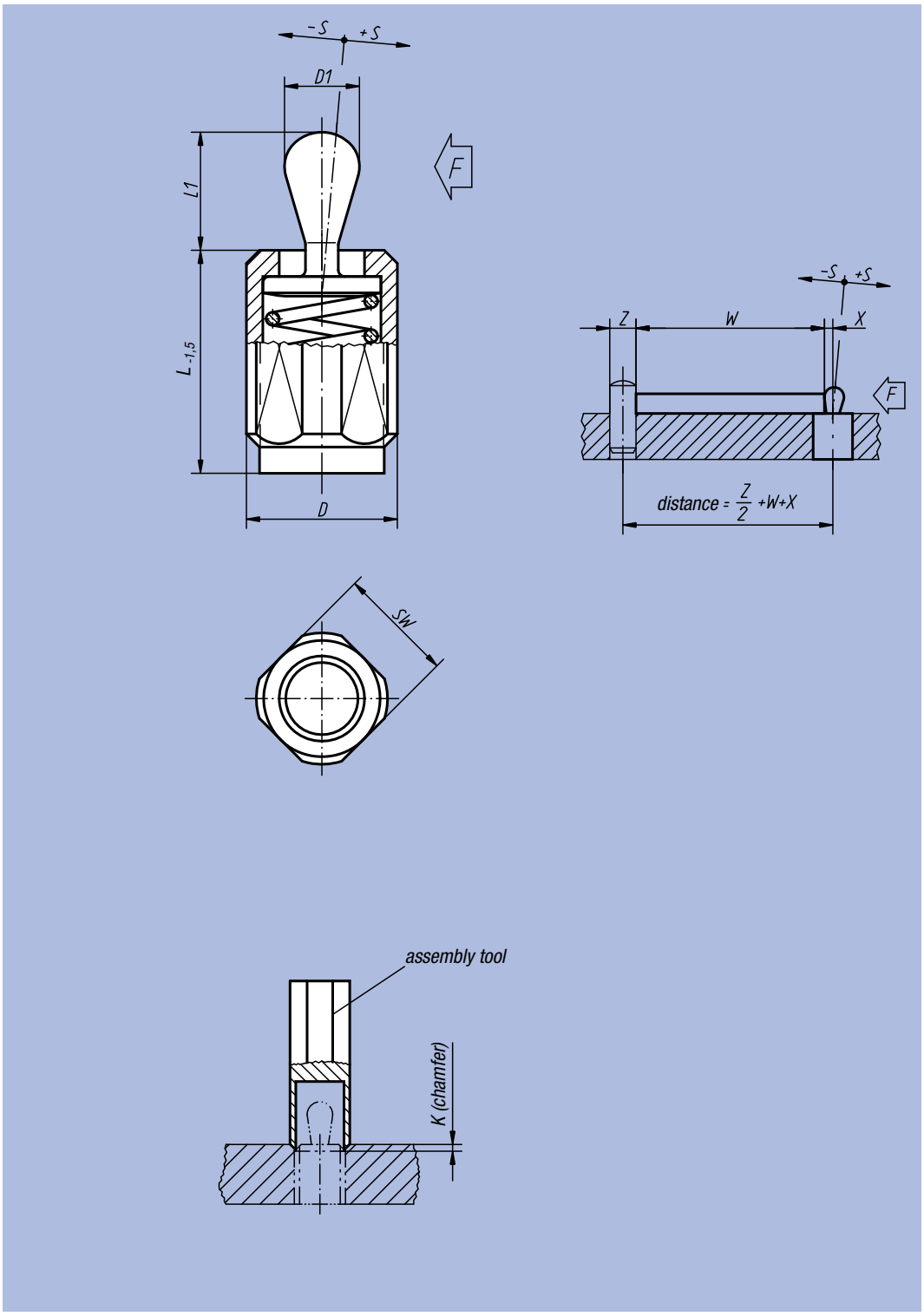

mounting example

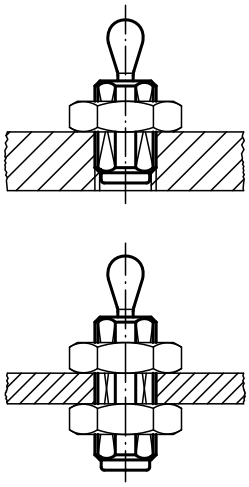

Lateral Spring Plungers

with threaded sleeve

Lateral Spring Plungers without seal, pressure pin in steel or in plastic

Order No.	Surface finish	L	L1	D	D1	±S	F approx. N	X	SW	K	Order No. assembly tool
03334-1020X	pressure pin in steel	11,5 / 19,0 / 26,5	6,7	M12	5	0,8	20	1,6	10	2x60°	03334-06
03334-1050X	pressure pin in steel	11,5 / 19,0 / 26,5	6,7	M12	5	0,8	50	1,6	10	2x60°	03334-06
03334-1100X	pressure pin in steel	11,5 / 19,0 / 26,5	6,7	M12	5	0,8	100	1,6	10	2x60°	03334-06
03334-1040X	pressure pin in steel	11,5 / 19,0 / 26,5	10,7	M12	6	1	40	1,8	10	2x60°	03334-06
03334-1075X	pressure pin in steel	11,5 / 19,0 / 26,5	10,7	M12	6	1	75	1,8	10	2x60°	03334-06
03334-1150X	pressure pin in steel	11,5 / 19,0 / 26,5	10,7	M 2	6	1	150	1,8	10	2x60°	03334-06
03334-1100X	pressure pin in steel	18,0 / 31,5 / 45,0	16,7	M18x1,5	10	1,6	100	3,2	16	2,5x60°	03334-10
03334-1200X	pressure pin in steel	18,0 / 31,5 / 45,0	16,7	M18x1,5	10	1,6	200	3,2	16	2,5x60°	03334-10
03334-1300X	pressure pin in steel	18,0 / 31,5 / 45,0	16,7	M18x1,5	10	1,6	300	3,2	16	2,5x60°	03334-10
03334-2020X	pressure pin in plastic	11,5 / 19,0 / 26,5	6,7	M12	5	0,8	20	1,6	10	2x60°	03334-06
03334-2050X	pressure pin in plastic	11,5 / 19,0 / 26,5	6,7	M12	5	0,8	50	1,6	10	2x60°	03334-06
03334-2040X	pressure pin in plastic	11,5 / 19,0 / 26,5	10,7	M12	6	1	40	1,8	10	2x60°	03334-06
03334-2075X	pressure pin in plastic	11,5 / 19,0 / 26,5	10,7	M12	6	1	75	1,8	10	2x60°	03334-06
03334-2100X	pressure pin in plastic	18,0 / 31,5 / 45,0	16,7	M18x1,5	10	1,6	100	3,2	16	2,5x60°	03334-10
03334-2200X	pressure pin in plastic	18,0 / 31,5 / 45,0	16,7	M18x1,5	10	1,6	200	3,2	16	2,5x60°	03334-10

Lateral Spring Plungers with seal, pressure pin in steel or in plastic

Order No.	Surface finish	L	L1	D	D1	±S	F approx. N	X	SW	K	Order No. assembly tool
03334-3020X	pressure pin in steel	11,5 / 19,0 / 26,5	6	M12	5	0,8	20	1,6	10	2x60°	03334-06
03334-3050X	pressure pin in steel	11,5 / 19,0 / 26,5	6	M12	5	0,8	50	1,6	10	2x60°	03334-06
03334-3100X	pressure pin in steel	11,5 / 19,0 / 26,5	6	M12	5	0,8	100	1,6	10	2x60°	03334-06
03334-3040X	pressure pin in steel	11,5 / 19,0 / 26,5	10	M12	6	1	40	1,8	10	2x60°	03334-06
03334-3075X	pressure pin in steel	11,5 / 19,0 / 26,5	10	M12	6	1	75	1,8	10	2x60°	03334-06
03334-3150X	pressure pin in steel	11,5 / 19,0 / 26,5	10	M12	6	1	150	1,8	10	2x60°	03334-06
03334-3100X	pressure pin in steel	18,0 / 31,5 / 45,0	16	M18x1,5	10	1,6	100	3,2	16	2,5x60°	03334-10
03334-3200X	pressure pin in steel	18,0 / 31,5 / 45,0	16	M18x1,5	10	1,6	200	3,2	16	2,5x60°	03334-10
03334-3300X	pressure pin in steel	18,0 / 31,5 / 45,0	16	M18x1,5	10	1,6	300	3,2	16	2,5x60°	03334-10
03334-4020X	pressure pin in plastic	11,5 / 19,0 / 26,5	6	M12	5	0,8	20	1,6	10	2x60°	03334-06
03334-4050X	pressure pin in plastic	11,5 / 19,0 / 26,5	6	M12	5	0,8	50	1,6	10	2x60°	03334-06
03334-4040X	pressure pin in plastic	11,5 / 19,0 / 26,5	10	M12	6	1	40	1,8	10	2x60°	03334-06
03334-4075X	pressure pin in plastic	11,5 / 19,0 / 26,5	10	M12	6	1	75	1,8	10	2x60°	03334-06
03334-4100X	pressure pin in plastic	18,0 / 31,5 / 45,0	16	M18x1,5	10	1,6	100	3,2	16	2,5x60°	03334-10
03334-4200X	pressure pin in plastic	18,0 / 31,5 / 45,0	16	M18x1,5	10	1,6	200	3,2	16	2,5x60°	03334-10

Lateral Spring Plungers

with threaded sleeve, without pressure pin



Material:
Sleeve and spring in steel;
receiving washer in steel,
hardened and black oxide finish

Surface finish:
Sleeve blue galvanized

Sample order:
nlm 03336-1100X**20**
(please also indicate size L)

L 11,5 = **L 12**
L 19 = **L 20**
L 26,5 = **L 27**
L 18 = **L 16**
L 31,5 = **L 29**
L 45 = **L 43**

Note:
Depending on the circumstances, the pressure pin can be fabricated by the customer and screwed into the threaded hole of the receiving washer. Utilizing stroke (S) and the corresponding length (L), lateral pressure (F) can be achieved.
In addition, form B is equipped with a seal to prevent chips and dirt from entering.

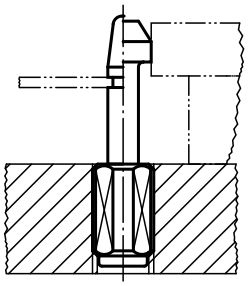

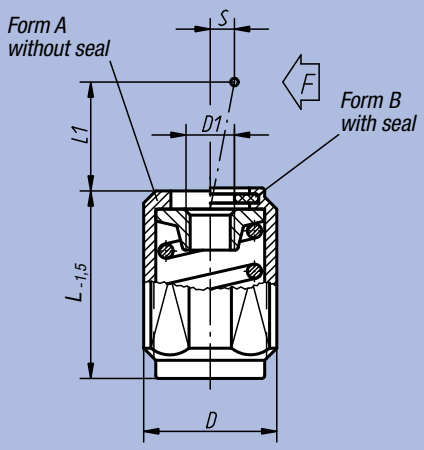

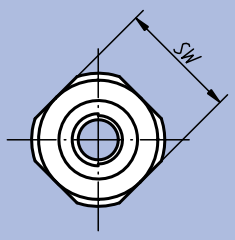

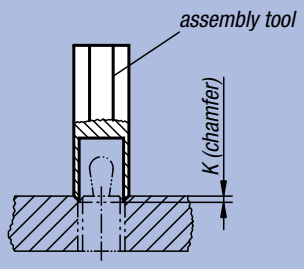

Order No. Form A	Order No. Form B	L	L1	D	D1	±S	F approx. N	SW	K	Order No. assembly tool
03336-1020X	03336-2020X	11,5 / 19,0 / 26,5	4	M12	M4	1,6	20	10	2x60°	03334-06
03336-1050X	03336-2050X	11,5 / 19,0 / 26,5	4	M12	M4	1,6	50	10	2x60°	03334-06
03336-1100X	03336-2100X	11,5 / 19,0 / 26,5	4	M12	M4	1,6	100	10	2x60°	03334-06
03336-1040X	03336-2040X	11,5 / 19,0 / 26,5	7,5	M12	M4	2	40	10	2x60°	03334-06
03336-1075X	03336-2075X	11,5 / 19,0 / 26,5	7,5	M12	M4	2	75	10	2x60°	03334-06
03336-1150X	03336-2150X	11,5 / 19,0 / 26,5	7,5	M12	M4	2	150	10	2x60°	03334-06
03336-1100X	03336-2100X	18,0 / 31,5 / 45,0	11,5	M18x1,5	M6	3,2	100	16	2,5x60°	03334-10
03336-1200X	03336-2200X	18,0 / 31,5 / 45,0	11,5	M18x1,5	M6	3,2	200	16	2,5x60°	03334-10
03336-1300X	03336-2300X	18,0 / 31,5 / 45,0	11,5	M18x1,5	M6	3,2	300	16	2,5x60°	03334-10

Spring Traction Units and Pressure Pads



Material:
Bush, spring bolt and spring all of steel.

Surface finish:
Body blue galvanized, spring bolts black oxide finish

Sample order:
nlm 03338-1202004

Note:
As a result of the bilateral thread in the spring bolt, many inserts are possible for individual applications, e.g. with prisms, studs, pendulum seats, handles, knobs, milled nuts, etc.

Installation:
To lock the threaded bush in position, we recommend a LOCTITE screw lock No. 97990-243.... .

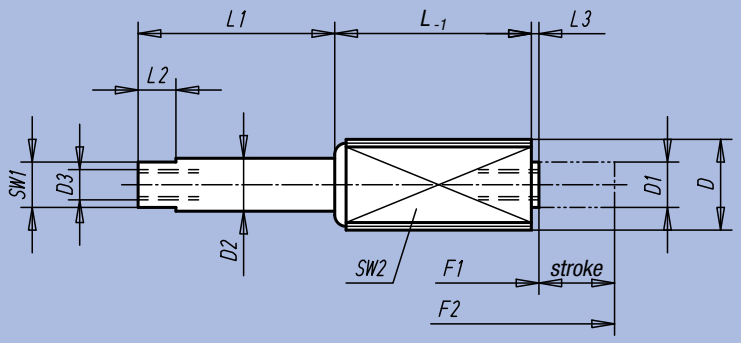

traction and pressure tightener

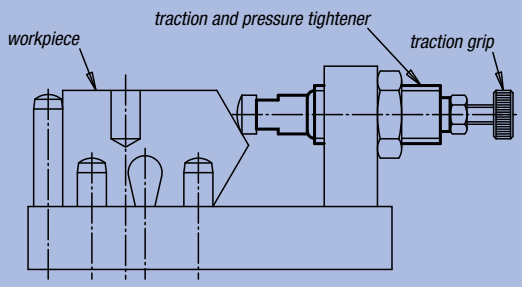

traction tightener as locking mechanism

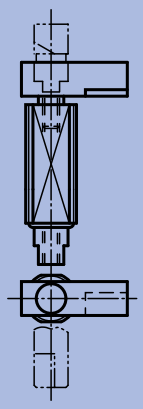

traction and pressure tightener as base carrier

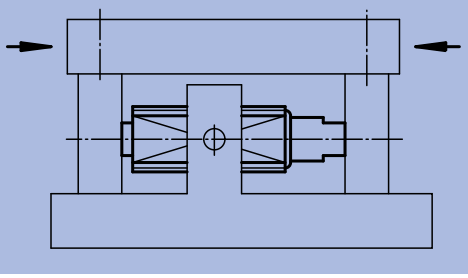

Application:

As **pressure tightener:**
The active force presses the part.

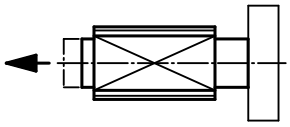

As **traction tightener:**
The active force tractions the part.

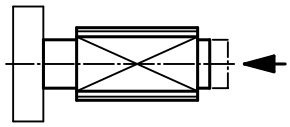

As **traction and pressure tightener:**
In this case the inner bolt has a fixed position. Threaded bush acts as the base carrier.
The active force tractions or presses the part in both directions.

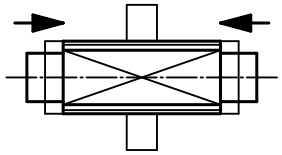

Order No.	D	D1	D2	D3	F1 (N)	F2 (N)	Stroke	L	L1	L2	L3	SW1	SW2 4-sided
03338-1202004	M12	6	7	M4x8	5	20	3,5	11	4,5	5	1	6	10
03338-1202006	M12	6	7	M4x8	5	20	6	18,5	7	5	1	6	10
03338-1202010	M12	6	7	M4x8	5	20	10	26	11	5	1	6	10
03338-1206003	M12	6	7	M4x8	15	60	3	11	4,5	5	1	6	10
03338-1206005	M12	6	7	M4x8	15	60	5	18,5	7	5	1	6	10
03338-1206008	M12	6	7	M4x8	15	60	8	26	11	5	1	6	10
03338-1212503	M12	6	7	M4x8	30	125	3	11	4,5	5	1	6	10
03338-1212505	M12	6	7	M4x8	30	125	5	18,5	7	5	1	6	10
03338-1212508	M12	6	7	M4x8	30	125	8	26	11	5	1	6	10
03338-1815004	M18 x 1,5	10	11	M6x12	50	150	4	17	6	6	2,5	9	16
03338-1815007	M18 x 1,5	10	11	M6x12	50	150	7	29,5	11,5	6	2,5	9	16
03338-1815013	M18 x 1,5	10	11	M6x12	50	150	12,5	45,5	16	6	2,5	9	16

Lateral Spring Plungers



Material:
Body in free-cutting steel;
ball in steel or stainless steel, hardened or delrin;
spring in stainless steel or in plastic

Surface finish:
Body black oxide finish,
ball natural finish

Sample order:
nlm 03340-410

Note:
The Lateral Spring Plunger must at least be pressed into the hole to dimension L3. It positions and presses small parts into fixtures and devices. If a mechanical machining process is executed on the workpiece, further clamping units might be necessary to clamp it. When storing fixtures and devices make sure that the plastic sping is not loaded.

The spring force is a statistical average.

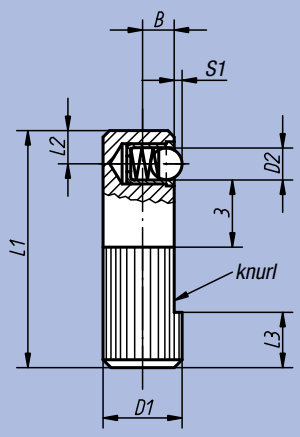

Form A
ball in stainless steel,
on one side

Form B
ball in delrin,
on one side

Form C
ball in steel,
spring in plastic, on one side

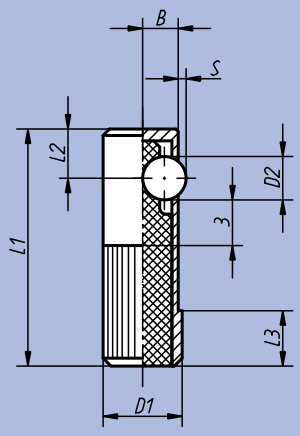

Form D
ball in steel,
spring in plastic, on both sides

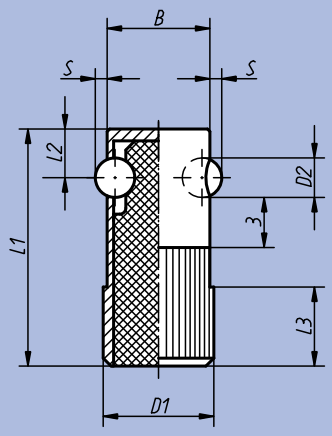

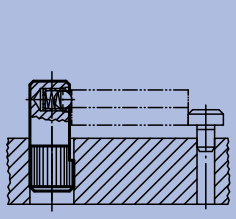

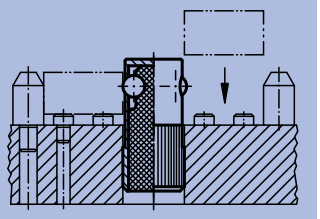

drift punch



Order No.	Form	D1	D2	L1	L2	L3	B	S	S1	Receiving hole H8	Spring force initial pressure N	Spring force final pressure N	kg
03340-008	A	8	3	25	3,6	6	3,2	-	0,7	8	3	7	0,009
03340-010	A	10	4	30	4,2	7	4	-	1	10	4	7	0,017
03340-012	A	12	5	35	4,8	9	5	-	1,5	12	6	12	0,029
03340-014	A	14	6,5	40	5,8	10	5,4	-	1,8	14	6	12	0,043
03340-108	B	8	3	25	3,6	6	3,2	-	0,9	8	3	7	0,009
03340-110	B	10	4	30	4,2	7	4	-	1,2	10	4	7	0,017
03340-112	B	12	5	35	4,8	9	5	-	1,5	12	6	12	0,029
03340-114	B	14	6,5	40	5,8	10	5,4	-	2	14	6	12	0,043
03340-410	C	10	5,5	30	7	8	4,5	1	-	10	50	160	0,009
03340-412	C	12	6,5	35	8	9	5,5	1,5	-	12	60	270	0,013
03340-414	C	14	8	40	9	10	6,5	2	-	14	100	380	0,019
03340-616	D	16	5,5	35	7	11	15	1,5	-	16	36	190	0,020
03340-618	D	18	6,5	40	8	12	17	1,8	-	18	38	270	0,027
03340-622	D	22	8	45	9	15	21	2,5	-	22	40	410	0,043

Cylindrical washer elements



Material:
Clamping jaw: steel;
pressure spring 1.4310;
clamping screw: quality class 8.8

Surface finish:
Clamping jaw black oxide finish;
clamping screw blue galvanised

Sample order:
nlm 03350-04

Note:
The cylindrical washer elements are the simple alternative to conventional clamping (slot and tensioning crew of cylindrical parts).
These components are ideally suited for the most varied materials (e.g., metals, plastics, wood…).
To loosen a tight clamping jaw, it simply has to be hit axially or extracted by means of an additional thread in the clamping jaw respectively in the hexagon socket of the socket head screw.
Spacer rings are available on request.

installation note:

insert cylindrical washer element

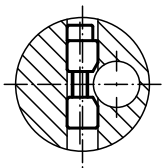

insert cylindrical part

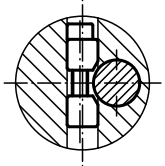

tighten

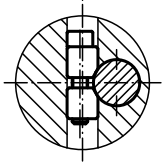

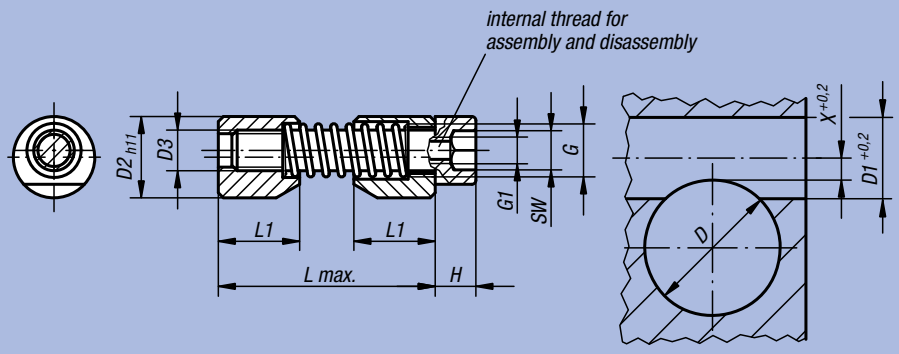

Application:

tighten axially and radially

tightening torque Mx

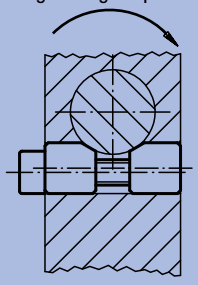

adjustment and tightening

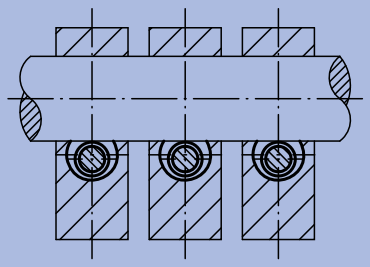

spacer rings K for deep holes

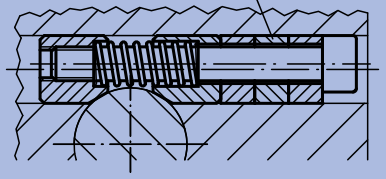

Holes also located far from the outer edge are also to be tightened using spacer rings and longer screws (without assembly thread).

assembly tool

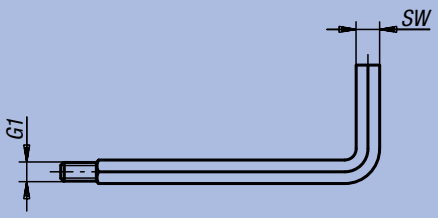

This tool is a special hexagon screwdriver with a threaded pin. To position respectively to loosen the cylindrical washer element, the screwdriver has to be screwed in the thread G1 of the socket head screw.

Order No.	D	D1	D2	D3	L	L1	X	G	G1	H	K	SW	Mx Nm	g	Order No. assembly tool
03350-04	6- 10	8	8	M4	27	8	2,8	M5	M2,5	4	10	3	max. 20	6	03350-904
03350-05	10- 15	10	10	M5	33	10	3,3	M6	M3	5	10	4	max. 45	12	03350-905
03350-06	15- 20	12	12	M6	39	12	3,5	M7	M4	6	10	5	max. 100	21	03350-906
03350-08	20- 30	16	16	M8	46	16	4	M10	M5	8	10	6	max. 170	52	03350-908
03350-10	30- 40	20	20	M10	53	20	4,8	M12	M6	10	15	8	max. 290	98	03350-910
03350-12	40- 60	25	25	M12	70	25	5,6	M14	M8	12	15	10	max. 450	183	03350-912
03350-16	60-125	30	30	M16	81	30	7,9	M18	M10	16	15	14	max. 650	344	03350-916

Notes:

04000

Clamps
Clamping Devices



Adjustable Straps



Material:
Tempered steel 1.1191
Surface finish:
Black oxide finish
Sample order:
nlm 04010-101
Note:
Suitable Thrust Pins and Adjustable Thrust Bolts, see 02130 and 02150.

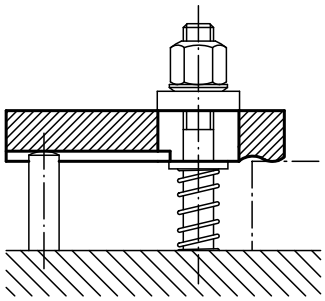

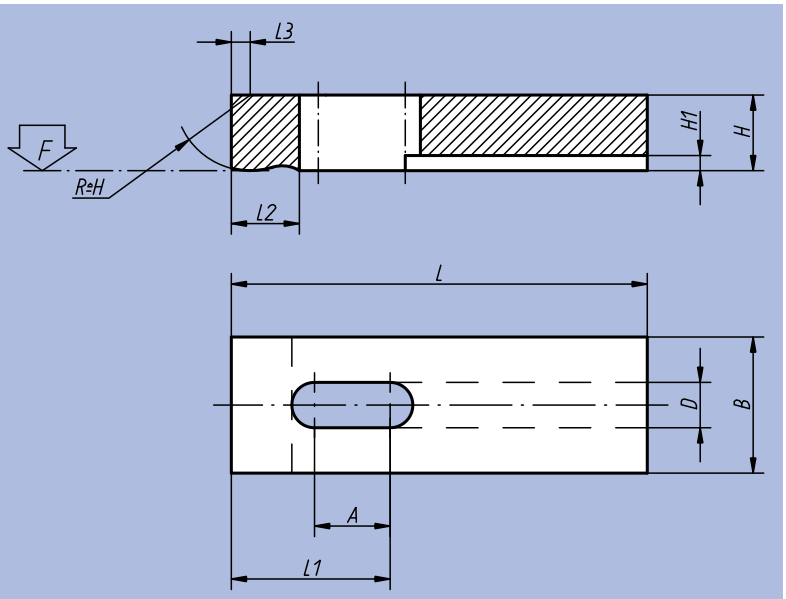

Order No.	A	B	D	H	H1	L	L1	L2	L3	F kN	kg
04010-05	8	12	5,5	8	3	32	14	8	1,2	3,42	0,020
04010-051	13	12	5,5	8	3	50	23	8	1,2	3,42	0,030
04010-06	10	16	7	10	3	40	17	10	1,6	4,82	0,040
04010-061	17	16	7	10	3	63	29	10	1,6	4,82	0,060
04010-08	12	20	9	12	4	50	22	12	2	8,77	0,090
04010-081	21	20	9	12	4	80	37	12	2	8,77	0,120
04010-10	16	25	11	16	4,5	63	28	16	2,5	13,9	0,150
04010-101	26	25	11	16	4,5	100	46	16	2,5	13,9	0,220
04010-12	20	32	14	20	5	80	35	20	3	20,2	0,290
04010-121	33	32	14	20	5	125	58	20	3	20,2	0,460
04010-14	25	40	16	25	6	100	44	25	4	27,6	0,620
04010-141	42	40	16	30	6	160	74	25	4	27,6	0,980
04010-16	42	50	18	30	6	160	73	32	5	37,8	1,600
04010-20	52	60	22	30	8	200	92	40	6	58,8	2,700

Pivoting Clamps

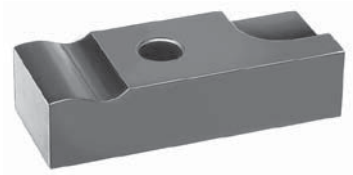

Material:
Tempered steel 1.1191
Surface finish:
Black oxide finish
Sample order:
nlm 04030-10
Note:
Recommended clamp supports: 02130 and 02150.

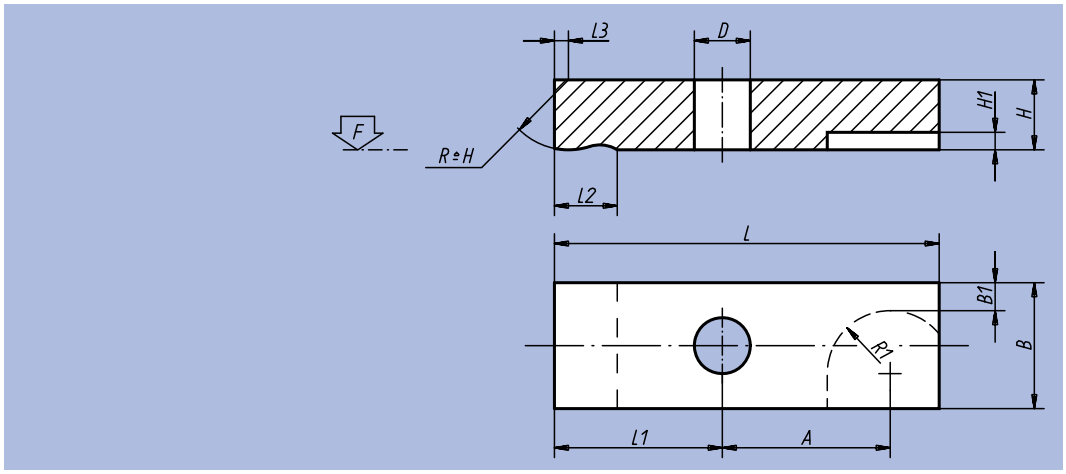

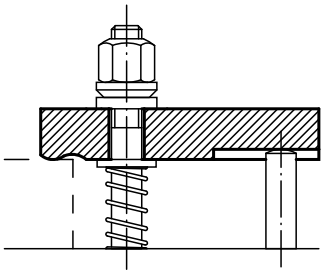

Order No.	L	L1	L2	L3	B	B1	H	H1	D	A	R1	F kN	kg
04030-05	32	14	8	1,2	12	2,5	8	3	5,5	14	7	3,42	0,020
04030-06	40	17	10	1,6	16	4	10	3	7	18	8	4,82	0,040
04030-08	50	22	12	2	20	5	12	4	9	22	10	8,77	0,090
04030-10	63	28	16	2,5	25	6,5	16	4	11	27	12	13,9	0,150
04030-12	80	35	20	3	32	9	20	5	14	35	14	20,2	0,300
04030-14	100	44	25	4	40	12	25	6	16	44	16	27,6	0,620
04030-16	125	55	32	5	50	16	30	6	18	54	18	37,8	1,520
04030-20	160	75	40	6	60	20,5	30	8	22	65	22	58,8	2,650

Adjustable Clamps



Material:
Tempered steel 1.1191
Surface finish:
Black oxide finish
Sample order:
nlm 04050-08
Note:
With Concave Washers, use the wide series 07420 Form G.

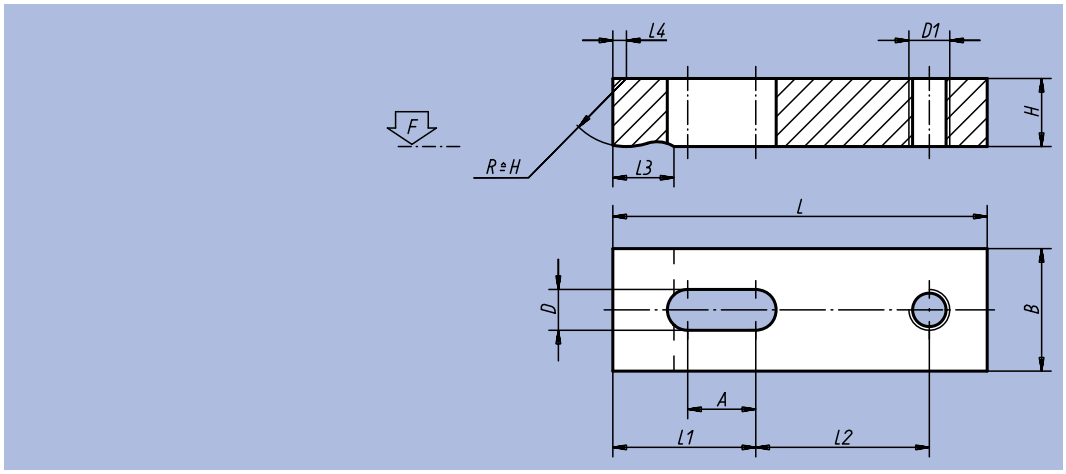

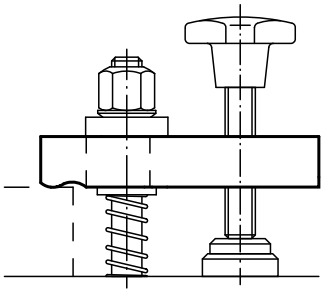

Order No.	L	L1	L2	L3	L4	B	H	D	D1	A	F kN	kg
04050-05	40	18	18	8	1,2	12	8	5,5	M6	10	3,42	0,020
04050-06	50	22	23	10	1,6	16	10	7	M6	12	4,82	0,040
04050-08	63	28	29	12	2	20	12	9	M8	16	8,77	0,090
04050-10	80	36	36	16	2,5	25	16	11	M10	20	13,9	0,150
04050-12	100	45	45	20	3	32	20	14	M12	25	20,2	0,300
04050-14	125	57	56	25	4	40	25	16	M14	32	27,6	0,620
04050-16	160	72	72	32	5	50	30	18	M16	40	37,8	1,520
04050-20	200	90	90	40	6	60	30	22	M20	50	58,8	2,650

Stepped Clamps

steel or aluminium

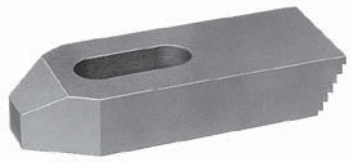

Material:
Tempered steel or EN AW-7022
Surface finish:
Painted, aluminium natural finish
Sample order:
nlm 04070-12
Note:
For use only with Notched Block 02270.

With Concave Washers 07420, use Form G.

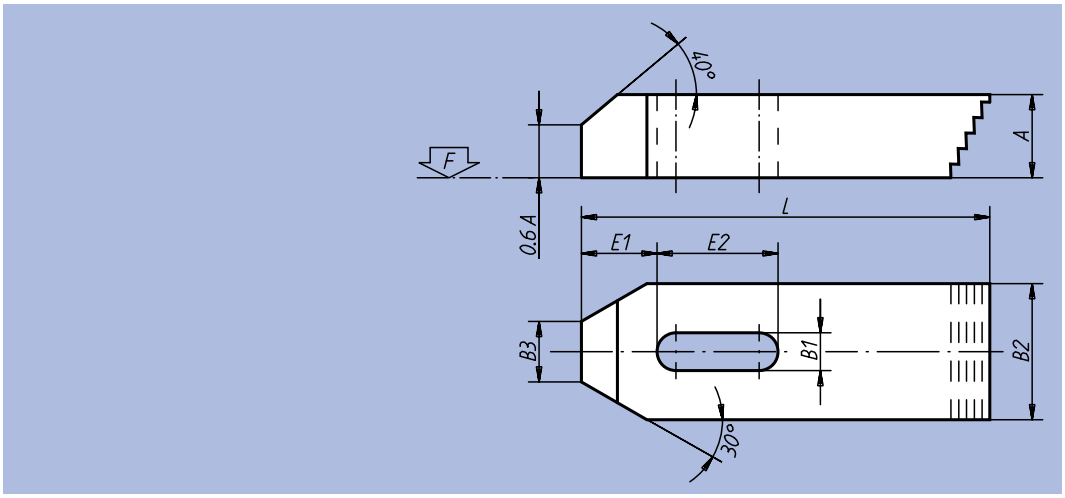

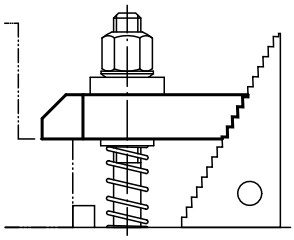

Order No. Material steel	Order No. Material aluminium	L	A	B1	B2	B3	E1	E2	F kN	for screw
04070-06	04070-206	50	10	7	20	8	10	20	4,82	M6
04070-08	04070-208	60	12	9	25	10	13	22	8,77	M8
04070-10	04070-210	80	15	11	30	12	15	30	13,9	M10
04070-12	04070-212	100	20	14	40	14	21	40	20,2	M12/M14
04070-16	04070-216	125	25	18	50	18	26	45	37,8	M16/M18
04070-20	04070-220	160	30	22	60	22	30	60	58,8	M20/M22
04070-24	04070-224	200	30	26	70	26	35	80	84,7	M24

Application: jig using NORELEM parts

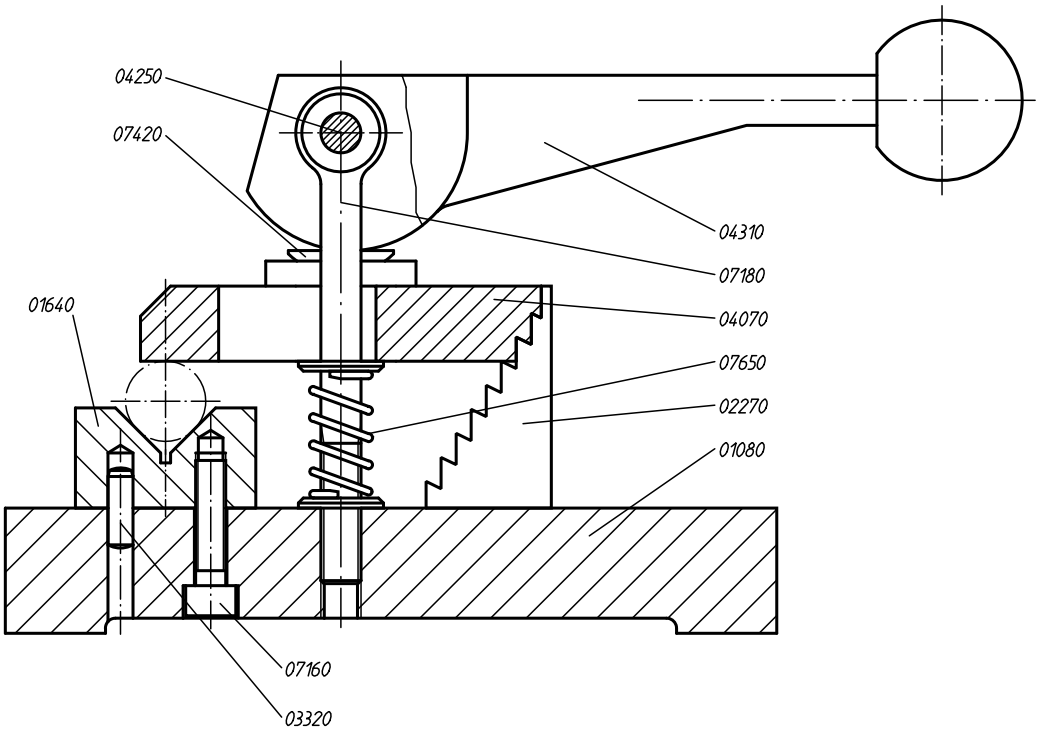

Plain Clamps

DIN 6314, steel or aluminium



Material:
Tempered steel or EN AW-7022
Surface finish:
Painted, aluminium natural finish
Sample order:
nlm 04080-16
Note:
With Concave Washers, use the wide series 07420 Form G.

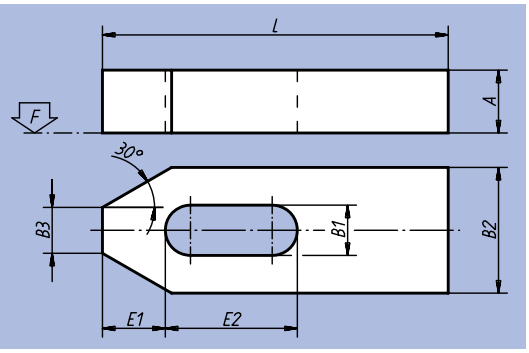

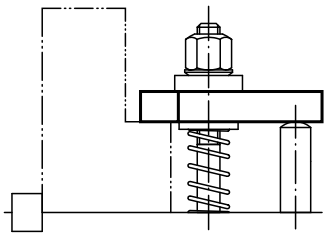

Order No. Material steel	Order No. Material aluminium	L	A	B1	B2	B3	E1	E2	F kN	for screw
04080-06	04080-206	50	10	7	20	8	10	20	4,82	M6
04080-08	04080-208	60	12	9	25	10	13	22	8,77	M8
04080-10	04080-210	80	15	11	30	12	15	30	13,9	M10
04080-12	04080-212	100	20	14,5	40	14	21	40	20,2	M12/M14
04080-14	04080-214	125	20	15	40	14	21	50	20,2	M12/M14
04080-16	04080-216	125	25	19	50	18	26	45	37,8	M16/M18
04080-18	04080-218	160	25	19	50	18	26	65	37,8	M16/M18
04080-20	04080-220	160	30	23	60	22	30	60	58,8	M20/M22
04080-201	04080-2201	200	30	23	60	22	30	80	58,8	M20/M22
04080-24	04080-224	200	30	26	70	26	35	80	84,7	M24
04080-241	04080-2241	250	35	26	70	26	35	105	84,7	M24
04080-30	04080-230	250	40	34	80	34	45	100	135	M30/M32
04080-301	04080-2301	315	50	34	80	34	45	130	135	M30/M32

Straps

with flattened ball

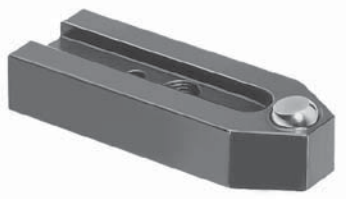

Material:
Straps: tempered steel, balls: bearing steel
Surface finish:
Strap black oxide finish;
ball hardened and polished
Sample order:
nlm 04081-08
Note:
With Concave Washers, use the wide series 07420 Form G.
Ball is protected against torsion.

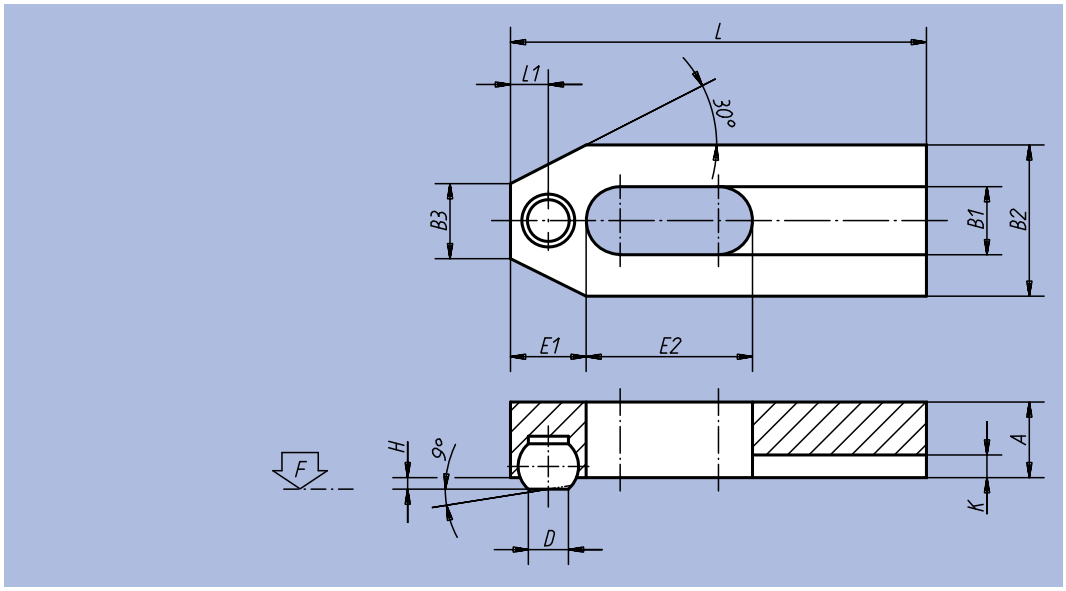

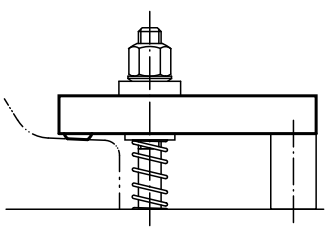

Order No.	L	L1	A	B1	B2	B3	D	H	K	Ball-Ø	E1	E2	F kN	for screw	kg
04081-06	50	5	10	7	20	8	5,5	1,6	2,5	8,5	10	20	4,82	M6	0,060
04081-08	60	6,5	12	9	25	10	7,2	2	3	10	13	22	8,77	M8	0,110
04081-10	80	7,5	15	11	30	12	8,6	2,7	3,5	12	15	30	13,9	M10	0,220
04081-12	125	10,5	20	13	40	14	10,5	3,5	4	16	21	50	20,2	M12	0,600

Swan-neck Clamps Narrow

steel



Material:
Tempered steel
Surface finish:
Heat-treated and black oxide finish
Sample order:
nlm 04088-06010
Note:
The fine flat nose makes it possible toclamp and machine small pieces. With Concave Washers, use the wide series 07420 Form G.

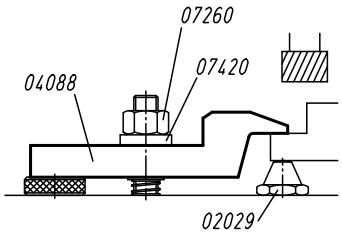

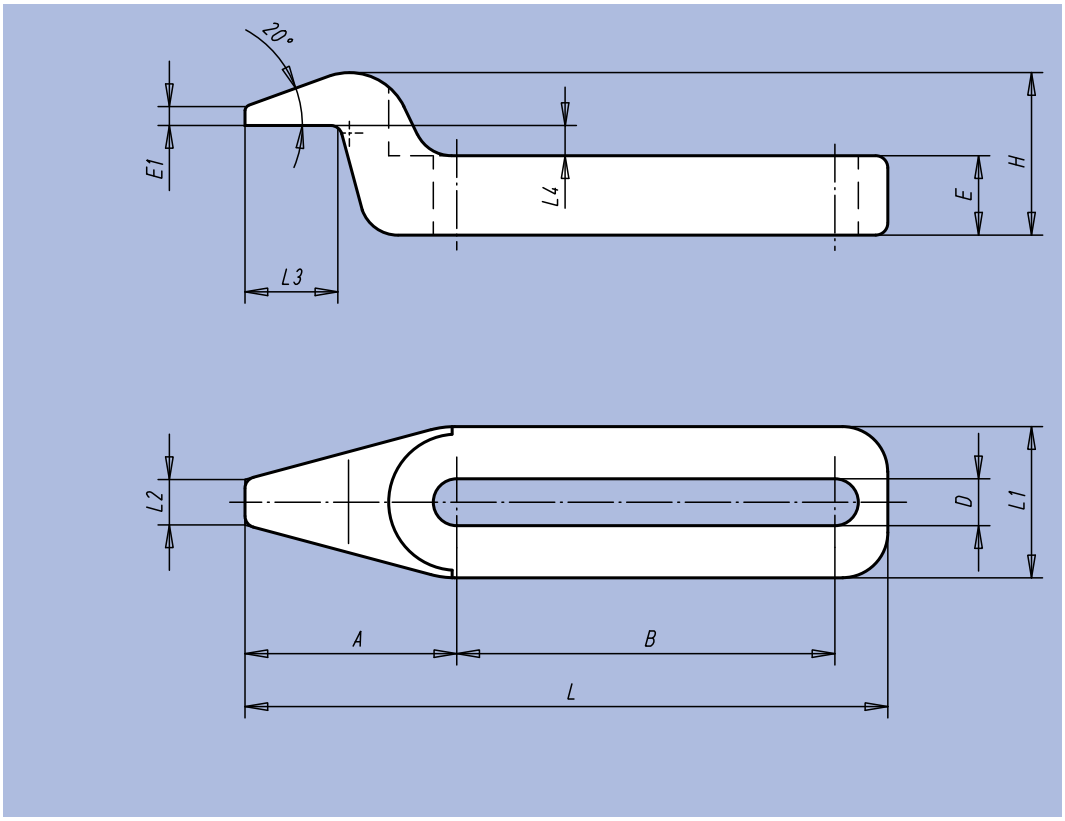

Order No.	A	B	D	E	E1	H	L	L1	L2	L3	L4	Clamping force kN
04088-06005	28	32	6,2	7,5	2,5	18,5	67	20	6	12,5	4	4,82
04088-06010	28	50	6,2	10,5	2,5	21,5	85	20	6	12,5	4	4,82
04088-08005	28	32	8,2	7,5	2,5	18,5	67	20	6	12,5	4	8,77
04088-08010	28	50	8,2	10,5	2,5	21,5	85	20	6	12,5	4	8,77
04088-10005	45	50	10,2	12	4	30	105	30	10	20	6	13,9
04088-10010	45	80	10,2	17	4	35	135	30	10	20	6	13,9
04088-12005	45	50	12,2	12	4	30	105	30	10	20	6	20,2
04088-12010	45	80	12,2	17	4	35	135	30	10	20	6	20,2
04088-16005	72	80	16,2	19	7	48	168	48	16	32	9,5	37,8
04088-16010	72	128	16,2	27	7	56	216	48	16	32	9,5	37,8
04088-20005	72	80	20,2	19	7	48	168	48	16	32	9,5	58,8
04088-20010	72	128	20,2	27	7	56	216	48	16	32	9,5	58,8

Swan-neck Clamps Wide

to DIN 6316, steel or aluminium



Material:
Tempered steel or EN AW-7022
Surface finish:
Painted, aluminium natural finish
Sample order:
nlm 04090-10
Note:
With Concave Washers, use the wide series 07420 Form G.

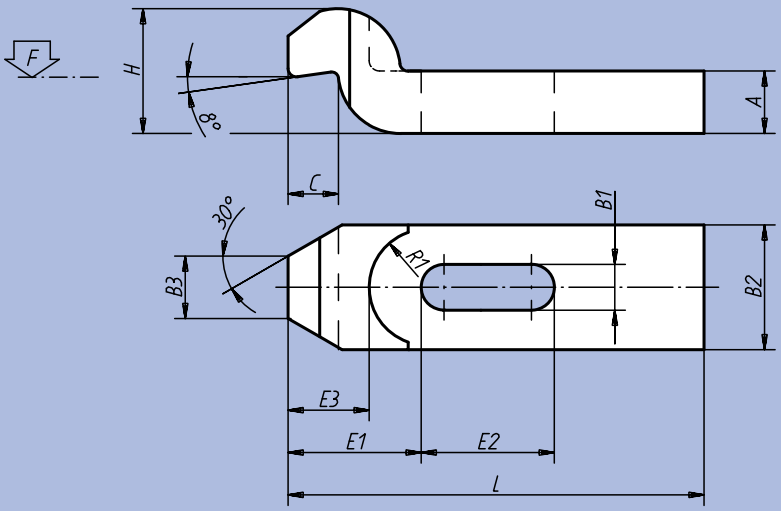

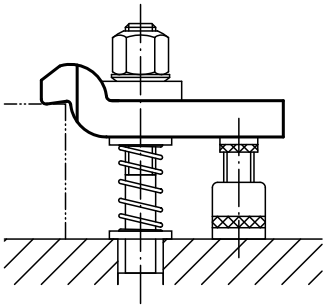

Order No. Material steel	Order No. Material aluminium	L	B1	B2	B3	H	A	C	E1	E2	E3	R1	F kN	for screw
04090-06	04090-206	60	7	20	10	20	10	8	20	20	14	11	4,82	M6
04090-08	04090-208	80	9	25	12	24	12	9	25	25	17	14	8,77	M8
04090-10	04090-210	100	11	30	15	30	15	12	32	32	22	18	13,9	M10
04090-12	04090-212	125	14	40	20	40	20	16	40	40	28	20	20,2	M12/M14
04090-16	04090-216	125	18	50	25	46	25	20	49	40	38	25	37,8	M16/M18
04090-161	04090-2161	160	18	50	25	46	25	20	49	50	38	25	37,8	M16/M18
04090-20	04090-220	160	22	60	30	60	30	24	55	55	40	28	58,8	M20/M22
04090-201	04090-2201	200	22	60	30	60	30	24	55	70	40	28	58,8	M20/M22
04090-24	04090-224	200	26	70	35	70	35	28	72	60	54	34	84,7	M24
04090-241	04090-2241	250	26	70	35	70	35	28	72	80	54	34	84,7	M24
04090-30	04090-230	250	34	80	40	80	40	40	91	80	72	40	135	M30/M32
04090-301	04090-2301	315	34	80	40	100	50	40	91	100	72	40	135	M30/M32

Goose-Neck Straps

with long slot



Material:
Tempered steel 1.7225

Surface finish:
Heat-treated at 1000 N/mm², black oxide finish

Sample order:
nlm 04100-10

Note:
Goose-Neck Straps with long slot are also used for Quick-Acting Clamps 04200.

Goose-Neck Strap 04100-01 (0,5 kg)

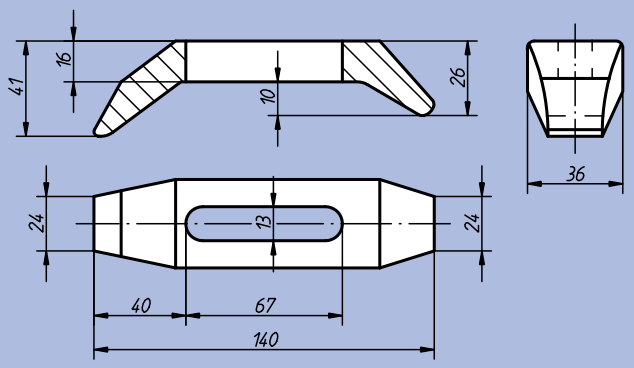

Goose-Neck Strap 04100-05 (0,48 kg)

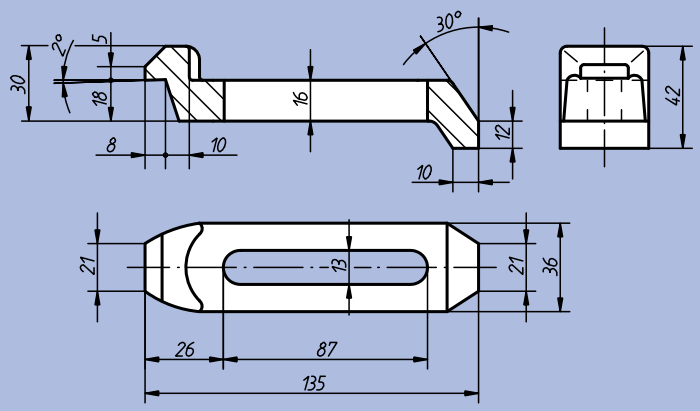

Goose-Neck Strap 04100-10 (0,35 kg)

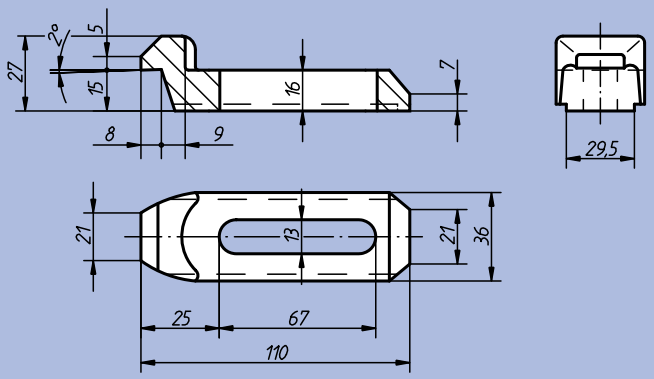

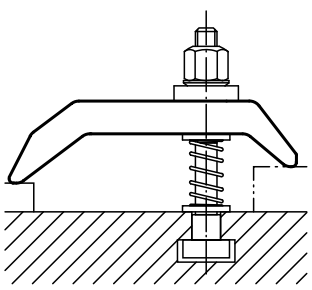

Forked Clamps

to DIN 6315, steel or aluminium



Material:
Tempered steel or EN AW-7022
Surface finish:
Painted, aluminium natural finish
Sample order:
nlm 04110-06
Note:
With Concave Washers, use the wide series 07420 Form G.

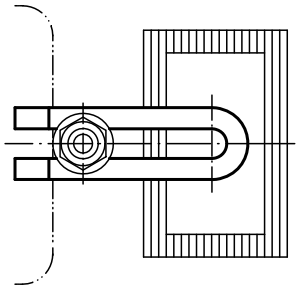

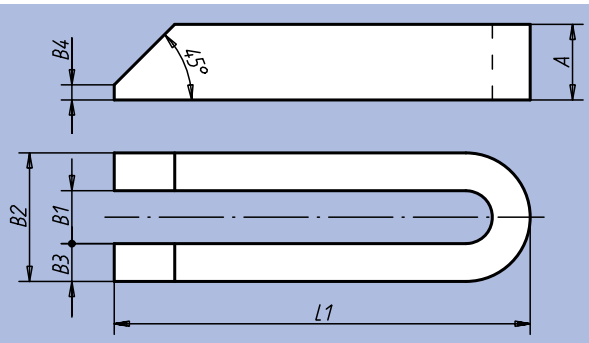

in aluminium version

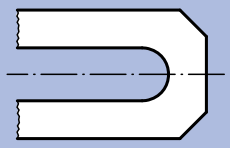

Order No.	Material	L1	A	B1	B2	B3	B4	for screw	kg
04110-06	steel	60	12	7	19	6	3	M6	0,060
04110-08	steel	80	15	9	25	8	4	M8	0,140
04110-10	steel	100	20	11	31	10	5	M10	0,300
04110-12	steel	125	25	14	39	12	6	M12/M14	0,570
04110-121	steel	160	25	14	39	12	6	M12/M14	0,730
04110-122	steel	200	25	14	38	12	6	M12/M14	0,910
04110-16	steel	160	30	18	48	15	8	M16/M18	1,080
04110-161	steel	200	30	18	48	15	8	M16/M18	1,360
04110-162	steel	250	40	18	48	15	10	M16/M18	2,250
04110-20	steel	200	40	22	52	15	10	M20/M22	1,800
04110-201	steel	250	40	22	63	20	10	M20/M22	3,000
04110-202	steel	315	40	22	62	20	10	M20/M22	3,850
04110-24	steel	200	40	26	66	20	10	M24	2,400
04110-241	steel	250	40	26	66	20	10	M24	3,000
04110-242	steel	315	40	26	66	20	10	M24	3,850
04110-301	steel	250	50	34	74	20	12	M30/M32	4,750
04110-30	steel	315	50	34	74	20	12	M30/M32	4,750
04110-302	steel	400	50	34	74	20	12	M30/M32	6,100
04110-40	steel	400	60	40	100	30	12	M36	11,000
04110-401	steel	600	60	40	100	30	12	M36	16,500
04110-206	aluminium	60	12	7	19	6	3	M6	0,020
04110-208	aluminium	80	15	9	25	8	4	M8	0,050
04110-210	aluminium	100	20	11	31	10	5	M10	0,105
04110-212	aluminium	125	25	14	39	12	6	M12/M14	0,200
04110-2121	aluminium	160	28	14	39	12	6	M12/M14	0,256
04110-216	aluminium	160	30	18	48	15	8	M16/M18	0,378
04110-2161	aluminium	200	36	18	48	15	8	M16/M18	0,477
04110-220	aluminium	200	40	22	52	15	10	M20/M22	0,630
04110-2201	aluminium	250	40	22	63	20	10	M20/M22	1,052
04110-224	aluminium	200	40	26	66	20	10	M24	0,842
04110-2241	aluminium	250	40	26	66	20	10	M24	1,052
04110-230	aluminium	315	50	34	74	20	12	M30/M32	1,666

Stepped Clamps

forked with nose, steel and aluminium



Material:
Tempered steel or EN AW-7022

Surface finish:
Painted

Sample order:
nlm 04130-12

Note:
With Concave Washers, use the wide series 07420 Form G.

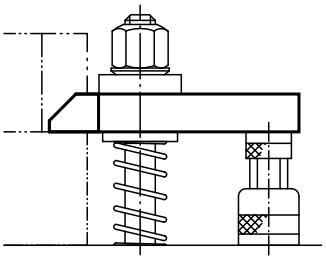

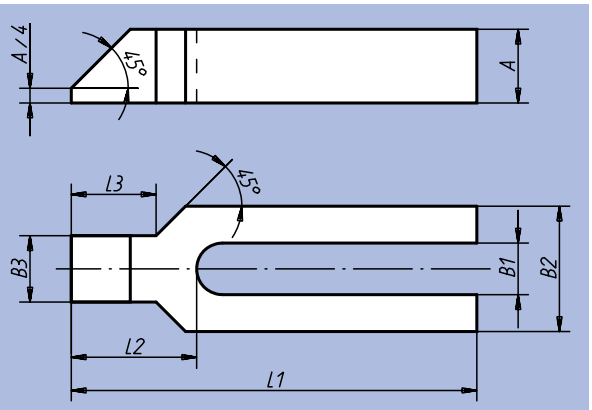

Order No.	Material	L1	A	B1	B2	B3	L2	L3	for screw	kg
04130-08	steel	100	15	9	30	16	32	18	M8	0,240
04130-10	steel	125	20	11	30	20	38	24	M10	0,380
04130-12	steel	160	25	14	40	24	47	30	M12/M14	0,800
04130-121	steel	200	25	14	40	24	47	30	M12/M14	1,000
04130-16	steel	200	30	18	50	28	57	36	M16/M18	1,500
04130-161	steel	250	30	18	50	28	57	36	M16/M18	1,850
04130-20	steel	250	40	22	60	35	68	45	M20/M22	2,900
04130-201	steel	315	40	22	60	35	68	45	M20/M22	3,600
04130-24	steel	250	40	26	70	43	83	56	M24	3,400
04130-241	steel	315	40	26	70	43	83	56	M24	4,300
04130-30	steel	315	50	34	80	50	88	56	M30/M32	6,000
04130-301	steel	400	50	34	80	50	88	56	M30/M32	7,300
04130-208	aluminium	100	15	9	30	16	32	18	M8	0,084
04130-210	aluminium	125	20	11	30	20	38	24	M10	0,133
04130-212	aluminium	160	28	14	40	24	47	30	M12/M14	0,280
04130-2121	aluminium	200	36	14	40	24	47	30	M12/M14	0,357
04130-216	aluminium	200	36	18	50	28	57	36	M16/M18	0,526
04130-2161	aluminium	250	40	18	50	28	57	36	M16/M18	0,649
04130-220	aluminium	250	40	22	60	35	68	45	M20/M22	1,017
04130-2201	aluminium	315	48	22	60	35	68	45	M20/M22	1,263
04130-224	aluminium	250	40	26	70	43	83	56	M24	1,192
04130-2241	aluminium	315	48	26	70	43	83	56	M24	1,508
04130-230	aluminium	315	50	34	80	50	88	56	M30/M32	2,105
04130-2301	aluminium	400	50	34	80	50	88	56	M30/M32	2,561

Swan-neck Clamps

continuously adjustable



Material:
Steel

Surface finish:
Forged and tempered, painted;
bolts: quality class 8.8

Sample order:
nlm 04140-010

Note:
The infinitely variable tension claw quickly bridges the various tension levels with no additional base and takes up little space on the machine-tool table. It is designed to take the greatest stress and is especially suited to tightening cutting and die-stamping tools.

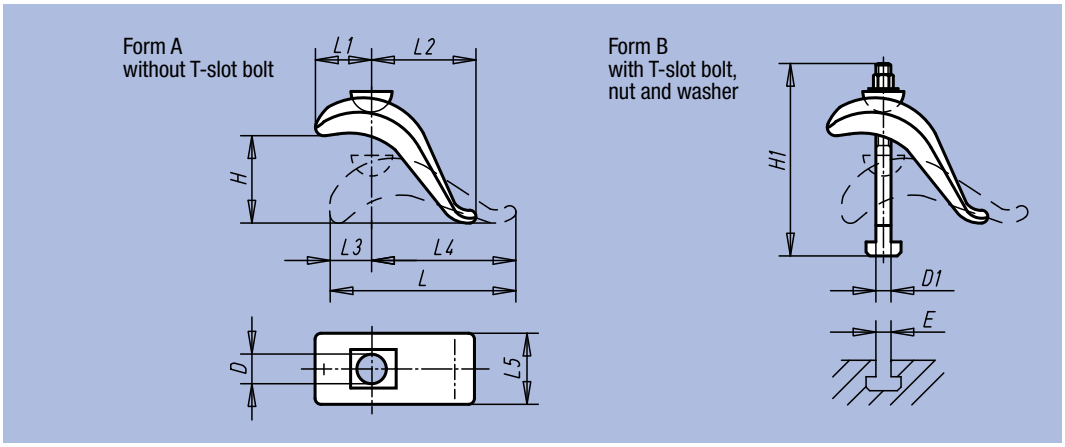

Order No.	Form	D	D1	E	H	H1	L	L1	L2	L3	L4	L5	Clamping force kN	□ kg
04140-010	A	17	-	-	75	-	140	55	60	30	110	50	20,2	0,900
04140-020	A	21	-	-	85	-	175	70	80	40	135	60	37,8	1,600
04140-030	B	17	M12	12	50	125	140	55	60	30	110	50	20,2	1,070
04140-040	B	17	M12	14	50	125	140	55	60	30	110	50	20,2	1,080
04140-050	B	17	M16	16	75	160	140	55	60	30	110	50	37,8	1,270
04140-060	B	17	M16	18	75	160	140	55	60	30	110	50	37,8	1,280
04140-080	B	21	M16	16	65	160	175	70	80	40	135	60	37,8	1,970
04140-100	B	21	M16	18	65	160	175	70	80	40	135	60	37,8	1,990
04140-120	B	21	M20	22	85	200	175	70	80	40	135	60	58,8	2,370

Notes:

Forked straps, cylindrical clamp

steel and aluminium DIN 6315 C

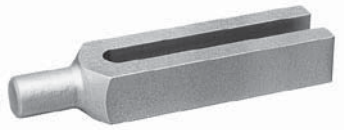

Material:
Tempered steel or EN AW-7022

Surface finish:
Painted, aluminium natural finish

Sample order:
nlm 04150-161

Note:
With Concave Washers, use the wide series 07420 Form G.

Statements on clamping force are only valid for steel versions.

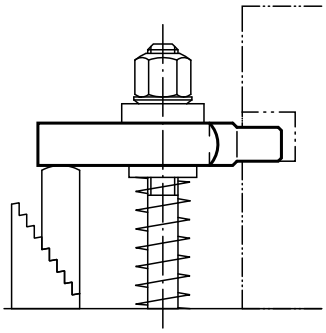

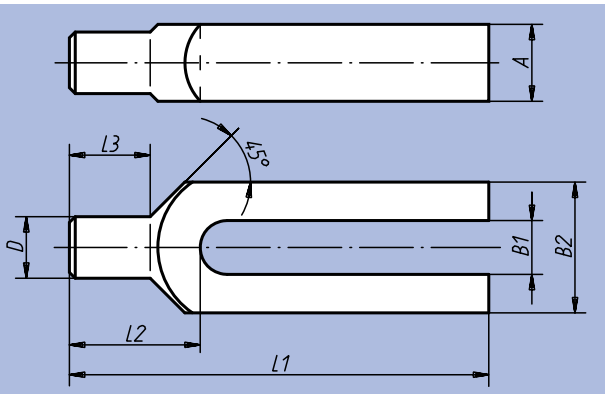

Order No.	Material	L1	A	B1	B2	D	L2	L3	for screw	Clamping force kN	kg
04150-08	steel	100	15	9	30	12	30	18	M8	8,77	0,220
04150-10	steel	125	20	11	30	16	36	24	M10	13,9	0,350
04150-12	steel	160	25	14	40	20	45	30	M12/M14	20,2	0,750
04150-121	steel	200	25	14	40	20	45	30	M12/M14	20,2	0,950
04150-16	steel	200	30	18	50	24	55	36	M16/M18	37,8	1,400
04150-161	steel	250	30	18	50	24	55	36	M16/M18	37,8	1,750
04150-20	steel	250	40	22	60	30	65	45	M20/M22	58,8	2,700
04150-201	steel	315	40	22	60	30	65	45	M20/M22	58,8	3,400
04150-208	aluminium	100	15	9	30	12	30	18	M8	-	0,077
04150-210	aluminium	125	20	11	30	16	36	24	M10	-	0,122
04150-212	aluminium	160	28	14	40	20	45	30	M12/M14	-	0,350
04150-2121	aluminium	200	32	14	40	20	45	30	M12/M14	-	0,335
04150-216	aluminium	200	30	18	50	24	55	36	M16/M18	-	0,492
04150-2161	aluminium	250	30	18	50	24	55	36	M16/M18	-	0,614
04150-220	aluminium	250	40	22	60	30	65	45	M20/M22	-	0,947
04150-2201	aluminium	315	48	22	60	30	65	45	M20/M22	-	1,195

Cam Clamps



Material:
Tempered steel 1.1191
Surface finish:
Tempered and black oxide finish
Sample order:
nlm 04170-12
Note:
Fitting axial bolts 04250. Eccentric lever see 04290. Form G is to be used when using conical sockets 07420.

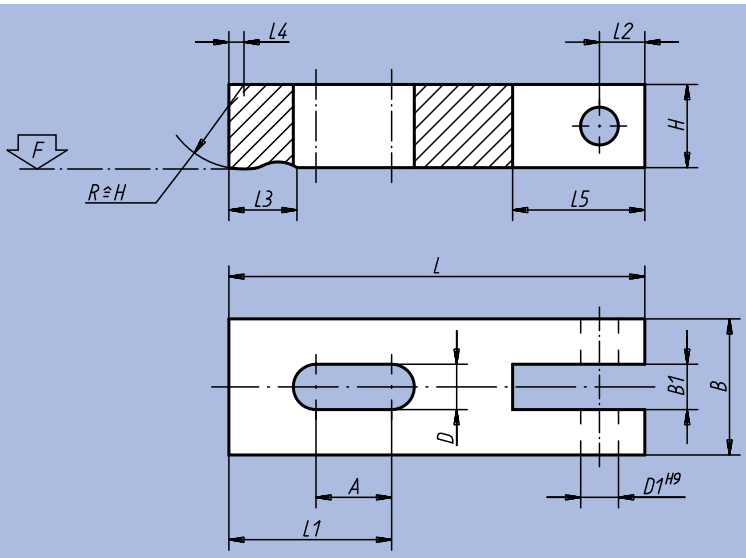

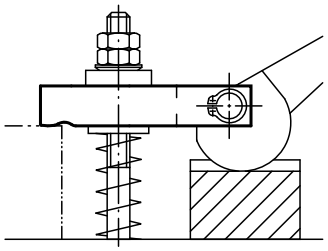

Order No.	L	L1	L2	L3	L4	L5	B	B1	H	D	D1	A	F max. kN	kg
04170-08	63	28	8	12	2	24	25	9,5	16	9	8	16	8,77	0,090
04170-10	80	36	10	16	2,5	29	32	12,5	20	11	10	20	13,9	0,130
04170-12	100	45	12	22	3	36	40	14,5	25	14	12	25	20,2	0,270

Mini Clamps



Material:
Steel
Surface finish:
Black oxide finish
Sample order:
nlm 04185-012
Note:
Two work-pieces can be tensioned simulutaneously using the mini grip yoke.

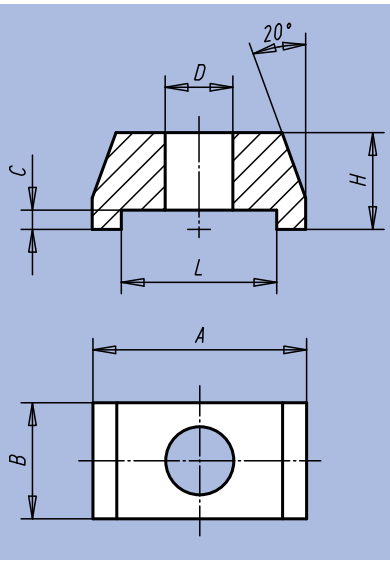

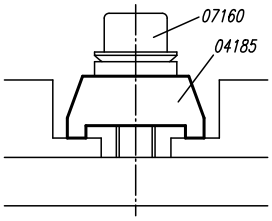

Order No.	A	B	C	D	H	L	Clamping force kN	kg
04185-006	22	12	2	7	10	16	4,82	0,015
04185-008	22	12	2	9	10	16	8,77	0,015
04185-010	35	19	3	11	15	24	13,9	0,050
04185-012	35	19	3	13	15	24	20,2	0,050
04185-016	50	29	5	17	25	36	37,8	0,200

Double-Ended Clamps



Material:
Tempered steel 1.1191
Surface finish:
Black oxide finish
Sample order:
nlm 04190-12

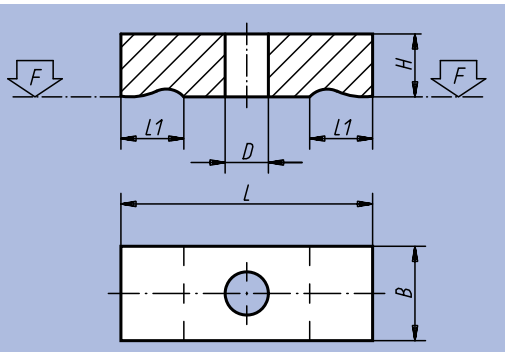

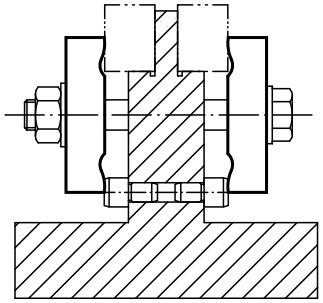

Order No.	L	L1	B	H	D	F kN	kg
04190-05	32	8	12	8	5,5	3,42	0,020
04190-06	40	10	16	10	7	4,82	0,040
04190-08	50	12	20	12	9	8,77	0,090
04190-10	63	16	25	16	11	13,9	0,150
04190-12	80	20	32	20	14	20,2	0,300
04190-14	100	25	40	25	16	27,6	0,620
04190-16	125	32	50	30	18	37,8	1,520
04190-20	160	40	60	30	22	58,8	2,650

Equipped Clamps

straight



Material:
Tempered steel, screws heat-treated class 8.8
Surface finish:
Clamp painted; screws black oxide finish
Sample order:
nlm 04192-1616
Note:
"F" is dependent on the depth of slot according to DIN 650.

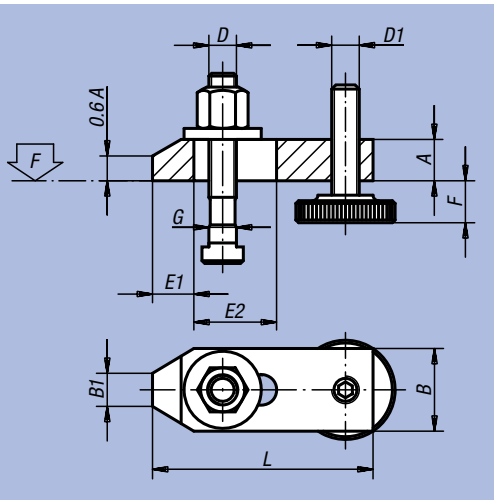

Order No.	L	A	B	B1	E1	E2	F	G for T-slot	D	D1	F kN	kg
04192-1010	80	15	30	12	15	30	8-32	10	M10x80	M10	13,9	0,340
04192-1212	100	20	40	14	21	40	10-40	12	M12x100	M12	20,2	0,700
04192-1214	100	20	40	14	21	40	10-38	14	M12x100	M12	20,2	0,720
04192-1616	125	25	50	18	26	45	13-49	16	M16x125	M16	37,8	1,400
04192-1618	125	25	50	18	26	45	13-46	18	M16x125	M16	37,8	1,420
04192-2020	160	30	60	22	30	60	16-65	20	M20x160	M20	58,8	2,750
04192-2022	160	30	60	22	30	60	16-65	22	M20x160	M20	58,8	2,770

Cropped, equipped clamps

with screws



Material:
Tempered steel, screws heat-treated class 8.8

Surface finish:
Straps: painted;
bolts: black oxide finish

Sample order:
nlm 04193-1616

Note:
"F" is dependent on the depth of slot according to DIN 650.

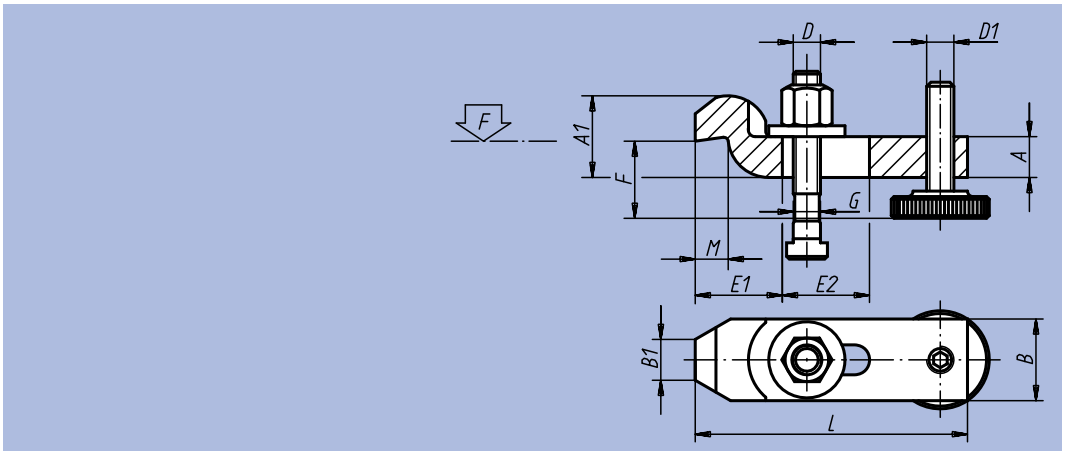

Order No.	L	A	A1	B	B1	E1	E2	F	G for T-slot	D	D1	M	F kN	kg
04193-1010	100	15	30	30	15	32	32	22-46	10	M10x80	M10	12	13,9	0,420
04193-1212	125	20	40	40	20	40	40	28-58	12	M12x100	M12	16	20,2	0,920
04193-1214	125	20	40	40	20	40	40	28-56	14	M12x100	M12	16	20,2	0,930
04193-1616	160	25	50	50	25	49	50	36-72	16	M16x125	M16	20	37,8	1,830
04193-1618	160	25	50	50	25	49	50	36-69	18	M16x125	M16	20	37,8	1,840
04193-2020	200	30	60	60	30	55	70	43-92	20	M20x160	M20	24	58,8	3,350
04193-2022	200	30	60	60	30	55	70	43-92	22	M20x160	M20	24	58,8	3,360

Clamp Springs



Material:
Pressure and retaining ring: tempered steel; spring: spring steel

Surface finish:
Pressure and retaining ring: black oxide finish; spring: polished

Sample order:
nlm 04195-12046

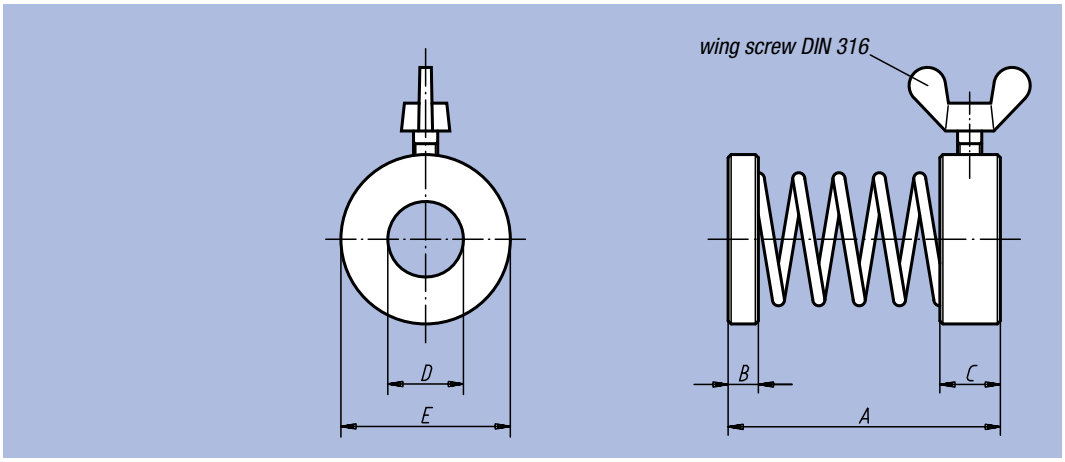

Order No.	A	B	C	D	E	Wing nuts to DIN 316	kg
04195-08029	29	2	6	8,5	16	M4x6	0,017
04195-12046	46	3	8	13	25	M4x10	0,048
04195-16050	50	4	8	16,5	28	M5x10	0,047

Quick-Acting Clamps



Material:
Base in spheroidal cast iron, strap and clamping screw in tempered steel

Surface finish:
Black oxide finish

Sample order:
nlm 04200-40X16
(please also indicate dimension B)

Note:
Quick-Acting Clamps are universal, flexible clamping devices which are reassembled from individual components and yet always make up a complete unit.
There are no loose parts which first have to be put together for a clamping operation.
Thanks to their compact design, these clamps can be placed very close to the workpiece, so that the full surface area of the machine table can be used.

Size 1

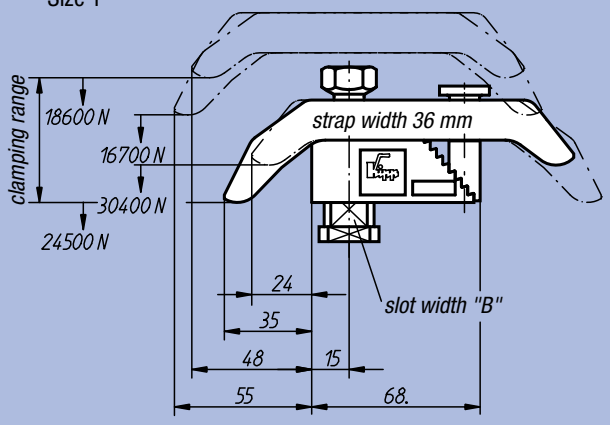

Size 2

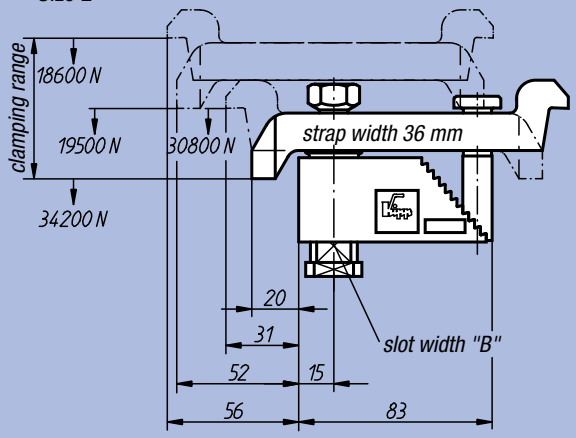

Size 3-5

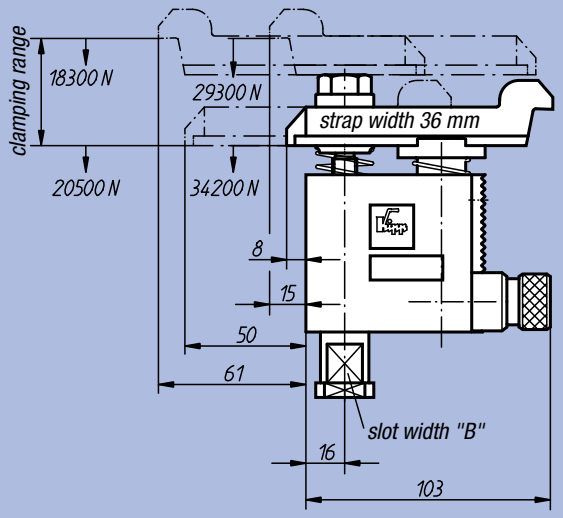

Order No.	Size	Clamping range	Slot width B to DIN 650	kg
04200-10X	1	0-35	12 / 14 / 16 / 18	0,970
04200-20X	2	25-85	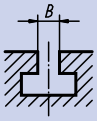	1,210
04200-30X	3	80-137		1,710
04200-40X	4	125-224		2,470
04200-50X	5	160-300		3,060

Stepped Clamps

continuously adjustable



Material:
Tempered steel
Surface finish:
Blue galvanised;
without clamping screw
Sample order:
nlm 04205-20
Note:
The infinitely variable clamp quickly bridges the various tension levels with no additional base and takes up little space on the machine-tool table. The clamp is designed to take the greatest stress and is especially suited to tightening cutting and die-stamping tools. Suitable mounting bolts for these clamps see 07040.

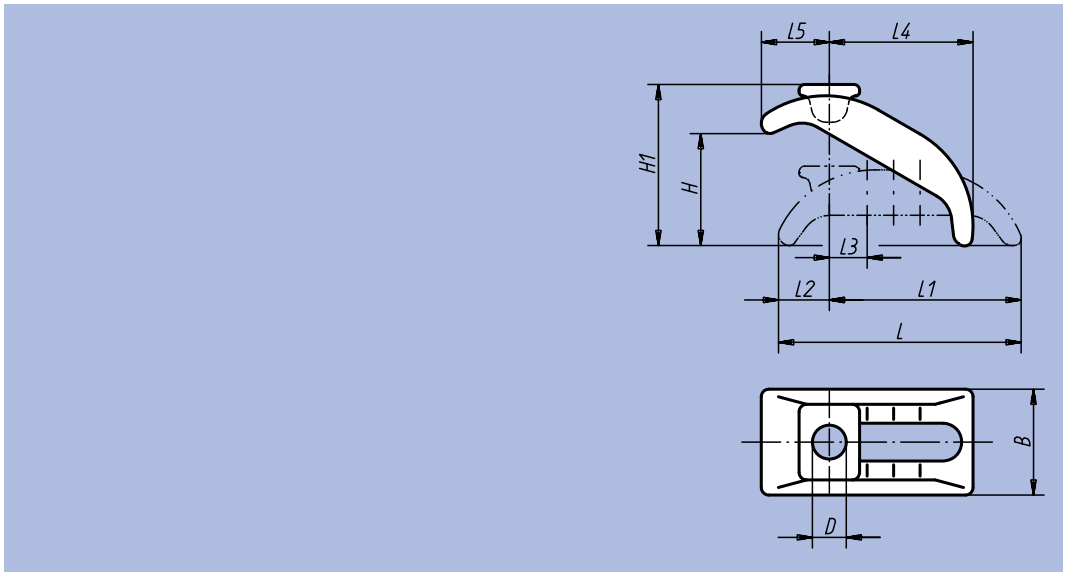

Order No.	suitable for slot width	suitable fastening screw	D	L	L1	L2	L3	L4	L5	B	H	H1	kg
04205-12	12, 14	M12	13	88	68	23	14	48	28	38	0-40	57	0,280
04205-16	16, 18	M16	18	130	101	29	18	74	38	56	0-65	90	0,775
04205-20	20, 22	M20	22	144	112	32	20	80	46	66	0-70	103	1,330
04205-24	24, 28	M24	26	174	135	39	24	100	52	76	0-85	120	1,995

Hinged Clamps



Material:
Tempered steel 1.1191
Surface finish:
Black oxide finish
Sample order:
nlm 04210-10
Note:
Suitable hinge pins see 04520.
Use hexagon nut 07260 to clamp.

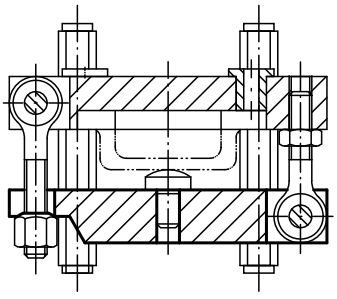

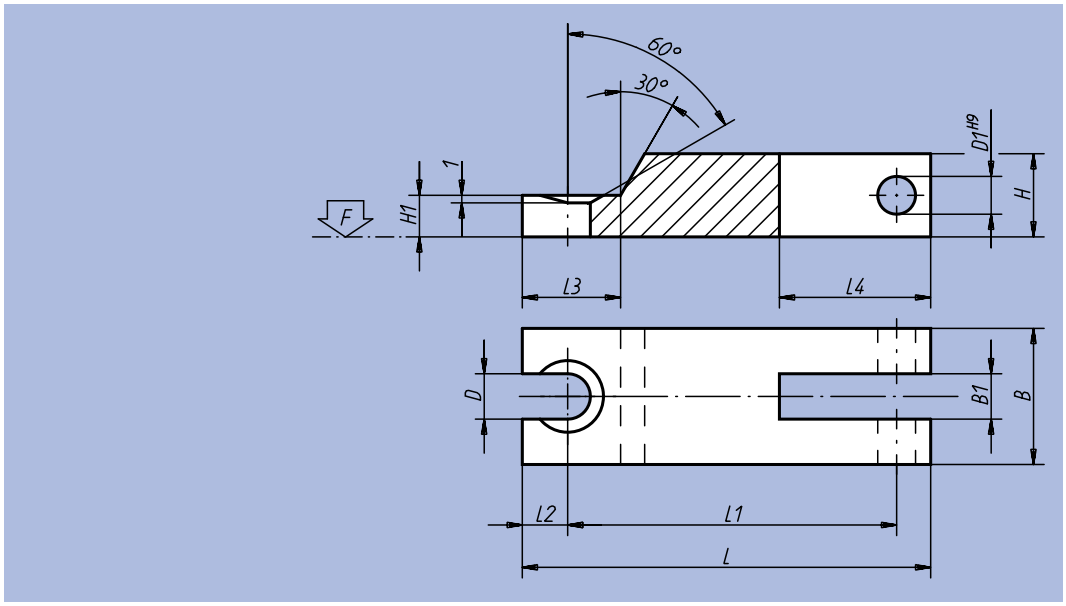

Order No.	L	L1	L2	L3	L4	B	B1	H	H1	D	D1	F kN	kg
04210-08	100	85	7	17	11	25	9,5	16	8	9	8	17,54	0,080
04210-10	125	105	10	24	12	32	12,5	20	10	11	10	27,8	0,130
04210-12	160	138	10	25	15	40	14,5	25	12,5	14	12	40,4	0,270

Cam Levers

with internal and external thread, steel or stainless steel



Material, surface finish:
Handle in cast aluminium
EN AC-46200, black powder-coated;
thrust washer in glass-fibre reinforced plastic PA 6 GF 30, black;
hinge pin in stainless steel 1.4305, natural finish;
threaded stud and washer in steel, quality class 5.8, blue chromated or stainless steel 1.4305, natural finish

Sample order:
nlm 04232-101105X20
(please also indicate dimension L)

Cam Lever
with internal thread

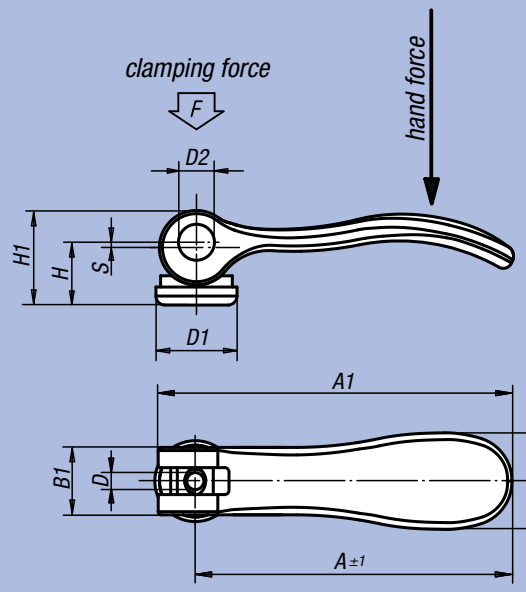

Cam Lever
with external thread

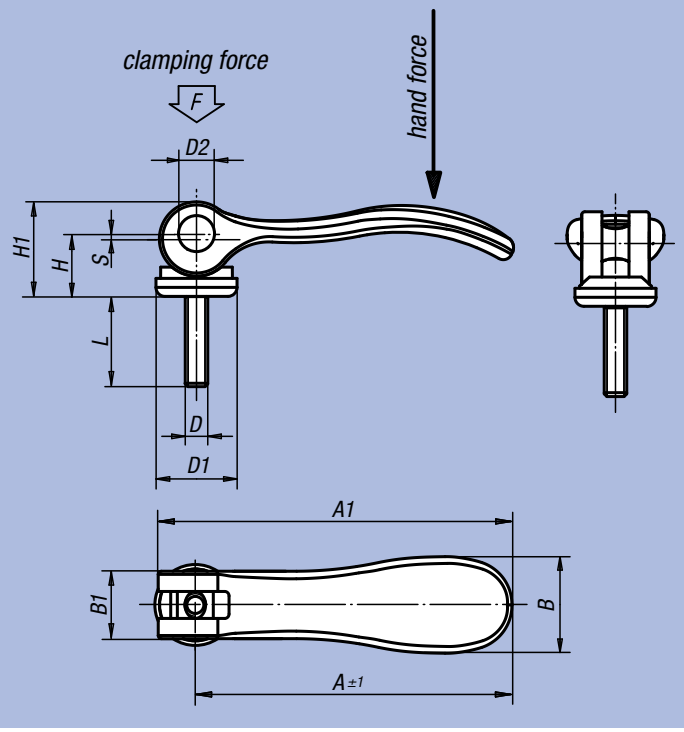

Cam Levers with internal thread

Order No. Surface finish steel	Order No. Surface finish stainless steel	Size	Internal thread D	D1	D2	B	B1	H	H1	A	A1	Clamping force F (kN)	Hand force N	Stroke S
04232-101105	04232-111105	1	M5	18	9	21,5	15	14,5	22	70,4	79,2	4	120	1,2
04232-101106	04232-111106	1	M6	18	9	21,5	15	14,5	22	70,4	79,2	4	120	1,2
04232-201108	04232-211108	2	M8	27	11	33,2	24	18	28,5	96	108	8	350	1,5

Cam Levers with external thread

Order No. Surface finish steel	Order No. Surface finish stainless steel	Size	External thread D	L = screw length	Clamping force F (kN)	Hand force N	Stroke S
04232-101105X	04232-111105X	1	M5	20 / 30 / 40 / 50	4	120	1,2
04232-101106X	04232-111106X	1	M6	20 / 30 / 40 / 50	4	120	1,2
04232-201108X	04232-211108X	2	M8	25 / 30 / 40 / 50	8	350	1,5
04232-201110X	04232-211110X	2	M10	25 / 30 / 40 / 50	8	350	1,5

Cam Levers in stainless steel

with internal and external thread



Material, surface finish:
Handle 1.4308, electrolytic polished;
thrust washer in glass-fibre reinforced plastic PA 6 GF 30, black;
hinge pin, threaded stud and washer 1.4305, natural finish

Sample order:
nlm 04232-112005X20
(please also indicate dimension L)

Cam Lever
with internal thread

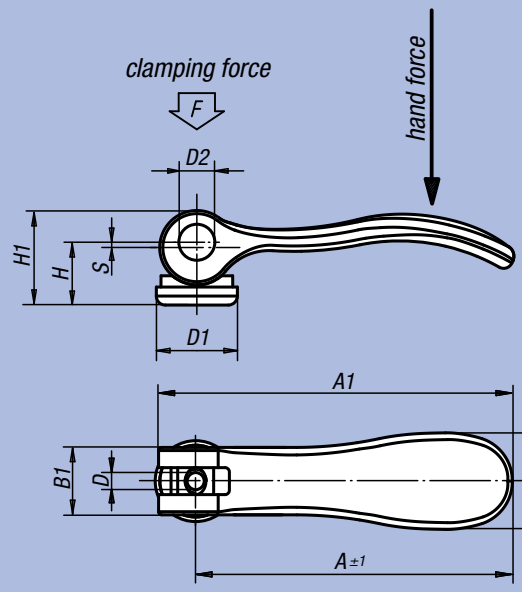

Cam Lever
with external thread

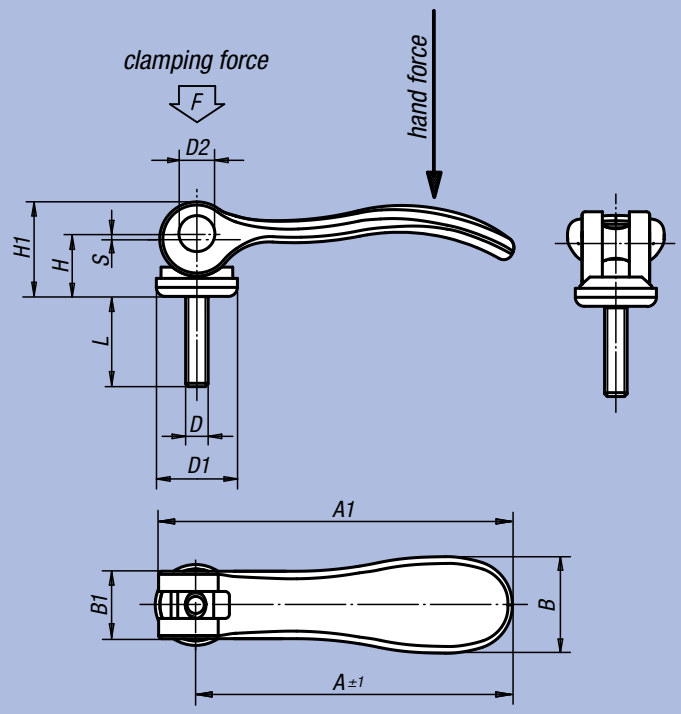

Cam Levers in stainless steel with internal thread

Order No.	Size	Internal thread D	D1	D2	B	B1	H	H1	A	A1	Clamping force F (kN)	Hand force N	Stroke S
04232-112005	1	M5	18	9	21,5	15	14,5	22	70,4	79,2	4	120	1,2
04232-112006	1	M6	18	9	21,5	15	14,5	22	70,4	79,2	4	120	1,2
04232-212008	2	M8	27	11	33,2	24	18	28,5	96	108	8	350	1,5

Cam Levers in stainless steel with external thread

Order No.	Size	External thread D	L = screw length	Clamping force F (kN)	Hand force N	Stroke S
04232-112005X	1	M5	20 / 30 / 40 / 50	4	120	1,2
04232-112006X	1	M6	20 / 30 / 40 / 50	4	120	1,2
04232-212008X	2	M8	25 / 30 / 40 / 50	8	350	1,5
04232-212010X	2	M10	25 / 30 / 40 / 50	8	350	1,5

Adjustable Cam Levers

with external thread, steel or stainless steel



Material, surface finish:
Handle in cast aluminium
EN AC-46200, black powder-coated;
thrust washer in glass-fibre reinforced plastic PA 6 GF 30, black;
hinge pin in stainless steel 1.4305, natural finish;
threaded stud and washer in steel, quality class 5.8, blue chromated or stainless steel 1.4305, natural finish

Sample order:
nlm 04233-101105X20
(please also indicate dimension L)

Note:
Adjustable Cam Levers are used, if the position of the tensioning lever relative to the axis of tension only permits one specific position (faulty circuit). The exact position of the tensioning lever is adjusted with the aid of a screwdriver via the fine thread located on the stud.

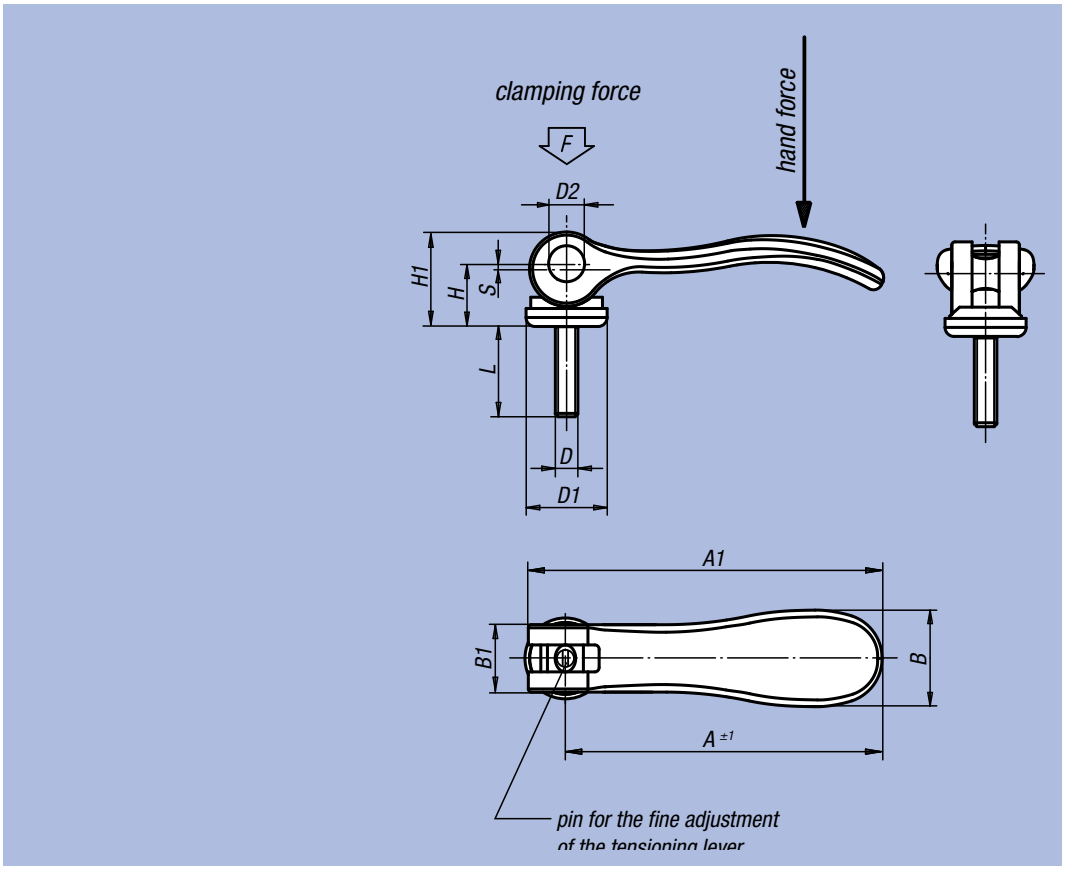

Order No. Surface finish steel	Order No. Surface finish stainless steel	Size	External thread D	D1	D2	B	B1	H	H1	A	A1	L = screw length	Clamping force F (kN)	Hand force N	Stroke S
04233-101105X	04233-111105X	1	M5	18	9	21,5	15	14,5	22	70,4	79,2	20 / 30 / 40 / 50	4	120	1,2
04233-101106X	04233-111106X	1	M6	18	9	21,5	15	14,5	22	70,4	79,2	20 / 30 / 40 / 50	4	120	1,2
04233-201108X	04233-211108X	2	M8	27	11	33,2	24	18	28,5	96	108	25 / 30 / 40 / 50	8	350	1,5
04233-201110X	04233-211110X	2	M10	27	11	33,2	24	18	28,5	96	108	25 / 30 / 40 / 50	8	350	1,5

Adjustable Cam Levers in stainless steel

with external thread



Material, surface finish:
Handle 1.4308, electrolytic polished;
thrust washer in glass-fibre reinforced plastic PA 6 GF 30, black;
hinge pin, threaded stud and washer 1.4305, natural finish

Sample order:
nlm 04233-112005X20
(please also indicate dimension L)

Note:
Adjustable Cam Levers are used, if the position of the tensioning lever relative to the axis of tension only permits one specific position (faulty circuit). The exact position of the tensioning lever is adjusted with the aid of a screwdriver via the fine thread located on the stud.

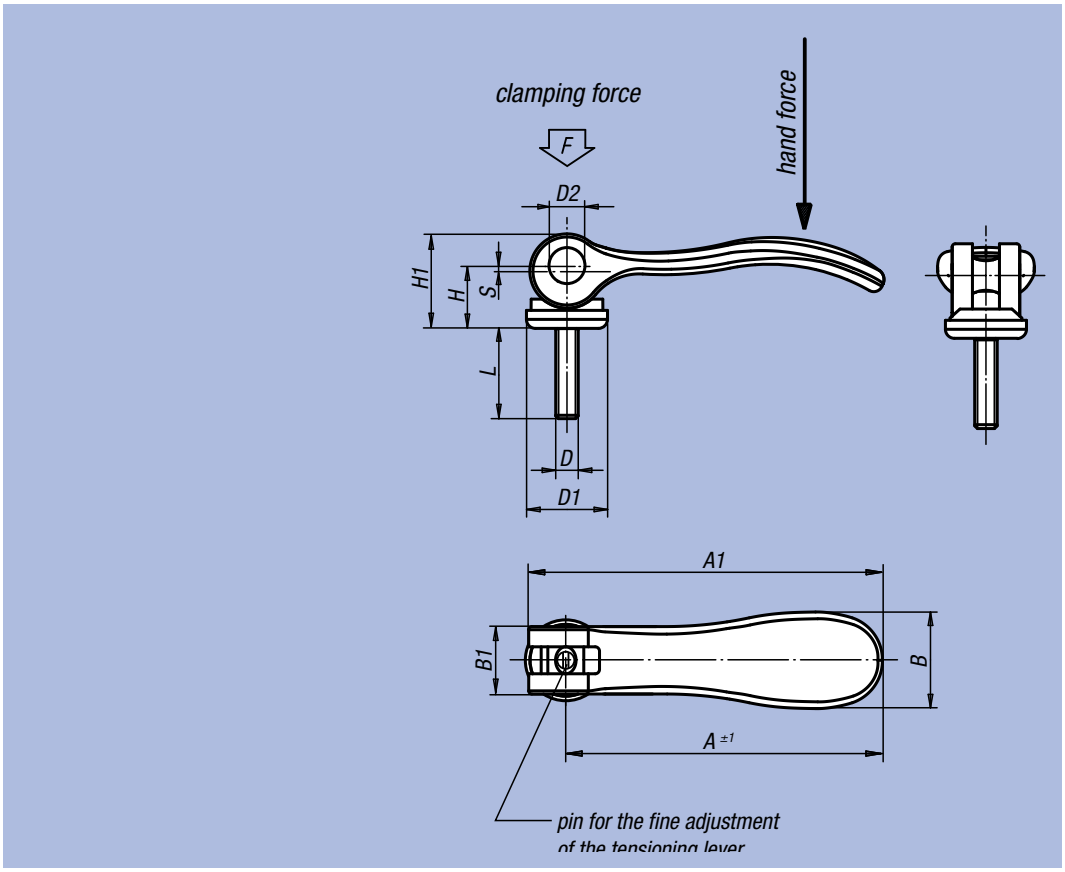

Order No.	Size	External thread D	D1	D2	B	B1	H	H1	A	A1	L = screw length	Clamping force F (kN)	Hand force N	Stroke S
04233-112005X	1	M5	18	9	21,5	15	14,5	22	70,4	79,2	20 / 30 / 40 / 50	4	120	1,2
04233-112006X	1	M6	18	9	21,5	15	14,5	22	70,4	79,2	20 / 30 / 40 / 50	4	120	1,2
04233-212008X	2	M8	27	11	33,2	24	18	28,5	96	108	25 / 30 / 40 / 50	8	350	1,5
04233-212010X	2	M10	27	11	33,2	24	18	28,5	96	108	25 / 30 / 40 / 50	8	350	1,5

Hinge Pins



Material:
Tempered steel 1.1181
Surface finish:
Heat-treated. Ground, natural finish
Sample order:
nlm 04250-08
Note:
For use with:
Single Cam Levers, see 04290 and 04310.
Eye Bolts 07180.
Fork Pieces 07620.
Suitable circlips supplied.

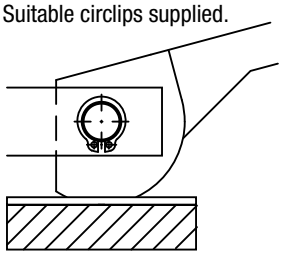

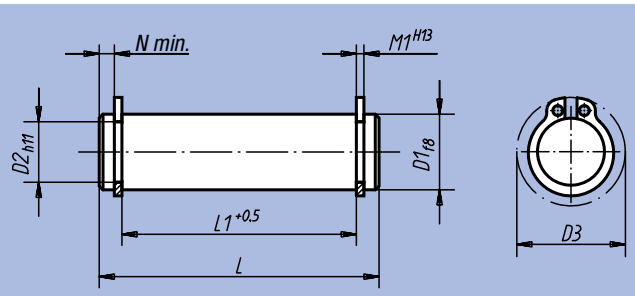

Order No.	D1	L	L1	M1	N min.	D2	D3	kg
04250-05	5	18	13	0,7	1,8	4,8	10,7	0,003
04250-06	6	22	17	0,8	1,7	5,7	12,2	0,005
04250-08	8	30	25	0,9	1,5	7,6	15,2	0,012
04250-081	8	20	16	0,9	1,1	7,6	15,2	0,008
04250-082	8	27	21	0,9	2,1	7,6	15,2	0,011
04250-10	10	37	32	1,1	1,3	9,6	17,6	0,023
04250-101	10	25	20	1,1	1,3	9,6	17,6	0,015
04250-102	10	35	29	1,1	1,9	9,6	17,6	0,018
04250-12	12	46	40	1,1	1,5	11,5	19,6	0,040
04250-121	12	31	25	1,1	1,7	11,5	19,6	0,027
04250-122	12	37	31	1,1	1,9	11,5	19,6	0,033
04250-14	14	44	37	1,1	2,4	13,4	22	0,053
04250-16	16	48	41	1,1	2,4	15,2	24,4	0,075
04250-18	18	58	51	1,3	2,2	17	26,8	0,115

Bolt Clamps



Material:
Tempered steel 1.1181
Surface finish:
Heat-treated and black oxide finish
Sample order:
nlm 04270-08
Note:
For use with pivoting clamp 04230 for example.

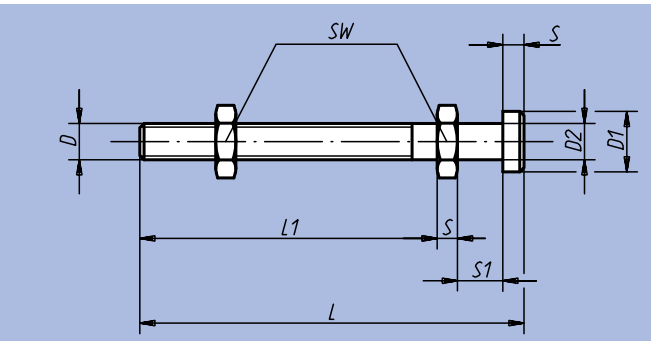

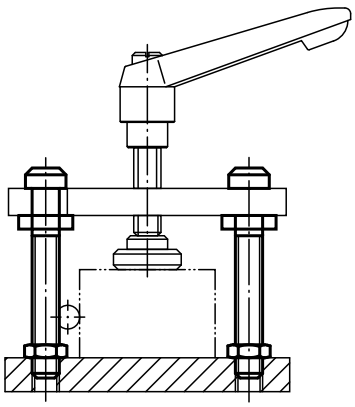

Order No.	D	D1	D2	L	L1	S	S1	SW	kg
04270-08	M8	13	8	80	60	4	11	13	0,040
04270-10	M10	17	10	100	77	5	13	17	0,085
04270-12	M12	19	12	125	97	6	15	19	0,140
04270-14	M14	22	14	160	129	7	17	22	0,230

Single Cam Levers



Material:
Tempered steel 1.7220, plastic ball
Surface finish:
Heat-treated and black oxide finish
Sample order:
nlm 04290-10
Note:
Suitable Hinge Pin, see 04250.
The Cam Lever is an eccentric lever that moves along a logarithmic spiral. Its clamping properties are even over the entire contact surface of the cam.

Force diagram

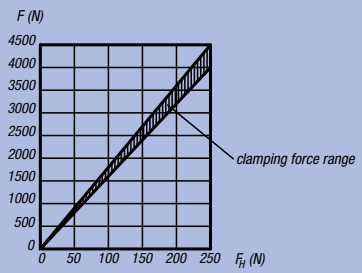

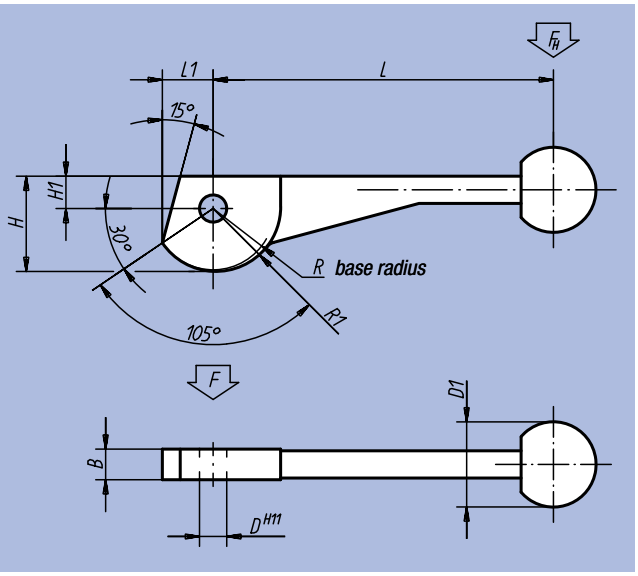

Order No.	L	L1	B	H	H1	D	D1	R	R1	kg
04290-08	100	14,9	9	28	9,5	8	25	18	19	0,100
04290-10	120	18,7	12	35	11,5	10	30	22	23,5	0,210
04290-12	138,5	24,2	14	44	13,5	12	30	28	30	0,335

Double Cam Levers



Material:
Tempered steel 1.7220, plastic ball
Surface finish:
Heat-treated and black oxide finish
Sample order:
nlm 04310-12
Note:
Suitable Hinge Pin, see 04250.
The Cam Lever is an eccentric lever that moves along a logarithmic spiral. Its clamping properties are even over the entire contact surface of the cam.

Force diagram

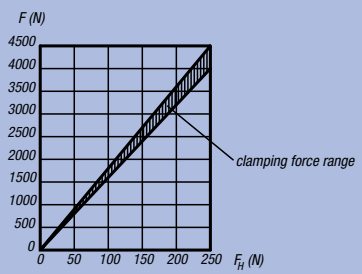

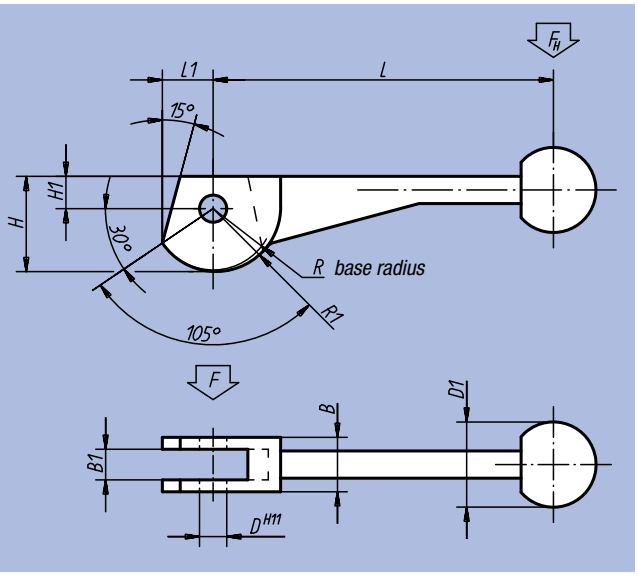

Order No.	L	L1	B	B1	H	H1	D	D1	R	R1	kg
04310-08	100	14,9	16	9	28	9,5	8	25	18	19	0,100
04310-10	120	18,7	20	12	35	11,5	10	30	22	23,5	0,205
04310-12	138,5	24,2	25	14	44	13,5	12	30	28	30	0,330

Single Cam Clamps



Material:
Eccentric lever tempered steel 1.7220, strap tempered steel 1.1191
Surface finish:
Black oxide finish
Sample order:
nlm 04330-10

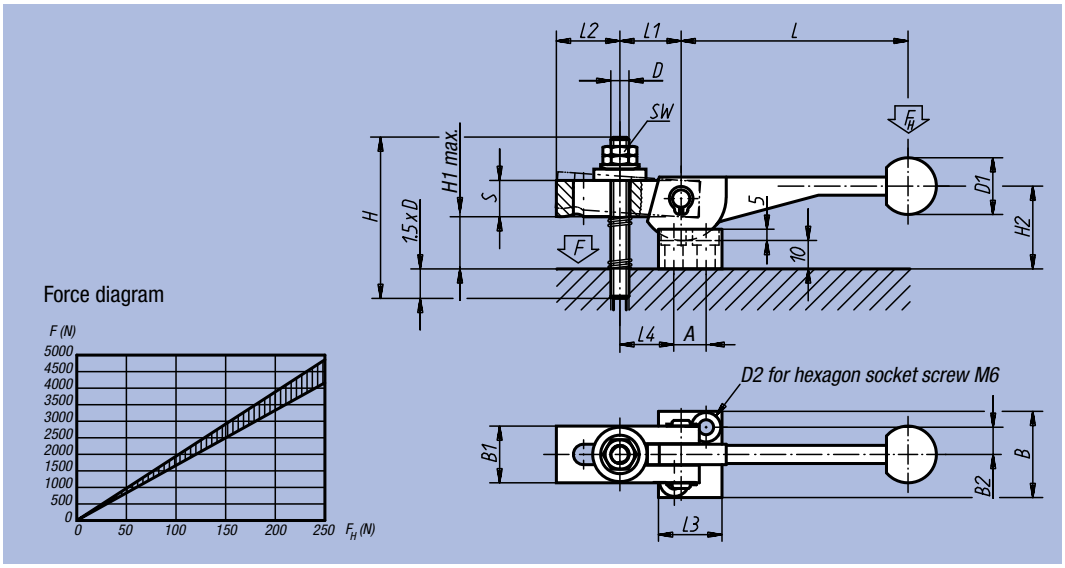

Order No.	L	L1	L2	L3	L4	B	B1	B2	S	H	H1 max.	H2	D	D1	D2	A	SW	kg
04330-08	100	27	28	28	27	38	25	12	16	70	25	34	M8	25	7	14	13	0,195
04330-10	120	34	36	32	35	41	32	13,5	20	80	24	40	M10	30	7	16	17	0,720
04330-12	138,5	43	45	37	45	43	40	14,5	25	100	31	48	M12	30	7	19	19	1,215

Double Cam Clamps



Material:
Eccentric lever tempered steel 1.7220, strap tempered steel 1.1191
Surface finish:
Black oxide finish
Sample order:
nlm 04350-12

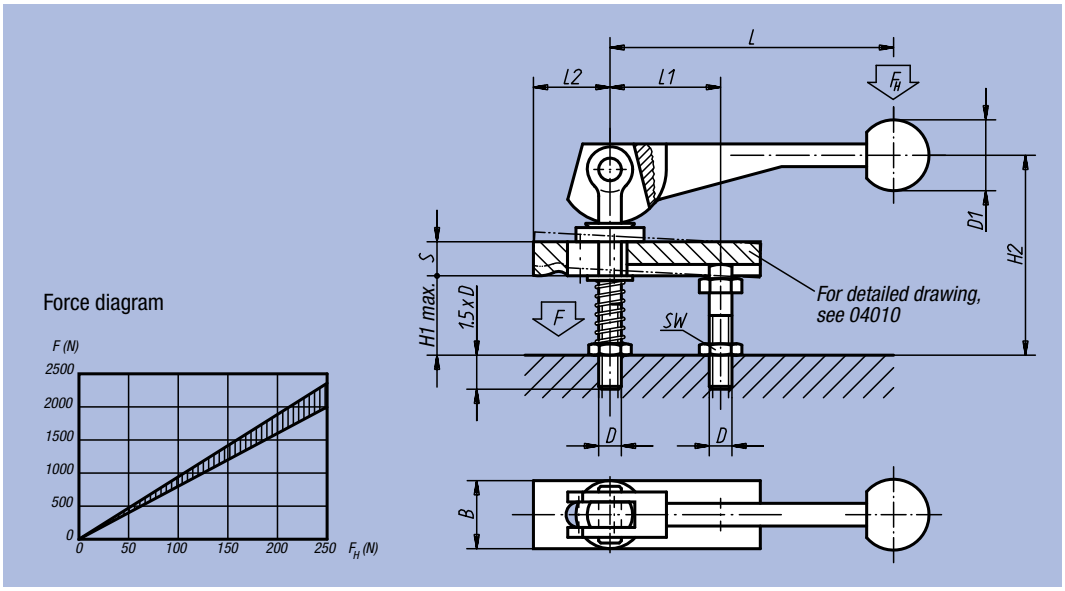

Order No.	L	L1	L2	B	S	H1 max.	H2	D	D1	SW	kg
04350-08	100	39	37	20	12	28	74	M8	25	13	0,300
04350-10	120	49	46	25	16	39	92	M10	30	17	0,600
04350-12	138,5	61	58	32	20	49	120	M12	30	19	1,100

Notes:

Helical excentric

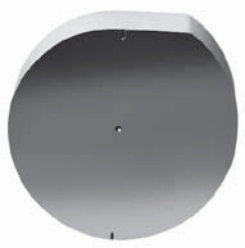

Material:
Hardened steel 1.7131 (sectional steel)
Surface finish:
Saw cut burred,
centre centred,
beginning and end of helix marked
Sample order:
nlm 04360-14
Note:
The helical eccentric is used everywhere, where something has to be clamped or secured in a self-limiting way.
It is activated either by a shaft attached to the centre or, mechanically, pneumatically or hydraulically by a laterally fixed lever. The self-limiting effect is retained if the pressure drops. This produces significantly greater operating safety when clamping pneumatically or hydraulically.

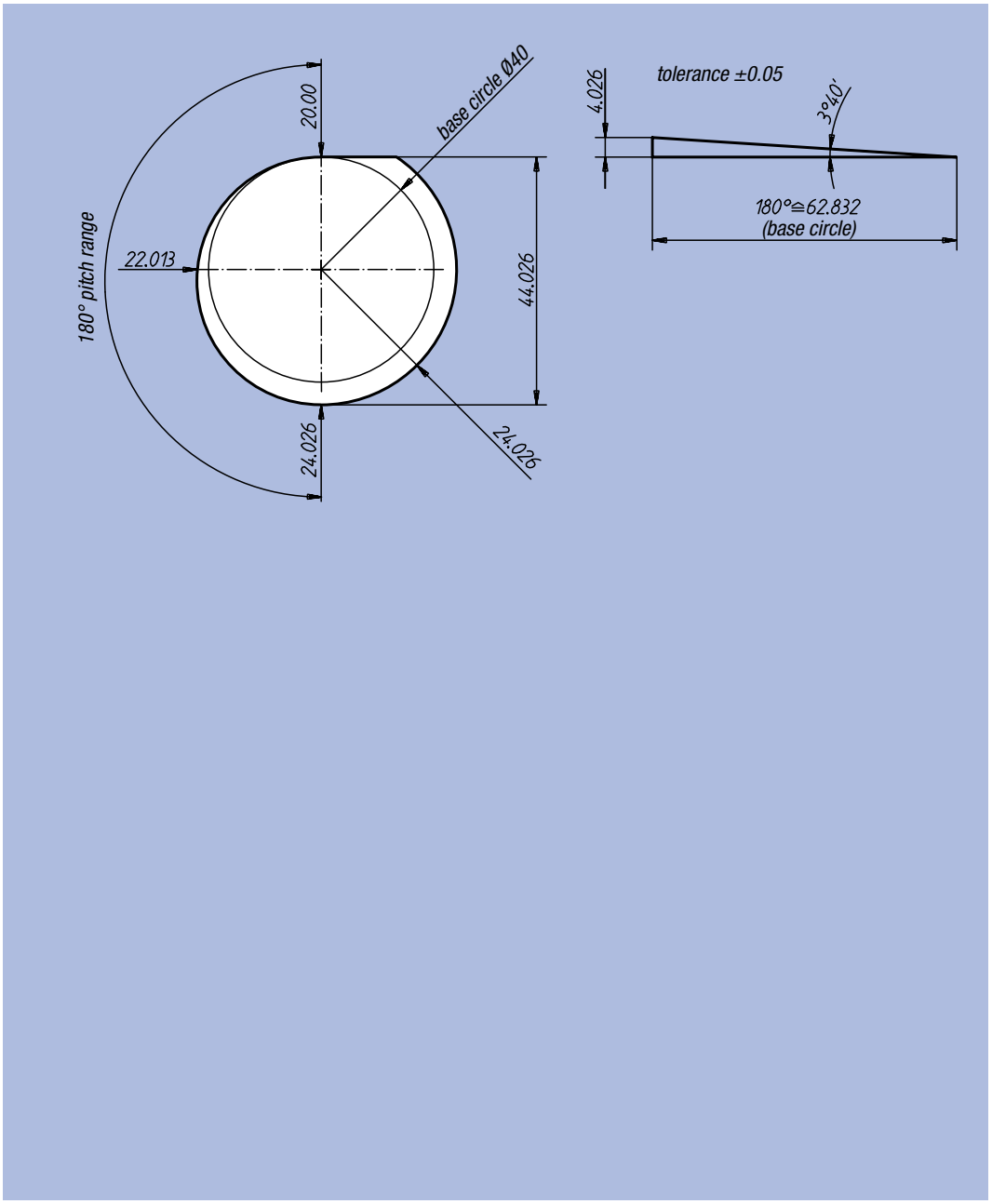

application example:

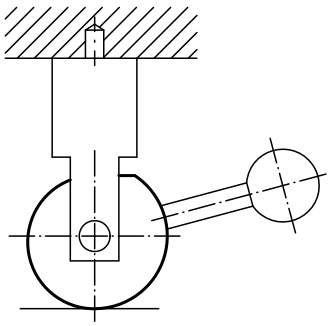

Order No.	Ø of base circle	Disc thickness	kg
04360-14	40	14	0,175
04360-20	40	20	0,255

Locking Disc



Material:
Sintered steel
Sample order:
nlm 04362-108

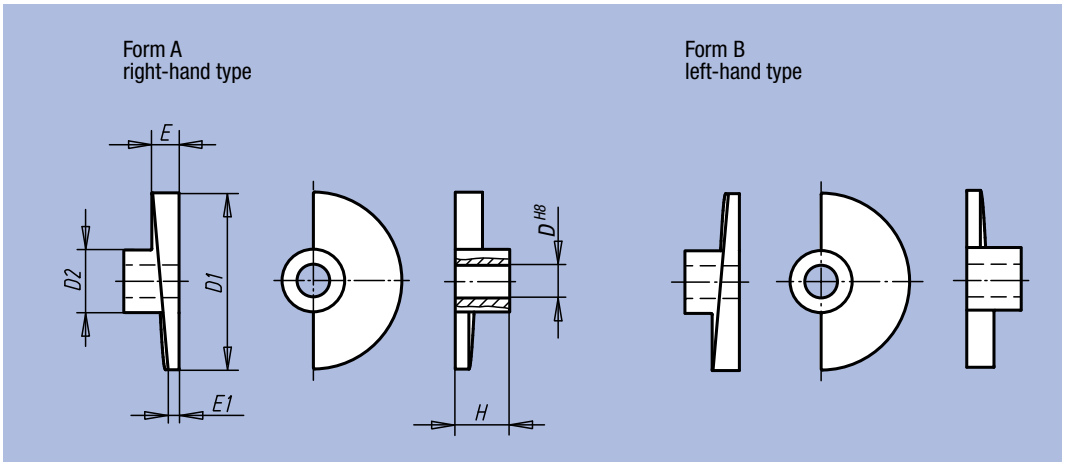

Order No. Form A	Order No. Form B	D	D1	D2	E	E1	H	g
04362-108	04362-208	8	35	18	7	3	15	35
04362-110	04362-210	10	35	18	7	3	15	33
04362-112	04362-212	12	65	23	7	5	20	120
04362-116	04362-216	16	80	27	9	6	24	210

Notes:

Mini Swing Clamps

with cam lever



Material:
Tempered steel
Surface finish:
Heat-treated and black oxide finish
Sample order:
nlm 04363-0100
Note:
Swing clamps are used if torsion points must be free in order to place and remove the workpiece.

* Admissible hand force to operate the handle.

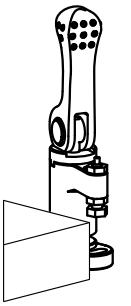

unclamped

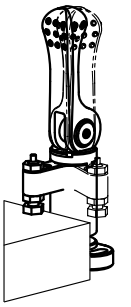

swivel

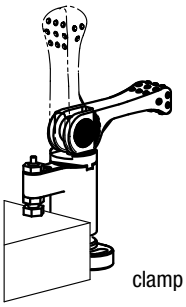

clamp

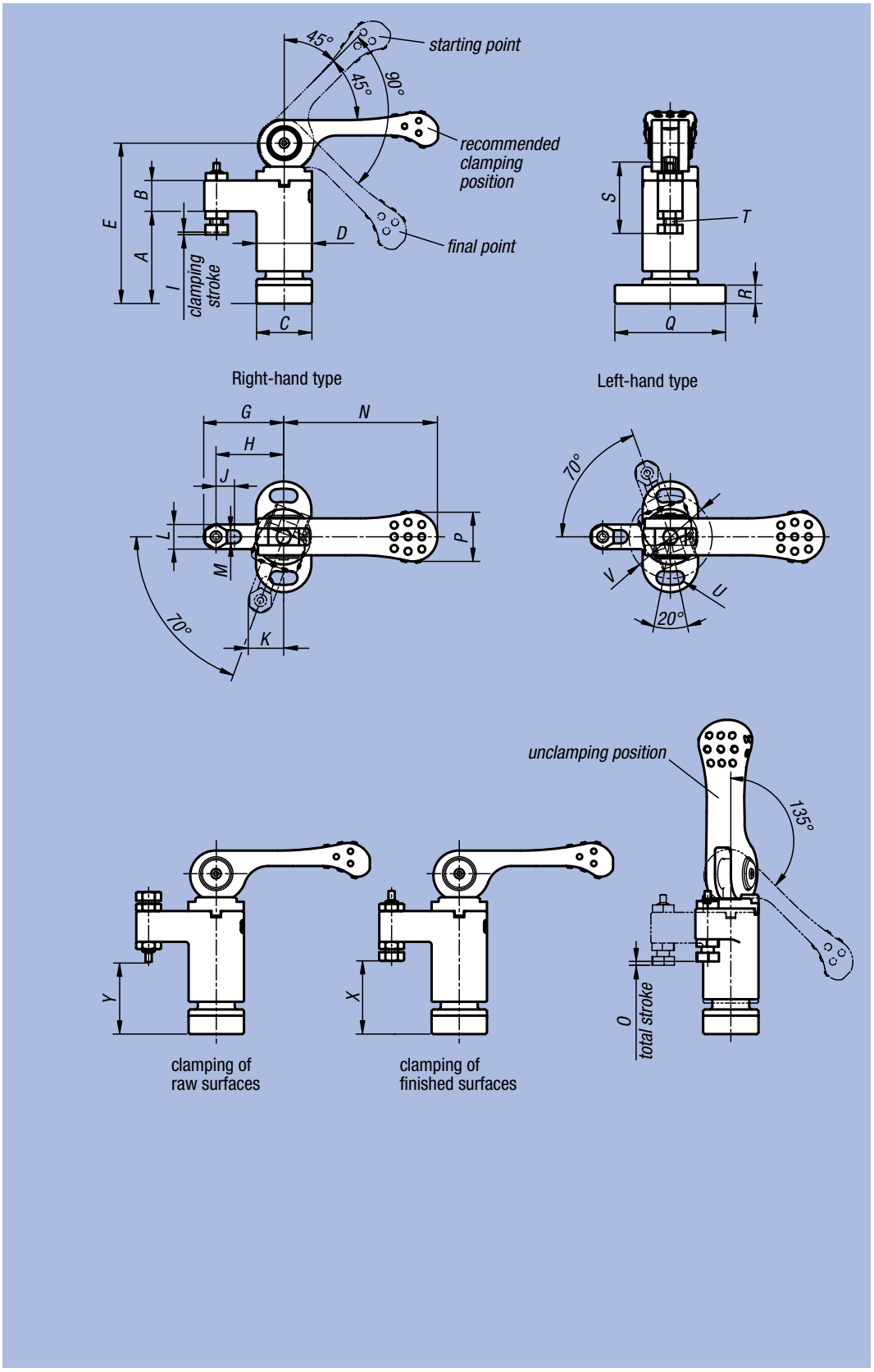

Order No. Surface finish left-hand type	Order No. Surface finish right-hand type	A	B	C	D	E	G	H	I	J	K	L	M	N	O	P	Q	R	S	T	U	V	X min.	X max.	Y min.	Y max.	Clamping force N	Hand force N	kg
04363-0100	04363-1100	30	10	18	18	52	26	22	0,8	6	11,5	8	4,3	50	1,2	16	36	6	22,8	M4	4,3	27	22,4	25,2	22	24,8	800	100*	0,134
04363-0150	04363-1150	40	14	23	23	68	35	30	1	8	15,3	10	5,3	63	1,5	19	45	8	28,5	M5	5,3	34	30,8	33,8	31,7	34,7	1500	150*	0,272
04363-0200	04363-1200	50	18	30	30	87	45	37	1,2	8	20,7	16	8,4	80	1,8	24	65	12	45,5	M8	8,4	48	31,9	39,6	32,9	40,6	2100	200*	0,625
04363-0300	04363-1300	60	22	40	40	107	55	45	1,5	8	25,4	20	10,4	100	2,3	30	85	15	57	M10	10,5	64	35,7	46,7	38,2	49,2	2800	300*	1,340

Mini Swing Clamps



Material:
Tempered steel; handle in plastic

Surface finish:
Heat-treated and black oxide finish; handle black

Sample order:
nlm 04364-0100

Note:
Swing clamps are used if torsion points must be free in order to place and remove the workpiece.

* Admissible hand force to operate the handle.

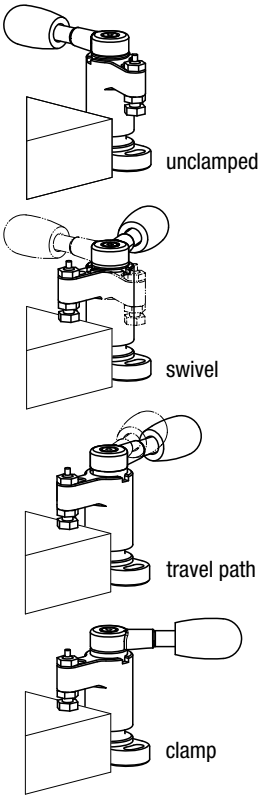

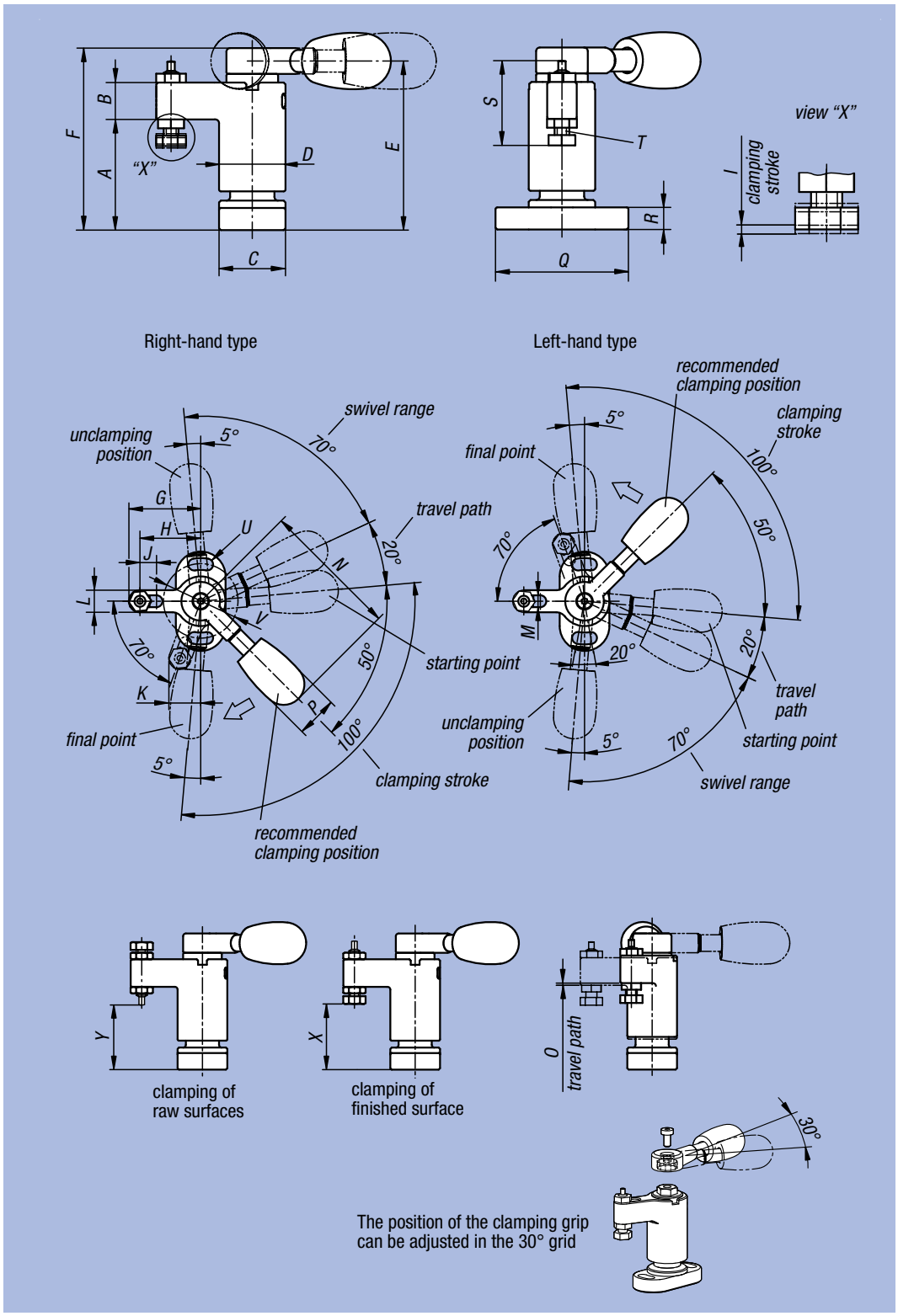

Order No. Surface finish left-hand type	Order No. Surface finish right-hand type	A	B	C	D	E	F	G	H	I	J	K	L	M	N	O	P	Q	R	S	T	U	V	X min.	X max.	Y min.	Y max.	Clamping force N	Hand force N	kg
04364-0100	04364-1100	30	10	18	18	45,8	49	26	22	1	6	11,5	8	4,3	50	0,8	15	36	6	22,8	M4	4,3	27	22,3	25,3	21,9	24,9	1100	100*	0,112
04364-0150	04364-1150	40	14	23	23	61,3	66	35	30	1,4	8	15,3	10	5,3	63	1,1	20	45	8	28,5	M5	5,3	34	30,6	34	31,5	34,9	1800	150*	0,250
04364-0200	04364-1200	50	18	30	30	76,5	82	45	37	1,5	8	20,7	16	8,4	80	1,4	26	65	12	45,5	M8	8,4	48	31,7	39,7	32,7	40,7	2200	200*	0,570
04364-0300	04364-1300	60	22	40	40	93	100	55	45	1,9	8	25,4	20	10,4	100	1,7	33	85	15	57	M10	10,5	64	35,5	46,9	38	49,4	3500	300*	1,200

Swing Clamps



Material:
Tempered steel;
ball knob in plastic

Surface finish:
Heat-treated and black oxide finish;
ball knob in black duroplastic PF 31

Sample order:
nlm 04366-013232

Note:
* Admissible hand force to operate the handle.

Accessory:
Standard handles 06355. Screw-in handles with adjustable torque 06357.

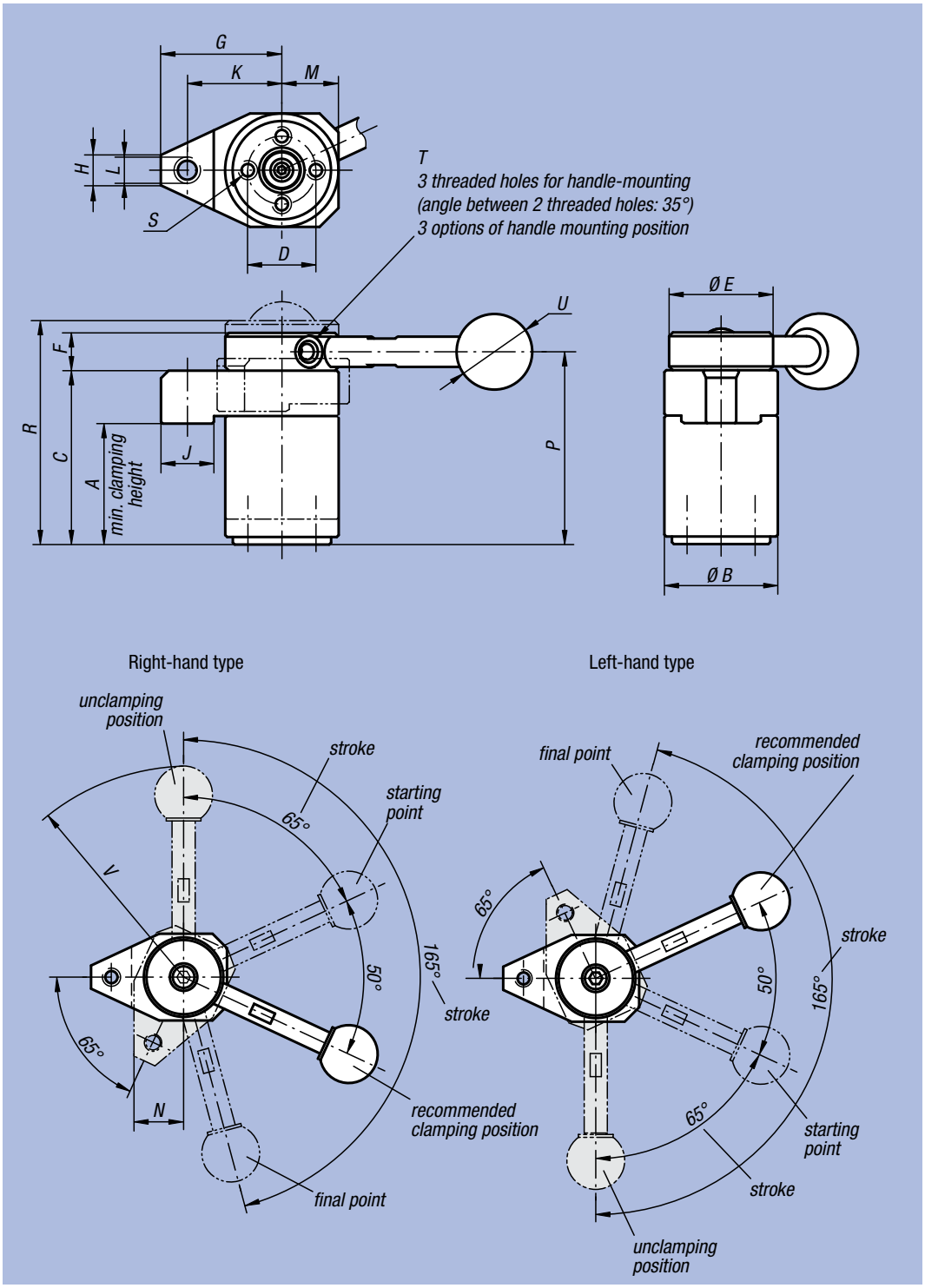

Order No. left-hand type	Order No. right-hand type	Surface finish	A min.	A max.	B	C	D	E	F	G	H	J	K	L	M	N	P	R	S	T	U	V	Clamping force N	Hand force N	kg
04366-003232	04366-103232	without handle	31,4	32,6	30	46	18	30	10	32	8	14	25	M6	15	17	51	57,5	M4x8	M5	20	73	800	150*	0,270
04366-004540	04366-104540	without handle	44,1	45,9	40	63	25	38	13	40	12	16	32	M8	20	22,5	69,5	78,1	M6x12	M6	25	107	1200	200*	0,600
04366-013232	04366-113232	with handle	31,4	32,6	30	46	18	30	10	32	8	14	25	M6	15	17	51	57,5	M4x8	M5	20	73	800	150*	0,300
04366-014540	04366-114540	with handle	44,1	45,9	40	63	25	38	13	40	12	16	32	M8	20	22,5	69,5	78,1	M6x12	M6	25	107	1200	200*	0,660

Technical Information for Swing Clamps

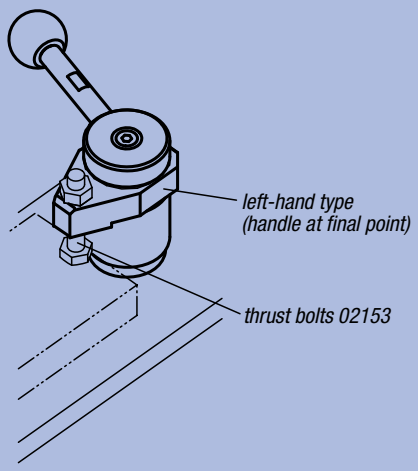

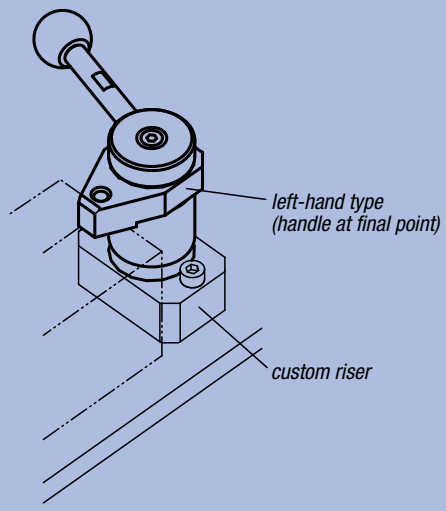

Top installation

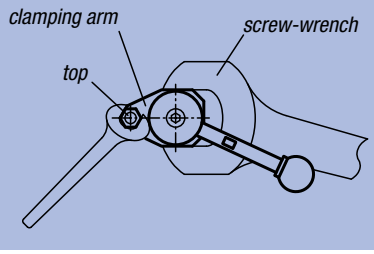

When installing a top on the clamping arm, lock the clamping arm using a screw-wrench to prevent it from receiving.

nlm 04366

Mounting Plates

for swing clamp



Material:
Tempered steel
Surface finish:
Black oxide finish
Sample order:
nlm 04366-503209

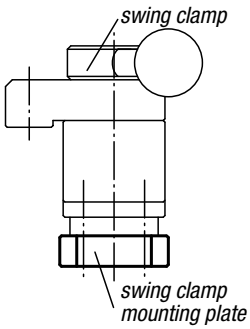

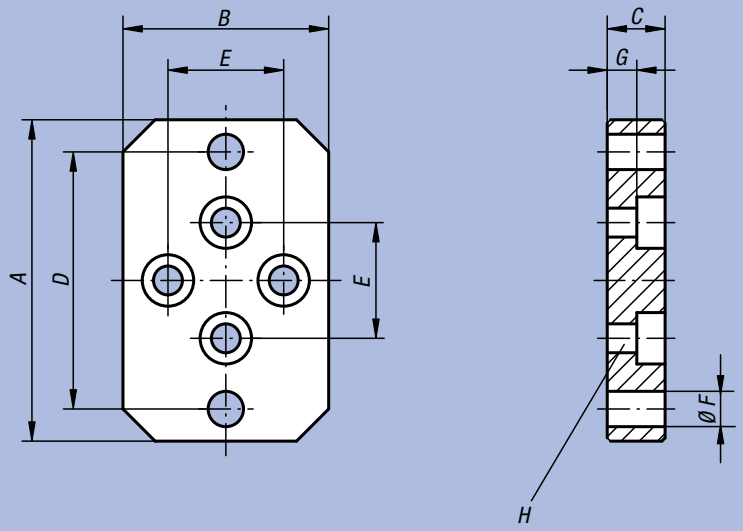

through holes for socket head screws DIN 912

Order No.	A	B	C	D	E	F	G	H	Suitable for	kg
04366-503209	50	32	9	40	18	5,5	4,5	M4	04366-...3232	0,110
04366-754212	75	42	12	55	25	9	5,5	M6	04366-...4540	0,250

Hook Clamps



Material:
Tempered, heat treated steel
Surface finish:
Black oxide finish
Sample order:
nlm 04370-10

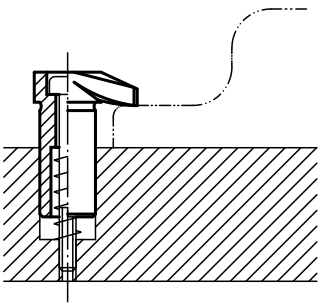

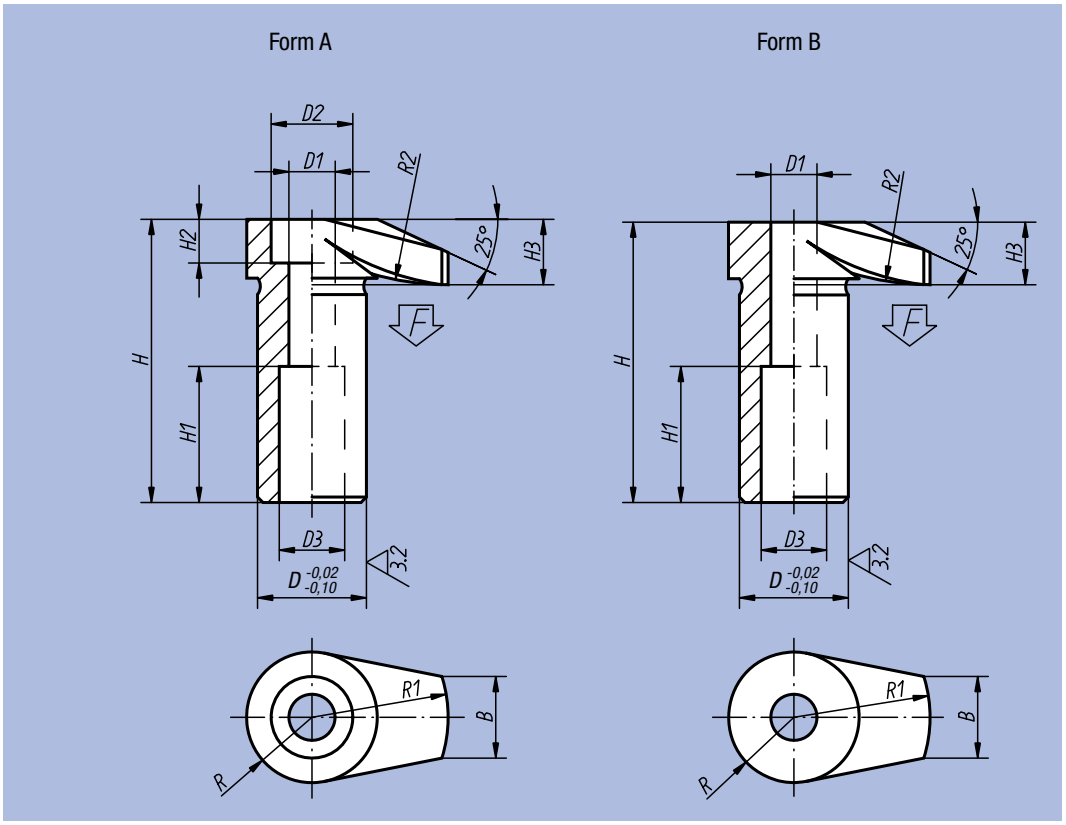

Order No.	Form	D	D1	D2	D3	H	H1	H2	H3	B	R	R1	R2	F max. kN	kg
04370-06	A	16	6,5	11	10	42	20	6	10	11	9	20	30	4,8	0,052
04370-08	A	20	8,5	15	12	52	25	8	12	15	12	25	50	8,8	0,111
04370-10	A	25	10,5	18	14	66	32	10	16	17	14	32	60	13,9	0,230
04370-12	A	32	12,5	20	17	83	40	12	20	20	18	40	80	20,2	0,472
04370-106	B	16	6,5	-	10	41,5	20	-	9,5	11	9	20	30	4,8	0,060
04370-108	B	20	8,5	-	12	51,5	25	-	11,5	15	12	25	50	8,8	0,119
04370-110	B	25	10,5	-	14	65,5	32	-	15,5	17	14	32	60	13,9	0,238
04370-112	B	32	12,5	-	17	82,5	40	-	19,5	20	18	40	80	20,2	0,492

Hook Clamps

with collar



Material:
Tempered steel
Surface finish:
Heat-treated and black oxide finish
Sample order:
nlm 04371-06

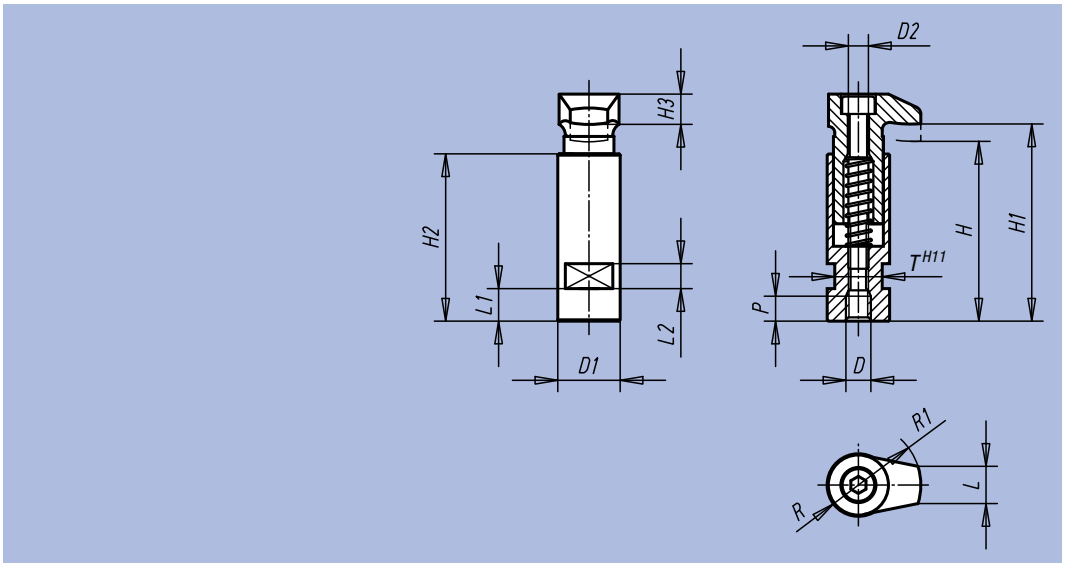

Order No.	D	D1	D2	H	H1	H2	H3	L	L1	L2	P	R	R1	T	Clamping force kN
04371-06	M6	20	6	56	60	53	10	11	9	8	8	9	20	17	4,82
04371-08	M8	20	6	56	60	53	10	11	9	8	8	9	20	17	8,77
04371-10	M10	25	8	72	79	67	12	15	13	10	10	12	25	19	13,9
04371-12	M12	32	10	88	96	82	16	17	18	12	12	14	32	27	20,2
04371-16	M16	40	12	109	118	102	20	20	22	12	16	18	40	32	37,8

Notes:

Ground Hook Clamps

Form A/B/C



Material:
Tempered, heat-treated steel

Surface finish:
Black oxide finish, shaft diameter ground

Sample order:
nlm 04372-216040

Note:
The stated clamping forces and tightening torques are valid within the stated clamping range (H5).

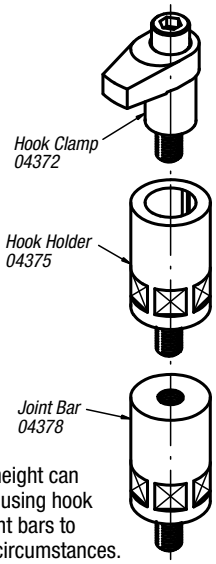

The clamping height can be adjusted by using hook holders and joint bars to suit individual circumstances.

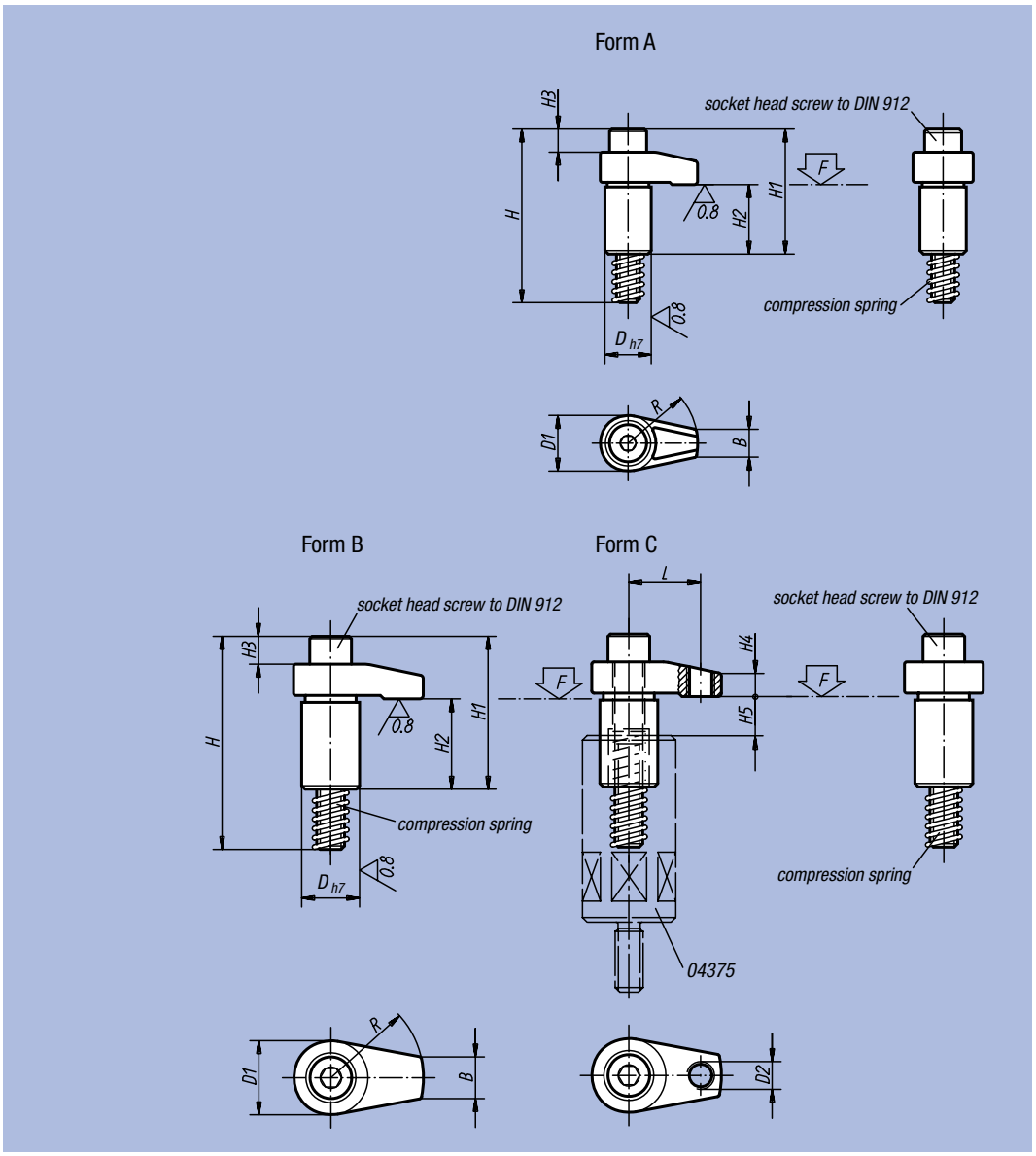

Order No.	Form	D	D1	D2	H	H1	H2	H3	H4	H5 max. clamping range	B	L	R	Socket head screw DIN 912	Tightening torque max. Nm	F max. kN	kg
04372-208020	B	18	22	-	58	37	23	2	7	10	10	-	20	M8x50	37,2	13,6	0,090
04372-208025	B	18	22	-	58	37	23	2	7	10	10	-	25	M8x50	32,3	10,9	0,095
04372-208030	B	18	22	-	58	37	23	2	7	10	10	-	30	M8x50	29,4	9	0,105
04372-110030	A	20	24	-	75	54	30	9	10	12	12	-	30	M10x65	37,2	13	0,162
04372-110040	A	20	24	-	75	54	30	9	10	12	12	-	40	M10x65	31,4	9,8	0,173
04372-212040	B	25	32	-	92	66	39	11	12	15	18	-	40	M12x80	58,8	17,5	0,300
04372-212050	B	25	32	-	92	68	39	11	12	15	18	-	50	M12x80	49	14	0,365
04372-212060	B	25	32	-	92	68	39	11	12	15	18	-	60	M12x80	45,1	11,6	0,395
04372-312140	C	25	32	M12	92	66	39	11	10	15	18	31	40	M12x80	58,8	22,6	0,295
04372-312150	C	25	32	M12	92	68	39	11	13	15	18	38	50	M12x80	49	18,5	0,353
04372-312160	C	25	32	M12	92	68	39	11	13	15	18	46	60	M12x80	45,1	15,2	0,390
04372-216040	B	32	36	-	101	75	39	15	15	15	22	-	40	M16x85	166,6	37,9	0,505
04372-216050	B	32	36	-	101	75	39	15	15	15	22	-	50	M16x85	147	30,4	0,575
04372-216060	B	32	36	-	101	75	39	15	15	15	22	-	60	M16x85	127,4	25,2	0,619
04372-316150	C	32	36	M12	101	75	39	15	16	15	22	38	50	M16x85	147	38	0,558
04372-316160	C	32	36	M12	101	75	39	15	16	15	22	46	60	M16x85	127,4	33	0,600

Hook Clamps

with collar



Material:
Hook clamps and hook joints in tempered, heat-treated steel

Surface finish:
Black oxide finish

Sample order:
nlm 04373-12060

Note:
Hook Clamps with collar can be screwed directly into an M.T.P. hole or similar, even without counterbore. For suitable height adjustment elements, see Joint Bars 04378.

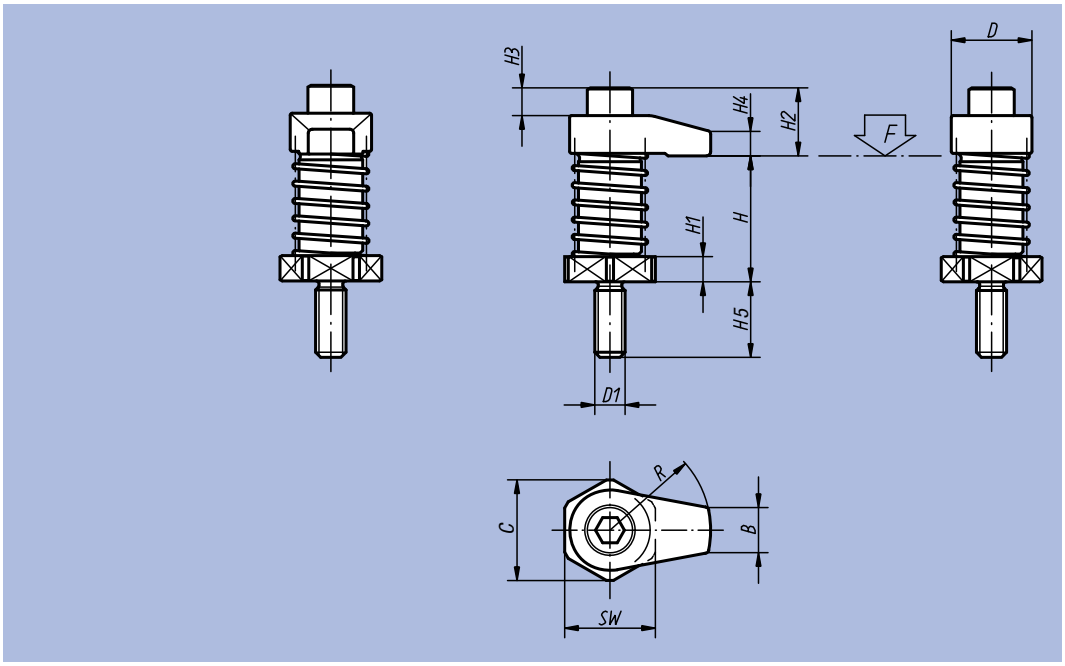

Order No.	D	D1	H clamping range	H1	H2	H3	H4	H5	B	C	R	SW	Tightening torque max. Nm	F max. kN	kg
04373-08020	22	M8	35 - 45	6	14	2	7	19	10	25	20	22	20	7,9	0,130
04373-08025	22	M8	35 - 45	6	14	2	7	19	10	25	25	22	20	7,3	0,135
04373-08030	22	M8	35 - 45	6	14	2	7	19	10	25	30	22	20	6,7	0,145
04373-08120	22	M8	45 - 55	16	14	2	7	19	10	25	20	22	20	7,9	0,160
04373-08125	22	M8	45 - 55	16	14	2	7	19	10	25	25	22	20	7,3	0,165
04373-08130	22	M8	45 - 55	16	14	2	7	19	10	25	30	22	20	6,7	0,175
04373-12040	32	M12	50 - 65	10	27	11	10	30	18	40	40	36	45	13,5	0,430
04373-12050	32	M12	50 - 65	10	29	11	12	30	18	40	50	36	45	12,6	0,495
04373-12060	32	M12	50 - 65	10	29	11	12	30	18	40	60	36	45	11,7	0,535
04373-12140	32	M12	65 - 80	25	27	11	10	30	18	40	40	36	45	13,5	0,560
04373-12150	32	M12	65 - 80	25	29	11	12	30	18	40	50	36	45	12,6	0,620
04373-12160	32	M12	65 - 80	25	29	11	12	30	18	40	60	36	45	11,7	0,660
04373-16040	36	M16	50 - 65	10	36	15	15	30	22	40	40	36	60	13,4	0,635
04373-16050	36	M16	50 - 65	10	36	15	15	30	22	40	50	36	60	12,4	0,695
04373-16060	36	M16	50 - 65	10	36	15	15	30	22	40	60	36	60	12	0,735
04373-16140	36	M16	65 - 80	25	36	15	15	30	22	40	40	36	60	13,4	0,765
04373-16150	36	M16	65 - 80	25	36	15	15	30	22	40	50	36	60	12,4	0,825
04373-16160	36	M16	65 - 80	25	36	15	15	30	22	40	60	36	60	12	0,865

Hook Clamps

with mounting bracket



Material:
Hook clamps and clamping screw in tempered, heat-treated steel

Surface finish:
Black oxide finish

Sample order:
nlm 04374-12

example:

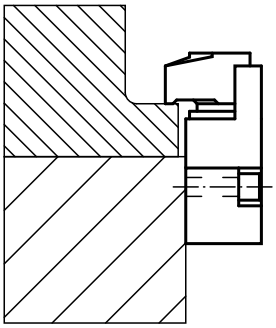

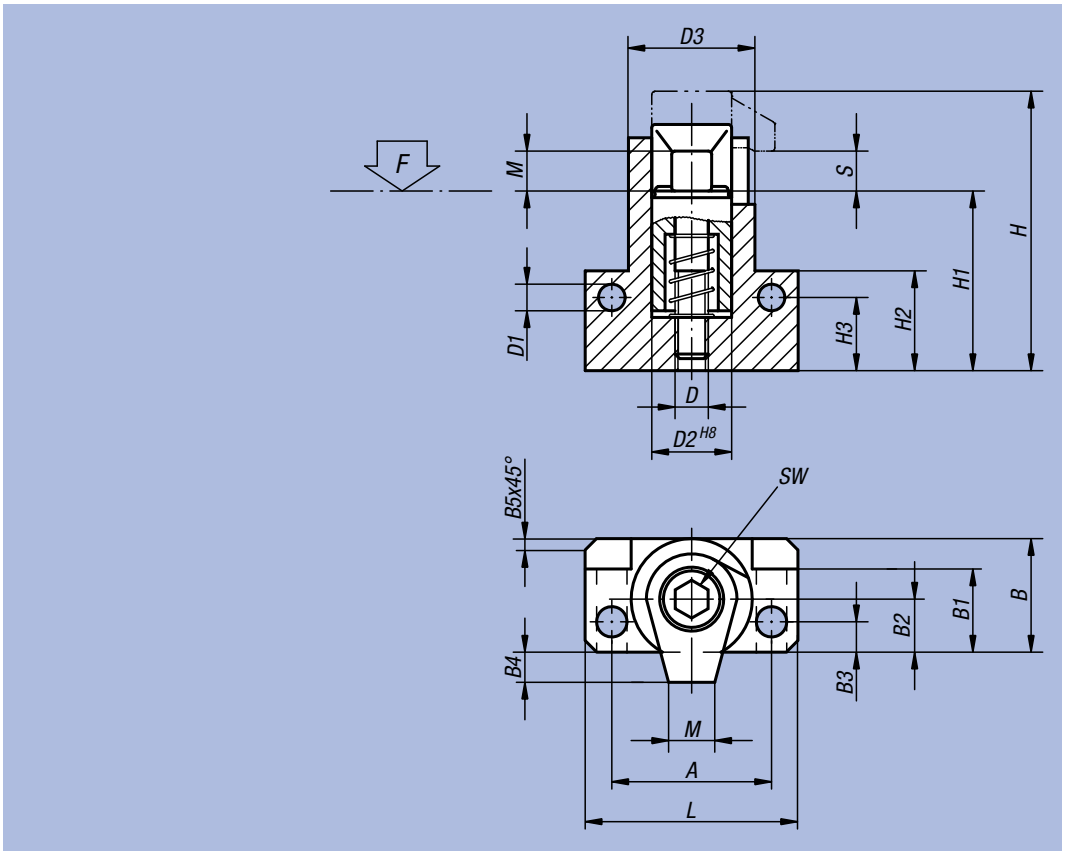

Order No.	D	D1	D2	D3	A	B	B1	B2	B3	B4	B5	H	H1	H2	H3	L	M	S	SW	Tightening torque max. Nm	F max. kN	kg
04374-08	M8	6,4	20	28	38	26	19,5	12	6	6	2,5	62	47,5	25	18	50	10	4	6	30	17	0,330
04374-10	M10	8,4	24	34	48	31	22,5	14	7,5	9	3	74	57,5	30	21	64	12	5	8	50	18	0,555
04374-12	M12	10,5	28	40	55	36,5	26	16,5	9	10,5	3,5	87	67	35	24	75	15	5	10	60	20	0,810
04374-16	M16	12,8	34	48	65	43,5	31	19,5	10	16,5	4	112	87	45	32	88	20	5	14	120	24	1,590

Hook Holders



Material:
Tempered steel
Surface finish:
Black oxide finish
Sample order:
nlm 04375-12080
Note:
Hook Holders serve to guide and raise Hook Clamps.

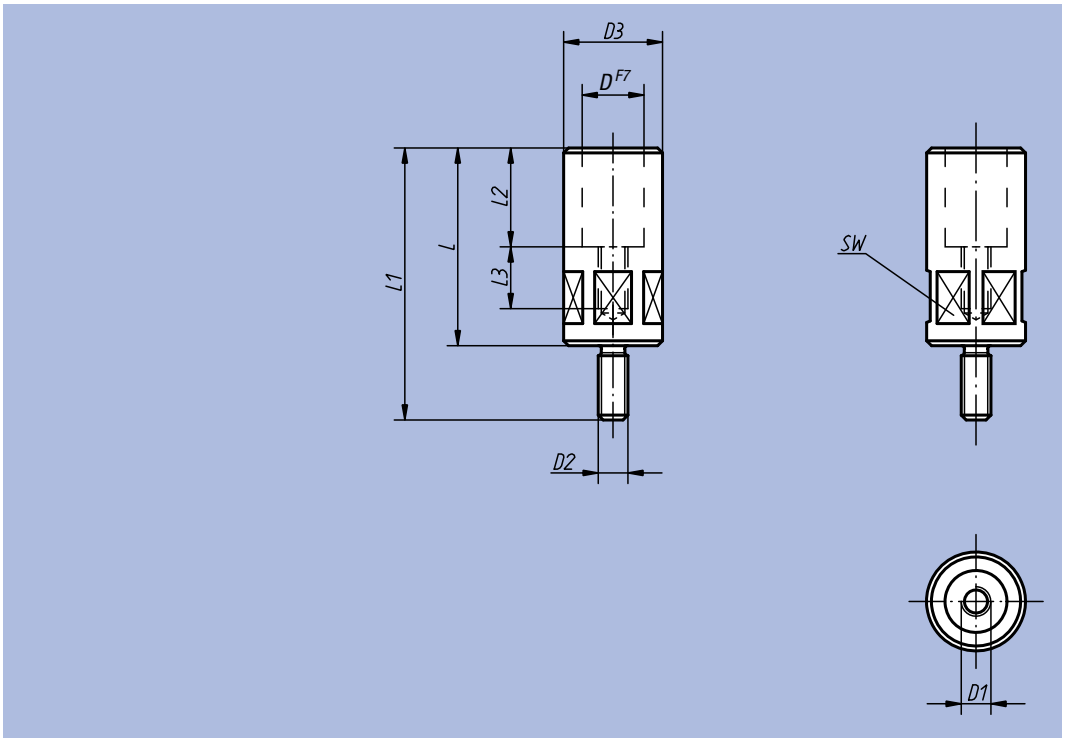

Order No.	D	D1	D2	D3	L	L1	L2	L3	SW	Tightening torque max. Nm	kg
04375-08055	18	M8	M8	24	55	74	25	20	22	29,4	0,135
04375-10063	20	M10	M12	32	63	93	30	21	30	39,2	0,400
04375-10080	20	M10	M12	32	80	110	30	23	30	39,2	0,500
04375-12080	25	M12	M12	40	80	110	40	25	36	49	1,080
04375-12100	25	M12	M12	40	100	130	40	28	36	49	1,280
04375-16080	32	M16	M16	50	80	110	40	25	46	78,4	1,690
04375-16100	32	M16	M16	50	100	130	40	28	46	78,4	2,000

Joint Bars



Material:
Tempered steel
Surface finish:
Black oxide finish
Sample order:
nlm 04378-16050
Note:
The height of the Hook Holders and Hook Clamps can be raised with Joint Bars.

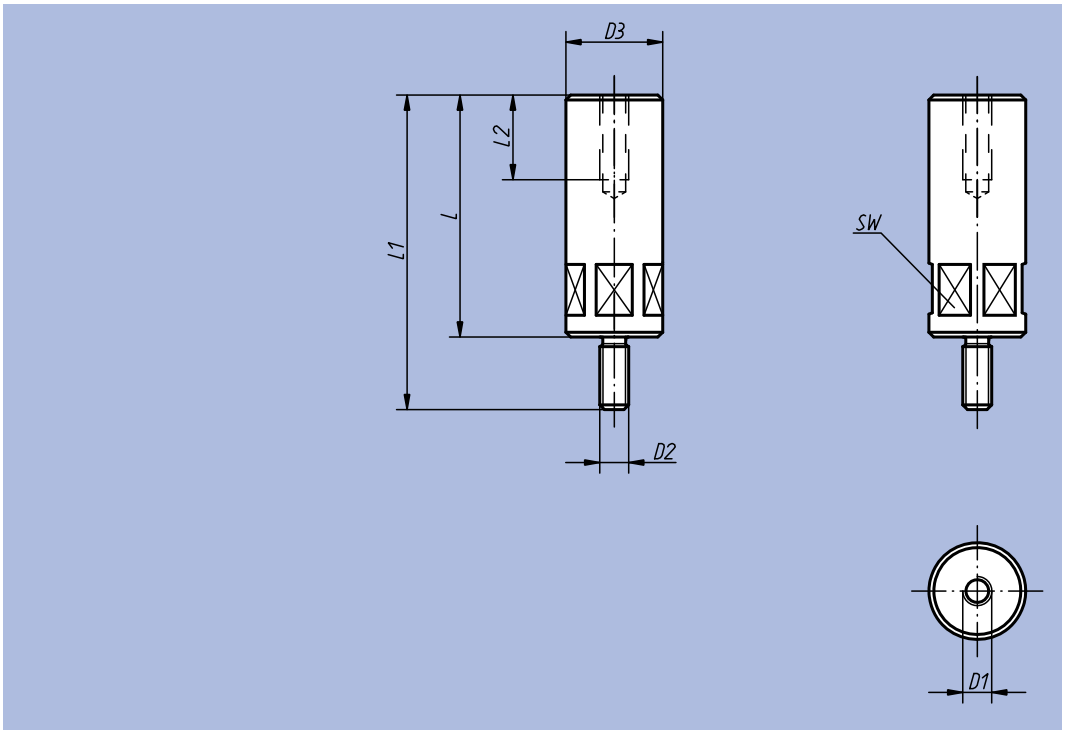

Order No.	D1	D2	D3	L	L1	L2	SW	Tightening torque max. Nm	kg
04378-08032	M8	M8	24	32	51	20	22	29,4	0,105
04378-08040	M8	M8	24	40	59	20	22	29,4	0,135
04378-08050	M8	M8	24	50	69	20	22	29,4	0,170
04378-08065	M8	M8	24	65	84	20	22	29,4	0,225
04378-08080	M8	M8	24	80	99	20	22	29,4	0,275
04378-08100	M8	M8	24	100	119	20	22	29,4	0,345
04378-12050	M12	M12	40	50	80	35	36	49	0,455
04378-12065	M12	M12	40	65	95	35	36	49	0,585
04378-12080	M12	M12	40	80	110	35	36	49	0,725
04378-12100	M12	M12	40	100	130	35	36	49	0,950
04378-12125	M12	M12	40	125	155	35	36	49	1,190
04378-12160	M12	M12	40	160	190	35	36	49	1,530
04378-12200	M12	M12	40	200	230	35	36	49	1,924
04378-16050	M16	M16	50	50	80	35	46	78,4	0,710
04378-16065	M16	M16	50	65	95	35	46	78,4	0,918
04378-16080	M16	M16	50	80	110	35	46	78,4	1,140
04378-16100	M16	M16	50	100	130	35	46	78,4	1,470
04378-16125	M16	M16	50	125	155	35	46	78,4	1,845
04378-16160	M16	M16	60	160	190	35	55	78,4	3,470
04378-16200	M16	M16	60	200	230	35	55	78,4	4,345

Tenter Hook



Material:
Steel

Surface finish:
Case-hardened, black oxide finish and ground

Sample order:
nlm 04380-00

Note:
The precision clamping hooks are used as a clamp in conventional jigs.
To do this, a centring hole is drilled in the body of the device. The depth of the hole is adjusted to the desired clamping level. A support is placed on the rounded part of the hook (radius 22) to take up the counterforce. It can be flat, semicircular or prismatic in shape. A DIN 933 hexagon nut is used to clamp it.

application example:

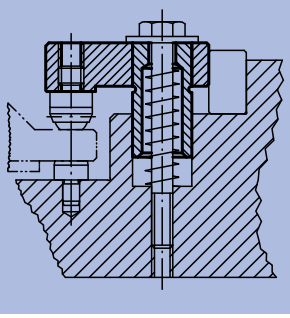

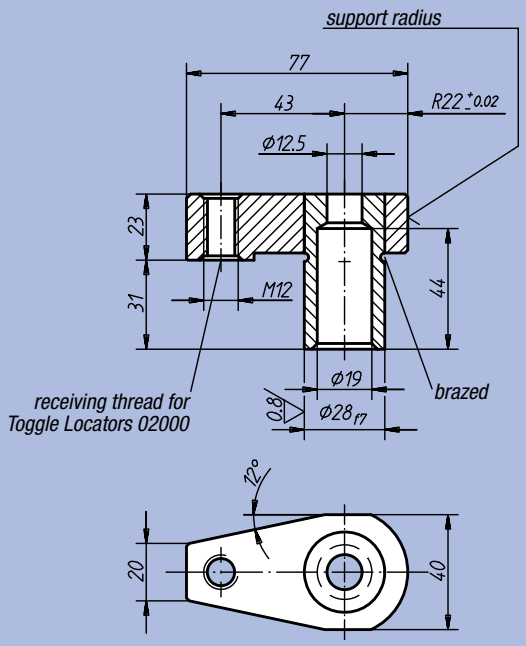

Order No.	kg
04380-00	0,410

Swing Latch Clamps



Material:
Malleable cast iron body,
tempered steel ring 1.1191,
tempered steel screw 1.1181,
hardened steel clamping pad 1.0301

Surface finish:
Paint, clamping pad case-hardened

Sample order:
nlm 04390-01

example:

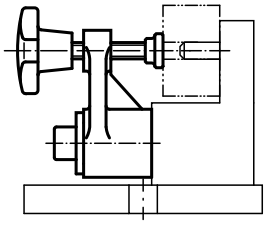

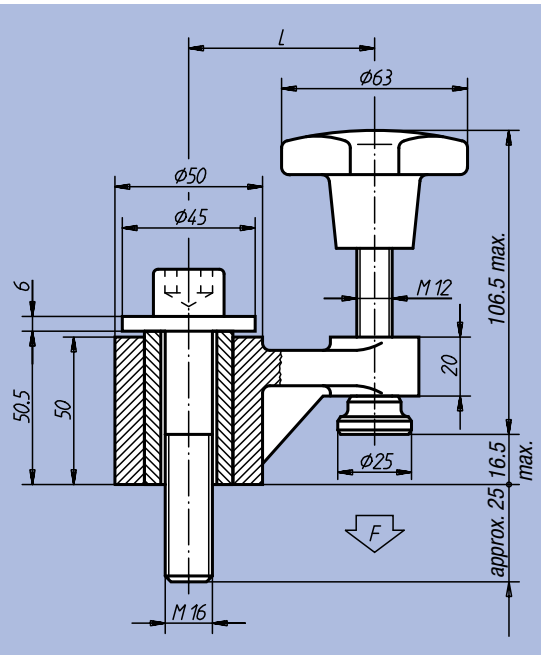

Order No.	L	F kN	kg
04390-01	63	5	1,400
04390-02	100	3	1,600

Clamping bolt



Material:
Clamping bolt, steel
Clamping screw, tempered steel.
Clamping ring, brass.

Surface finish:
Clamping bolt, hardened and black oxide finish. Clamping screw, black oxide finish. Clamping ring, natural finish.

Sample order:
nlm 04395-050

Note:
The clamping bolts can be fixed to the machine table directly with T-slot nuts. Clamping parallel to the table is guaranteed by low tolerance classes (js6) for the height.
The clamping range is 8 – 40 mm. Clamping screws for the ranges 40 – 67 and 65 – 87 mm are also available. The intermediate plate prevents damage to the machine table, as well as shifting during tightening. The brass clamping ring prevents impressions on the workpiece.

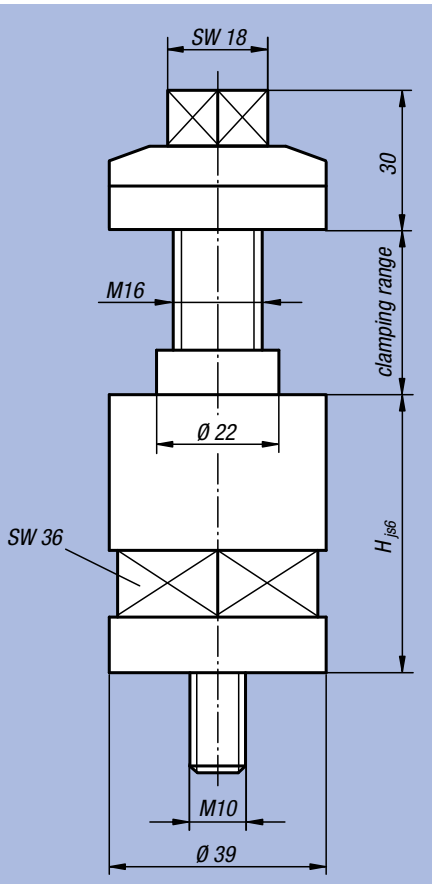



Clamping bolt

Order No.	H	Clamping range	kg
04395-050	50	8 – 40	0,663
04395-100	100	8 – 40	1,115

Clamping screws

Order No.	Clamping range	kg
04395-4067	40 – 67	0,300
04395-6587	65 – 87	0,400

Clamping Pins

Material:
Tempered steel
Surface finish:
Heat-treated and black oxide finish
Sample order:
nlm 04400-005050
Note:
* Customer can adapt the clamping pin according to the work-piece thickness.



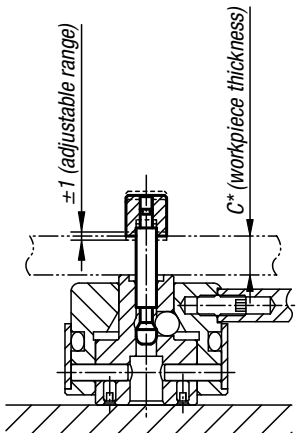

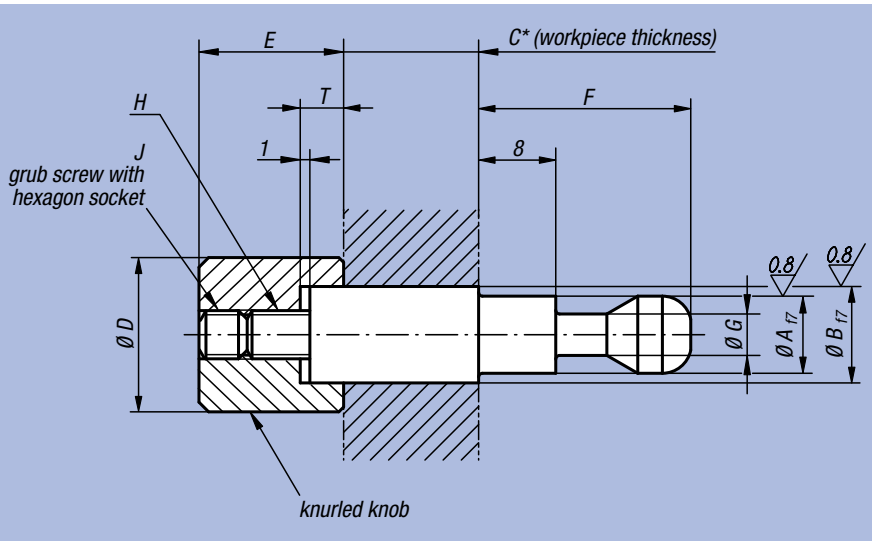

Order No.	A	B	C	D	E	F	G	H	J	T	Suitable for	g
04400-005050	5	5	50	10	10	17	3	M3	M3x4	3	04400-3240...	16
04400-006050	5	6	50	10	10	17	3	M3	M3x4	3	04400-3240...	19
04400-008080	8	8	80	16	15	22	4,3	M5	M5x5	4,5	04400-4050...	60
04400-010080	8	10	80	16	15	22	4,3	M5	M5x5	4,5	04400-4050...	77

nlm 04400

Clamping Pins (Heavy)

Material, surface finish:
Bolt in tempered steel, heat-treated and ground; knurled knob in tempered steel, heat-treated and black oxide finish
Sample order:
nlm 04400-412100
Note:
* Customer can adapt the clamping pin according to the work-piece thickness.



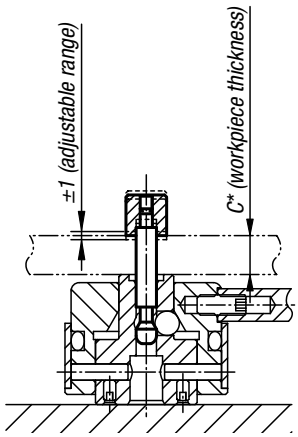

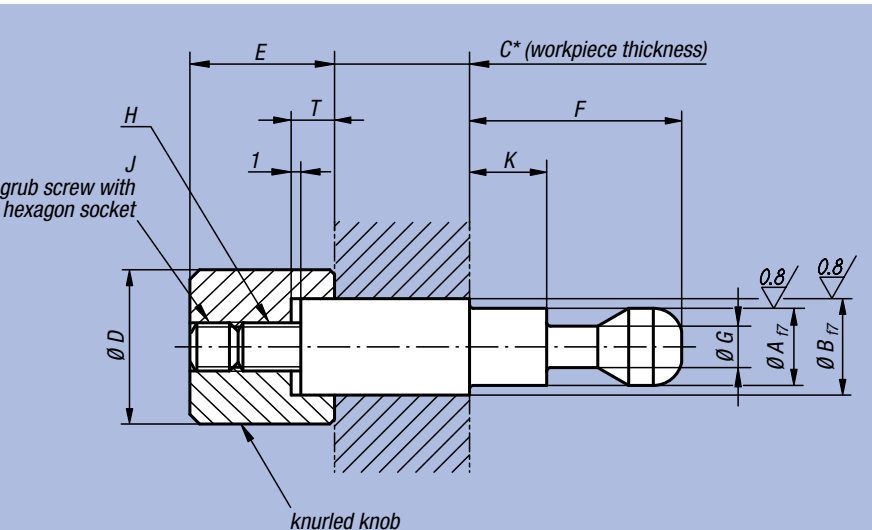

Order No.	A	B	C	D	E	F	G	H	J	K	T	Suitable for	g
04400-412100	12	12	100	18	23	38	6,5	M8	M8x8	21,5	7	04400-506501	70-160
04400-416100	12	16	100	24	23	38	6,5	M8	M8x8	21,5	7	04400-506501	175-265
04400-516120	16	16	120	24	29	48	9,5	M10	M10x10	28	9	04400-638001	160-350
04400-520120	16	20	120	30	29	48	9,5	M10	M10x10	28	9	04400-638001	325-515

Clamping Screws



Material:
Tempered steel
Surface finish:
Heat-treated and black oxide finish
Sample order:
nlm 04400-105060

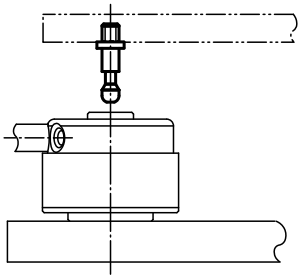

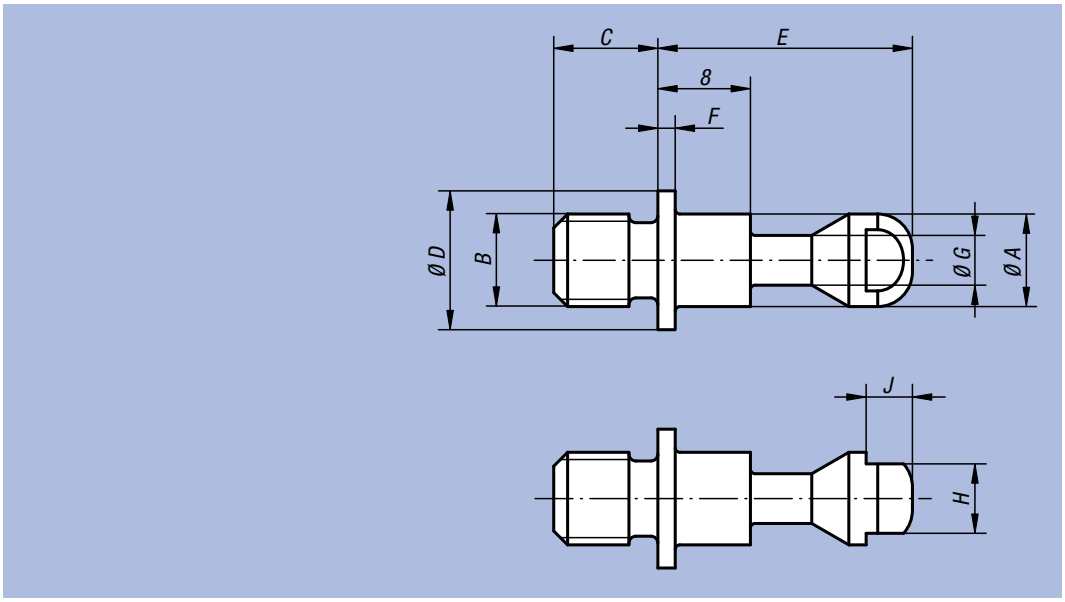

Order No.	A	B	C	D	E	F	G	H	J	Suitable for	g
04400-105060	5	M5	6	8	17	1,2	3	4	2,5	04400-3240...	3
04400-106070	5	M6	7	8	17	1,2	3	4	2,5	04400-3240...	4
04400-108090	8	M8	9	12	22	1,5	4,3	6	4	04400-4050...	10
04400-110110	8	M10	11	12	22	1,5	4,3	6	4	04400-4050...	13

nlm 04400

Clamping Screws (Heavy)



Material:
Tempered steel
Surface finish:
Heat-treated and black oxide finish
Sample order:
nlm 04400-1412013

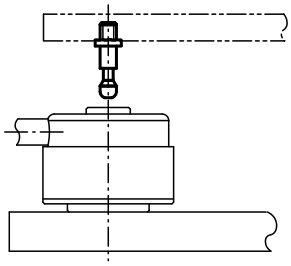

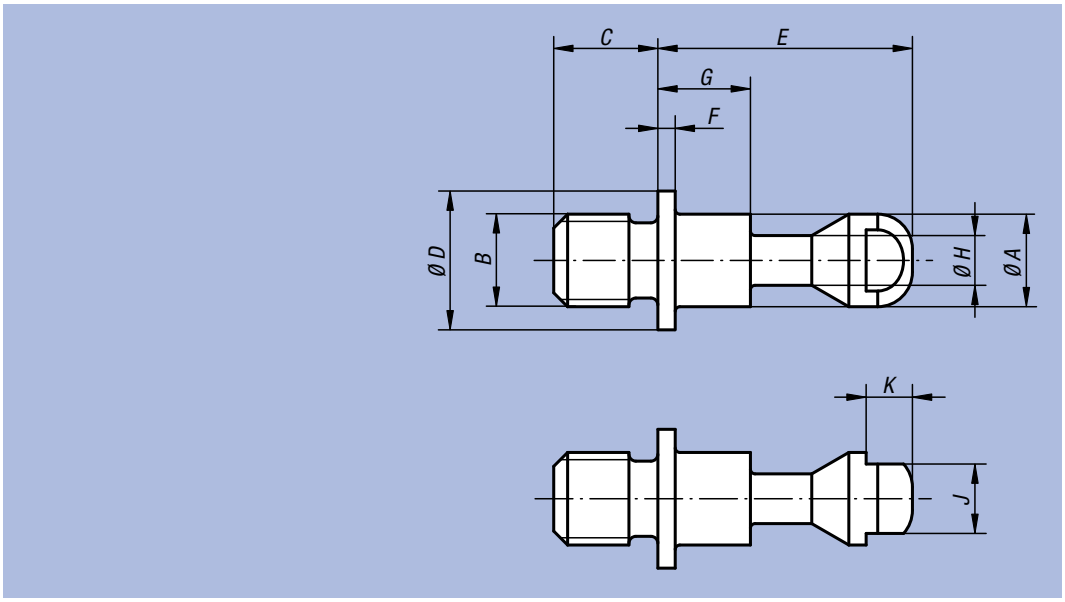

Order No.	A	B	C	D	E	F	G	H	J	K	Suitable for	g
04400-1412013	12	M12	13	20	38	2	21,5	6,5	10	4	04400-506501	40
04400-1416017	12	M16	17	20	38	2	21,5	6,5	10	4	04400-506501	55
04400-1516017	16	M16	17	25	48	2,5	28	9,5	13	5	04400-638001	90
04400-1520021	16	M20	21	25	48	2,5	28	9,5	13	5	04400-638001	110

Mounting Plates

for pull clamp



Material:
Tempered steel
Surface finish:
Black oxide finish;
support surfaces ground
Sample order:
nlm 04400-206308

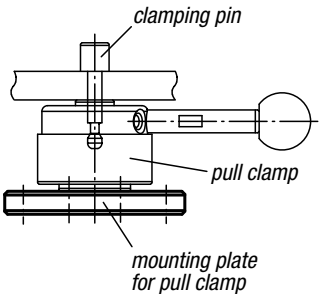

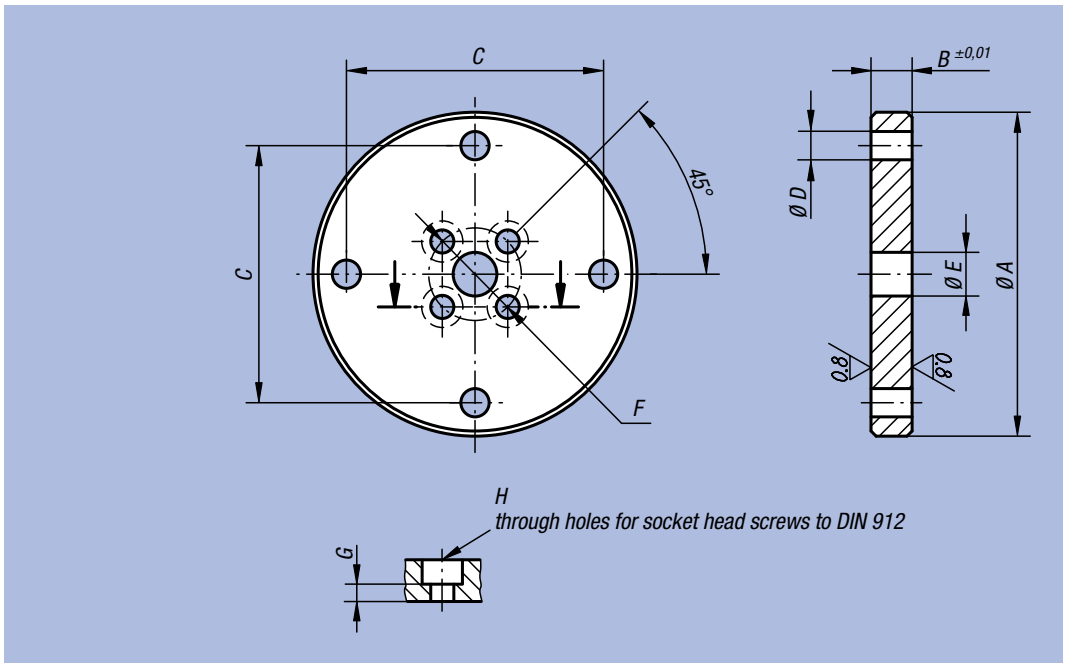

Order No.	A	B	C	D	E	F	G	H	Suitable for	kg
04400-206308	63	8	50	5,5	8,5	18	3,5	M4	04400-3240...	0,180
04400-208010	80	10	65	9	12,5	25	3,5	M6	04400-4050...	0,350

nlm 04400

Mounting Plates (Heavy)

for pull clamp



Material:
Tempered steel
Surface finish:
Black oxide finish;
support surfaces ground
Sample order:
nlm 04400-2105013

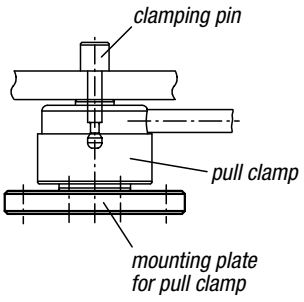

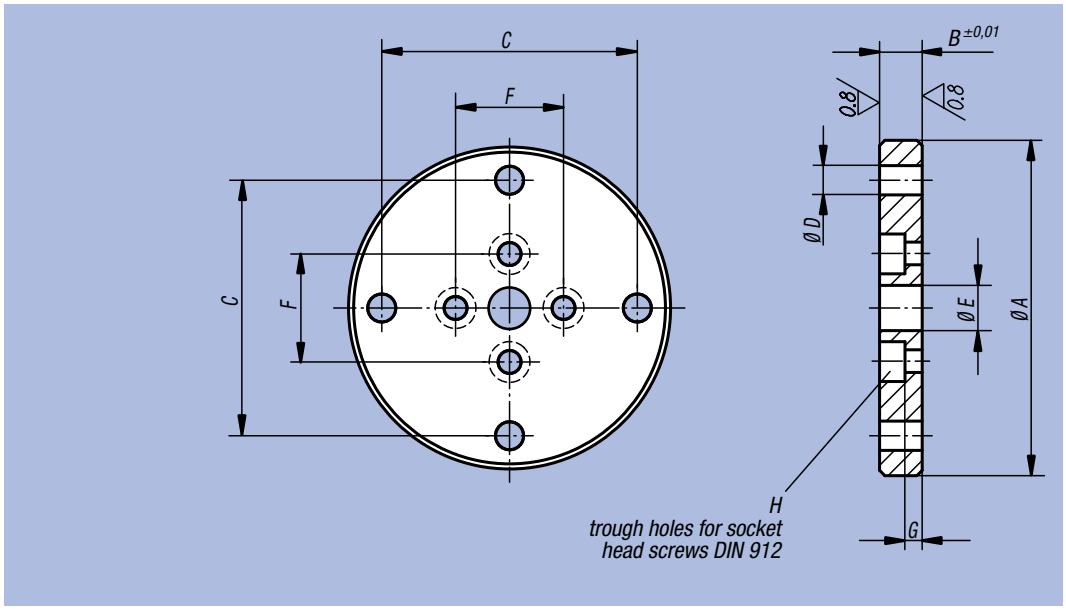

Order No.	A	B	C	D	E	F	G	H	Suitable for	kg
04400-2105013	105	13	85	11	13	40	4	M8	04400-506501	0,770
04400-2130017	130	17	105	13	17	50	6	M10	04400-638001	1,550

Pull Clamps



Material, surface finish:
Housing and cam in hardened tool steel, black oxide finish; handle in tempered steel, black oxide finish; ball knob in black duroplastic PF 31

Sample order:
nlm 04400-324001

Note:
* Max. workpiece thickness, see clamping pin 04400 (dimension C).
** Admissible hand force to operate the handle.

Accessory:
Standard handles 06355. Screw-in handles with adjustable torque 06357.

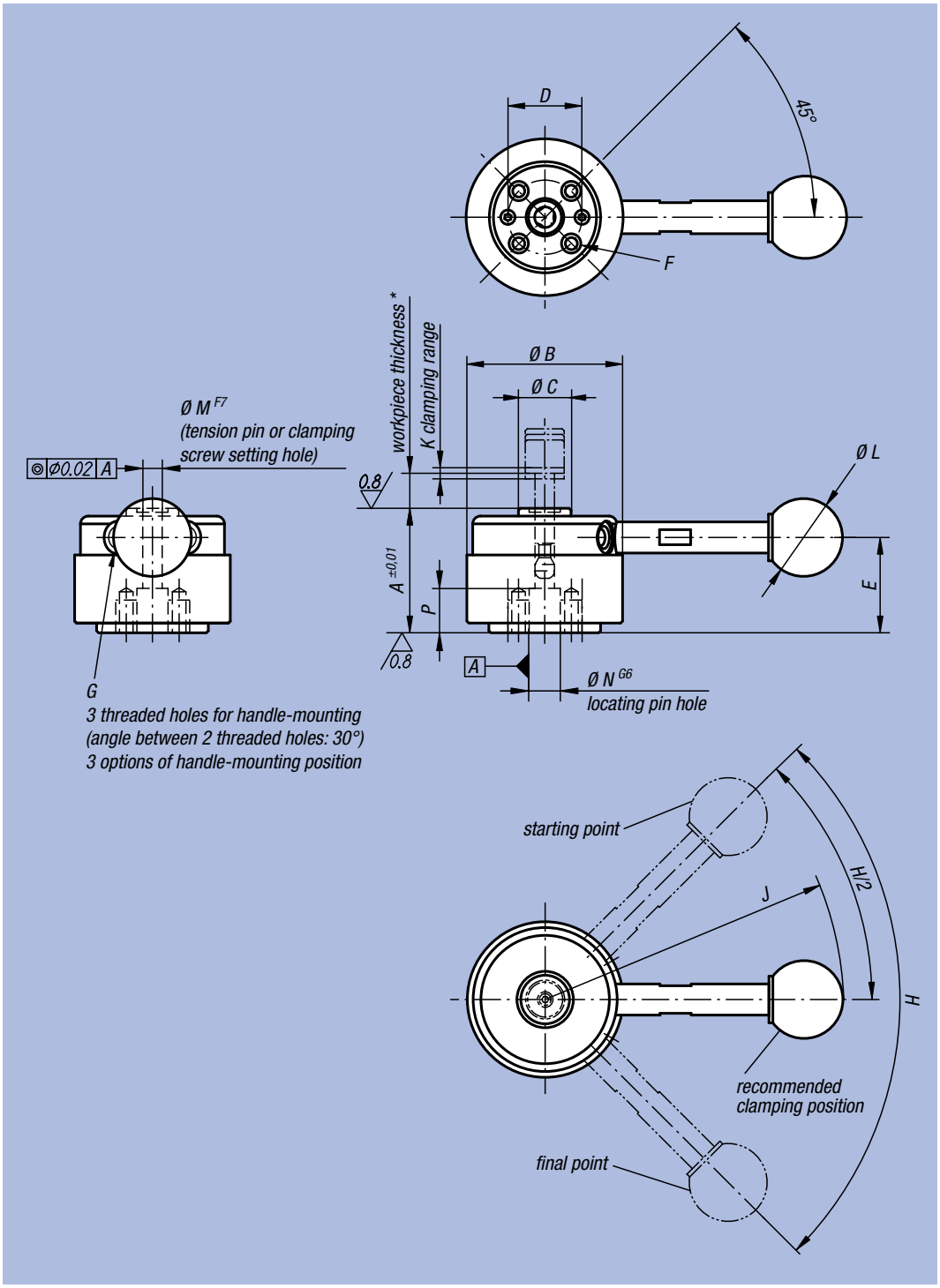

Order No.	Surface finish	A	B	C	D	E	F	G	H	J	K	L	M	N	P	Clamping force N	Recommended workpiece thickness tolerance	Hand force N	Holding force N	kg
04400-324000	without handle	32	40	13,5	18	24,5	M4x8	M5	90°	76,5	1,5	20	5	8	10	900	±0,3*	150**	2000	0,200
04400-324001	with handle	32	40	13,5	18	24,5	M4x8	M5	90°	76,5	1,5	20	5	8	10	900	±0,3*	150**	2000	0,230
04400-405000	without handle	40	50	18	25	30,7	M6x9	M6	110°	111,5	2	25	8	12	13	2500	±0,5*	200**	5500	0,420
04400-405001	with handle	40	50	18	25	30,7	M6x9	M6	110°	111,5	2	25	8	12	13	2500	±0,5*	200**	5500	0,480

Pull Clamps (Heavy)



Material, surface finish:
Housing and clamping ring in tempered steel, hardened and black oxide finish; rod in tempered steel, black oxide finish; handle in black duroplastic PF 31

Sample order:
nlm 04400-506501

Note:
Maintaining these recommended tolerances allows minimizing the variation of handle position in the clamping mode in clamping with the use of the clamping pin.

* Max. workpiece thickness, see clamping pin 04400 (dimension C).
** Admissible hand force to operate the handle.

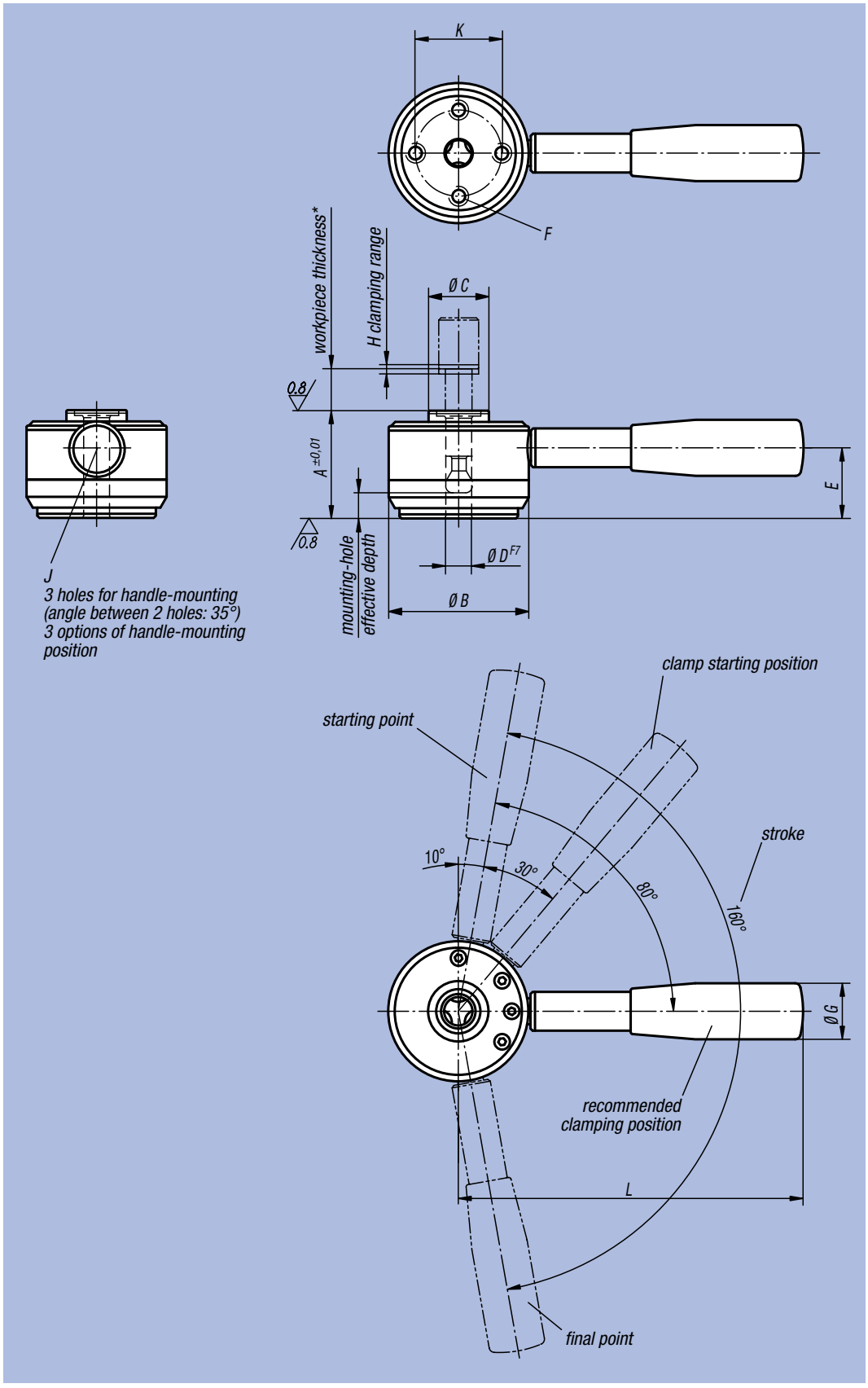

Order No.	A	B	C	D	E	F	G	H	J	K	L	Clamping force N	Recommended workpiece thickness tolerance	Hand force N	Holding force N	kg
04400-506501	50	65	28	12	36	M8x14	26	2	10	40	160	6000	±0,5*	600**	8000	1,200
04400-638001	63	80	34	16	45	M10x18	28	2,5	12	50	180	8000	±0,8*	600**	14000	2,200

Technical Information for Pull Clamps

Workpiece positioning

Clamping by means of tension clamp and tension pin

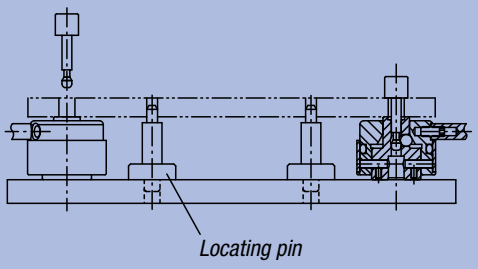

Simultaneous clamping and positioning of a workpiece

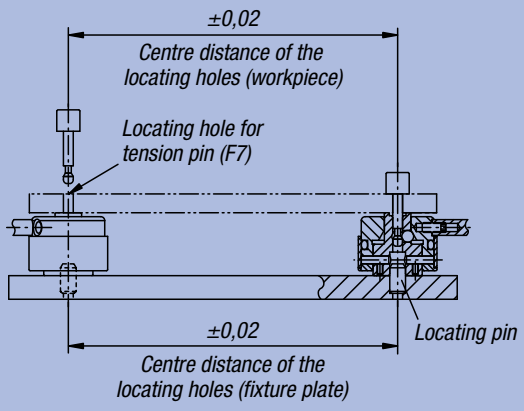

Holding forces for workpiece processing

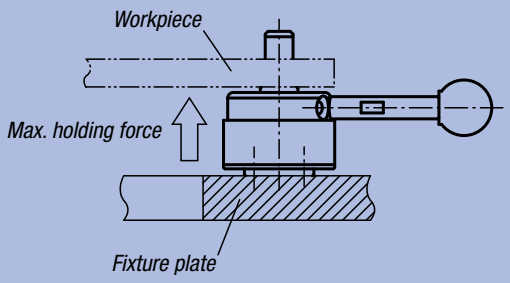

Make sure that no force exceeding the values in the table is affecting the bottom of the workpiece.

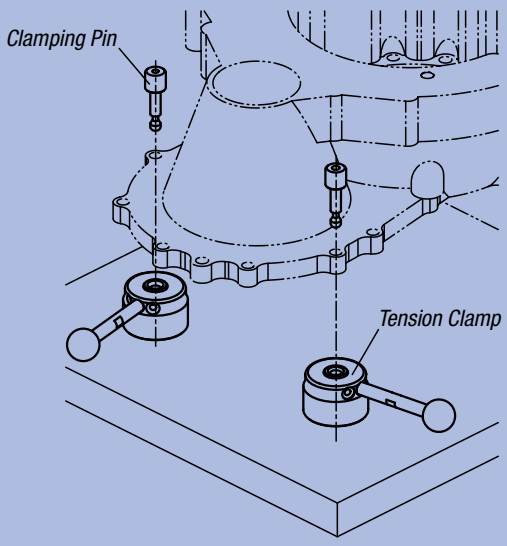

Application using Pull Clamps

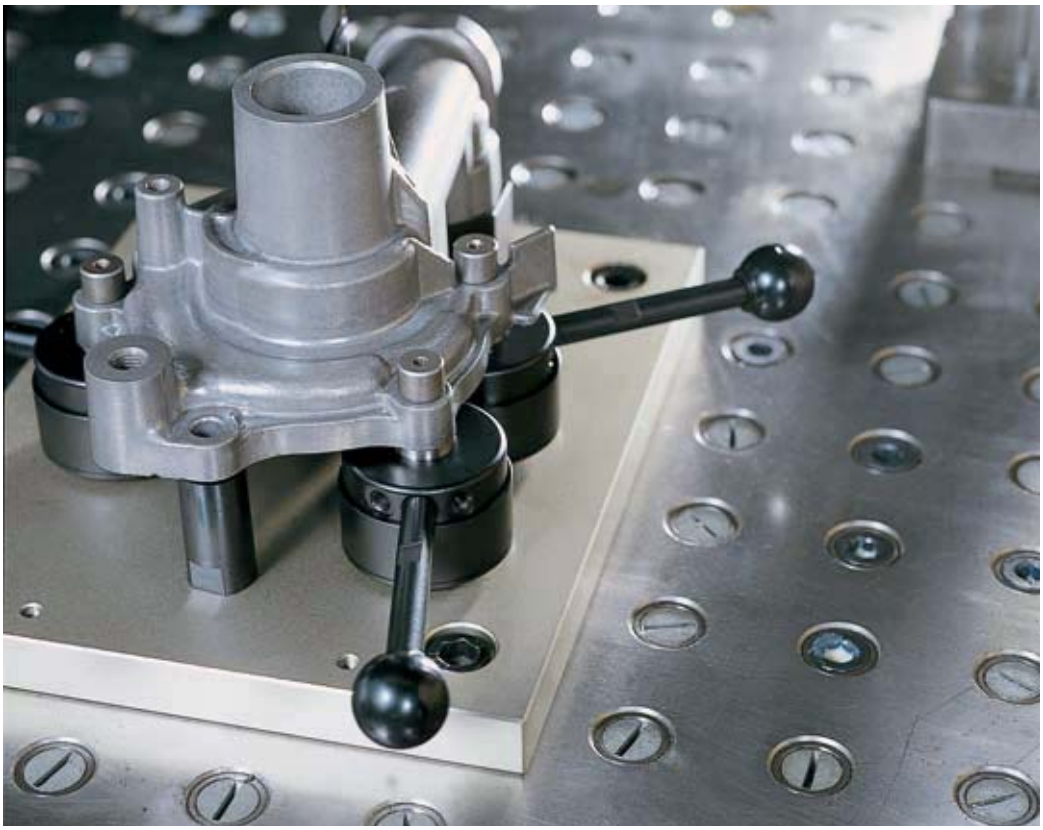

Notes:

“Actima“ Clamping Device



Material, surface finish:
Steel black oxide finish;
housing in black thermoplastic;
ball knob in red duroplastic PF 31;
accessories in steel black oxide finish

Sample order:
nlm 04410-10

Note:
The travel path is 10 mm. Self-locking occurs in any position within only 2 mm of clamp travel. Thus workpieces with tolerances of up to 1.5 mm can be safely clamped. The “Actima“ Clamping Device can be fitted in any horizontal or vertical position.
Standard parts allow further applications. They are available as optional accessories. All parts of the cam system subject to heavy loads are case-hardened (pressure sleeve and accessories only if specified). The maximum permissible clamping force is approximately 4905 N.

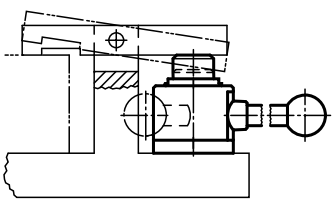

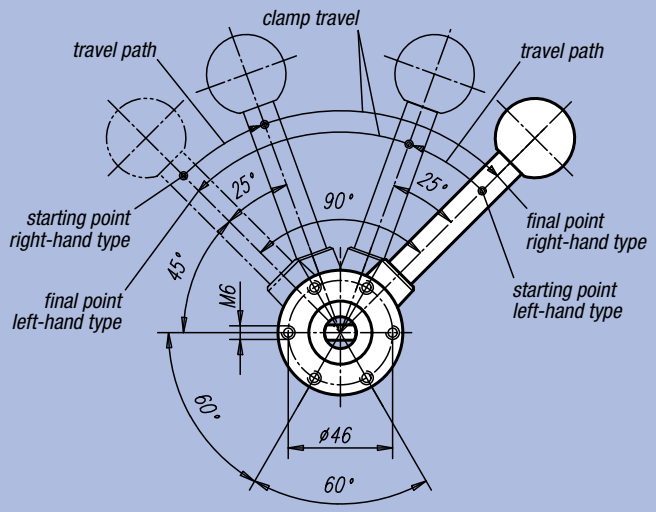

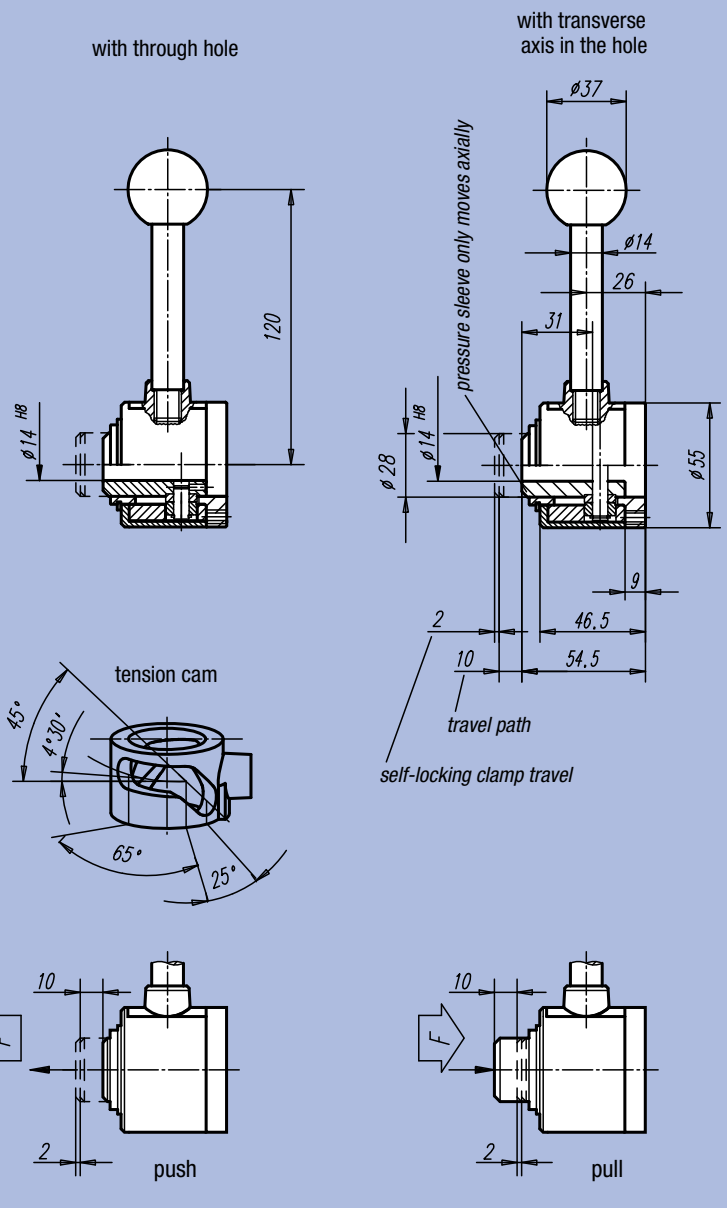

“Actima“ Clamping Device

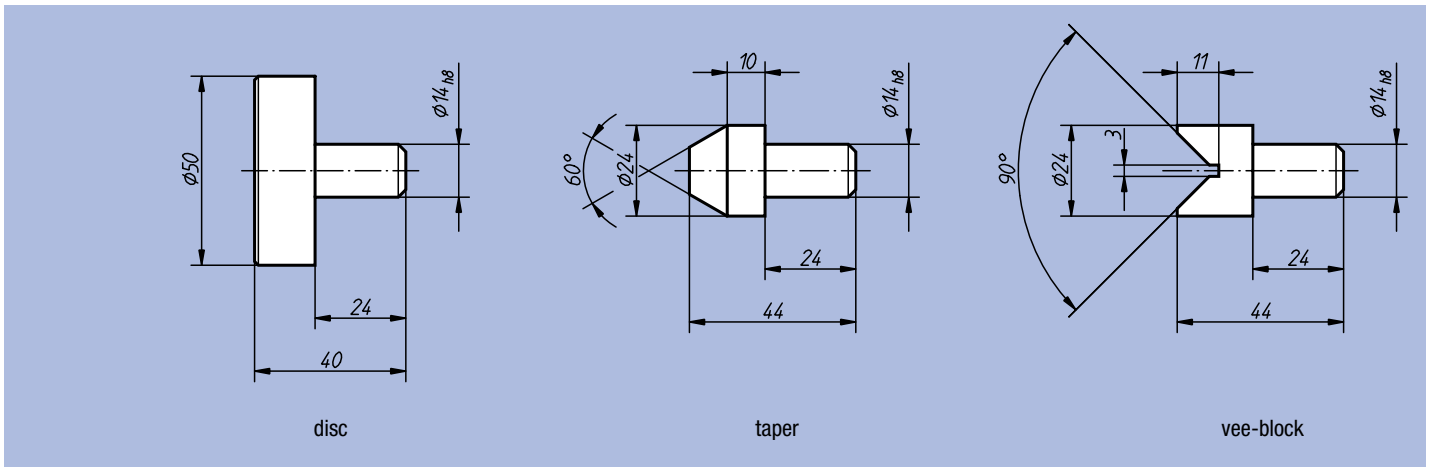

disc taper vee-block

“Actima” Clamping Device with transverse axis in the hole

Order No.	Surface finish	kg
04410-10	right-hand / push	0,865
04410-15	right-hand / pull	0,865
04410-20	left-hand / push	0,865
04410-25	left-hand / pull	0,865

“Actima” Clamping Device with through hole

Order No.	Surface finish	kg
04410-30	right-hand / push	0,855
04410-35	right-hand / pull	0,855
04410-40	left-hand / push	0,855
04410-45	left-hand / pull	0,855

“Actima” Accessories

Order No.	Product	kg
04410-02	disc	0,275
04410-03	taper	0,085
04410-04	vee-block	0,080

Floating Clamps



Material:
Base body and clamping jaw in hardened steel; housing in aluminium

Surface finish:
Base body nitrided, black oxide finish and ground; clamping jaws nitrided and black oxide finish; housing red anodized

Sample order:
nlm 04420-100812

Note:
The floating clamp is used to clamp and support over-determined clamping points on components.

Method of operation:
1. Push the floating clamp downwards.
2. Pivot the clamping jaws in as far as possible. The floating clamp contacts the bottom of the work-piece with a light spring force.
3. Tighten the floating clamp with a hexagon nut (SW 18; please note the minimum and maximum torque). In the clamping process, the work-piece is clamped and simultaneously supported.
4. Releasing is done in reverse order.

Installation:
Fix the floating clamp with connection thread M12 onto the device.
Adjust the height limit stop and the swivelling range with the red setting sleeve and clamp with a grub screw (3x SW 2.5). When setting the height limit, take a generous clearance to the top into account.
For safe operation, the threaded hole M12 must always be closed.
For specific clamping situations, the standard clamping jaws can be amended or replaced.

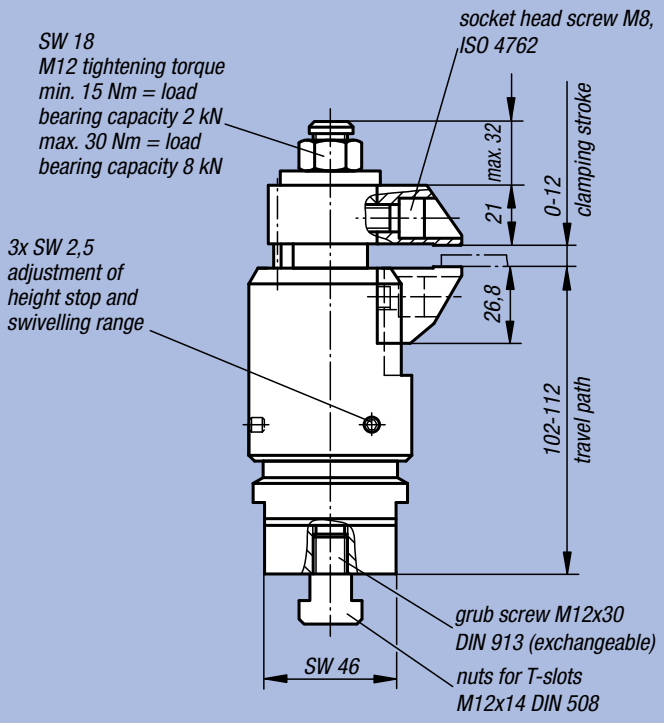

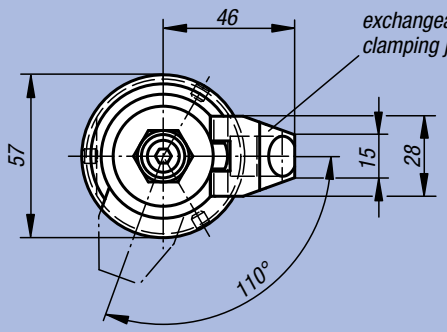

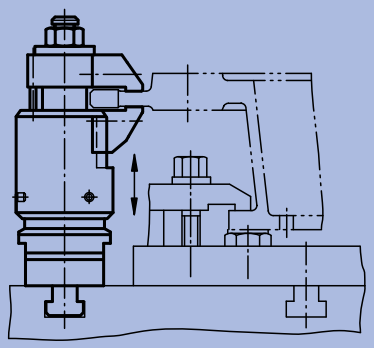

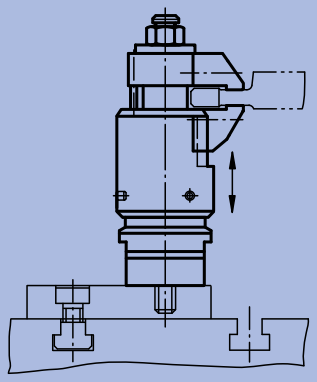

Order No.	Travel path	max. clamping stroke	Load bearing capacity N	Clamping force N	kg
04420-100812	10	12	8000	8000	1,820

Floating Clamp

with separate clamp and locking



Material:
Base body and clamping jaw in hardened steel; housing in aluminium

Surface finish:
Base body nitrided, black oxide finish and ground; clamping jaws nitrided and black oxide finish; housing blue anodized

Sample order:
nlm 04421-100812

Note:
The floating clamp is used to clamp and support over-determined clamping points on extremely pliable, responsive components.

Method of operation:
1. Push the floating clamp downwards.
2. Pivot the clamping jaws in. The bottom jaw contacts the workpiece with a light spring force.
3. Tighten the hexagon nut (SW 18). The jaws are clamping the workpiece, the clamp is still floating.
4. Thereafter tighten the hexagon nut (SW 10). The workpiece clamping process is terminated.
5. Releasing is done in reverse order.

Installation:
Fix the floating clamp with connection thread M12 onto the device.
Adjust the height limit stop and the swivelling range with the blue setting sleeve and clamp with a grub screw (3x SW 2.5). When setting the height limit, take a generous clearance to the top into account.
For safe operation, the threaded hole M12 must always be closed.
For specific clamping situations, the standard clamping jaws can be amended or replaced.

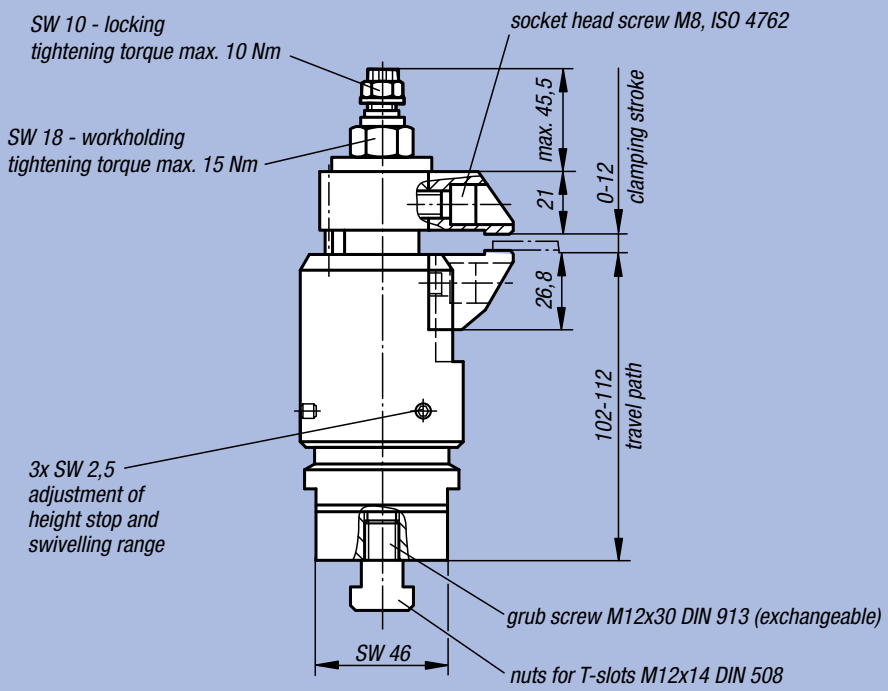

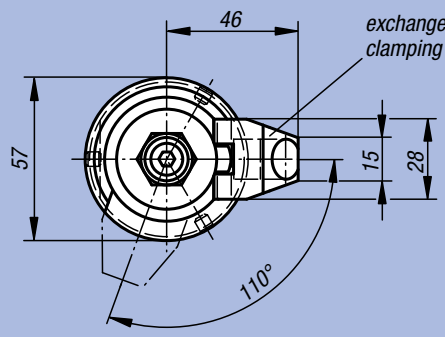

example:

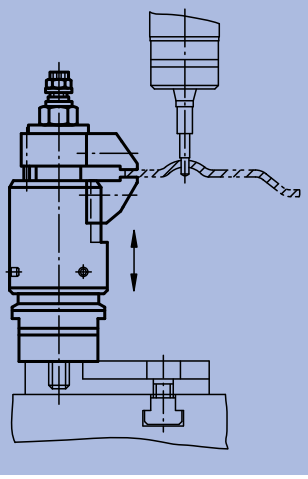

Order No.	Travel path	max. clamping stroke	Load bearing capacity N	Clamping force N	kg
04421-100812	10	12	8000	8000	1,830

Clamping Jaws

for floating clamp



Material:
Hardened steel
Surface finish:
Nitrided and black oxide finish
Sample order:
nlm 04422-90000
Note:
The clamping jaws can be used for floating clamps to increase the clamping range.

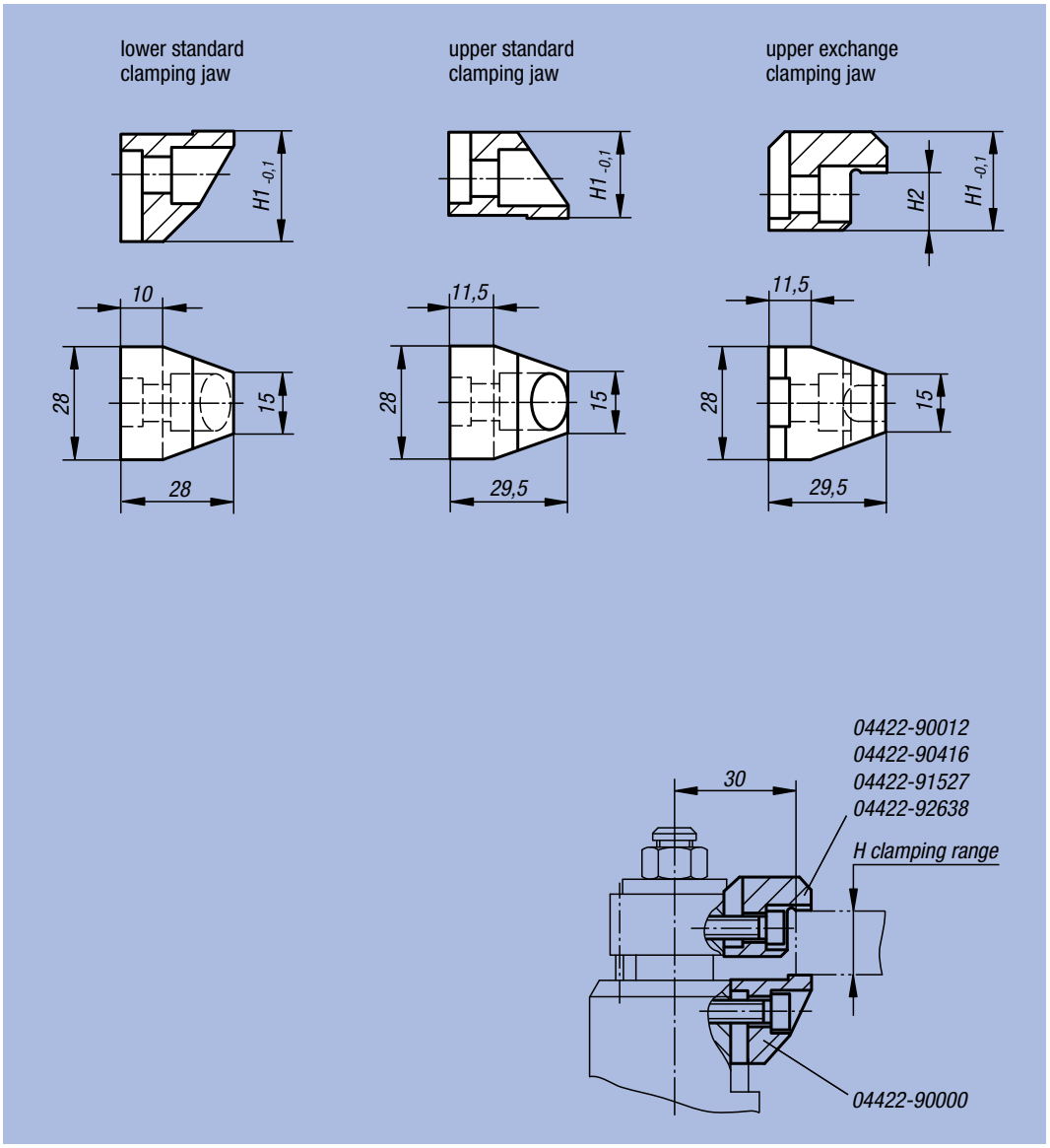

Order No.	Surface finish	H clamping range	H1	H2	kg
04422-90000	lower standard clamping jaw	-	26,8	-	0,082
04422-90012	upper standard clamping jaw	0 - 12	21	-	0,071
04422-90416	upper exchange clamping jaw	4 - 16	24,5	3,5	0,093
04422-91527	upper exchange clamping jaw	15 - 27	24,5	14,5	0,089
04422-92638	upper exchange clamping jaw	26 - 38	35,5	25,5	0,131

Notes:

“Arness“ Clamping Device



Material:
Steel, ball knob in duroplastic PF 31

Surface finish:
Housing in silver-grey hammertone finish,
all other parts including accessories in black oxide finish,
red ball knob

Sample order:
nlm 04430-01

Note:
The travel path is 12 mm. Self-locking occurs in any position within only 1.5 mm of clamp travel. Thus workpieces with tolerances of up to 1 mm can be safely clamped. The “Arness“ Clamping Device can be fitted in any horizontal or vertical position.
In order to achieve an individual adaptation for various circumstances, several standard parts have been developed and are available as optional accessories. The pressure button and all parts of the cam system subject to heavy loads are case-hardened.
The maximum permissible clamping force is approximately 4905 N.

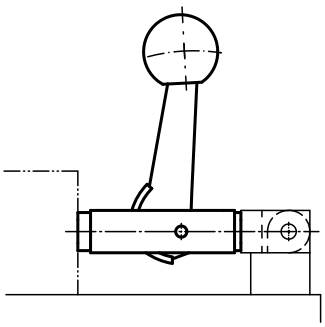

"Arness" Clamping Device 04430-01

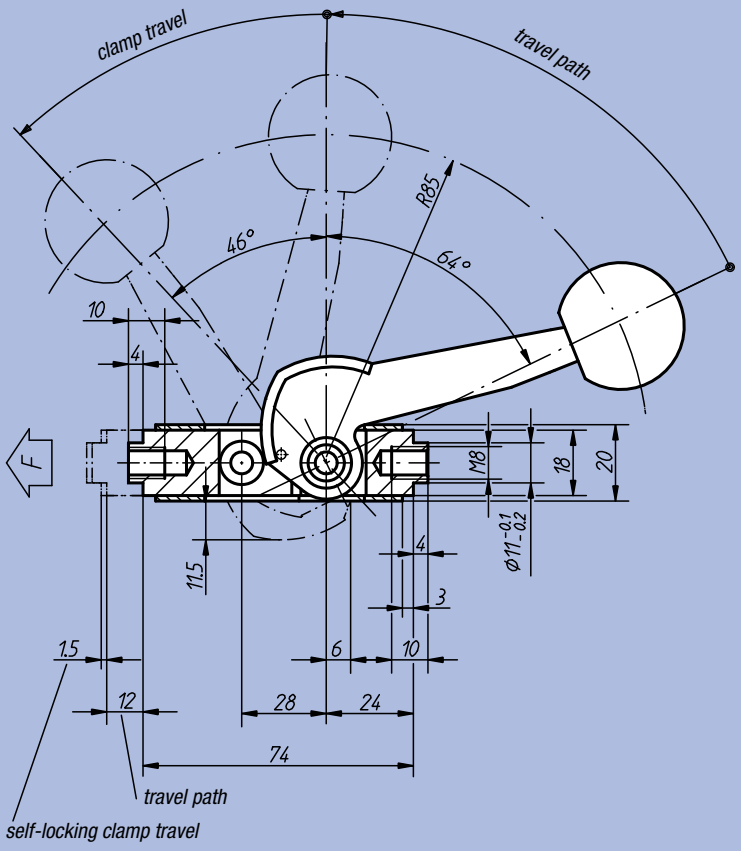

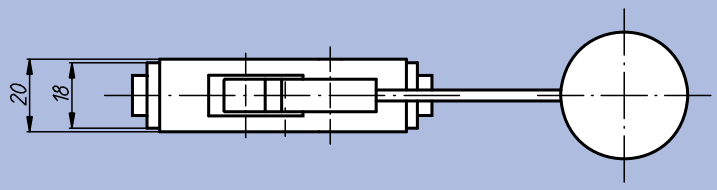

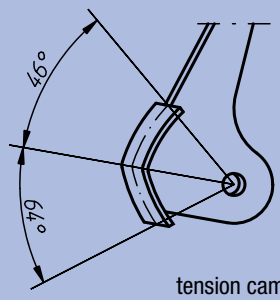

tension cam

“Arness“ Clamping Device

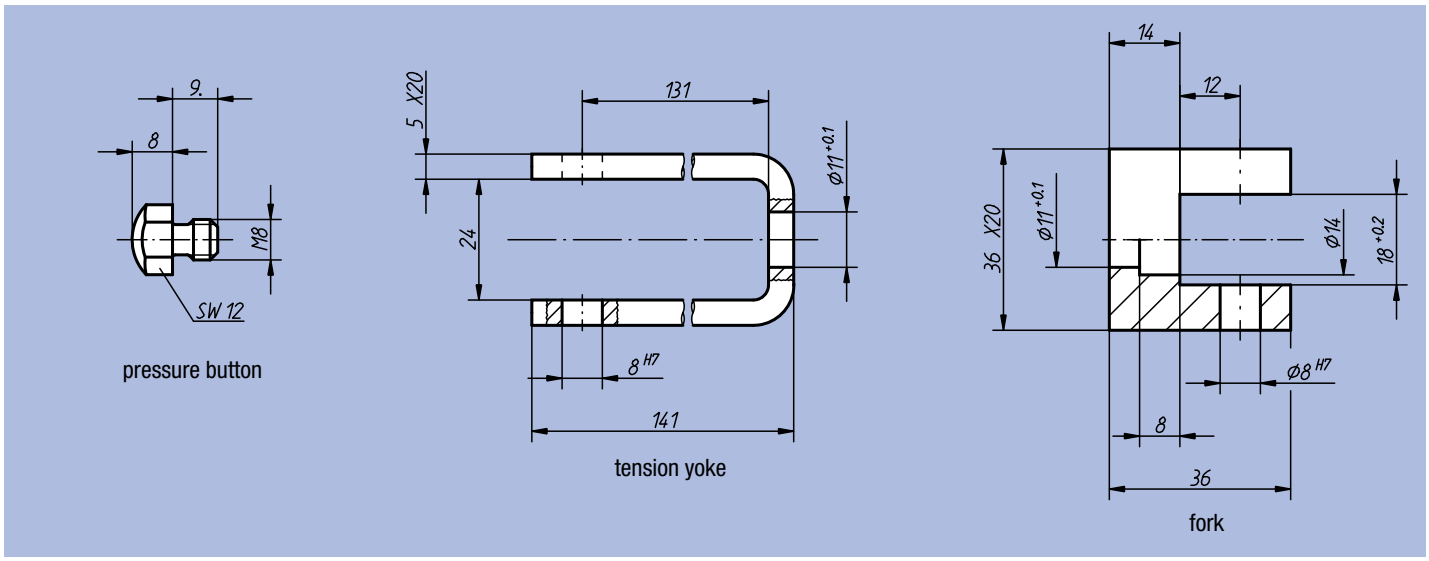

“Arness“ Clamping Device

Order No.	kg
04430-01	0,250

“Arness“ Accessories

Order No.	Product	kg
04430-02	fork	0,120
04430-03	tension yoke	0,250
04430-04	pressure-button	0,010

Positive Clamping Eccentric



Material, surface finish:
Hex cam hardened steel, black oxide finish; clamping disc steel, black oxide finish

Sample order:
nlm 04431-06

Note:
The Clamping Eccentric has a washer that can be milled to match the contour of the workpiece to be clamped. This results in positive clamping for round, contoured or unstable workpieces. The flattened edge has the same distance from the screw centre as the Low-profile Equal Hexagonal Cam Clamp 04435, so that the disc can be exchanged if needed.
The scope of delivery includes a clamping screw for the milling operation.
"A" = distance from workpiece to the centre of the thread (clamping screw).
"D1 min." = dimension available for contour milling.

On request:
Spare eccentric screws.

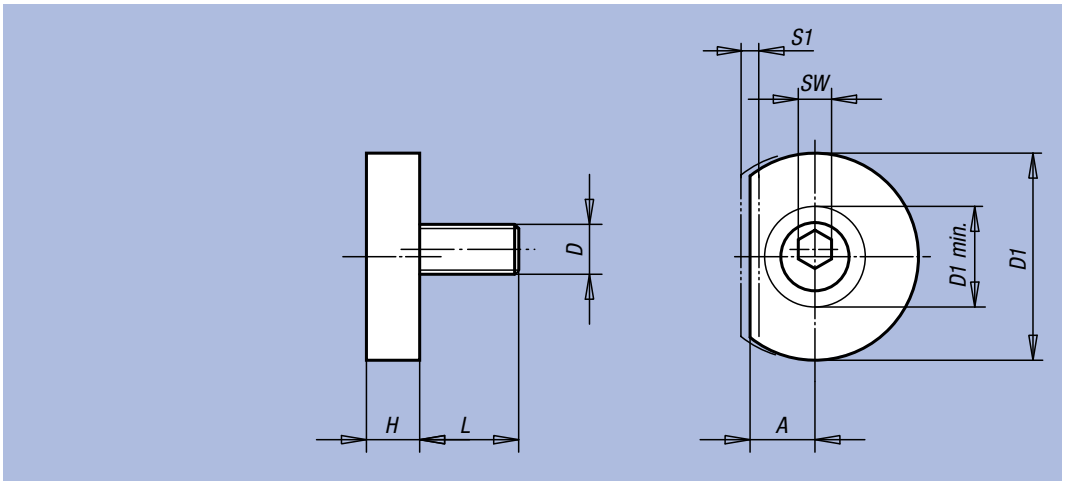

Order No.	A	D	D1	D1 min.	H	L	SW	S1 (Clamping travel)	Clamping force kN	kg
04431-06	7,8	M6	24,9	12,1	6,4	11,9	4	1,01	3,6	0,025
04431-10	10,2	M10	31,2	17,2	8,9	18	7	1,52	9	0,055
04431-12	12,7	M12	37,6	22,4	11,4	22,9	8	2,03	18	0,080
04431-16	15	M16	43,9	26,1	14	28,6	12	2,54	27	0,180

Unequal Hexagonal Cam Clamps



Material, surface finish:
Eccentric screw heat-treated class 10.9, black oxide finish; hexagonal cam hardened steel, hardened and black oxide finish

Sample order:
nlm 04432-13

Note:
The Unequal Hexagonal Cam Clamps are used to minimise the cost of clamping systems. The fastening range can be adjusted within a 17 mm diameter without moving the bore, simply by rotating the variable hexagonal element.
The clamps are available with flat edges for machined pieces and with notched edges for rough pieces.

On request:
Spare eccentric screws.

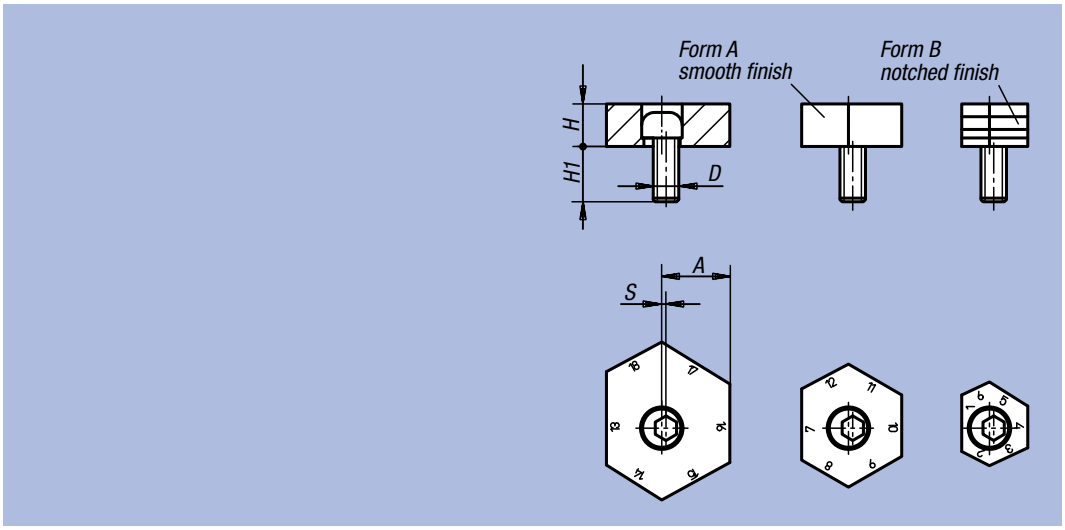

Order No. Form A	Order No. Form B	Centre-to-centre distance A for edge variant No.	D	H	H1	S (Eccentric path)	Clamping force kN
04432-09	04432-13	1/12, 2/13, 3/14, 4/15, 5/16, 6/17	M12	10	22	1	18
04432-10	04432-14	7/18, 8/19, 9/20, 10/21, 11/22, 12/23	M12	10	22	1	18
04432-11	04432-15	13/24, 14/25, 15/26, 16/27, 17/28, 18/29	M12	10	22	1	18

Spiral Edge Clamping Screws



Material:
Hardened steel
Surface finish:
Case-hardened (56 ±1 HRC) and blue galvanized
Sample order:
nlm 04433-04012
Note:
Strong and tight spiral edge clamping screws that afford downward-pressure clamping on the most diverse types of workpieces.
Installation:
Make one or more thread holes in space X or Z as suggested. Screw clamping screw to the required height and place with the flat side to the workpiece. Place the workpiece and tighten clamping screw at the hexagon socket. With an approximately 1/3 turn the clamping is done. The threaded hole is to be greased regularly.

During clamping, circular motion must always be actioned in the direction of the stops in order to prevent the workpiece from turning away from the stops.
On request:
Spiral Edge Clamping Screws with left-hand thread

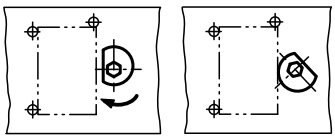

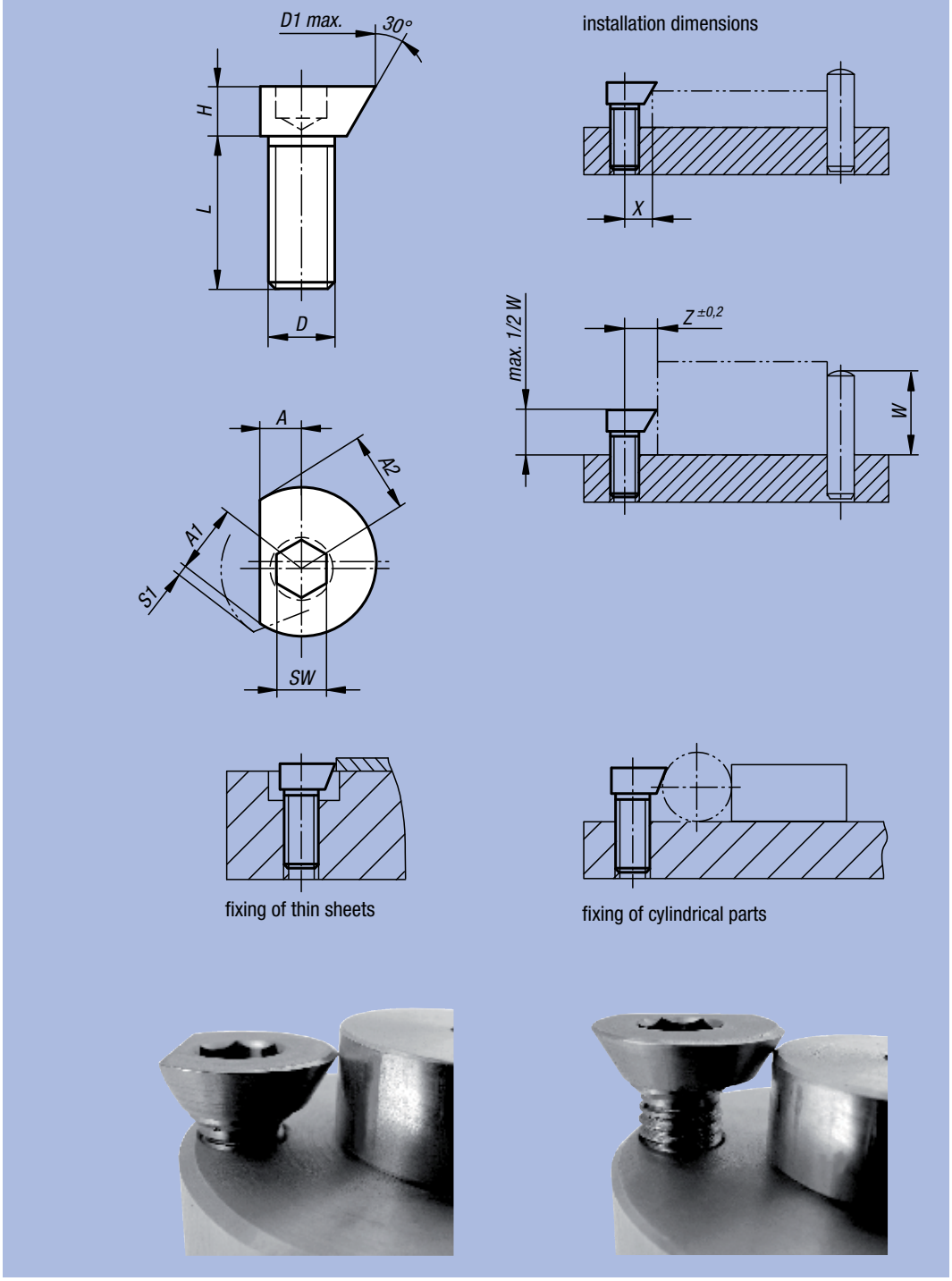

Order No.	A	A1	A2	D	D1 max.	H	L	SW	S1 (Clamping travel)	X	Z	Clamping force kN	Tightening torque max. Nm	kg
04433-04012	2,6	4,8	5,5	M4	11	4	12	3	0,7	4	5	0,1	2	0,002
04433-06016	5	6,7	7,8	M6	15,6	5,5	16	5	1,1	5,9	7	0,4	6	0,006
04433-08020	5,8	8,3	9,6	M8	19,1	6,5	20	6	1,3	7,1	8,6	3	25	0,012
04433-10024	6,3	9,8	11,8	M10	23,7	8	24	8	2	8,5	10,3	4,5	40	0,021
04433-12018	8,5	11,7	13,6	M12	27,3	9	18	10	1,9	10,1	12,2	6	55	0,030
04433-12030	8,5	11,7	13,6	M12	27,3	9	30	10	1,9	10,1	12,2	5	45	0,043
04433-16024	10,7	15,6	17,7	M16	35,4	12	24	14	2,1	13,2	16,2	10	90	0,078
04433-16040	10,7	15,6	17,7	M16	35,4	12	40	14	2,1	13,2	16,2	7,5	70	0,085

Knife Edge Cam Clamps



Material:
Case hardened steel notched ring, eccentric screw treated steel

Surface finish:
Eccentric screw heat-treated quality class 10.9, black oxide finish; hardened anodized notched ring

Sample order:
nlm 04434-16

Note:
The notched ring is fully suitable for fastening rough pieces (mouldings or rough forging).

"A" = distance from workpiece to the centre of the thread (clamping screw).

On request:
Spare eccentric screws.

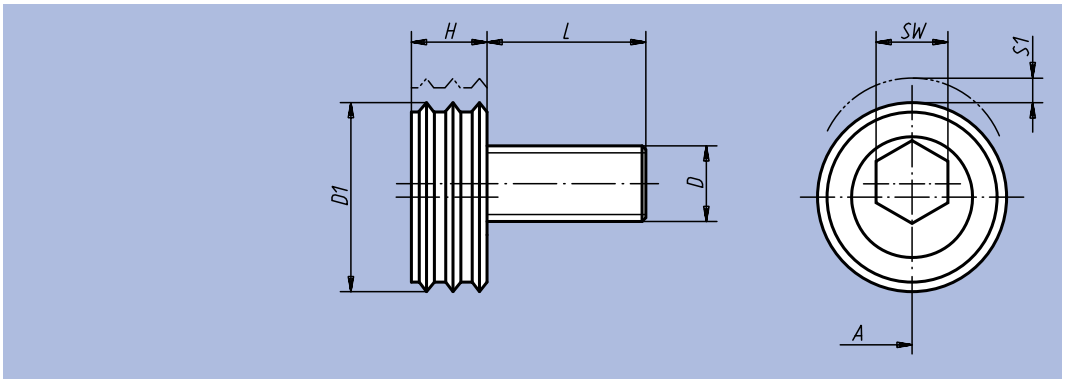

Order No.	A	D	D1	L	H	SW	S1 (Clamping travel)	Clamping force kN	Tightening torque max. Nm	kg
04434-12	12,7	M12	25,4	22,5	9,6	8	2	17,8	88	0,045
04434-16	15	M16	30,1	26,8	12,7	12	2,5	26,7	135	0,090

Low-profile Equal Hex Cam Clamps



Material:
Eccentric screw tempered steel, brass hexagonal nut

Surface finish:
Eccentric screw heat-treated class 10.9, black oxide finish

Sample order:
nlm 04435-12

Note:
The very small height of the cam clamp makes it possible to solve a large number of problems with small pieces and nesting. The brass fastening nut offers extremely safe and stable fastening, at the same time keeping the surface protected. The simultaneous use of several cam clamps makes it possible to fit out whole pallets.

"A" = distance from workpiece to the centre of the thread (clamping screw).

On request:
Spare eccentric screws.

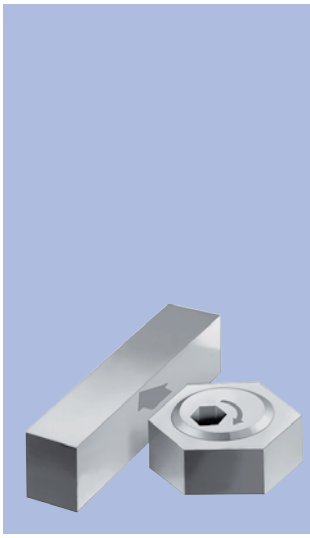

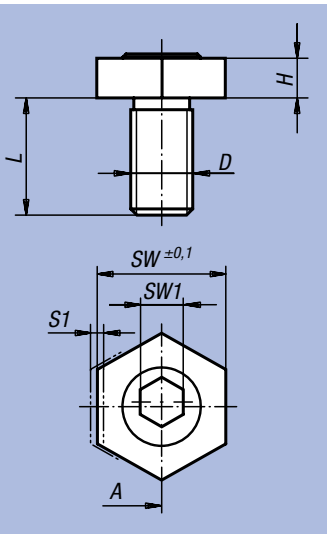

Order No.	A	D	H	L	SW	SW1	S1 (Clamping travel)	Clamping force kN	Tightening torque max. Nm	kg
04435-04	3,8	M4	2,8	9,5	7,93	3	0,8	0,9	2,2	0,003
04435-06	7,8	M6	4,8	11	15,86	4	1,3	3,4	8,5	0,011
04435-08	10,2	M8	4,8	15	20,61	5	1	3,4	11,3	0,018
04435-10	10,2	M10	6,4	19	20,61	7	1,4	8,9	28,06	0,027
04435-12	12,7	M12	9,5	23	25,38	8	2	17,8	88	0,053
04435-16	15	M16	12,7	27	30,13	12	2,5	27,7	135	0,103

Low-profile T-slot Cam Clamps



Material:
Tempered steel, brass hexagonal nut
Surface finish:
Heat-treated class 10.9, black oxide finish
Sample order:
nlm 04436-12
Note:
The Low-profile T-slot Cam Clamps can be used directly on machine tables or tables with T-slots. The through threaded rod is used to fix the element in the T-slot. In order to avoid the formation of marks at the bottom of the T-slot, we recommend using fine support elements.
On request:
Spare eccentric screws.

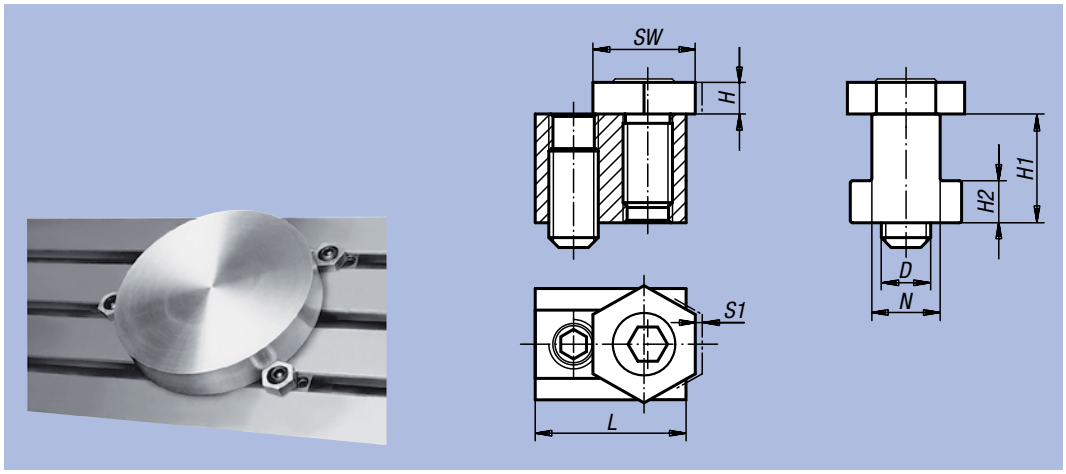

Order No.	D	N	H	H1	H2	L	SW	S1 (Clamping travel)	Clamping force kN	kg
04436-08	M6	8	4,8	9,6	3,3	23	16	1,3	3,4	0,025
04436-10	M6	10	4,8	14	4,5	23	16	1,3	3,4	0,035
04436-12	M8	12	4,8	15,5	6,5	28	21	1	3,6	0,058
04436-14	M10	14	6,4	22	8,5	30,5	21	1,6	9	0,090
04436-16	M12	16	9,5	22,5	9	30,5	25	2	18	0,125
04436-18	M12	18	9,5	28,5	10	34,5	25	2	18	0,192
04436-20	M16	20	12,7	32	12	39	30	2,5	27	0,290
04436-22	M16	22	12,7	38,2	14	44	30	2,5	27	0,395

Edge Clamps with support



Material:
Steel
Surface finish:
Body heat-treated and black oxide finish, clamping disc case hardened and brass-coated
Sample order:
nlm 04437-16
Note:
The Edge Clamps with support can be used directly on machine tables or on adapter plates. In addition to clamping, they offer a powerful downward pressure.
On request:
Spare eccentric screws.

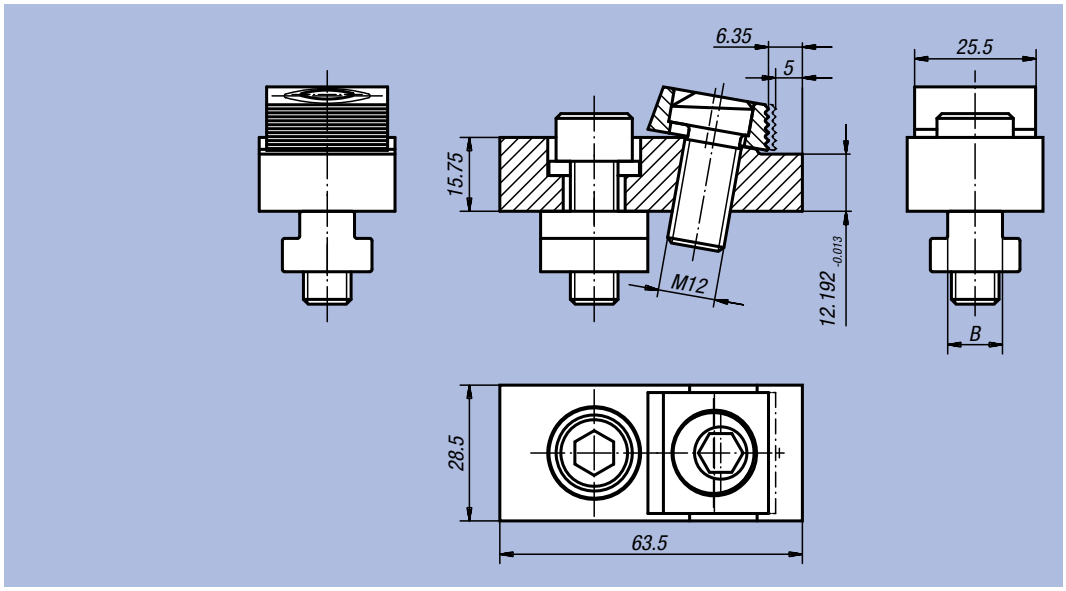

Order No.	Slot width B	Clamping force kN	kg
04437-12	12	12	0,284
04437-14	14	12	0,320
04437-16	16	12	0,334
04437-18	18	12	0,370

Application using Cam Clamps

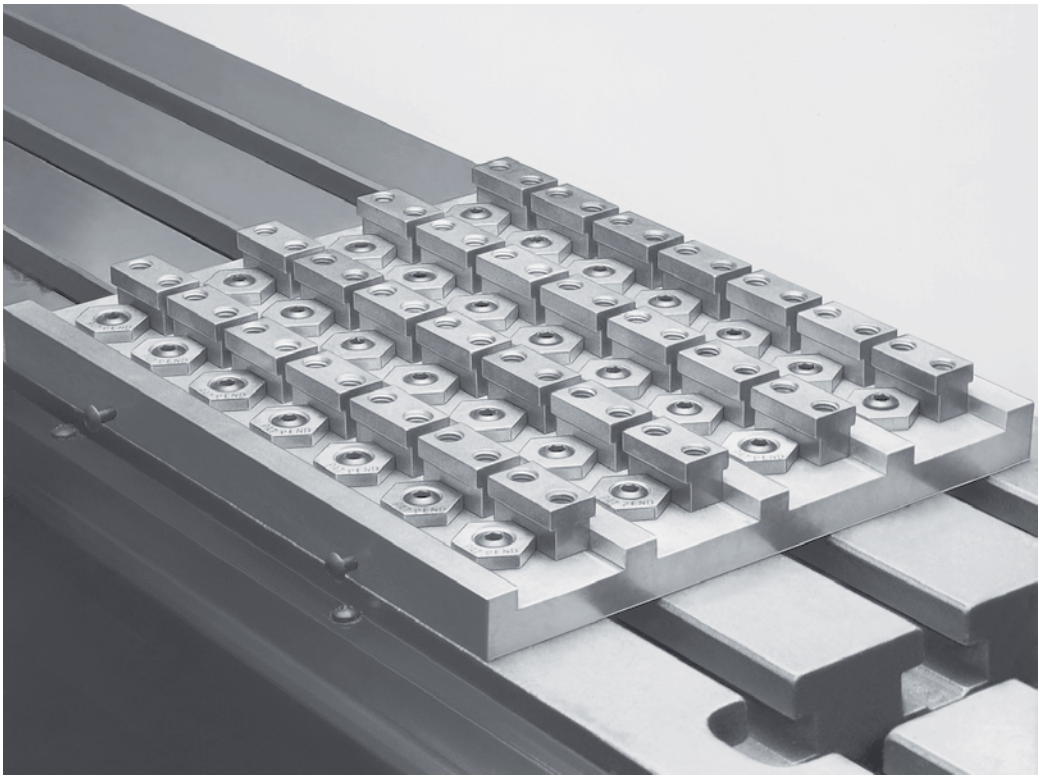

Application using Edge Clamps with Support

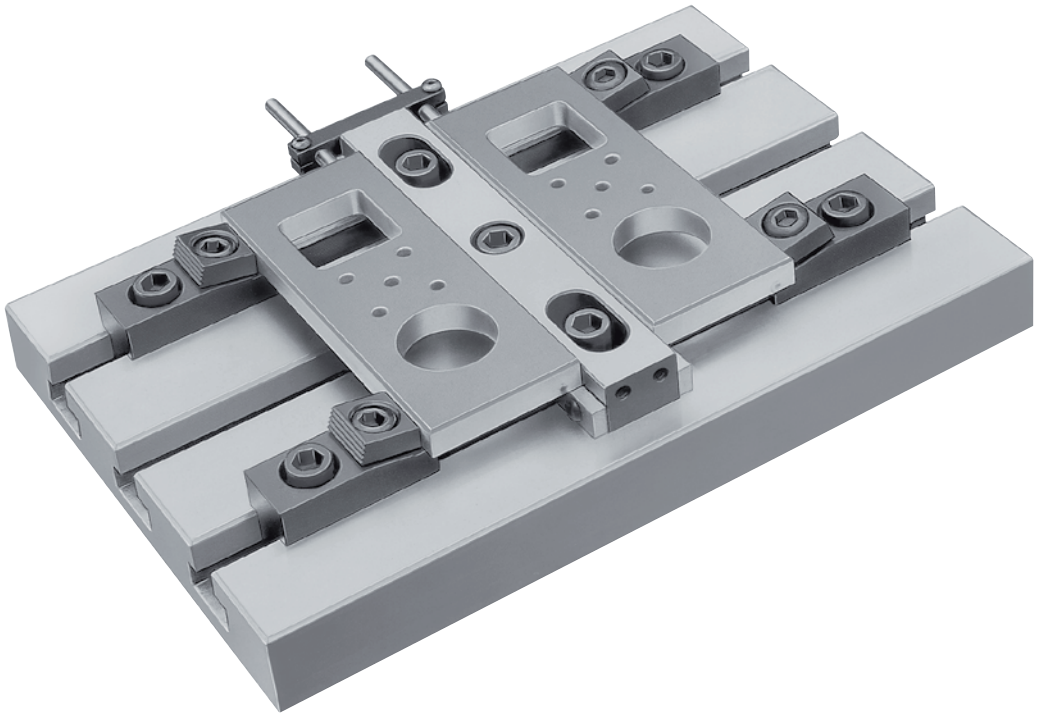

Edge Clamps



Material:
Steel

Surface finish:
Body heat-treated and black oxide finish, clamping disc case hardened and brass-coated

Sample order:
nlm 04439-14

Note:
The Edge Clamps can be used directly on machine tables or on adapter plates. The downward pressure keeps the workpiece immobile on the support. The clamping disc adapts to the angular position of the piece, i.e. the workpiece does not have to be orthogonal. The clamping disc has a smooth surface for machined pieces and a notched surface for rough pieces.

On request:
Spare eccentric screws.

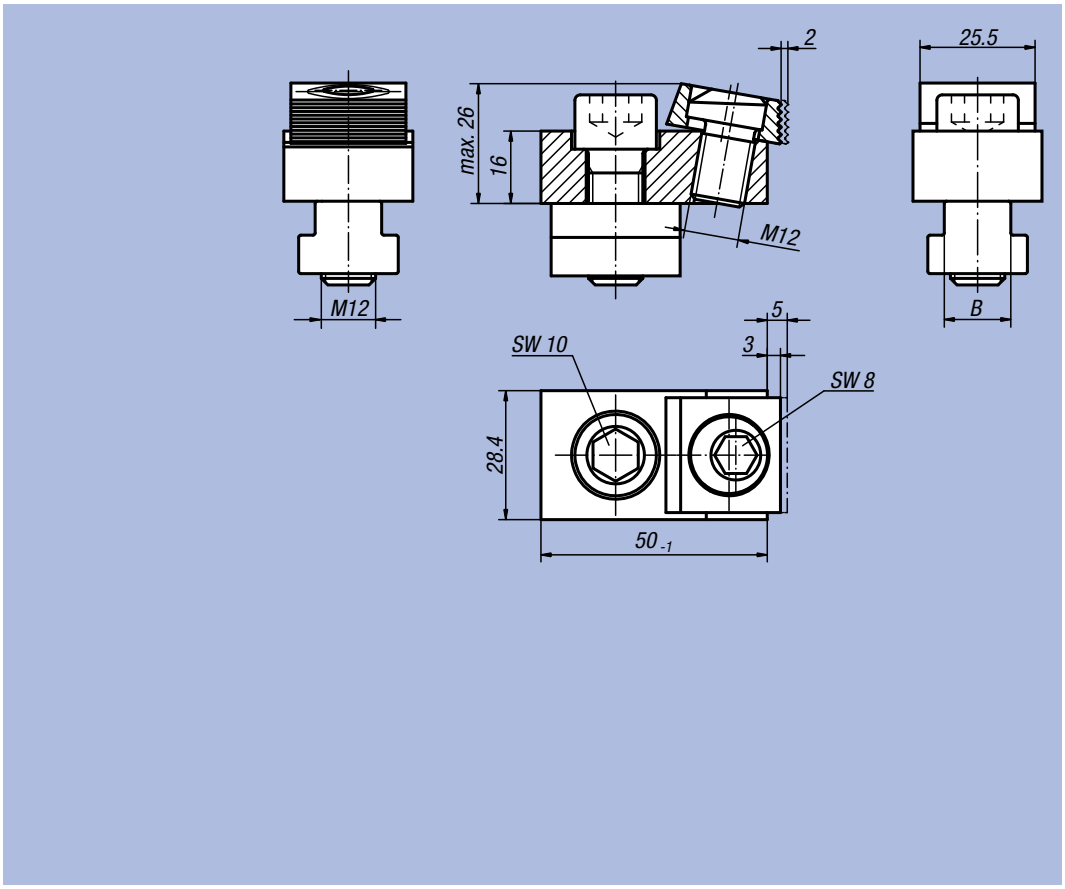

Order No.	Slot width B	Clamping force kN	kg
04439-00	without T-nut and fastening screw	18	0,180
04439-14	14	18	0,270
04439-16	16	18	0,279
04439-18	18	18	0,316

Talon grip



Material:
Steel

Surface finish:
Hardened (52 +2 HRC) and black oxide finish

Sample order:
nlm 04440-1219

Note:
The clamping claws are provided for installation in the clamping jaws of work-holders. A nut with a threaded hole is sufficient for the installation. The sharp edges of the clamping claws press into the workpiece and prevent lateral and horizontal movement.

- Form-fit clamping allows high cutting speeds.
- Low clamping height of 1.5 mm (saves material costs).
- The contour of the claws produces a slight pull-down spring return.

A matching stop is available as an accessory.

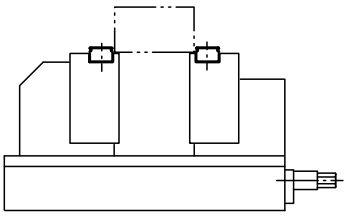

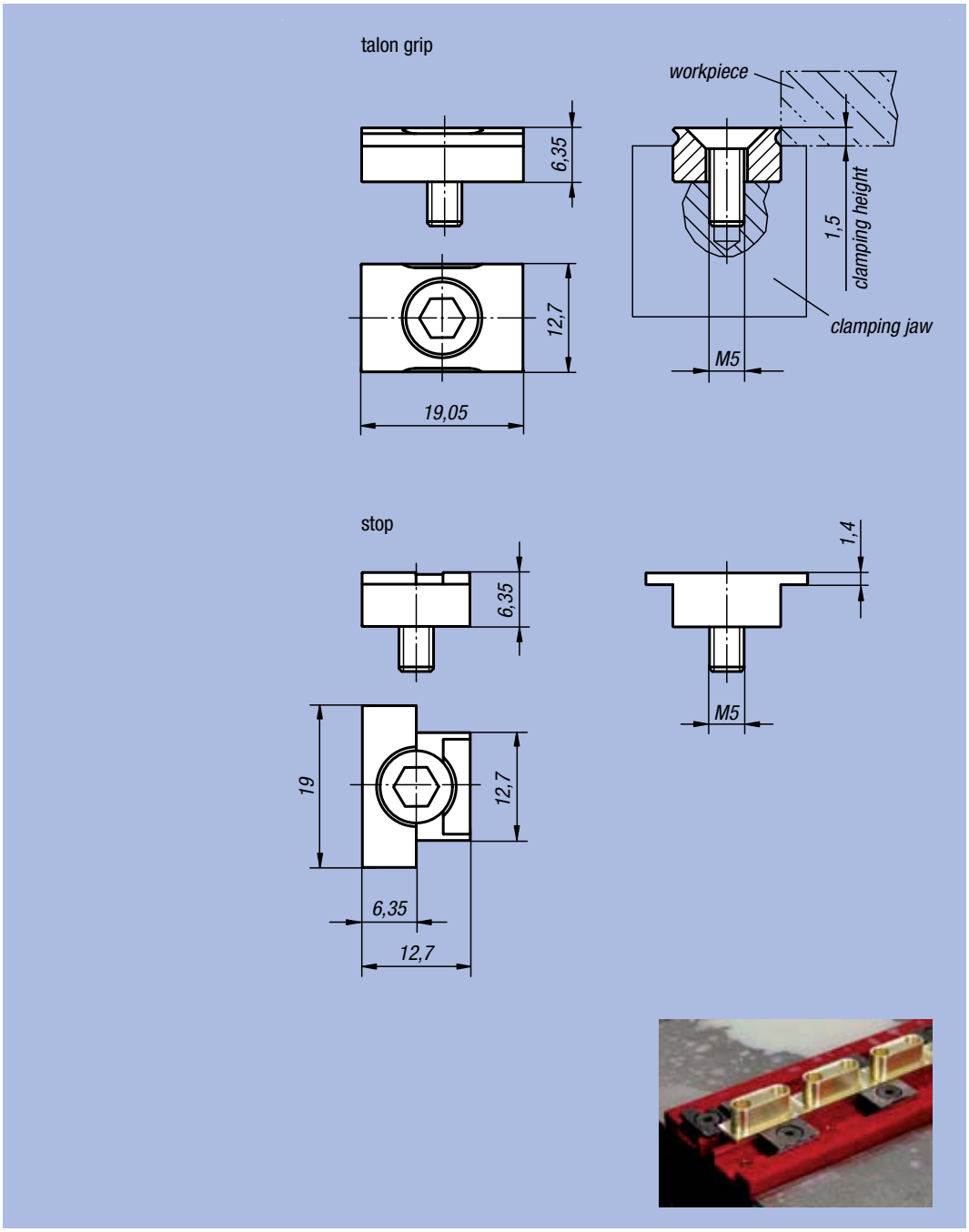

Order No.	Surface finish	g
04440-1219	talon grip	10
04440-12	stop	6

Round talon grip



Material:
Steel

Surface finish:
Hardened (52 +2 HRC) and black oxide finish

Sample order:
nlm 04440-0919

Note:
The clamping claws are provided for installation in the clamping jaws of work-holders. A counterbore with a threaded hole is sufficient for the installation. The sharp edges of the clamping claws press into the workpiece and prevent lateral and horizontal movement.

- Form-fit clamping allows high cutting speeds.
- Low clamping height of 1.5 mm (saves materal costs).
- The contour of the claws produces a slight pull-down spring return.

With the clamping claws you increase the applications of your machine work-holder. Round, contoured and oversized workpieces can be quickly and securely clamped by using the clamping claws.

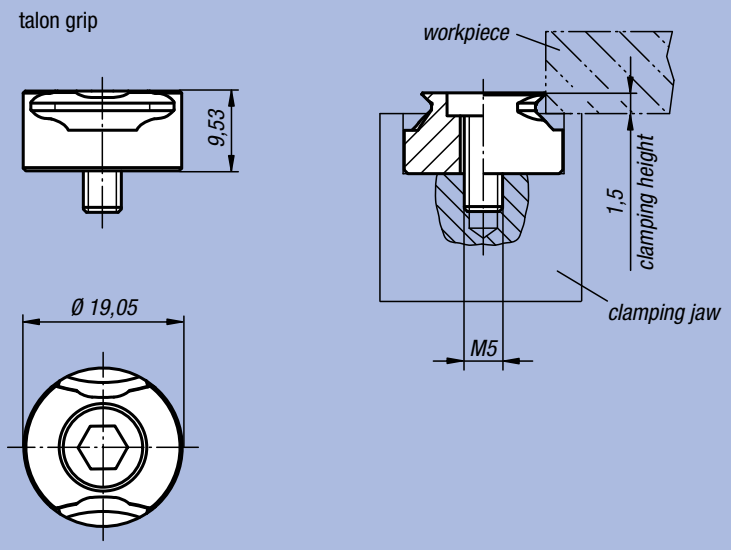

Sonderbauformen



round components



Order No.	Surface finish	g
04440-0919	talon grip	17

Clamps



Material:
Clamp disc in steel or brass
Surface finish:
Hardened steel
Sample order:
nlm 04441-113
Note:
Extremely space-saving design. No interfering edges thanks to lateral tension.
Side clamping effect (downward pressure).

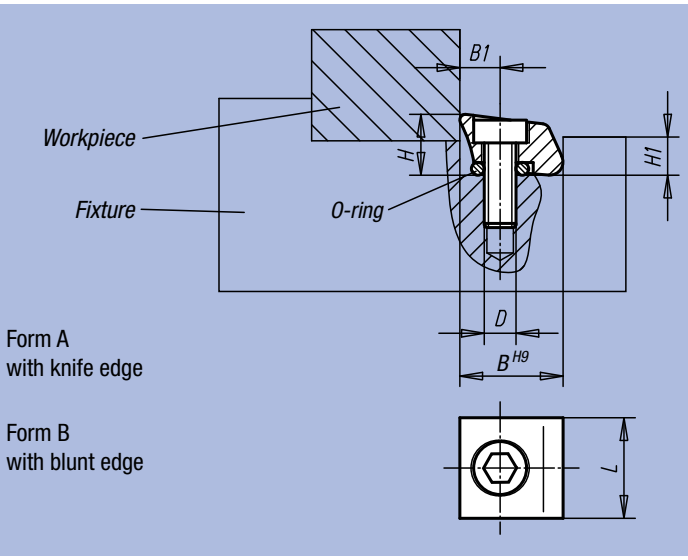

Order No.	Form	Material	D	B	B1	H	H1	L	Clamping width	Clamping travel	Clamping force kN	Tightening torque max. Nm	g
04441-110	A	steel	M2,5x8	9,5	3,8	6	3,6	9,5	9,5	0,15	2,8	1,8	4
04441-113	A	steel	M4x12	12,7	5,1	8	4,8	13	12,7	0,4	6,6	5,6	7
04441-119	A	steel	M6x16	19,05	7,6	11,5	7,2	19	19,1	0,6	16	22,5	15
04441-210	B	steel	M2,5x8	9,5	3,8	6	3,6	9,5	9,5	0,15	2,8	1,8	4
04441-213	B	steel	M4x12	12,7	5,1	8	4,8	13	12,7	0,4	6,6	5,6	7
04441-219	B	steel	M6x16	19,05	7,6	11,5	7,2	19	19,1	0,6	16	22,5	22
04441-310	B	brass	M2,5x8	9,5	3,8	6	3,6	9,5	9,5	0,15	0,9	0,56	6
04441-313	B	brass	M4x12	12,7	5,1	8	4,8	13	12,7	0,4	1,8	2,8	8
04441-319	B	brass	M6x16	19,05	7,6	11,5	7,2	19	19,1	0,6	4,2	5,6	25

Adjustable Eccentric Type Edge Clamps



Material:
Steel

Surface finish:
Body heat-treated, black oxide finish, ground support surface; clamping disc case hardened and brass-coated

Sample order:
nlm 04444-12

Note:
Two stops used with one or two Adjustable Eccentric Type Edge Clamps can be used to make up a tailored cost-effective clamping system.

On request:
Spare eccentric screws.

04444-08 and 04444-12

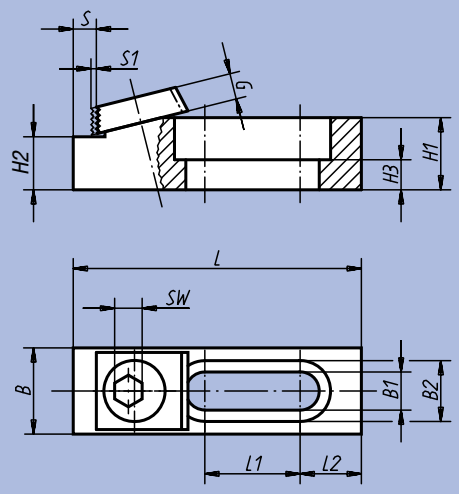

04444-16

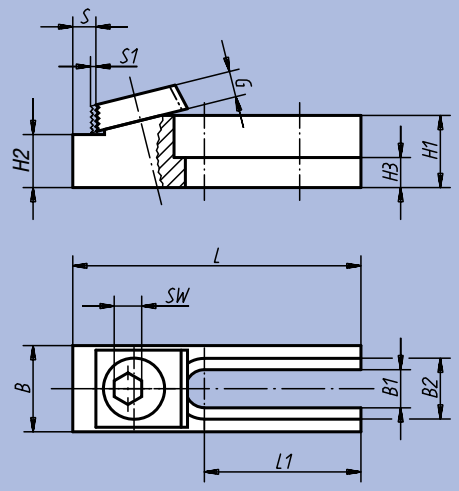

Order No.	suitable fastening screw	L	L1	L2	B	B1	B2	H1	H2	H3	S	S1	G	SW	Oblong hole	Clamping force kN	Tightening torque max. Nm	kg
04444-08	M8	63,5	21	13,5	19	8,4	13,4	15,9	11,684 -0,013	6,6	6,3	1,2	5,3	7	closed	8,9	28	0,120
04444-12	M12	95,1	42,7	12,7	28,5	13	19,8	15,9	12,192 -0,013	6,9	7,1	2	9,5	8	closed	17,8	88	0,260
04444-16	M16	107	46,3	-	38	17	24,8	41	35,001 ±0,006	21	8,3	2,5	12,7	12	open	26,7	135	1,000

Adjustable Stops



Material:
Steel

Surface finish:
Heat-treated, black oxide finish; ground support surfaces and stops

Sample order:
nlm 04445-12

Note:
Two stops used with one or two Adjustable Eccentric Type Edge Clamps can be used to make up a tailored cost-effective clamping system.

04445-08 and 04445-12

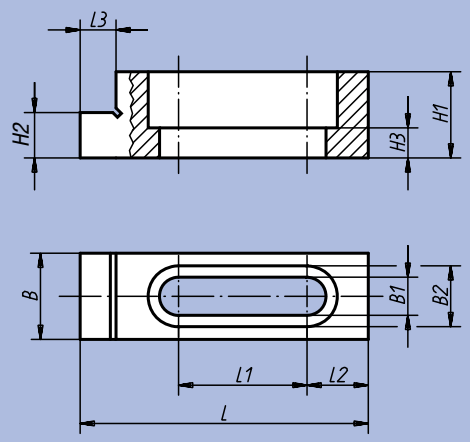

04445-16

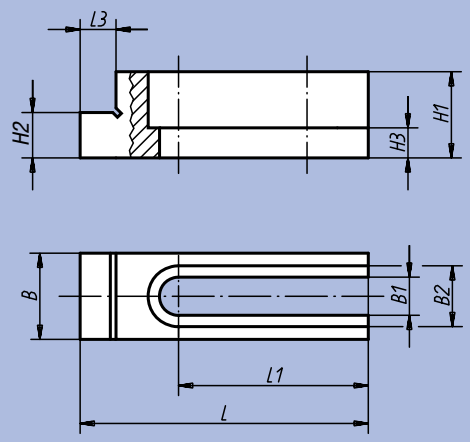

Order No.	suitable fastening screw	L	L1	L2	L3	B	B1	B2	H1	H2	H3	Oblong hole	kg
04445-08	M8	63,5	28,3	13,5	7,9	19	8,4	13,4	19	11,684 -0,013	6,6	closed	0,090
04445-12	M12	95,2	42,7	12,7	7,9	28,5	13,4	19,8	22	12,192 -0,013	6,9	closed	0,280
04445-16	M16	107	46,2	-	9,5	38	17	24,8	50,7	35,001 ±0,006	21,3	open	1,000

Edge Clamps

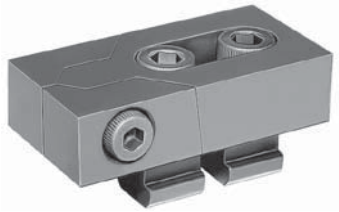

Material:
Steel
Surface finish:
Hardened and black oxid finish
Sample order:
nlm 04450-16
Note:
Due to their flat construction, these handy edge clamps are suitable for machining the majority of part dimensions that occur. These hardened jaws clamp forward and downward simultaneously due to the wedging effect.

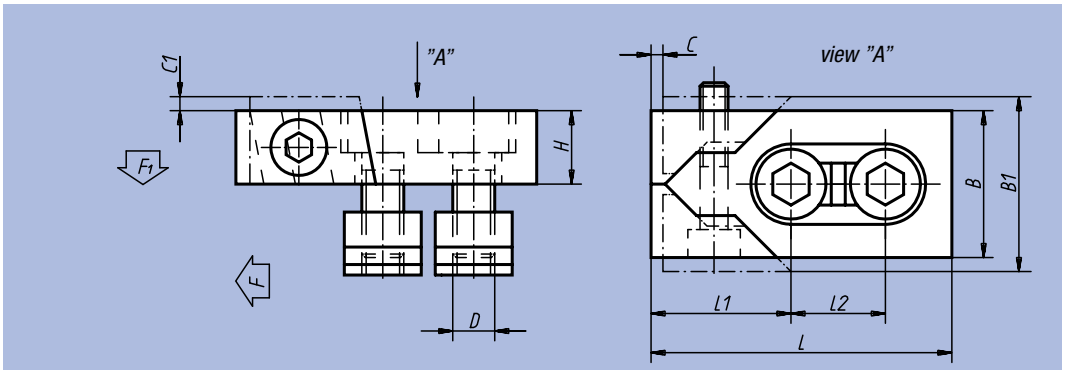

Order No.	Slot width	L	L1	L2	B	B1	H	C	C1	D	F kN	F1 kN	Tightening torque max. Nm	kg
04450-12	12	80	39	26	40	47	20	3	2,5	M10	16	0,6	15	1,150
04450-14	14	80	39	26	40	47	20	3	2,5	M12	22	0,9	18	1,250
04450-16	16	80	39	26	40	47	20	3	3	M12	22	0,9	18	1,330
04450-161	16	100	46	34	50	59	25	4	2,5	M14	32	1,2	25	2,340
04450-18	18	100	46	34	50	60	25	4	3	M16	36	1,4	35	2,540
04450-20	20	100	46	34	50	60	25	4	3	M16	36	1,4	35	2,660
04450-22	22	140	65	50	78	95	30	5	4	M20	36	1,4	45	5,980

Pressing Clamps



Material:
Steel
Surface finish:
Hardened and black oxid finish
Sample order:
nlm 04470-12
Note:
Particularly low parts to be machined can be clamped using these flat clamps. The part to be machined is pressed firmly and securely into the machine-tool table by the wedging effect of the jaws.
"H1" and "X" at the maximum T-slot depth specified by DIN 650.
The spanner can be ground down by the dimension X to achieve lower clamping levels.

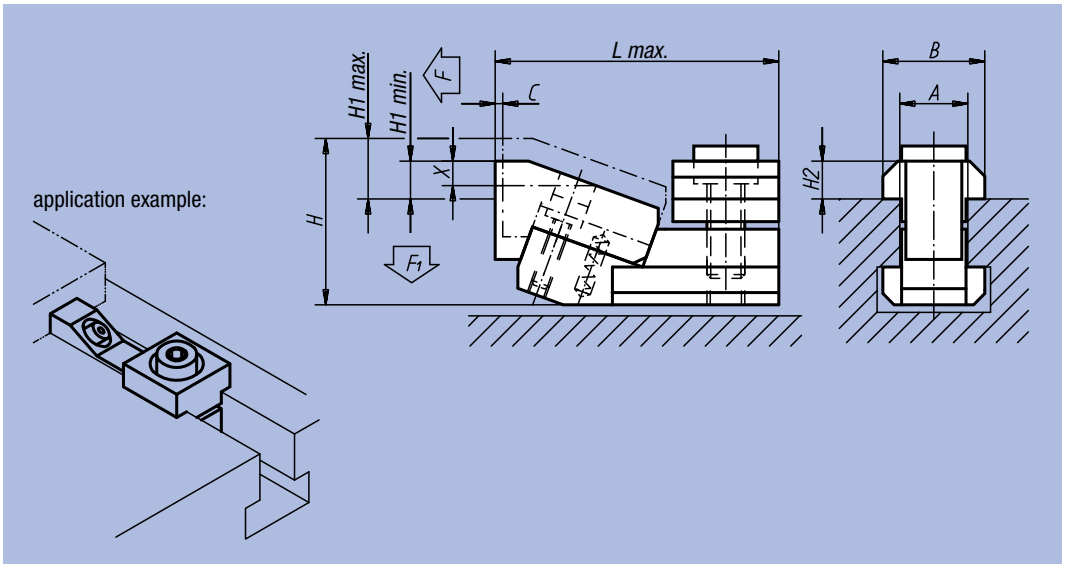

Order No.	A	C	L max.	B	H	H1 min.	H1 max.	X	H2	F (N)	F1 (N)	kg
04470-12	12	1,8	52	18	31	3,5	8,5	5	7	5000	600	0,300
04470-14	14	1,8	55	22	34	2,5	7,5	5	8	5500	700	0,380
04470-16	16	2,5	68	25	41	4	11	6	9	8000	900	0,700
04470-18	18	2,5	71	28	43	2	9	6	10	9000	1000	0,830
04470-22	22	3	89	35	53	5	14	9	14	16000	1900	1,740

Narrow Edge Clamps



Material:
Base body in steel; clamping jaw in hardened steel; centring bush with collar in tempered steel

Surface finish:
Black oxide finish; clamping jaw case-hardened

Sample order:
nlm 04480-006

Note:
Due to their flat construction, these handy narrow edge clamps are suitable for machining low parts. These hardened jaws clamp forward and downward simultaneously due to the wedging effect.

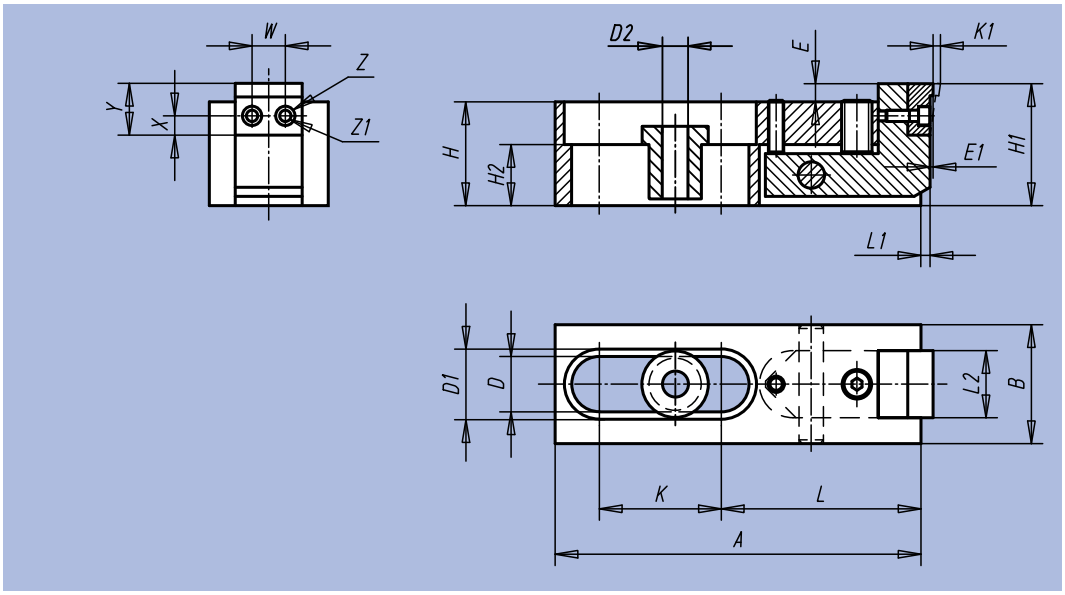

Order No.	A	B	D	D1	D2	E	E1	H	H1	H2	K	K1	L	L1	L2	W	X	Y	Z	Z1	Clamping force kN	kg
04480-006	80	24	12,2	16	6,5	2,5	0,6	21	25,5	9	25,5	2	44,5	2,5	13,5	7	4,5	11	5	3	3	0,230
04480-010	120	39	18,2	24	10,5	4	1	34	40	20	40,5	2,5	65,5	4	21,5	10	6	15	8	4,5	16	0,950
04480-016	186	60	26,2	35	17	7	1,5	51	59	22	60,5	4	105	6,5	35,5	16	9	24	14	9	31	3,250

Notes:

Side Clamps

with thrust bolts



Material, surface finish:
Housing in tempered steel, heat-treated and black oxide finish; arm in tempered steel, black oxide finish; jaw in hardened tool steel, heat-treated and black oxide finish

Sample order:
nlm 04485-02508

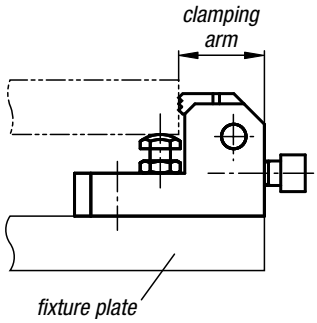

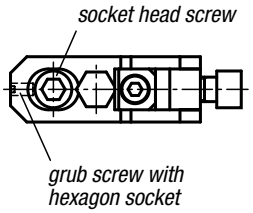

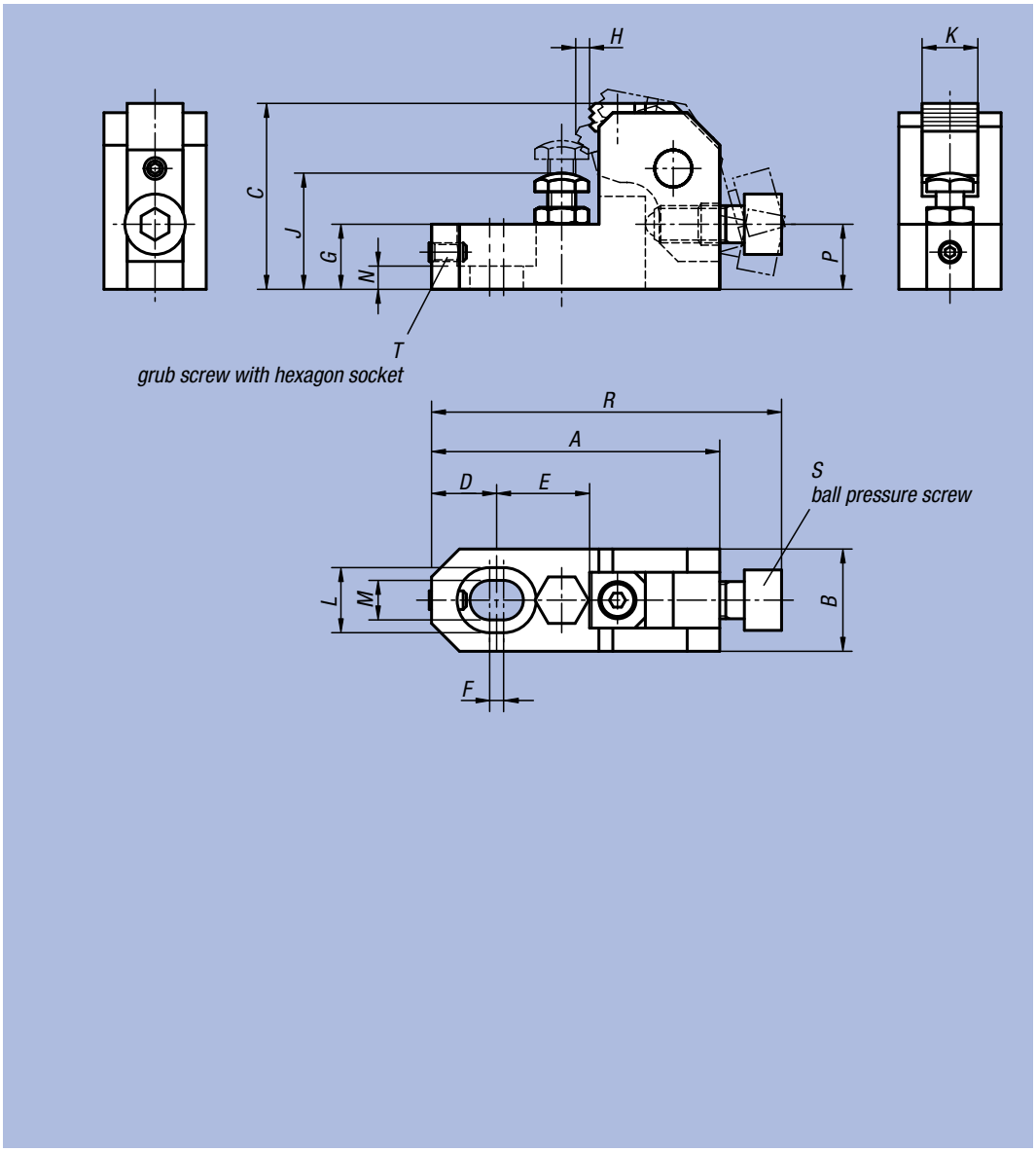

Order No.	A	B	C	D	E	F	G	H	J	K	L	M	N	P	R	S	T	Clamping force N	Tightening torque Nm	kg
04485-02508	62	22	40	14	20	3	14	3	25-32	12	14	8,5	5	14	75,5	M8x20	M4x8	6000	15	0,230
04485-03210	78	25	50	18	25	4	18	3,7	32-40	16	17,5	11	7	17,5	95	M10x25	M5x10	10000	30	0,410
04485-04012	93	32	60	21	30	5	21	4,5	40-48	20	20	13	8	21	113	M12x30	M6x12	17000	65	0,750
04485-04816	124	38	80	28	40	6	27	6	48-63	25	26	17	10	28	151	M16x40	M8x16	25000	130	1,570

Reversible Jaw Edge Clamps



Material:
Malleable, cast iron body;
jaw in case-hardened steel

Surface finish:
Black oxide finish,
clamping jaw case-hardened

Sample order:
nlm 04500-26

Note:
The jaws are rotatable: smooth side for machined parts, rippled side for rough clamping surfaces. We recommend that two clamping screws be used to clamp the stable jaw on the table of the machine tool!
Bolts for T-slots 07040 (order separately) can be used as fixing bolts dependent on the width of the slot.

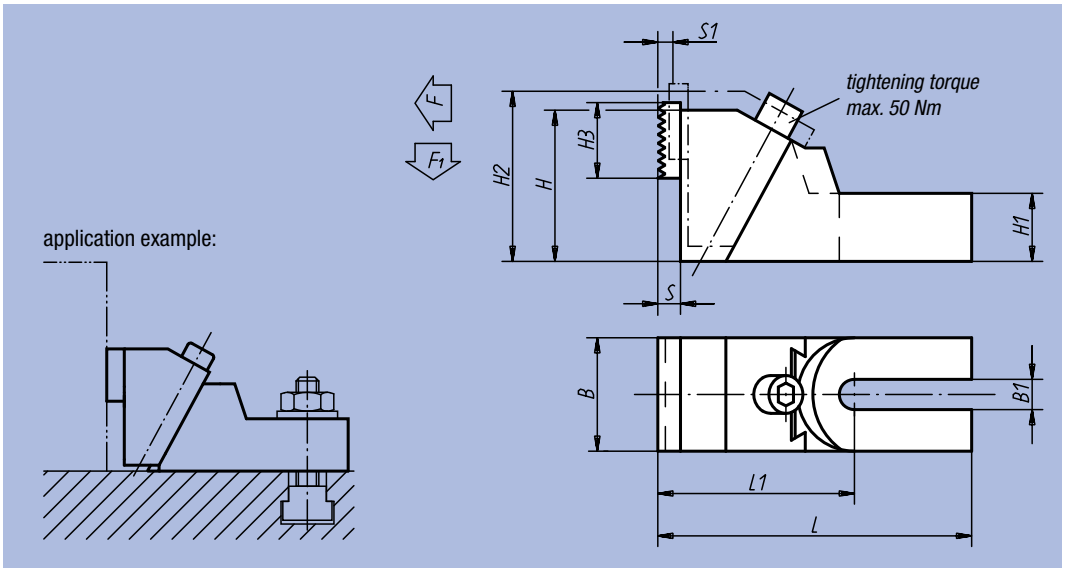

Order No.	suitable for slot width	L	L1	B	B1	H	H1	H2	H3	S	S1	F kN	F1 kN	kg
04500-19	12, 14, 16, 18	177,5	112,5	65	19	85	37	99	40	12	8	18,8	2,26	4,400
04500-26	20, 22, 24, 28, 30	226,5	136,5	75	26	100	45	118	40	12	11	23,05	2,77	6,800
04500-38	32, 36, 42	262,5	157,5	90	38	120	55	145	40	12	15	29,4	3,33	11,300

Narrow Edge Clamps



Material:
Base body in steel; clamping jaw in hardened steel; centring bush with collar in tempered steel

Surface finish:
Black oxide finish;
clamping jaw case-hardened

Sample order:
nlm 04509-006

Note:
Because of their low design, Narrow Edge Clamps are perfect for machining pieces with small heights. The hardened steel jaws exert forward and downward pressure on the work-piece at the same time.

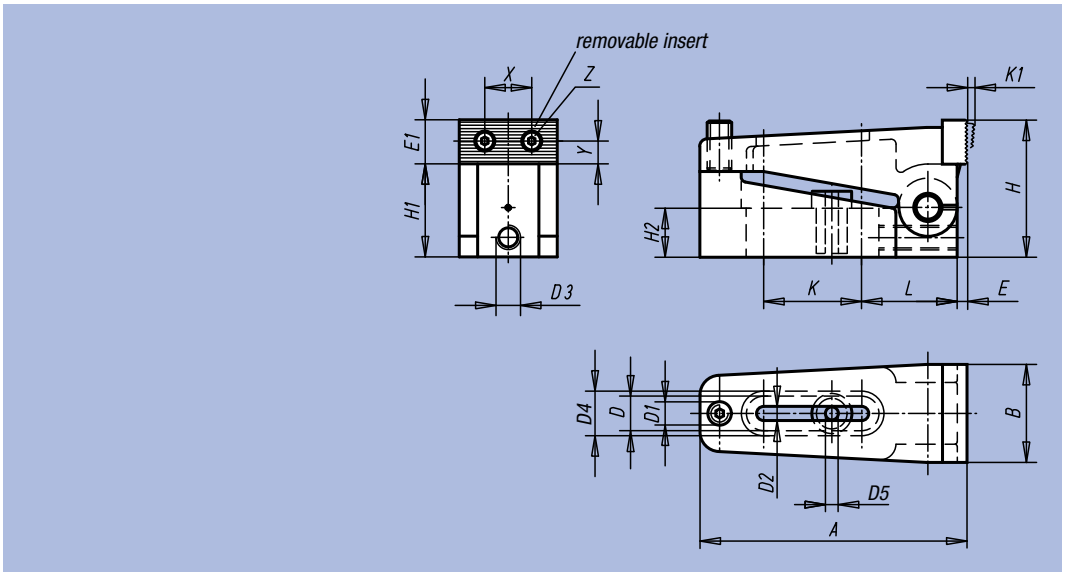

Order No.	A	B	D	D1	D2	D3	D4	D5	E	E1	H	H1	H2	K	K1	L	X	Y	Z	Clamping force kN	kg
04509-006	73	25	12,2	M6	7	M6	16	6,5	2,5	11	35	24	12,4	25,5	2,5	27	12	4,5	M3	10	0,240
04509-010	110	39	18,2	M10	11	M10	24	10,5	4	18	56	38	20	40,5	4	39	20,5	8	M5	40	0,970
04509-016	170	58	26,2	M16	17	M10	35	17	7	27	85	60	30	60,5	7	61	32	13	M8	100	3,800

Adjustable Supports



Material:
Tempered steel
Surface finish:
tempered and black oxide finish;
bearing surfaces ground
Sample order:
nlm 04512-12125
Note:
The threaded hole is used to affix jig components.
Adjustable by using the supports, can be set in any position. The narrow edge clamp 04520 can also be placed in the desired position transversely to the T-slot.

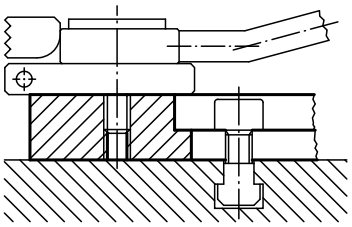

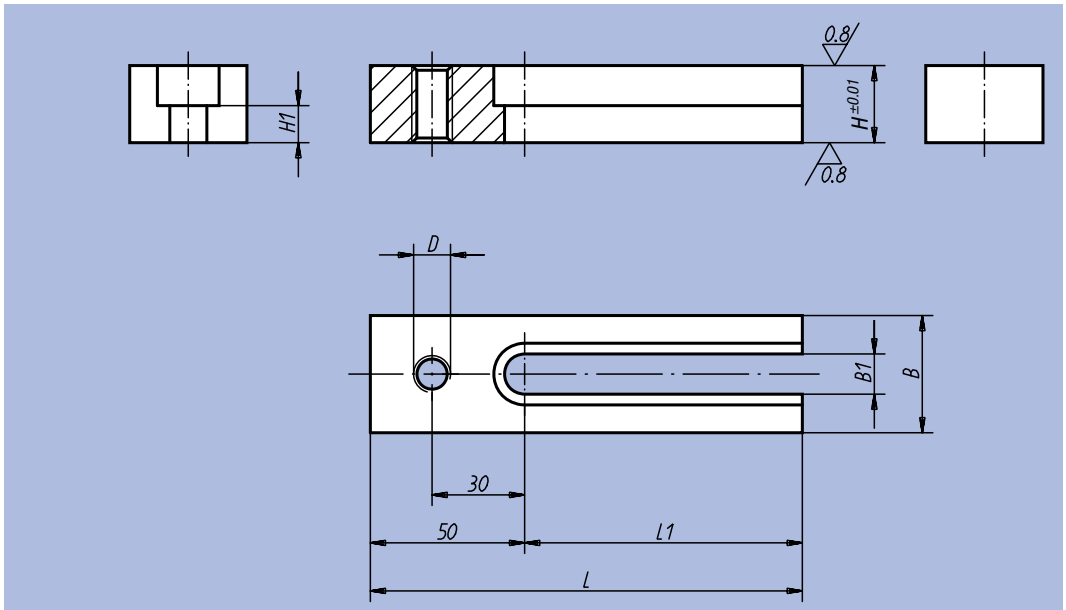

Order No.	D	L	L1	B	B1	H	H1	kg
04512-12025	M12	90	40	38	13	25	12	0,492
04512-12032	M12	90	40	38	13	32	19	0,645
04512-12040	M12	90	40	38	13	40	27	0,813
04512-12050	M12	90	40	38	13	50	37	1,027
04512-12125	M12	140	90	38	13	25	12	0,700
04512-12132	M12	140	90	38	13	32	19	0,924
04512-12140	M12	140	90	38	13	40	27	1,175
04512-12150	M12	140	90	38	13	50	37	1,487
04512-16032	M16	90	40	50	17	32	15	0,800
04512-16040	M16	90	40	50	17	40	23	1,014
04512-16050	M16	90	40	50	17	50	33	1,300
04512-16132	M16	140	90	50	17	32	15	1,153
04512-16140	M16	140	90	50	17	40	23	1,480
04512-16150	M16	140	90	50	17	50	33	1,880

Cam-operated Edge Clamps adjustable



Material:
Steel
Surface finish:
Case-hardened with black oxide finish
Sample order:
nlm 04516-006010
Note:
Cam Type Edge Clamps are used for rapid clamping, to fasten the work-piece by means of a cam lever effect. The Cam Type Edge Clamp is positioned and fixed with the centring bush and stop screw (see drawing). The stop screw is used to stop the clamp from moving back after the adjustment, by transferring the clamping force directly to the centring bush.

The types 04516-006010, 04516-006015, 04516-006030 and 04516-006035 has 2 round carbide serrations.

Clamping force:
04516-006... = 3800 N
04516-010... = 7200 N

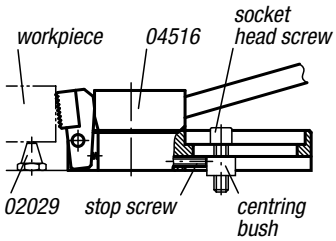

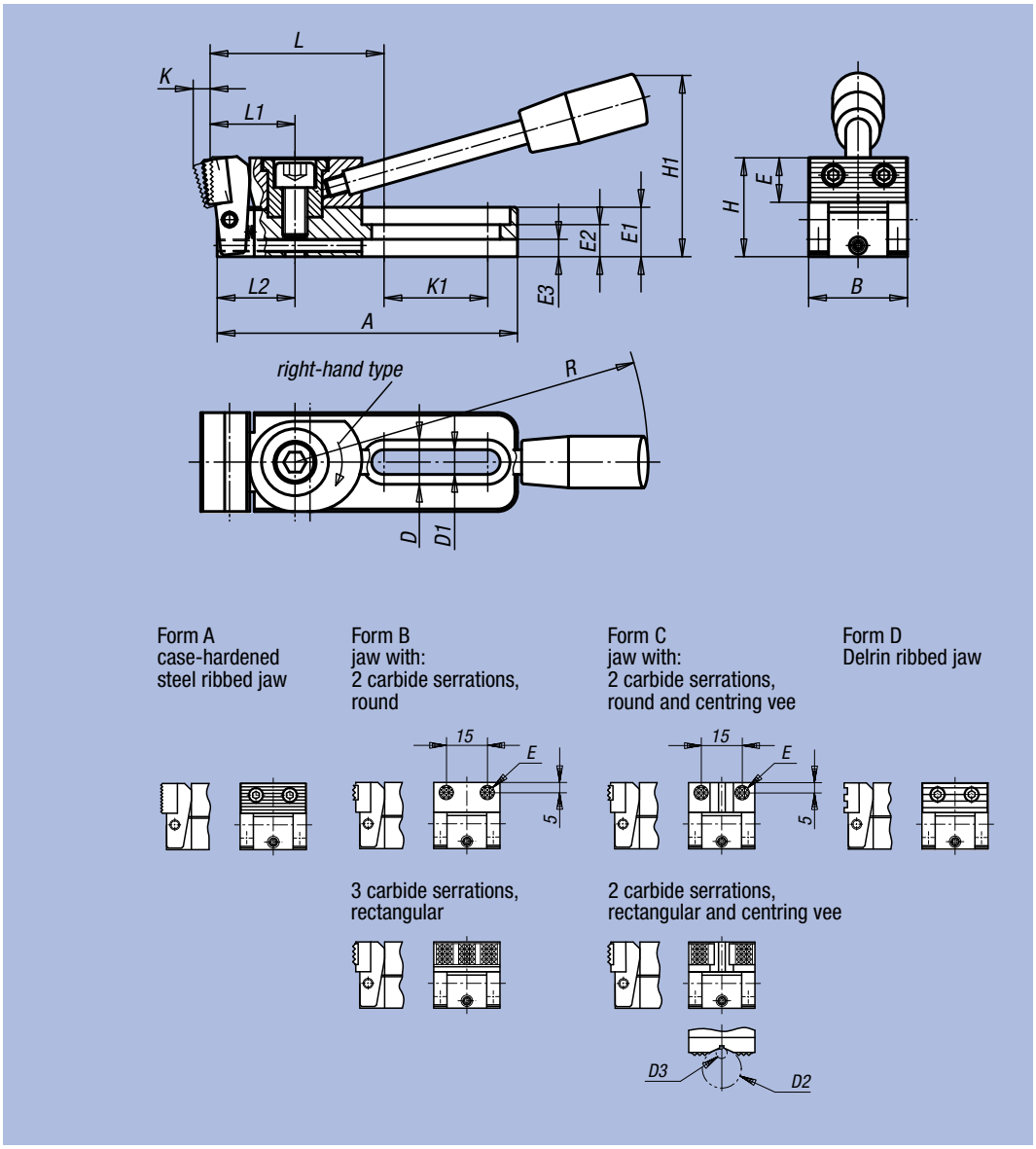

Order No.	Form	Surface finish	A	B	D	D1	D2 max.	D3 min.	E	E1	E2	E3	H	H1	K	K1	L	L1	L2	R	Clamping force kN	kg
04516-006005	A	right-hand type	78	25	12	6,2	-	-	11	12	8	4	25	45	4	26	46,5	22	20	110	3,8	0,230
04516-010005	A	right-hand type	121,5	40	18	10,2	-	-	18	20	13	7	40	74	6	42	71	35	31,5	143	7,2	0,900
04516-006025	A	left-hand type	78	25	12	6,2	-	-	11	12	8	4	25	45	4	26	46,5	22	20	110	3,8	0,230
04516-010025	A	left-hand type	121,5	40	18	10,2	-	-	18	20	13	7	40	74	6	42	71	35	31,5	143	7,2	0,900
04516-006010	B	right-hand type	78	25	12	6,2	-	-	ø 8	12	8	4	24	45	3,5	26	46,5	22	20	110	3,8	0,230
04516-010010	B	right-hand type	121,5	40	18	10,2	-	-	12,7	20	13	7	39	74	5,5	42	73	35	31,5	143	7,2	0,900
04516-006030	B	left-hand type	78	25	12	6,2	-	-	ø 8	12	8	4	24	45	3,5	26	46,5	22	20	110	3,8	0,230
04516-010030	B	left-hand type	121,5	40	18	10,2	-	-	12,7	20	13	7	39	74	5,5	42	73	35	31,5	143	7,2	0,900
04516-006015	C	right-hand type	78	25	12	6,2	9,5	2,5	ø 8	12	8	4	24	45	3,5	26	46,5	22	20	110	3,8	0,230
04516-010015	C	right-hand type	121,5	40	18	10,2	27	4,5	12,7	20	13	7	39	74	5,5	42	73	35	31,5	143	7,2	0,900
04516-006035	C	left-hand type	78	25	12	6,2	9,5	2,5	ø 8	12	8	4	24	45	3,5	26	46,5	22	20	110	3,8	0,230
04516-010035	C	left-hand type	121,5	40	18	10,2	27	4,5	12,7	20	13	7	39	74	5,5	42	73	35	31,5	143	7,2	0,900
04516-006020	D	right-hand type	78	25	12	6,2	-	-	11	12	8	4	25	45	4,5	26	46,5	22	20	110	3,8	0,230
04516-010020	D	right-hand type	121,5	40	18	10,2	-	-	18	20	13	7	40	74	7	42	70,5	35	31,5	143	7,2	0,900
04516-006040	D	left-hand type	78	25	12	6,2	-	-	11	12	8	4	25	45	4,5	26	46,5	22	20	110	3,8	0,230
04516-010040	D	left-hand type	121,5	40	18	10,2	-	-	18	20	13	7	40	74	7	42	70,5	35	31,5	143	7,2	0,900

Cam-operated Edge Clamps



Material:
Steel

Surface finish:
Case-hardened with black oxide finish

Sample order:
nlm 04518-006005

Note:
Cam Type Edge Clamps are used for rapid clamping, to fasten the work-piece by means of a cam lever effect. The Cam Type Edge Clamp is positioned and fixed with the centring bush (see drawing).

The types 04518-006010, 04518-006015, 04518-006030 and 04518-006035 has 2 round carbide serrations.

Clamping force:
04518-006... = 3800 N
04518-010... = 7200 N

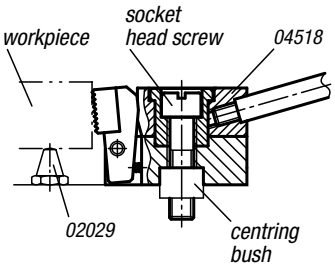

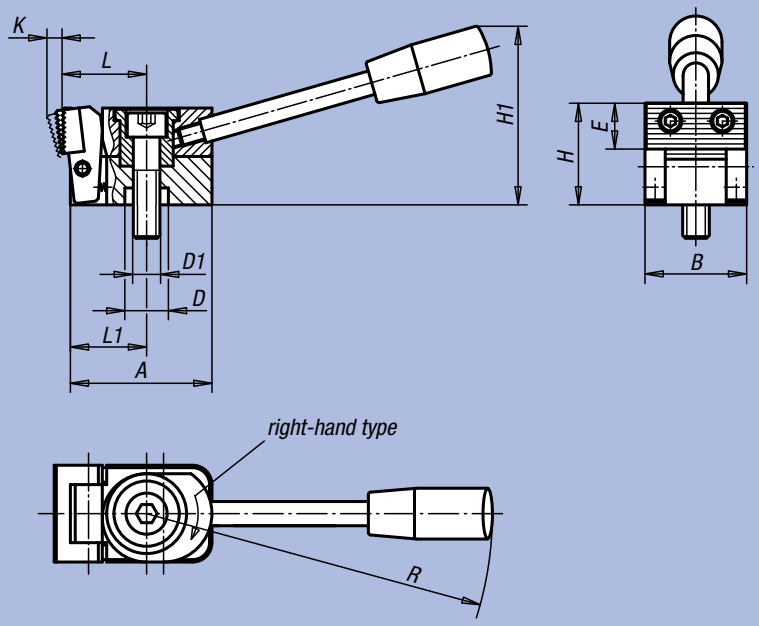

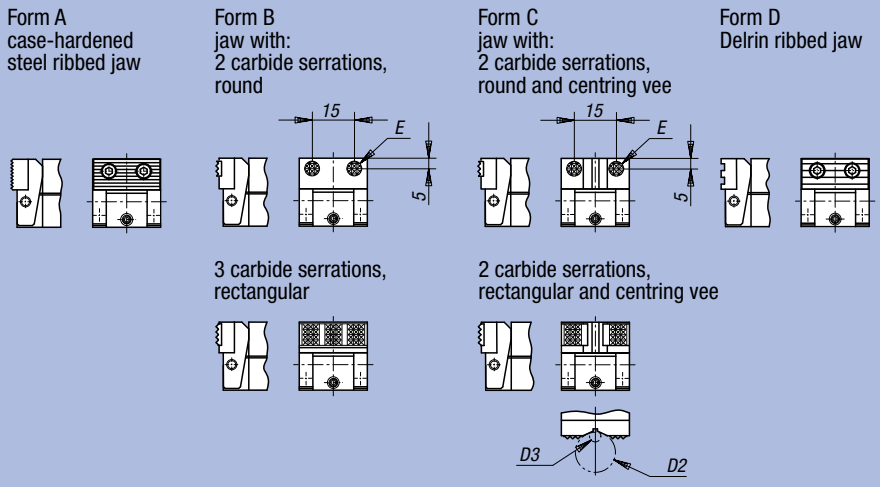

Order No.	Form	Surface finish	A	B	D	D1	D2 max.	D3 min.	E	H	H1	K	L	L1	R	Clamping force kN	kg
04518-006005	A	right-hand type	38,5	25	12	M6	-	-	11	25	45	4	22	20	110	3,8	0,175
04518-010005	A	right-hand type	58,5	40	18	M10	-	-	18	40	74	6	35	31,5	143	7,2	0,650
04518-006025	A	left-hand type	38,5	25	12	M6	-	-	11	25	45	4	22	20	110	3,8	0,175
04518-010025	A	left-hand type	58,5	40	18	M10	-	-	18	40	74	6	35	31,5	143	7,2	0,650
04518-006010	B	right-hand type	38,5	25	12	M6	-	-	ø 8	24	45	3,5	22	20	110	3,8	0,175
04518-010010	B	right-hand type	58,5	40	18	M10	-	-	12,7	39	74	5,5	37	31,5	143	7,2	0,650
04518-006030	B	left-hand type	38,5	25	12	M6	-	-	ø 8	24	45	3,5	22	20	110	3,8	0,175
04518-010030	B	left-hand type	58,5	40	18	M10	-	-	12,7	39	74	5,5	37	31,5	143	7,2	0,650
04518-006015	C	right-hand type	38,5	25	12	M6	9,5	2,5	ø 8	24	45	3,5	22	20	110	3,8	0,175
04518-010015	C	right-hand type	58,5	40	18	M10	27	4,5	12,7	39	74	5,5	37	31,5	143	7,2	0,650
04518-006035	C	left-hand type	38,5	25	12	M6	9,5	2,5	ø 8	24	45	3,5	22	20	110	3,8	0,175
04518-010035	C	left-hand type	58,5	40	18	M10	27	4,5	12,7	39	74	5,5	37	31,5	143	7,2	0,650
04518-006020	D	right-hand type	38,5	25	12	M6	-	-	11	25	45	4,5	22	20	110	3,8	0,175
04518-010020	D	right-hand type	58,5	40	18	M10	-	-	18	40	74	7	34,5	31,5	143	7,2	0,650
04518-006040	D	left-hand type	38,5	25	12	M6	-	-	11	25	45	4,5	22	20	110	3,8	0,175
04518-010040	D	left-hand type	58,5	40	18	M10	-	-	18	40	74	7	34,5	31,5	143	7,2	0,650

Cam-operated Edge Clamps



Material:
Steel

Surface finish:
Case-hardened, black oxide finish and ground

Sample order:
nlm 04520-114X2

Note:
The cam-operated edge clamp is a rapid-action clamp, with which parts for machining can be pressed simultaneously against the solid stops and on a seat by the pivoting jaw. Its flat construction allows the full surface of parts to be machined without having to change the clamp. When released, the clamping jaw is retracted by the force of a spring.
Using the support 04512 the cam-operated edge clamp can also be placed in the desired position transversely to the T-slot.

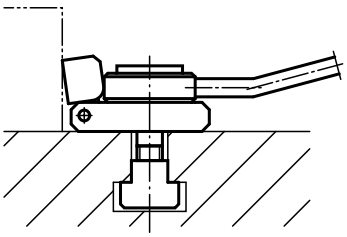

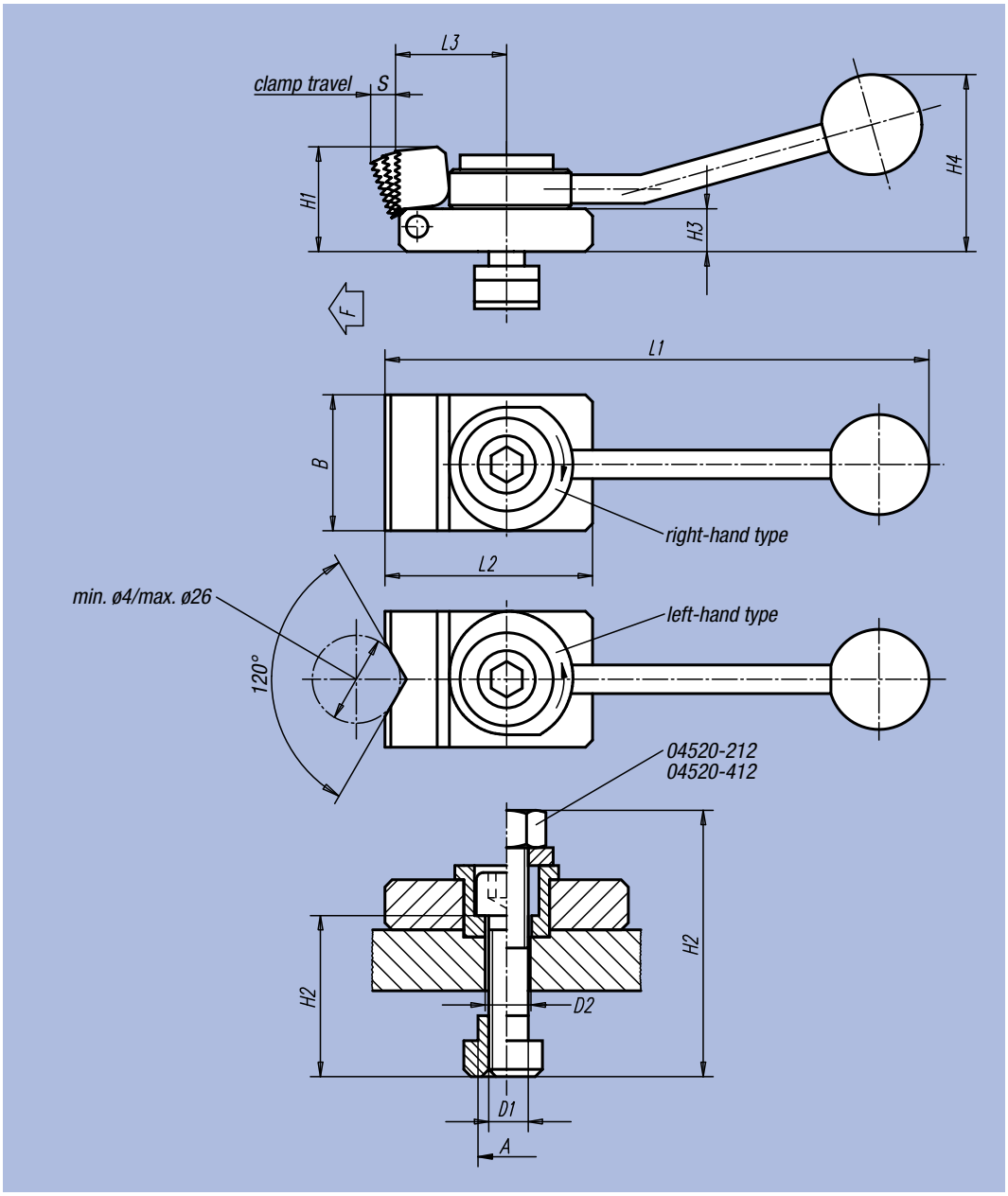

Order No. Surface finish left-hand type	Order No. Surface finish right-hand type	Surface finish	slot dimension A	D1	D2	L1	L2	L3	B	H1	H2	H3	H4	S	F max. kN	□ kg
04520-110X1	04520-310X1	even jaw	10	M8	8,4	132	50	32	32	20	30	8	40	3	3,5	0,220
04520-110X2	04520-310X2	V-block jaw	10	M8	8,4	132	50	32	32	20	30	8	40	3	3,5	0,220
04520-112X1	04520-312X1	even jaw	12	M8	8,4	132	50	32	32	20	30	8	40	3	3,5	0,220
04520-112X2	04520-312X2	V-block jaw	12	M8	8,4	132	50	32	32	20	30	8	40	3	3,5	0,220
04520-212X1	04520-412X1	even jaw	12	M12	12,5	190	72	40	48	38	60	16	62	4	7	0,860
04520-212X2	04520-412X2	V-block jaw	12	M12	12,5	190	72	40	48	38	60	16	62	4	7	0,860
04520-114X1	04520-314X1	even jaw	14	M8	8,4	132	50	32	32	20	30	8	40	3	3,5	0,220
04520-114X2	04520-314X2	V-block jaw	14	M8	8,4	132	50	32	32	20	30	8	40	3	3,5	0,220
04520-214X1	04520-414X1	even jaw	14	M12	12,5	190	72	40	48	38	40	16	62	4	7	0,870
04520-214X2	04520-414X2	V-block jaw	14	M12	12,5	190	72	40	48	38	40	16	62	4	7	0,870
04520-216X1	04520-416X1	even jaw	16	M12	12,5	190	72	40	48	38	40	16	62	4	7	0,890
04520-216X2	04520-416X2	V-block jaw	16	M12	12,5	190	72	40	48	38	40	16	62	4	7	0,890
04520-218X1	04520-418X1	even jaw	18	M12	12,5	190	72	40	48	38	40	16	62	4	7	0,910
04520-218X2	04520-418X2	V-block jaw	18	M12	12,5	190	72	40	48	38	40	16	62	4	7	0,910

Sliding Edge Clamps



Material:
Steel

Surface finish:
Body heat-treated and black oxide finish, clamping disc case-hardened and brass-coated

Sample order:
nlm 04521-10

Note:
Sliding Edge Clamps allow for space-saving and economical clamping of multiple workpieces.
When clamping multiple workpieces the rear side of the body can be used as a stop.
Mounting preferably in slots with B +0.05 mm. The contact height of the clamping disc can be varied with the depth of the slot.

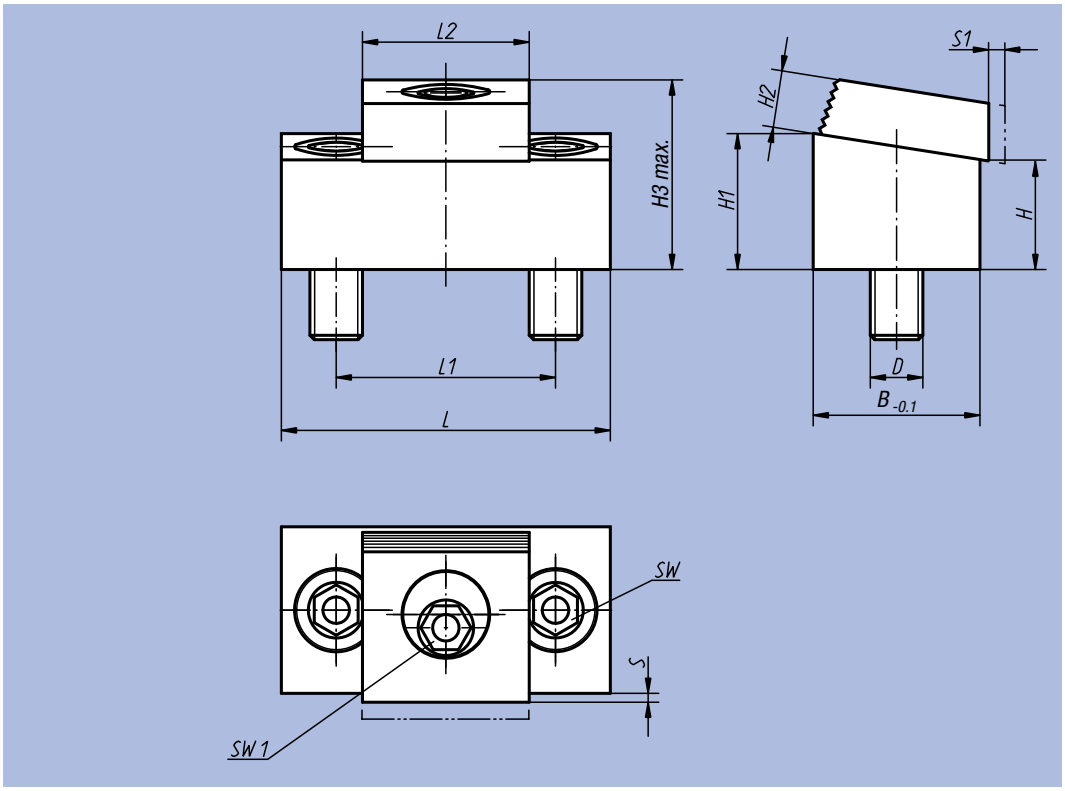

Example for multiple clampings with Sliding Edge Clamps

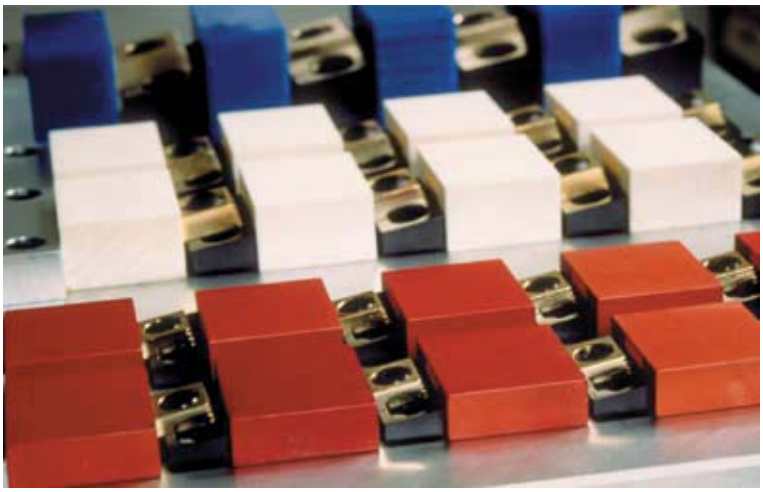

Order No.	L	L1	L2	B	H	H1	H2	H3 max.	S	D	S1 (Clamping travel)	SW	SW1	Clamping force kN	Tightening torque max. Nm	kg
04521-08	43,2	25,4	19	19	12,7	15,7	6,4	21,4	1,5	M8	1,6	5	7	8,9	28	0,100
04521-10	54	33,5	25,4	25,4	11,4	15,4	9,7	24,5	1,8	M10	2	7	8	17,8	88	0,178
04521-12	75	50,8	38	38,1	25,5	31,5	13	43	2,05	M12	2,5	10	12	26,7	135	0,720

Double Edge Clamps



Material:
Exterior part in aluminium profile, taper in hardened steel

Surface finish:
Exterior part anodized, taper black oxide finish

Sample order:
nlm 04522-08

Note:
A Double Edge Clamp clamps two workpieces simultaneously. It is perfectly suited to clamp both round and rectangular pieces. Due to its compact construction, space-saving multiple clamping is possible.

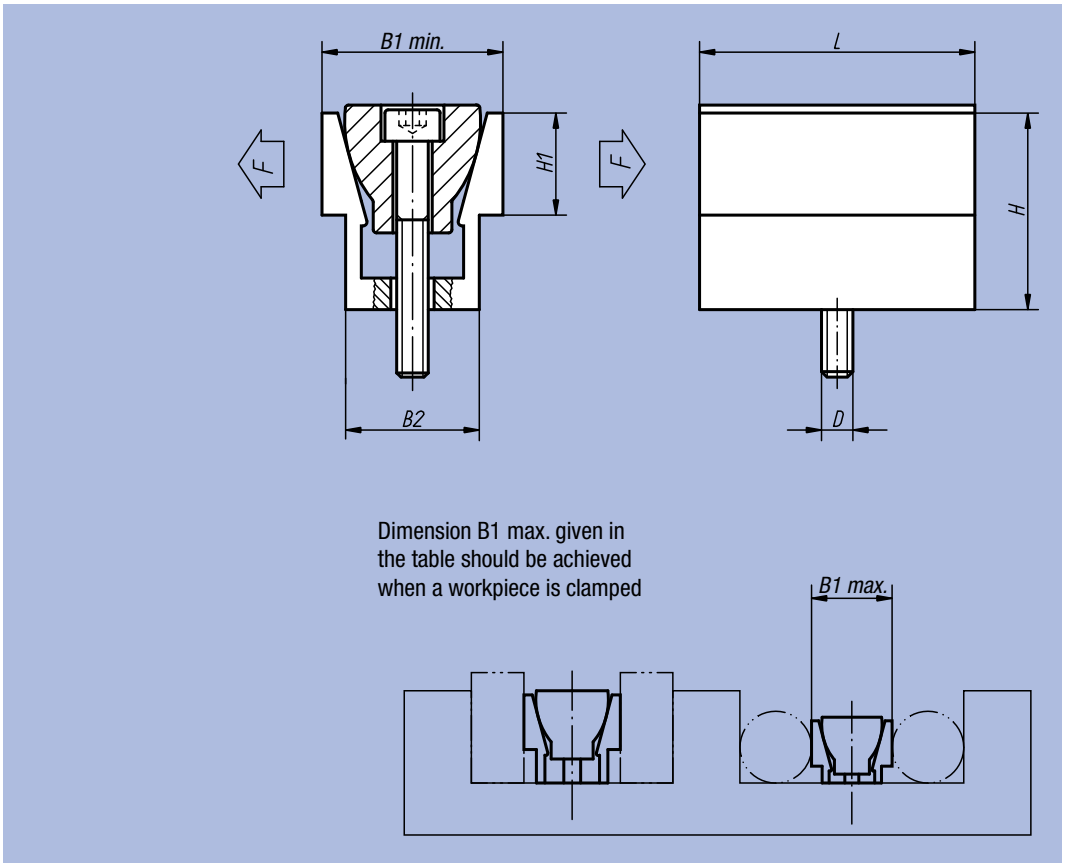

Order No.	D	L	B1 min. - max.	B2	H	H1	F kN	Tightening torque max. Nm	kg
04522-04	M4	15,9	12,3 - 13,1	10,4	14,5	5,6	2,2	3,4	0,012
04522-06	M6	23,8	18,6 - 19,9	16,1	19	9,5	6,7	14,3	0,040
04522-08	M8	31,7	24,8 - 26,6	20,8	25,9	12,7	8,9	14,5	0,090
04522-12	M12	47,6	37,3 - 39,7	30,8	38,6	19	15,6	38,4	0,300
04522-16	M16	63,5	49,7 - 52,8	41,2	51,5	25,4	26,7	74,6	0,710

Double Edge Clamps

with machining allowance



Material:
Exterior part in aluminium profile, taper in hardened steel

Surface finish:
Exterior part anodized, taper black oxide finish

Sample order:
nlm 04523-08

Note:
A Double Edge Clamp clamps two workpieces simultaneously. By means of appropriate countersinking workpieces can be clamped with form-fit and thus absolutely safely and free of torsion.
Due to its compact construction, space-saving multiple clamping is possible.



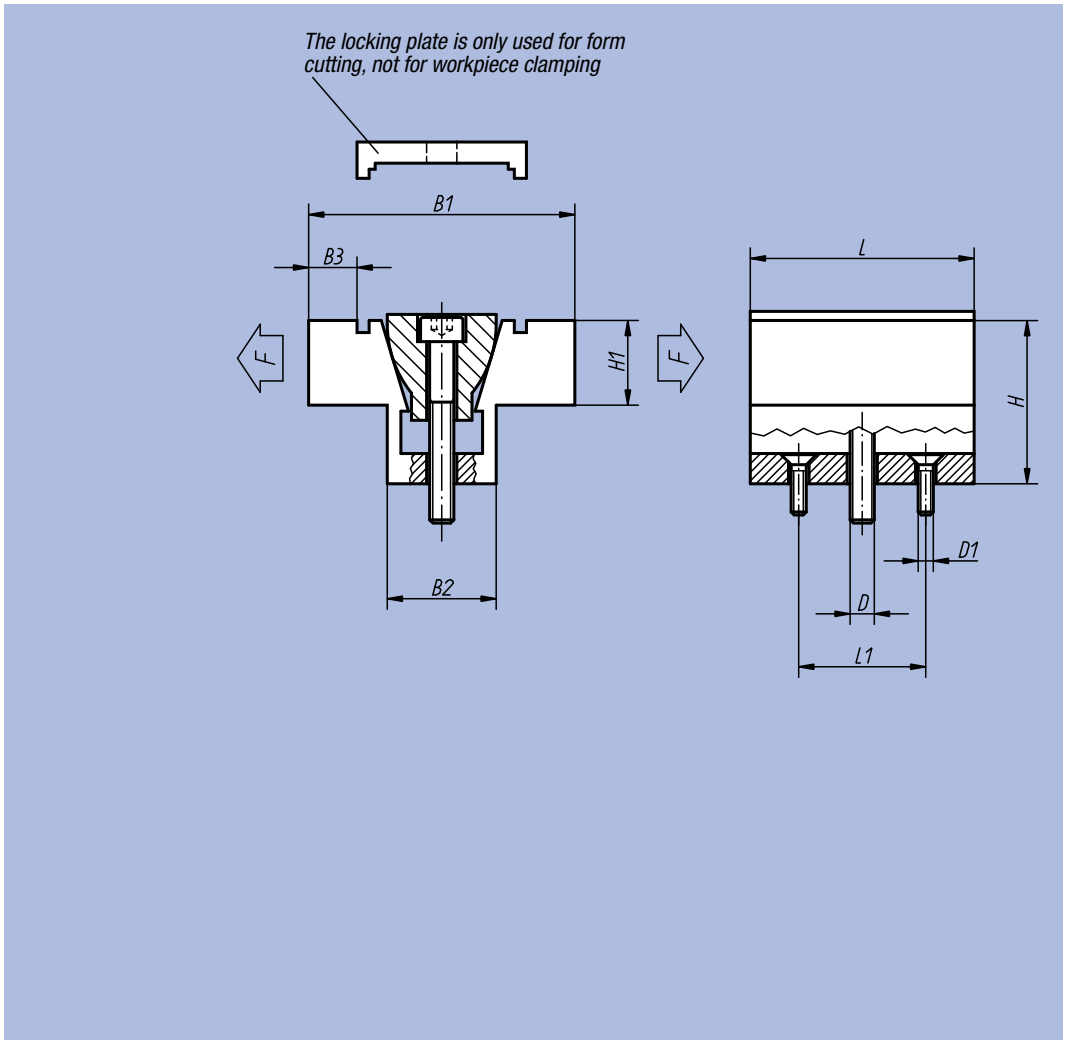

Order No.	D	D1	L	L1	B1 min. - max.	B2	B3	H	H1	F kN	Tightening torque max. Nm	kg
04523-04	M4	M2	15,9	10,2	28,6 - 29,1	10,6	4,6	12,7	6,3	2,2	3,4	0,018
04523-06	M6	M4	23,9	15,9	38,1 - 39	16,1	6,6	19	9,5	6,7	14,3	0,056
04523-08	M8	M4	31,8	20,6	50,8 - 52	20,8	9,4	25,4	12,7	8,9	14,5	0,123
04523-12	M12	M5	47,6	30,5	76,2 - 78	30,9	14,8	38,1	19	15,6	38,4	0,420
04523-16	M16	M6	63,5	40	101,6 - 103,9	41,3	20,3	50,8	25,4	26,7	74,6	1,008

Taper Clamp

clamping surface smooth or serrated



Material, surface finish:
Double edge and clamping segments tempered steel, hardened and black

Sample order:
nlm 04524-2208

Note:
Their compact design make the Taper Clamps especially suitable for multiple clamping. The hardened and ground taper surfaces make high clamping forces possible.
The appropriate Taper Clamps can be mounted either in an M.T.P. hole or a T-slot. Inserting a socket head screw moves the two clamping segments outwards and presses the workpieces against the fixed stop of the machining device.
The Taper Clamp can be displaced or balancing tolerances with the incorporated longhole.

Travel path according:
M8 = ±0.5 mm
M10 = ±1.0 mm
M12 = ±1.0 mm
M16 = ±1.5 mm

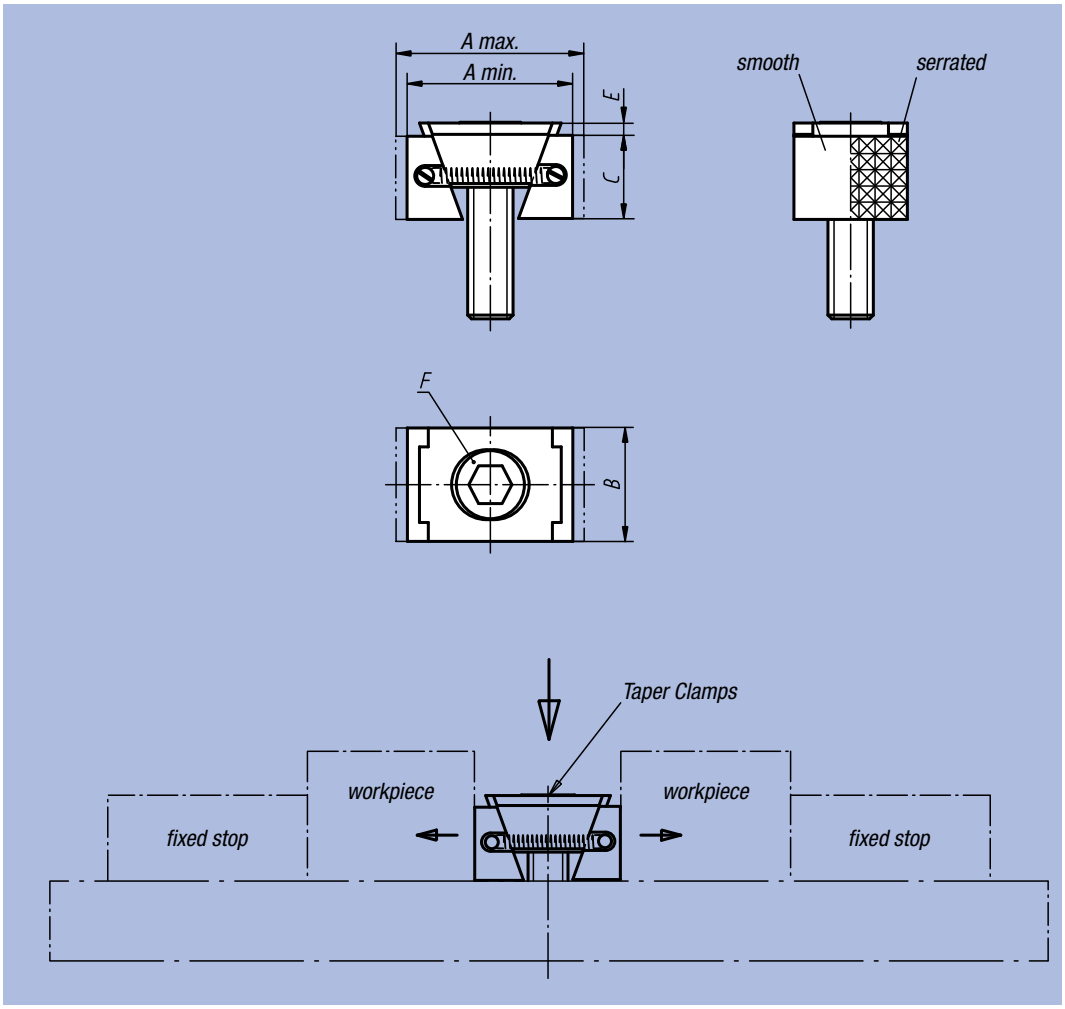

Taper Clamp, strait model

Order No. Surface finish clamping surface smooth	Order No. Surface finish clamping surface serrated	A min.	A max.	B	C	E	F Socket Head Screw DIN 912	Clamping force kN	Tightening torque Nm
04524-1108	04524-2108	30,5	33,5	24	15	2	M8x25	15	25
04524-1110	04524-2110	32	37	28	19	3,5	M10x25	20	49
04524-1112	04524-2112	44	49,5	30	22	3,5	M12x40	30	85
04524-1116	04524-2116	55	62	40	29	4	M16x60	50	210

Taper Clamp, broad model

Order No. Surface finish clamping surface smooth	Order No. Surface finish clamping surface serrated	A min.	A max.	B	C	E	F Socket Head Screw DIN 912	Clamping force kN	Tightening torque Nm
04524-1208	04524-2208	30,5	33,5	30	15	2	M8x25	15	25
04524-1210	04524-2210	32	37	38	19	3,5	M10x25	20	49
04524-1212	04524-2212	44	49,5	48	22	3,5	M12x40	30	85
04524-1216	04524-2216	55	62	48	29	4	M16x60	50	210

Taper Clamp

with machining allowance



Material, surface finish:
Double edge and clamping segments tempered steel, heat-treated and black

Sample order:
nlm 04524-3110

Note:
The special feature of the Taper Clamps lies in the added length. This extra length allows for forms adjusted to the workpiece geometry to be incorporated.
Their compact design make the Taper Clamps especially suitable for multiple clamping. The hardened and ground taper surfaces make high clamping forces possible.
The appropriate Taper Clamps can be mounted either in an M.T.P. hole or a T-slot. Inserting a socket head screw moves the two clamping segments outwards and presses the workpieces against the fixed stop of the machining device.
The Taper Clamp can be displaced or balancing tolerances with the incorporated longhole.

Travel path according:
M8 = ±0.5 mm
M10 = ±1.0 mm
M12 = ±1.0 mm
M16 = ±1.5 mm

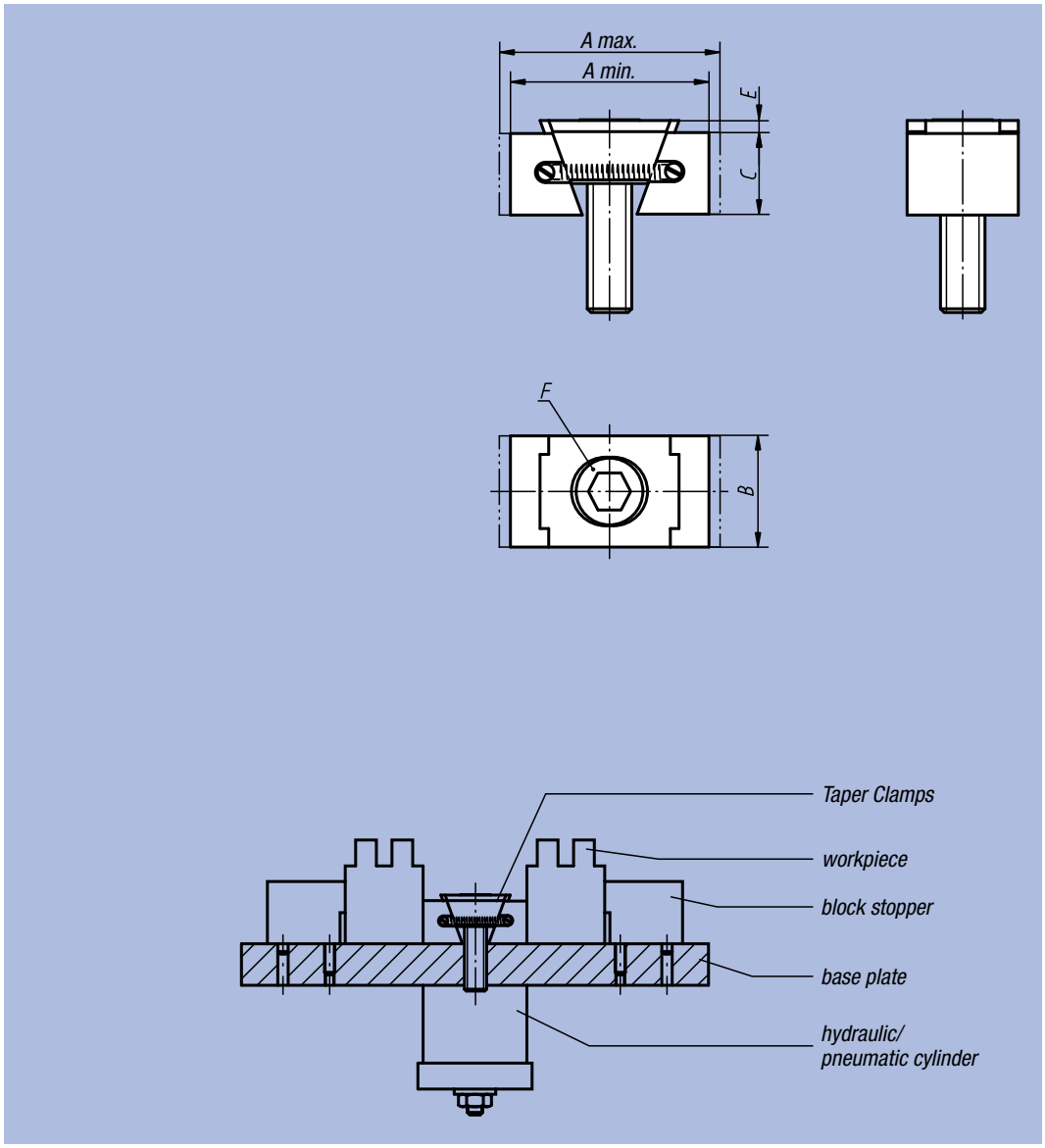

Order No.	Surface finish	A min.	A max.	B	C	E	F Socket Head Screw DIN 912	Clamping force kN	Tightening torque Nm
04524-3108	strait	36,5	39,5	24	15	2	M8x25	11	19
04524-3110	strait	42	47	28	19	3,5	M10x25	15	37
04524-3112	strait	54	59,5	30	22	3,5	M12x40	23	65
04524-3116	strait	65	72	40	29	4	M16x60	38	160
04524-3208	broad	36,5	39,5	30	15	2	M8x25	11	19
04524-3210	broad	42	47	38	19	3,5	M10x25	15	37
04524-3212	broad	54	59,5	48	22	3,5	M12x40	23	65
04524-3216	broad	65	72	48	29	4	M16x60	38	160

Taper Clamping Units

Form A



Material, surface finish:
Body in hardened tool steel, clamping segments in hardened tool steel (49-51 HRC) with black oxide finish, taper surfaces ground

Sample order:
nlm 04525-1618

Note:
Because of their compact design, the Taper Clamping Units are especially suitable for horizontal and vertical multiple clamping. The hardened and ground taper surfaces make high clamping forces possible.
The appropriate Taper Clamping Units can be mounted either in an M.T.P. hole or a T-slot. Inserting a socket head screw to DIN 912 moves the two clamping segments outwards and presses the workpieces against a fixed stop.

The clamping jaws with Order No. 04525-08 are not serrated.

The Taper Clamping Unit can be displaced with the incorporated long hole.

Travel path according to Order No.:
04525-08 = ±0.5 mm
04525-12 = ±1.0 mm
04525-16 = ±1.5 mm

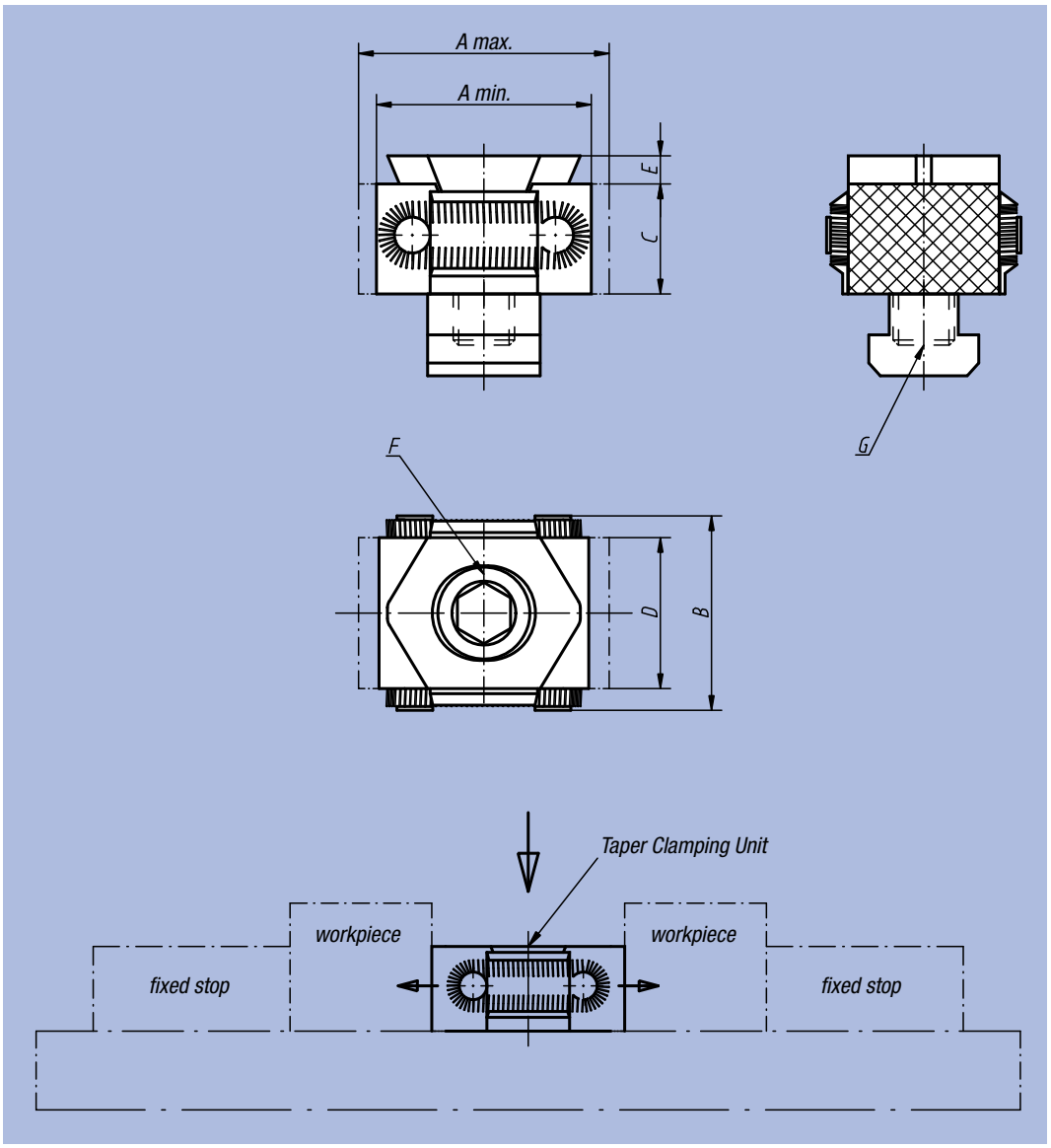

Order No.	A min.	A max.	B	C	D	E	F Socket Head Screw DIN 912	G	Clamping force kN	Tightening torque Nm	□ kg
04525-08	27	31	29	15	21	2,5	M8x25	for threaded hole	15	25	0,068
04525-0810	27	31	29	15	21	2,5	M8x25	for T-slot 10	15	25	0,080
04525-12	42	49	41	22	30	4	M12x40	for threaded hole	30	85	0,224
04525-1214	42	49	41	22	30	4	M12x30	for T-slot 14	30	85	0,251
04525-16	57	66	56	29	42	5	M16x60	for threaded hole	50	210	0,583
04525-1618	57	66	56	29	42	5	M16x50	for T-slot 18	50	210	0,638

Taper Clamping Units

Form A+L with extra length for made-to-order forms



Material, surface finish:
Body in hardened tool steel, clamping segments in tool steel (30 HRC) with black oxide finish, taper surfaces ground; specially designed clamping ends to suit your application or other hardness values available on request

Sample order:
nlm 04526-12

Note:
The special feature of the Taper Clamping Units "Form A+L" lies in the added length of 3 mm per clamping jaw for model 04526-08 and 5 mm for models 04526-12 and 04526-16. This extra length allows for forms adjusted to the workpiece geometry to be incorporated (see illustration).

The clamping jaws with Order No. 04526-08 are not serrated.

Travel path according to Order No.:
04526-08 = ±0.5 mm
04526-12 = ±1.0 mm
04526-16 = ±1.5 mm

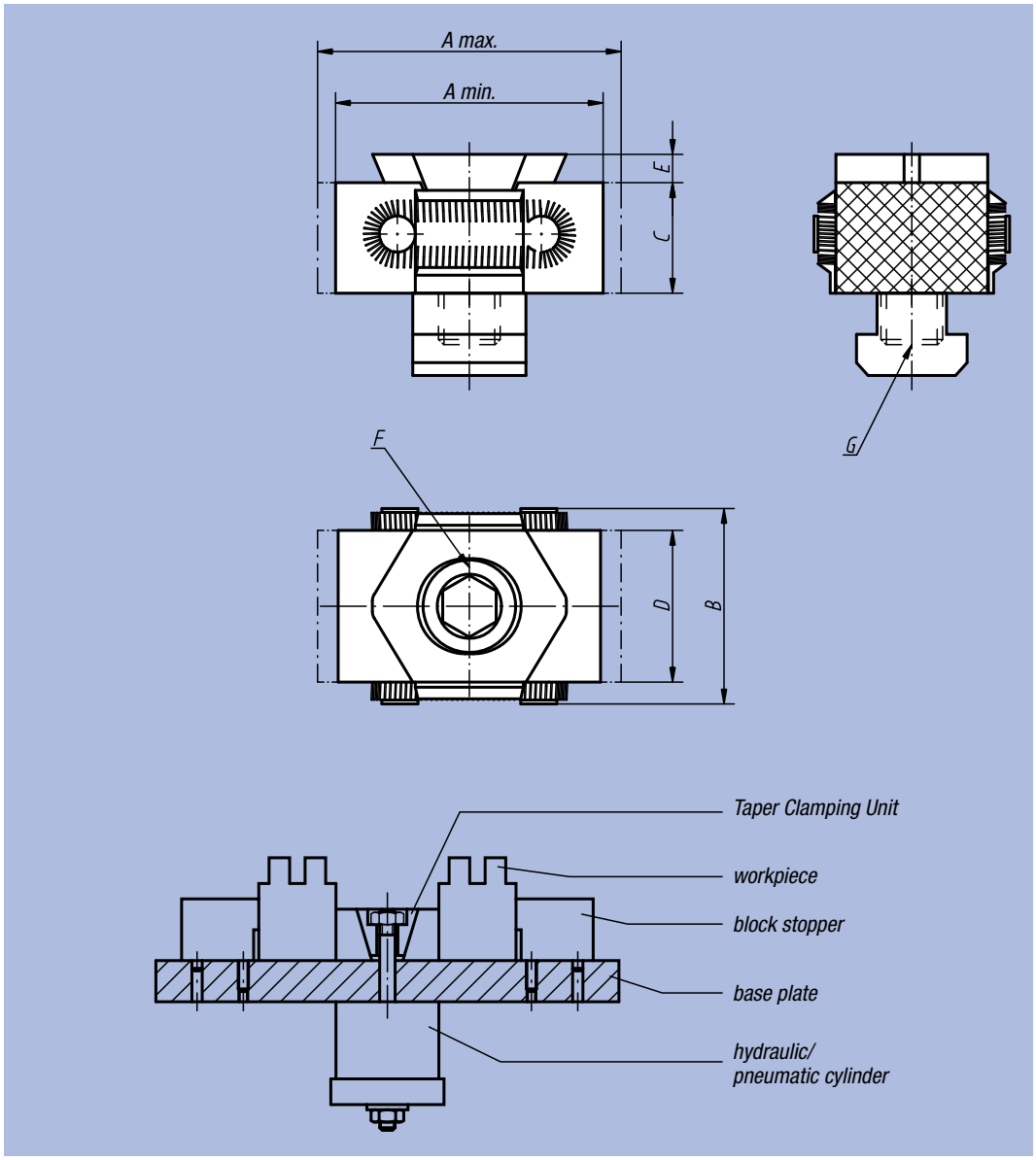

Order No.	A min.	A max.	B	C	D	E	F Socket Head Screw DIN 912	G	Clamping force kN	Tightening torque Nm	kg
04526-08	33	37	29	15	21	2,5	M8x25	for threaded hole	15	25	0,084
04526-0810	33	37	29	15	21	2,5	M8x25	for T-slot 10	15	25	0,096
04526-12	52	59	41	22	30	4	M12x40	for threaded hole	30	85	0,276
04526-1214	52	59	41	22	30	4	M12x30	for T-slot 14	30	85	0,303
04526-16	67	76	56	29	42	5	M16x60	for threaded hole	50	210	0,668
04526-1618	67	76	56	29	42	5	M16x50	for T-slot 18	50	210	0,722

Taper Clamping Units

Form B



Material, surface finish:
Body in hardened tool steel, clamping segments in hardened tool steel (49-51 HRC) with black oxide finish, taper surfaces ground

Sample order:
nlm 04527-1214

Note:
Because of their compact design, the Taper Clamping Units are especially suitable for horizontal and vertical multiple clamping. The hardened and ground taper surfaces make high clamping forces possible.
The appropriate Taper Clamping Units can be mounted either in an M.T.P. hole or a T-slot. Inserting a socket head screw to DIN 912 moves the two clamping segments outwards and presses the workpieces against a fixed stop.
The so-called “hold-down effect“ is caused by the double tapers of this model.

Travel path according to Order No.:
04527-12 = ±1.0 mm
04527-16 = ±1.5 mm

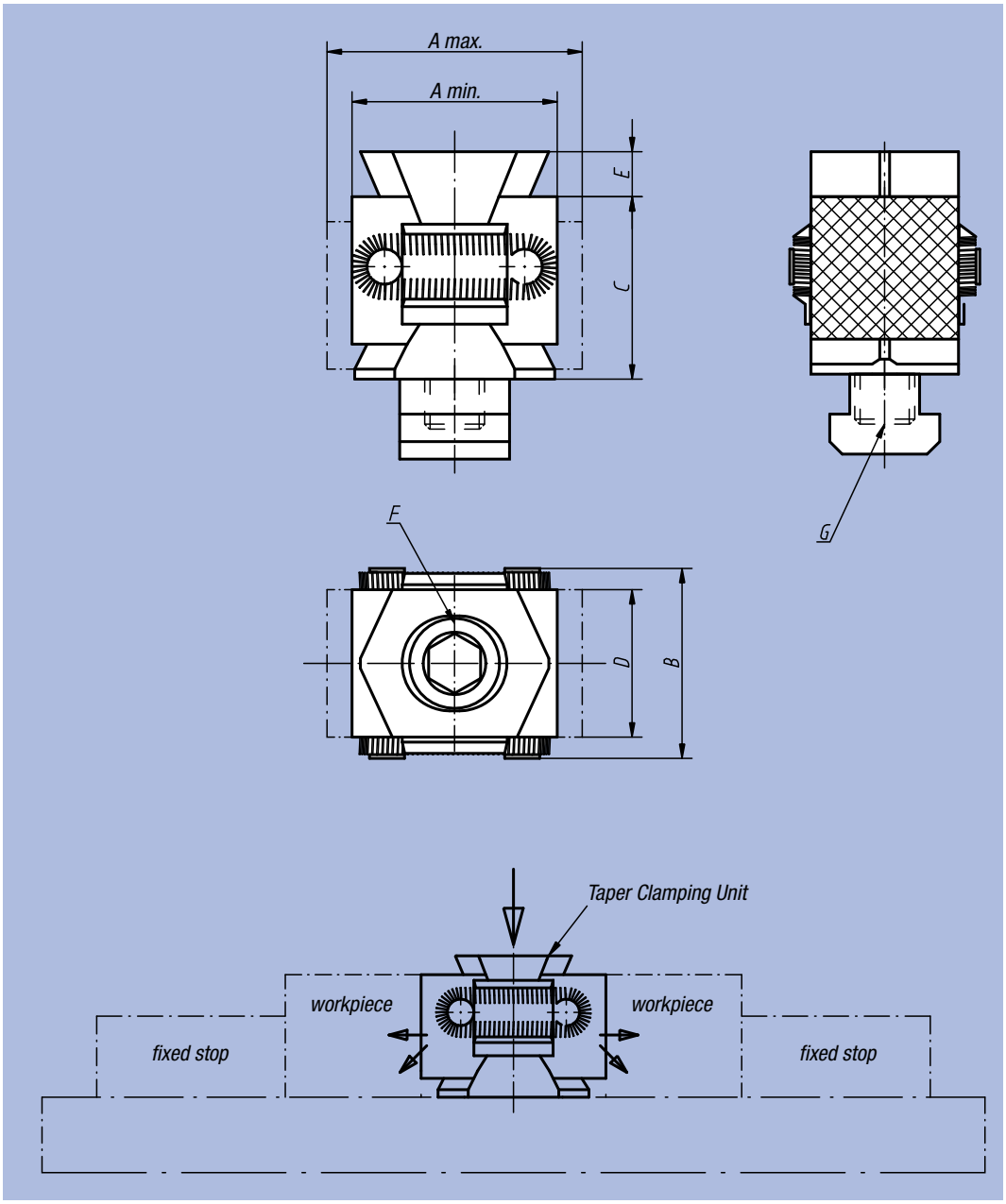

Order No.	A min.	A max.	B	C	D	E	F Socket Head Screw DIN 912	G	Clamping force kN	Tightening torque Nm	kg
04527-12	42	49	41	36	30	5	M12x60	for threaded hole	40	85	0,318
04527-1214	42	49	41	36	30	5	M12x50	for T-slot 14	40	85	0,353
04527-16	57	67	56	50	42	5	M16x80	for threaded hole	60	210	0,843
04527-1618	57	67	56	50	42	5	M16x70	for T-slot 18	60	210	0,912

Application: taper clamping units

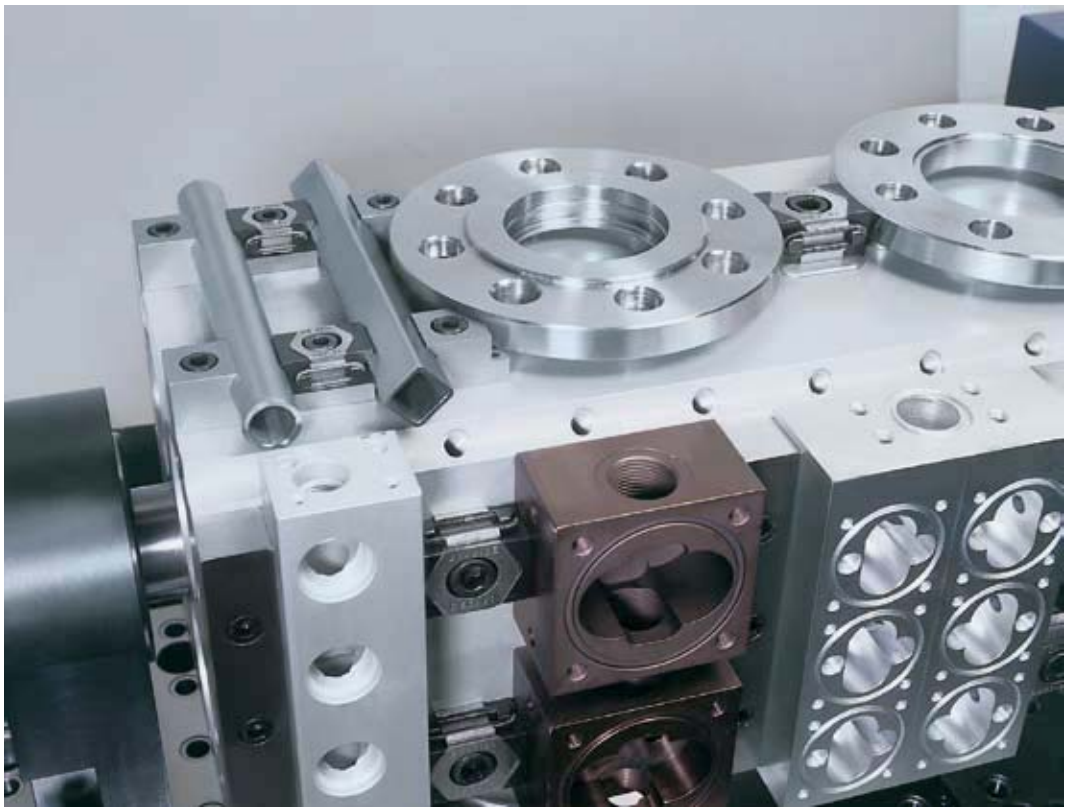

Notes:

Application: taper clamping units

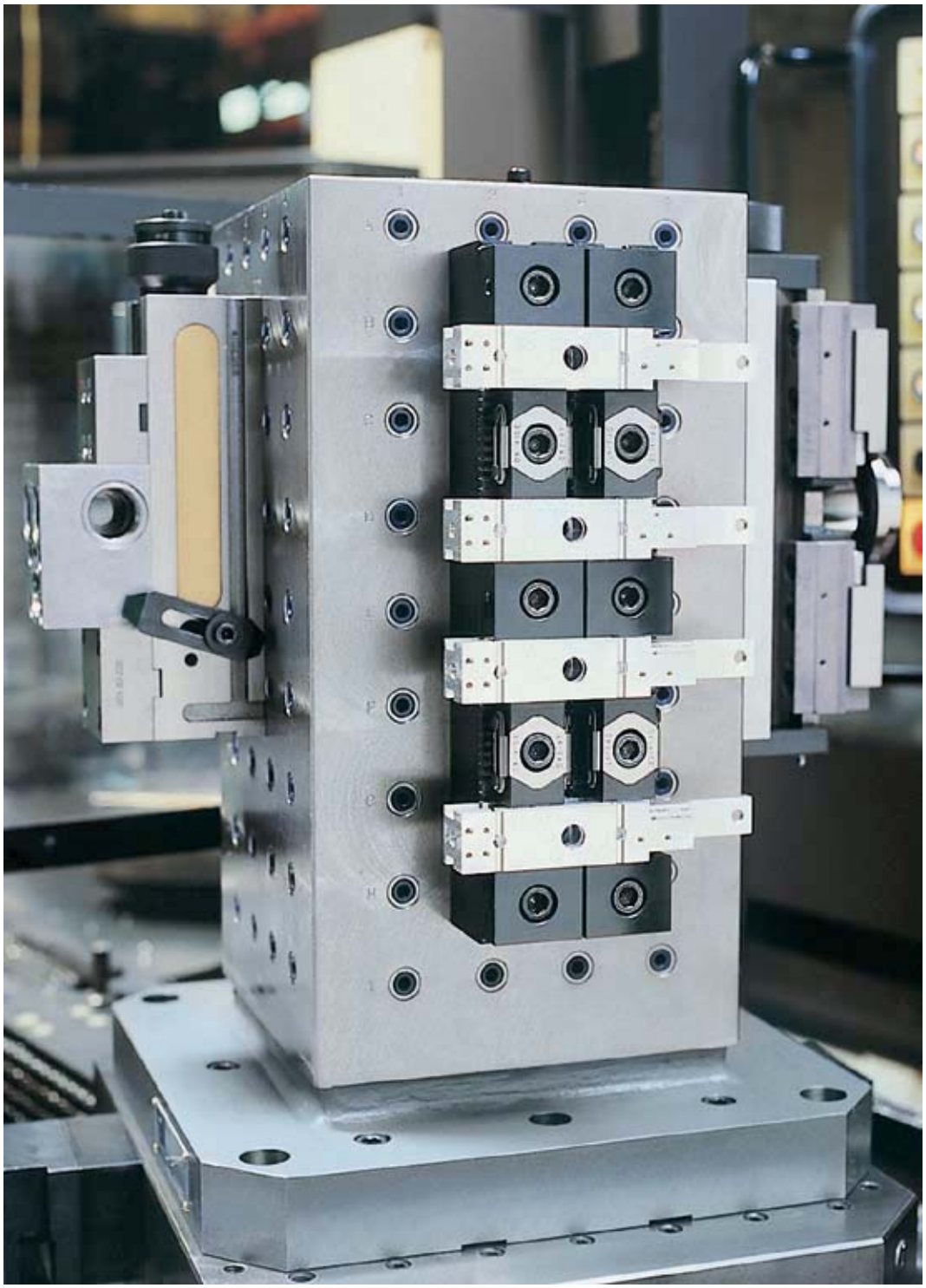

Narrow Edge Clamps

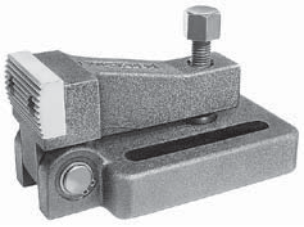

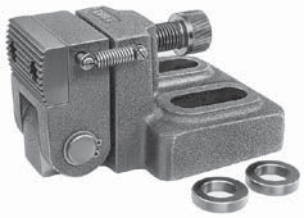

Material:
Body: nodular graphite cast iron (GJS);
jaw: hardened tempered steel

Surface finish:
Painted black;
jaw: polished

Sample order:
nlm 04530-02

Note:
The narrow edge clamp presses the part for machining against the narrow edge brace, at the same time the part is prevented from lifting up.
The narrow edge clamp and brace are tightened with DIN 912 cylinder bolts. Secure clamping is guaranteed where the narrow edge clamps and braces are used in pairs.

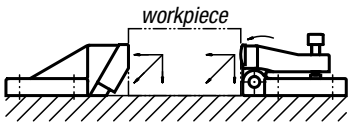

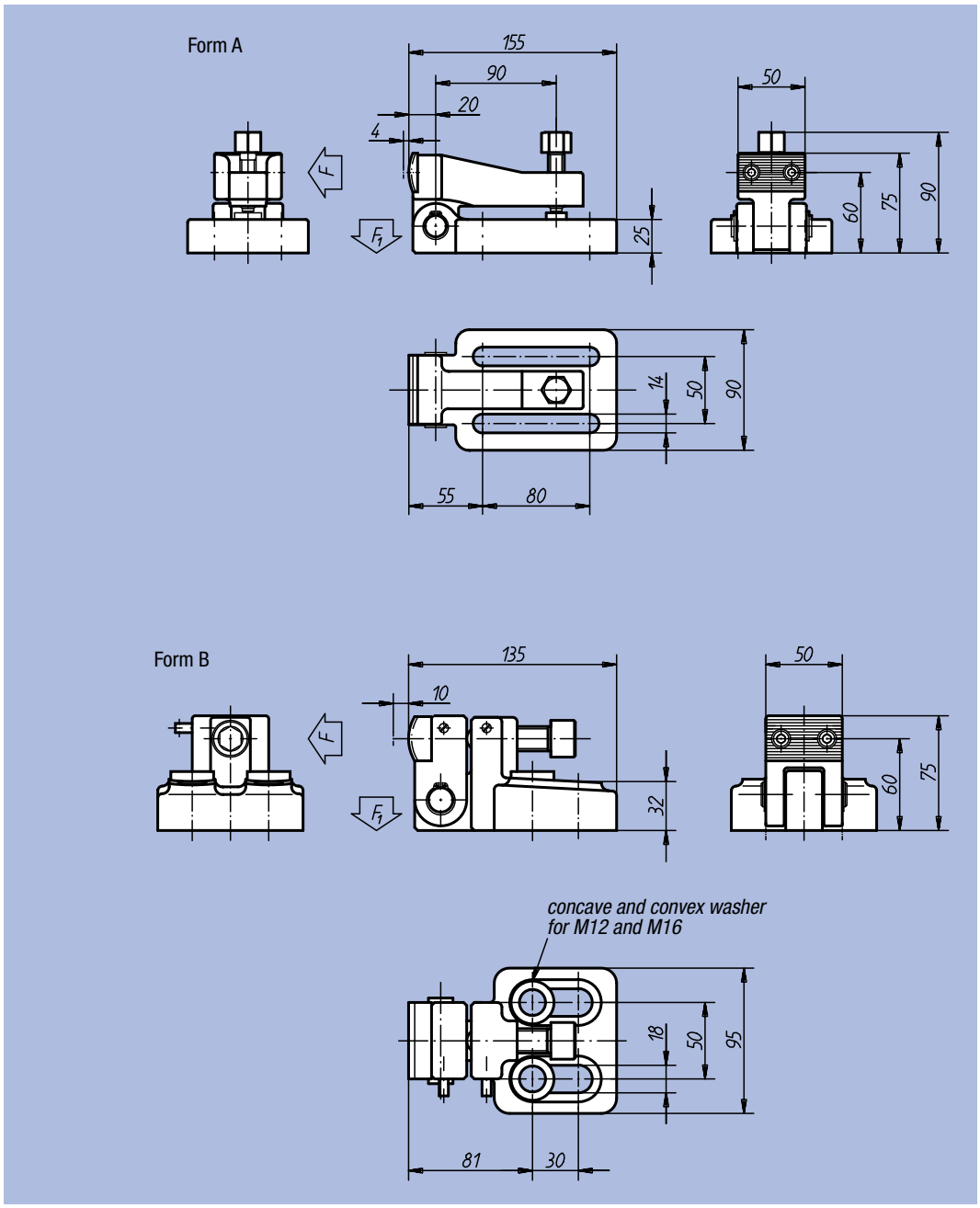

Order No.	Form	Material of jaw	F kN	F1 kN	kg
04530-01	A	tempered steel	34,9	1,3	2,400
04530-03	B	tempered steel	39	2,4	2,900

Narrow Edge Brace





Material:
Body: nodular graphite cast iron (GJS);
jaw: hardened tempered steel

Surface finish:
Painted black;
jaw: polished

Sample order:
nlm 04540-01

Note:
The narrow edge clamp presses the part for machining against the narrow edge brace, at the same time the part is prevented from lifting up.
The narrow edge clamp and brace are tightened with DIN 912 cylinder bolts. Secure clamping is guaranteed where the narrow edge clamps and braces are used in pairs.

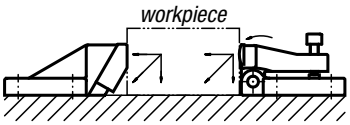

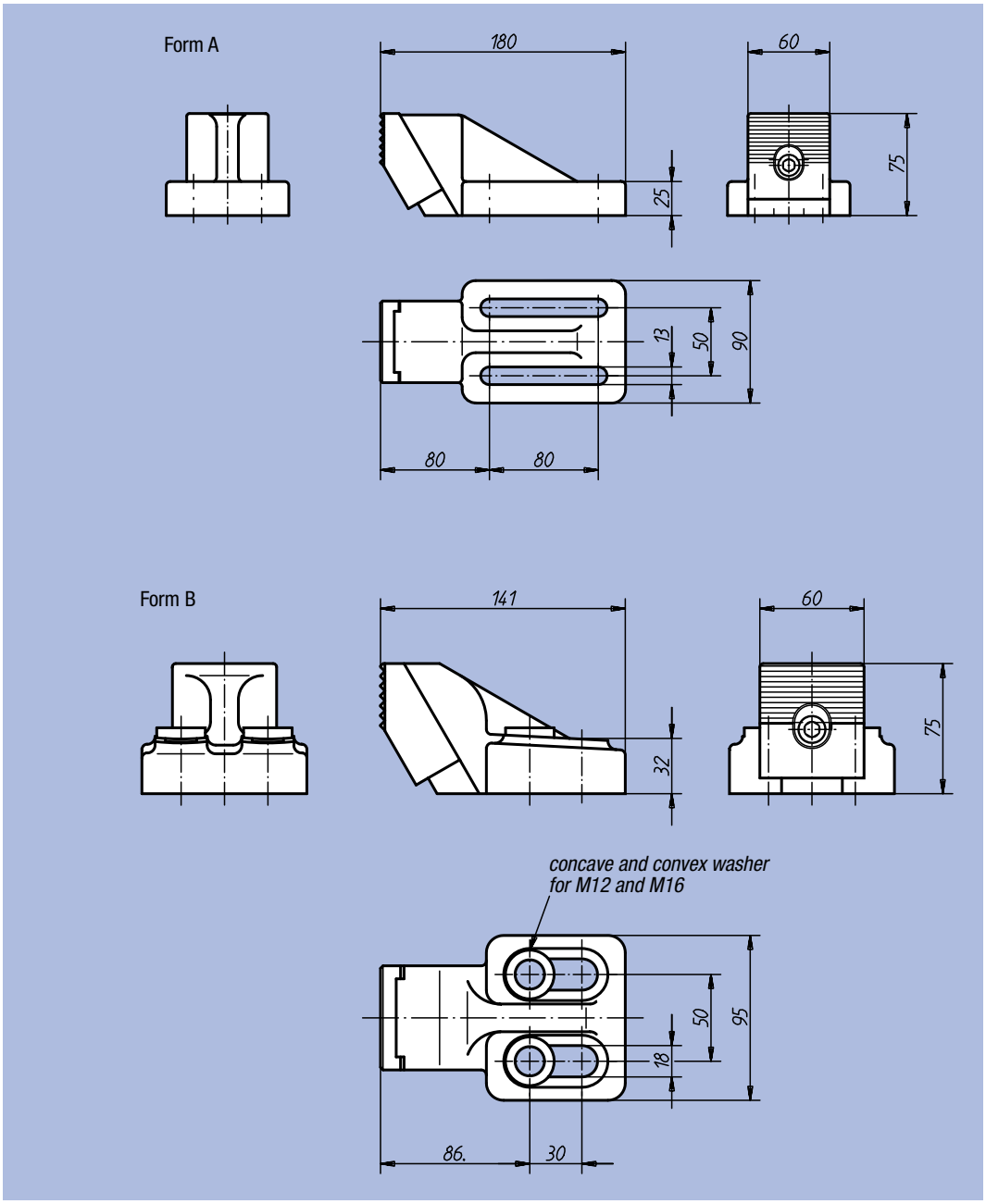

Order No.	Form	Material of jaw	kg
04540-01	A	tempered steel	2,900
04540-02	B	tempered steel	2,400

Side Clamps



Material:
Body: steel 1.1191

Surface finish:
Black oxide finish;
centring sleeve hardened

Sample order:
nlm 04562-112
(toggle locator not supplied)

Note:
This assembly, comprising the adjustable side clamp and brace, is used to clamp and hold down in a single working stage. The brace converts the clamping force into downward force and therefore guarantees that the part for machining is efficiently held down. The side clamp is fitted with 2 DIN 913 threaded pins, which prevent backward slippage during the clamping process.
Two centring sleeves for the perfect positioning of the side clamp and the brace are supplied as standard.
For suitable seats see: 02000, 02007, 02041, 02080.

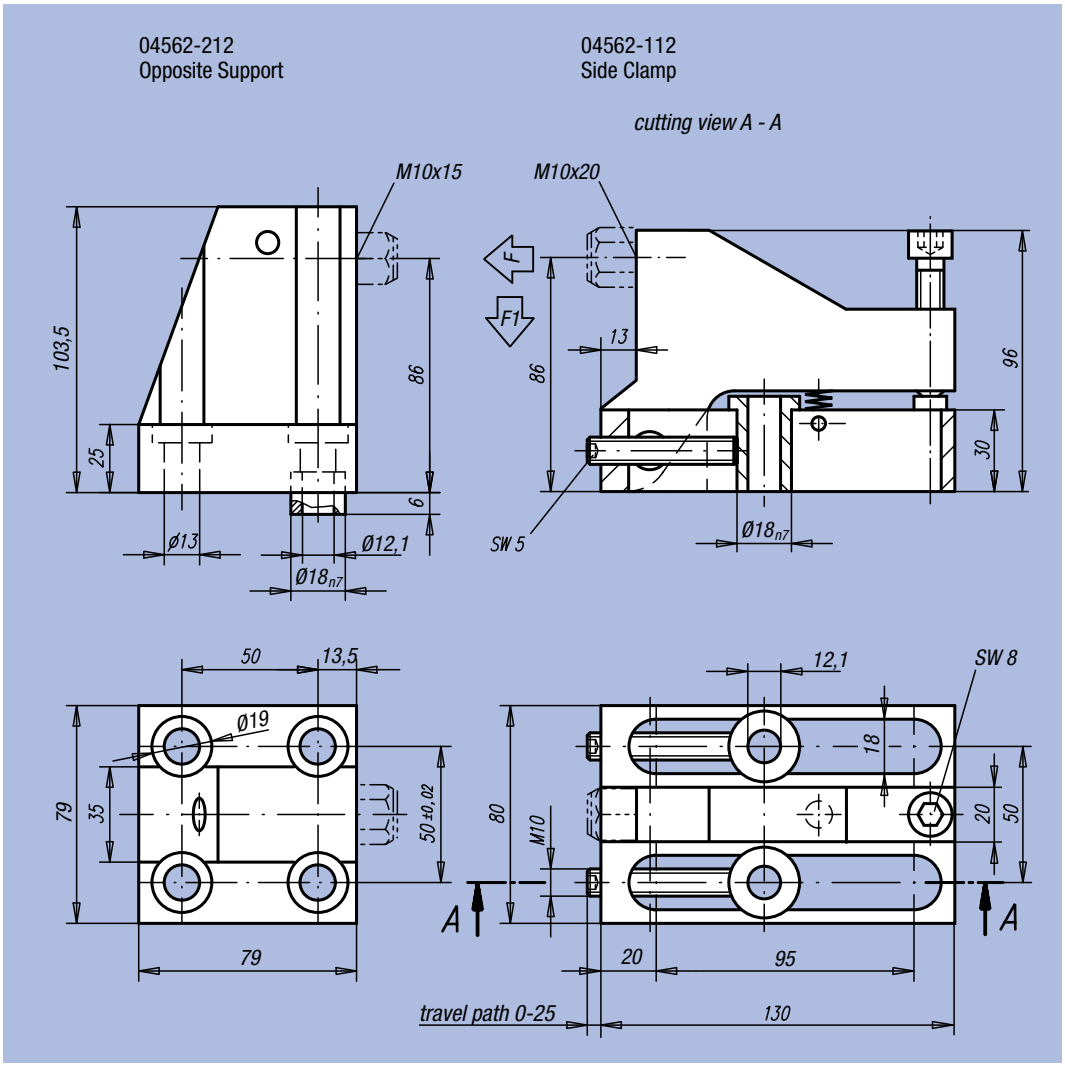

Order No.	F kN	F1 kN	kg
04562-112	25	5	2,500
04562-212	22,5	4,5	2,000

Side Clamps



Material, surface finish:
Base body and handle in tempered steel, base body hardened and black oxide finish, handle black oxide finish; jaw and cam in hardened tool steel and black oxide finish;
ball knob in black duroplastic PF 31

Sample order:
nlm 04565-0501

Note:
* Admissible hand force to operate the handle.

Accessory:
Standard handles 06355. Screw-in handles with adjustable torque 06357.

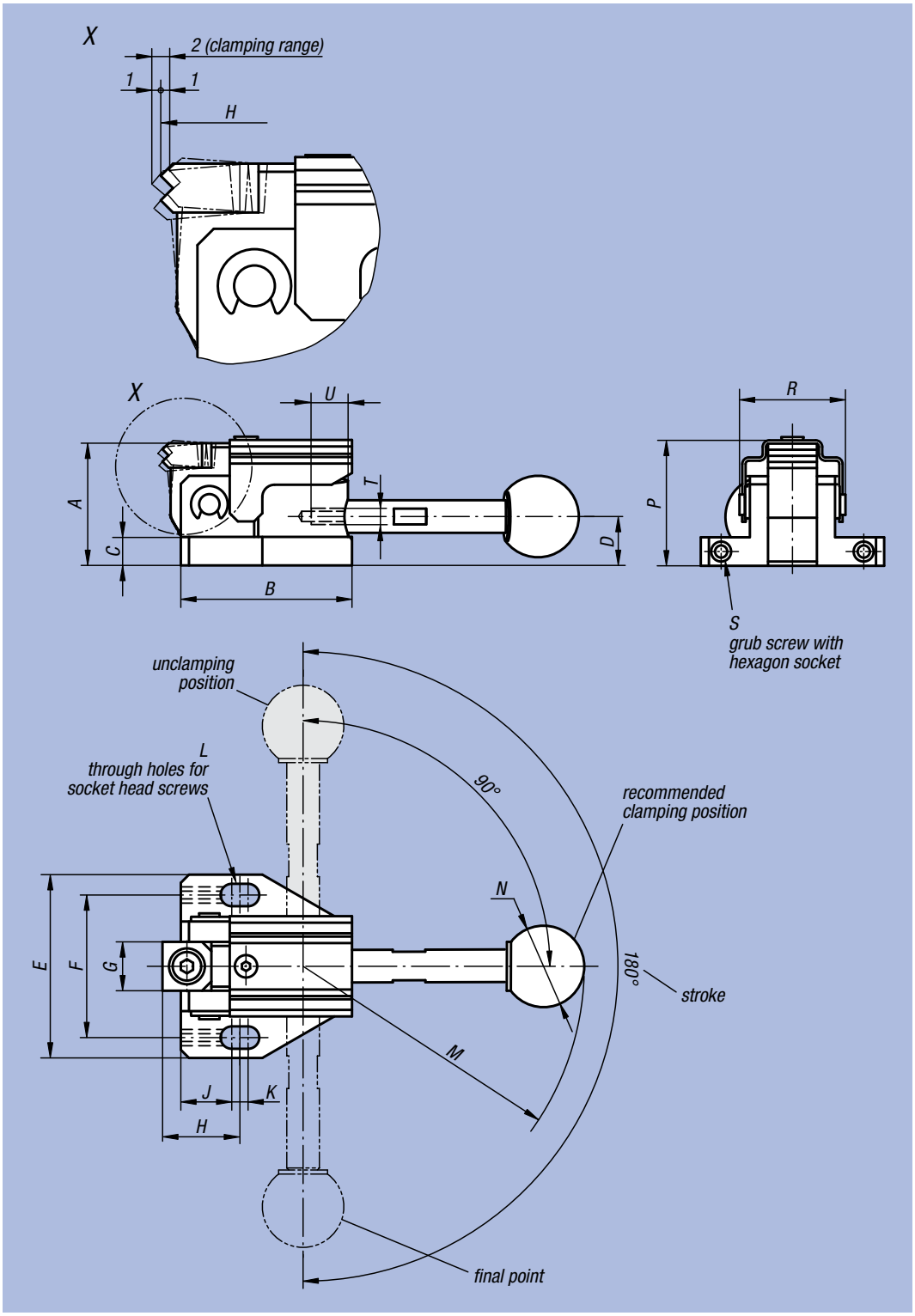

Technical Information:

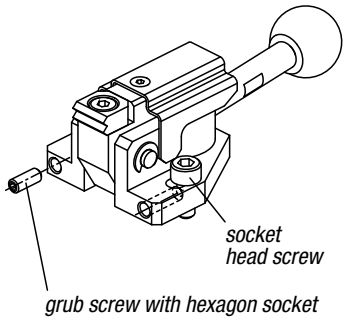

The oblong hole allow adjusting the clamping range. Tightening the grub screws in the base front allows preventing the side clamp from sliding back at the clamping mode.

Order No.	Surface finish	A	B	C	D	E	F	G	H	J	K	L	M	N	P	R	S	T	U	Clamping force N	Hand force N	kg
04565-0500	without handle	30	42	7	12	45	35	12	19	12,5	4	M5	69	20	31	26	M4x10	M5	7	3000	150*	0,180
04565-0501	with handle	30	42	7	12	45	35	12	19	12,5	4	M5	69	20	31	26	M4x10	M5	7	3000	150*	0,210
04565-0800	without handle	40	62	10	16	65	50	16	28	18,5	5	M8	104	25	41	38	M4x15	M6	9,5	4000	200*	0,530
04565-0801	with handle	40	62	10	16	65	50	16	28	18,5	5	M8	104	25	41	38	M4x15	M6	9,5	4000	200*	0,590

Toe Clamps



Material:
Tempered steel

Surface finish:
Heat-treated and black oxide finish

Sample order:
nlm 04570-0806

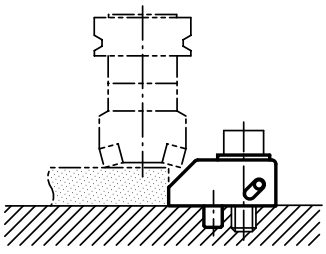

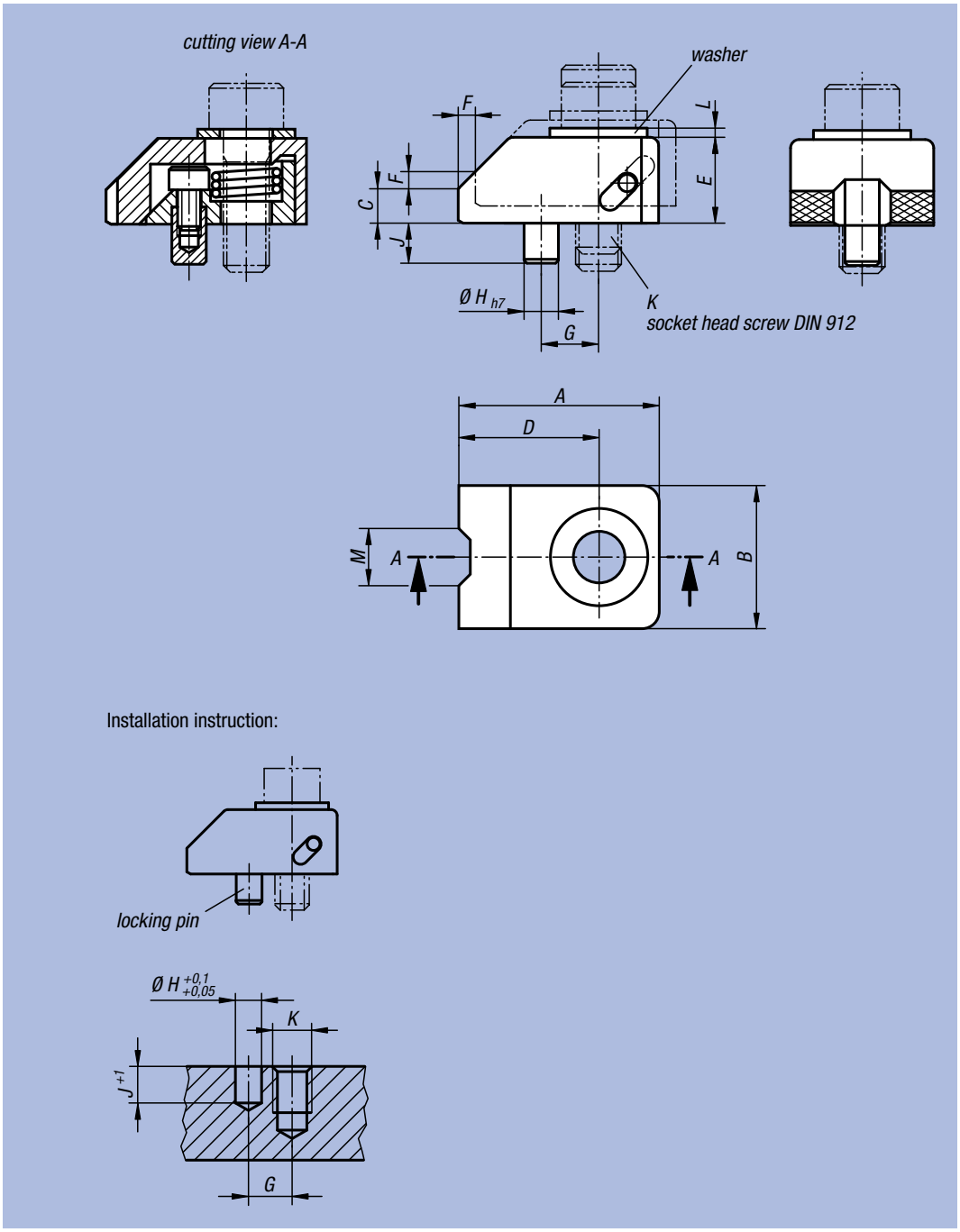

Order No.	A	B	C	D	E	F	G	H	J	K	L	M	Clamping force N	Tightening torque Nm	kg
04570-0806	35	25	6	24,5	15	3	10	6	7	M8	1,6	10	7000	25	0,100
04570-1008	43	30	8	29	19	4	12	6	7	M10	2	11	8500	50	0,185
04570-1209	54	35	9	37	23	5	16	8	10	M12	2,3	12	20000	90	0,320
04570-1610	65	40	10	45	25	6	20	10	10	M16	3,2	14	40000	200	0,520

Toe Clamps

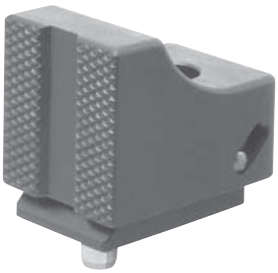

Material:
Tempered steel
Surface finish:
Heat-treated and black oxide finish
Sample order:
nlm 04570-0825

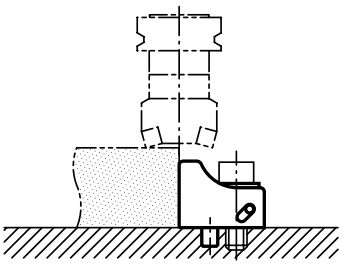

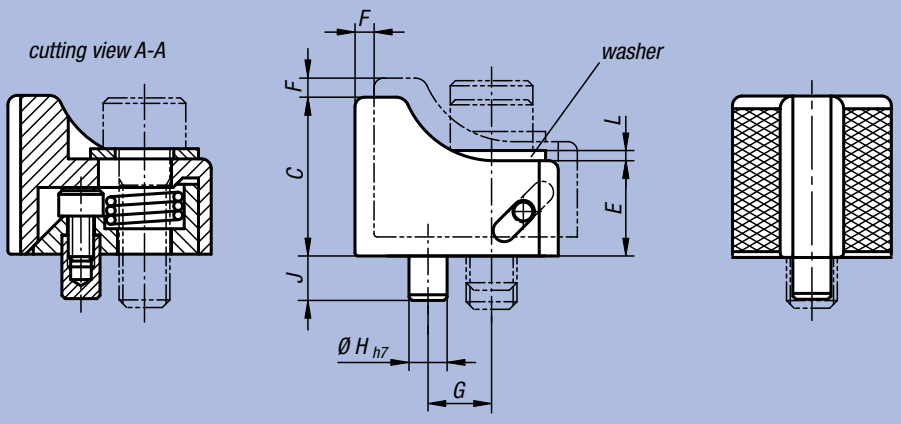

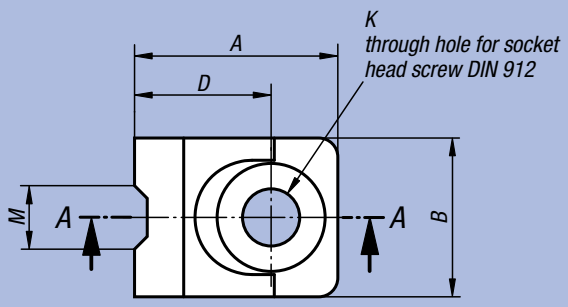

Installation instruction:

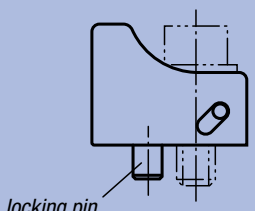

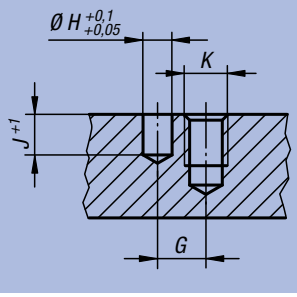

Order No.	A	B	C	D	E	F	G	H	J	K	L	M	Clamping force N	Tightening torque Nm	kg
04570-0825	32	25	25	21,5	15	3	10	6	7	M8	1,6	10	7000	25	0,115
04570-1032	40	30	32	26	19	4	12	6	7	M10	2	11	8500	50	0,225
04570-1238	50	35	38	33	23	5	16	8	10	M12	2,3	12	20000	90	0,390
04570-1645	60	40	45	40	25	6	20	10	10	M16	3,2	14	40000	200	0,640

Side Clamps



Material, surface finish:
Housing in tempered steel, black oxide finish;
arm in tempered steel, heat-treated and black oxide finish;
jaw in hardened tool steel, heat-treated and black oxide finish

Sample order:
nlm 04575-080400

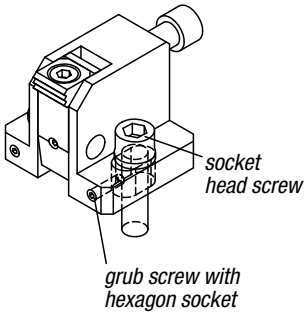

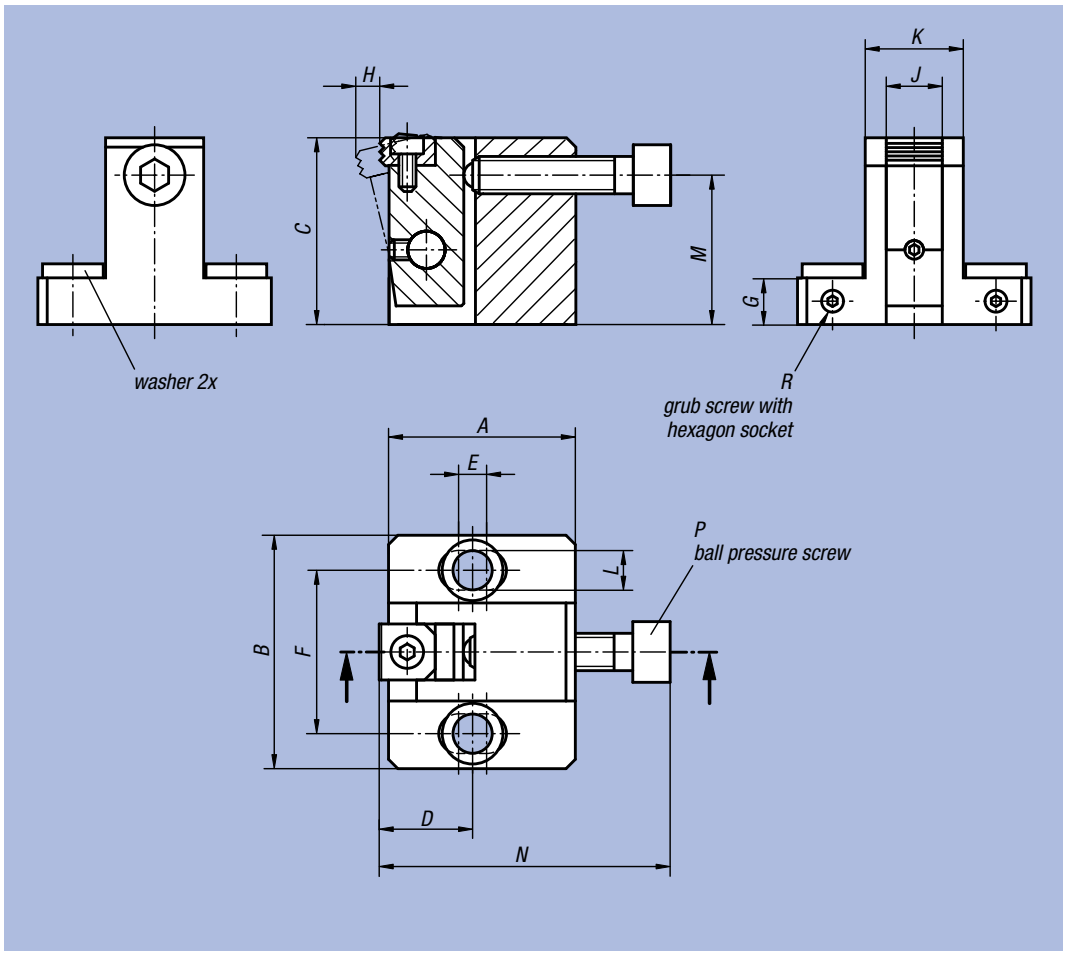

Order No.	A	B	C	D	E	F	G	H	J	K	L	M	N	P	R	Clamping force N	Tightening torque Nm	kg
04575-080400	40	50	40	20	6	35	10	5,3	12	21	8,5	32	62,5	M8x35	M4x10	11000	25	0,330
04575-100500	50	65	50	25	8	45	12	7,1	16	27	11	40	74	M10x40	M4x12	18000	50	0,660
04575-120600	60	70	60	30	10	50	15	8	20	31	13	48	91	M12x50	M5x15	25000	90	1,060
04575-160800	80	90	80	40	15	65	20	10,2	25	39	17	64	115	M16x60	M6x20	46000	200	2,380

Side Clamps



Material, surface finish:
Base body in tempered steel, black oxide finish;
arm in tempered steel, heat-treated and black oxide finish;
jaw in hardened tool steel, heat-treated and black oxide finish

Sample order:
nlm 04578-080400

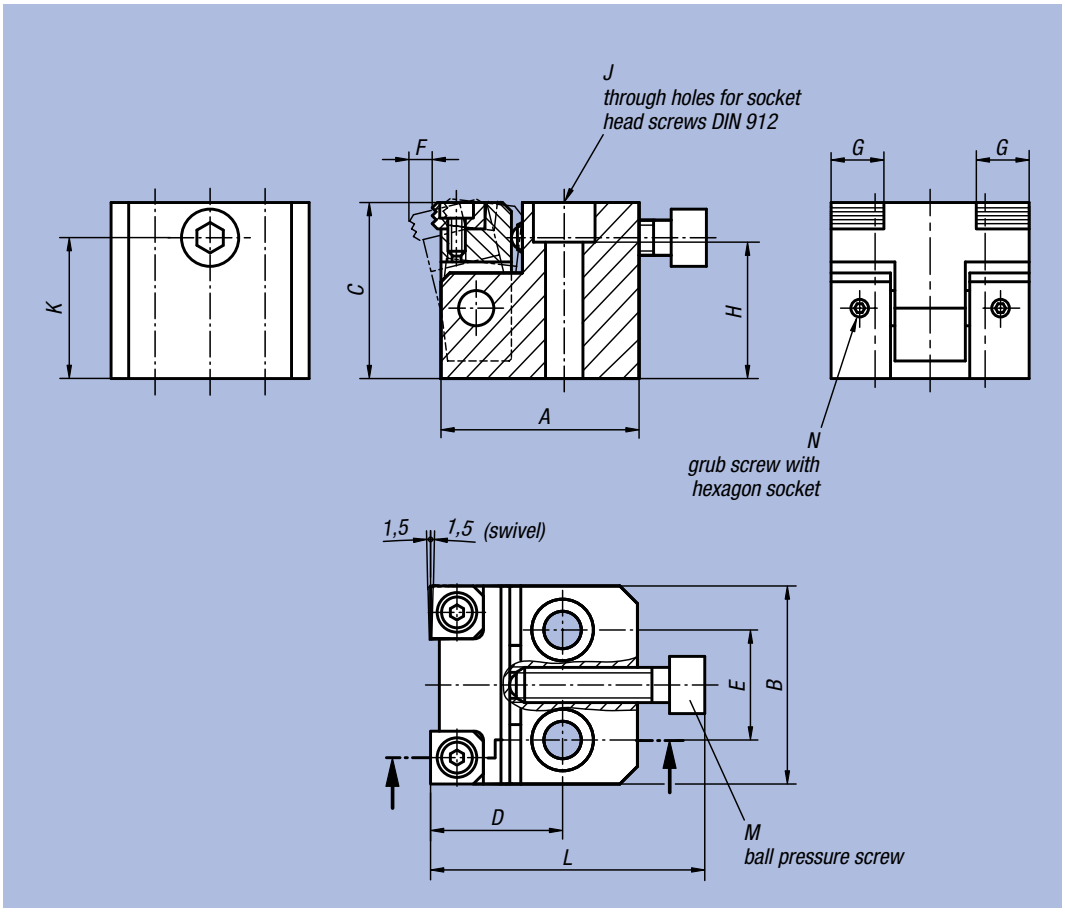

Order No.	A	B	C	D	E	F	G	H	J	K	L	M	N	Clamping force N	Tightening torque Nm	kg
04578-080400	45	45	40	30	25	5,3	12	31	M8	32	62,5	M8x35	M4x4	11000	25	0,550
04578-100500	55	55	50	40	30	7,1	16	39	M10	40	74	M10x40	M4x4	18000	50	1,000
04578-120600	65	65	60	45	35	8	20	47	M12	48	91	M12x50	M5x5	25000	90	1,690

Swivelling retainer, mini

with cam lever



Material:
Tempered steel
Surface finish:
Heat-treated and black oxide finish
Sample order:
nlm 04610-100
Note:
Swing clamps are used if torsion points must be free in order to place and remove the workpiece.

* Admissible hand force to operate the handle.

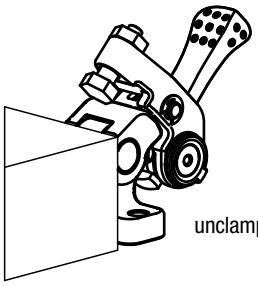

unclamped

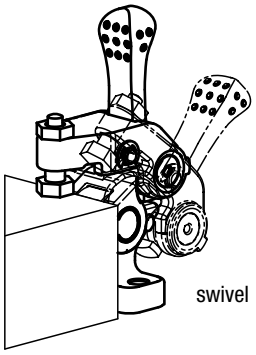

swivel

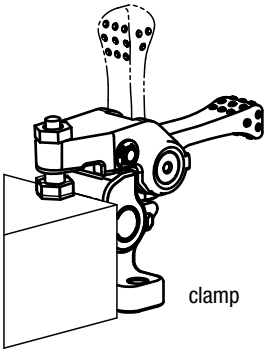

clamp

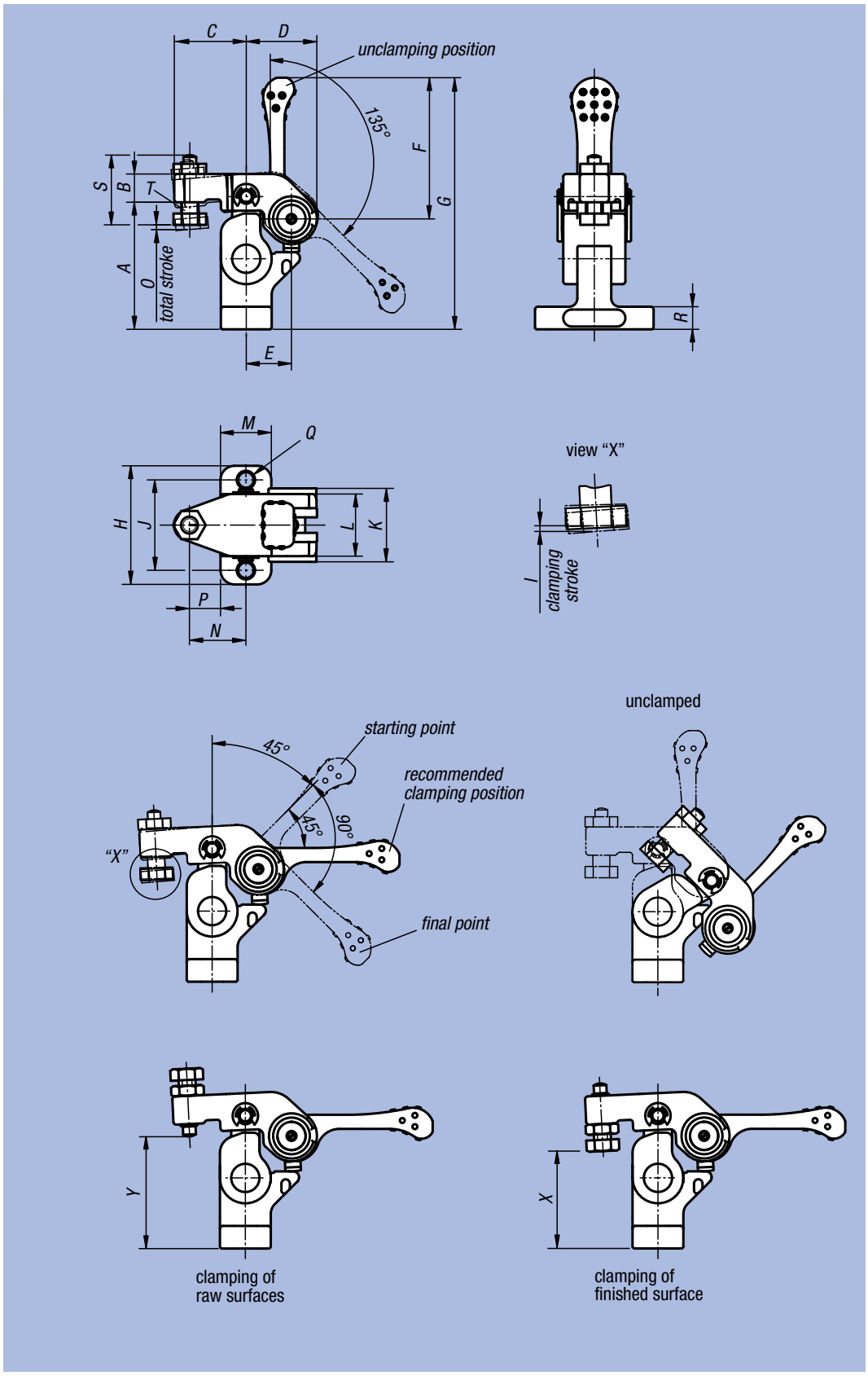

Order No.	A	B	C	D	E	F	G	H	I	J	K	L	M	N	O	P	Q	R	S	T	X min.	X max.	Y min.	Y max.	Clamping force N	Hand force N	kg
04610-100	45	10	25,5	25	16	50	89	42	1	32	26	22	18	20	1,5	11	5,5	8	24	M6	31,5	40,5	34,5	43,5	700	100*	0,244
04610-150	55	12	32	31	20	63	109	52	1,2	40	32	28	22	25	1,8	14	6,6	10	30,5	M8	36,4	48,6	41,4	53,6	1100	150*	0,468

Flange Clamp



Material:
Steel

Surface finish:
Case-hardened, black oxide finish and ground

Sample order:
nlm 04620-23

Note:
The clamping heights can be enlarged by Joint Bars 04378 and reduced by Toggle Locators 02000 in the case of 04620-12 to 04620-14 as well as 04620-22 to 04620-24.
The clamps have the following advantages:
- rapid clamping by hand via threaded spindle and helical spiral.
- quick and easy changing of the part for machining by pivoting the clamp away.
- compact design, therefore little space required for clamping.
- simple adaptation to even large clamping heights using the vertical cyliders.

The clamps can be affixed in two ways:
1) in a T-slot.
2) by the threaded pin M12 directly in the disc of a jig, for example.

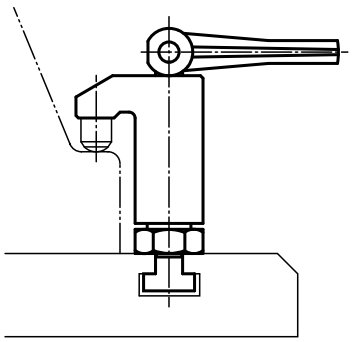

04620-11

Form A
with eccentric tension lever

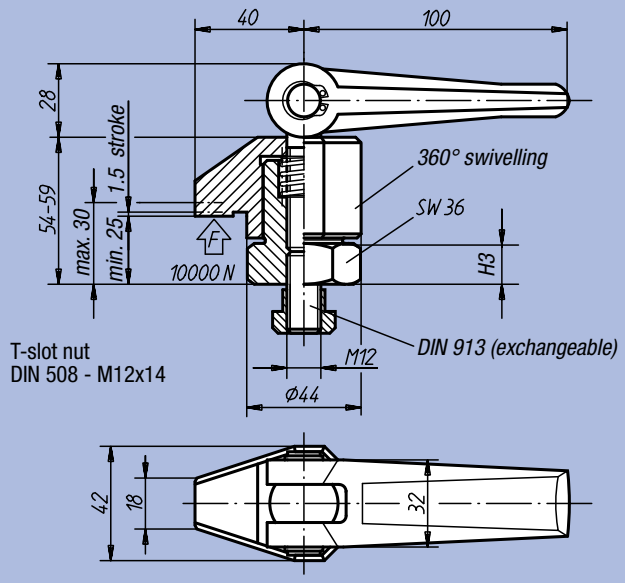

T-slot nut
DIN 508 - M12x14

04620-21

Form B
with clamping screw

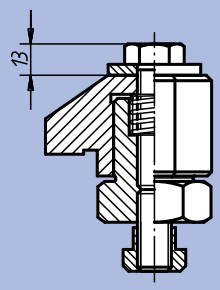

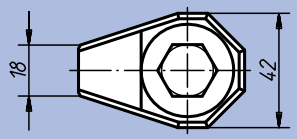

04620-12 up to 04620-14

Form A
with eccentric tension lever

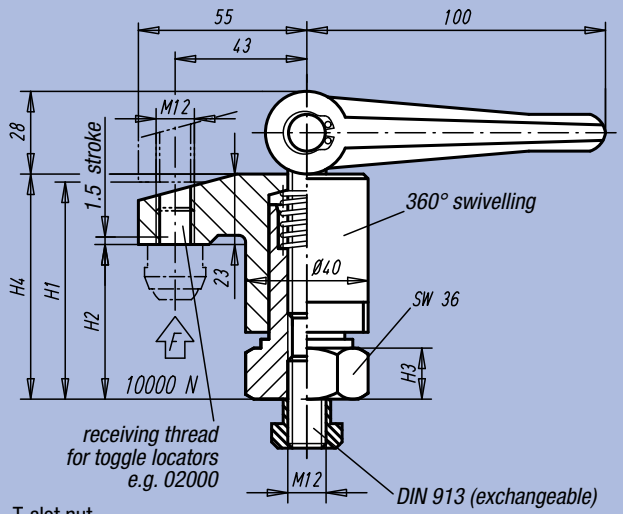

T-slot nut
DIN 508 - M12x14

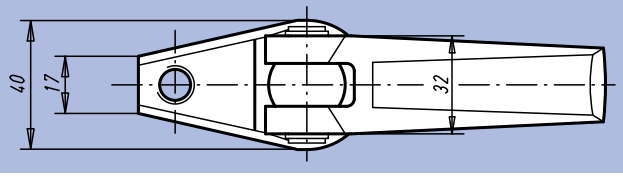

04620-22 up to 04620-24

Form B
with clamping screw

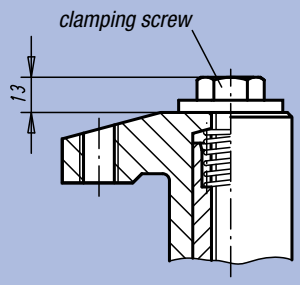

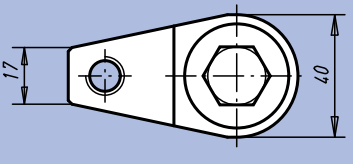

Order No. Form A	Order No. Form B	Clamping height max. H1	Clamping height min. H2	H3	H4
04620-11	04620-21	30	25	15	54-59
04620-12	04620-22	70	50	15	73-93
04620-13	04620-23	98	68	15	91-121
04620-14	04620-24	135	95	22	118-158

Compact Tightener



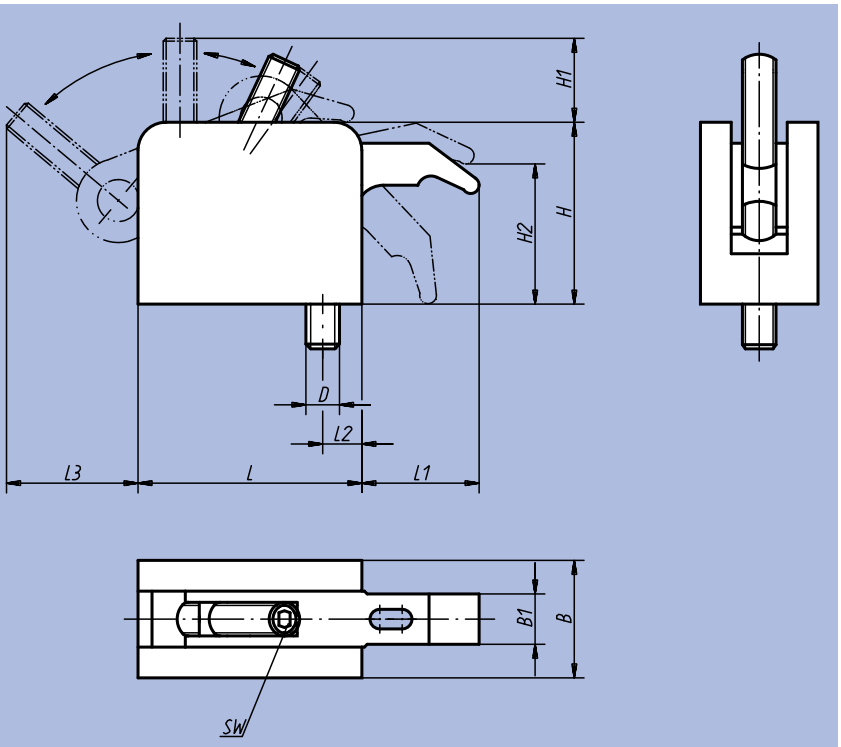

Material:
Casing: aluminium; clamping lever: hardened steel; clamping screw: quality class 10.9

Surface finish:
Casing: polished; tightening lever: ground and with black oxide finish

Sample order:
nlm 04625-108

Note:
The clamping arm of the Compact Tightener is fully retractable.
Technical benefits of the Compact Tightener:
- unhindered change of part for machining.
- infinitely variable range of adjustment.
- high self-limiting clamping force.
- variable height structure (vertical stands see 04626).
- high clamping force with no great strength required.
- clamp also suitable as stop.

On request:
Longer tightening arm (L1).

application example:

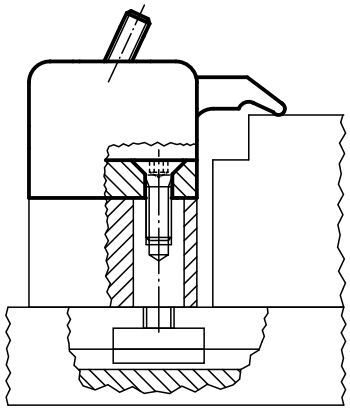

Order No.	Size	L	L1	L2	L3	B	B1	H	H1	H2	D	SW	Clamping force kN	kg
04625-106	1	53	27	11	29	32	11	43	17	30	M6	4	5	0,250
04625-108	1	53	27	11	29	32	11	43	17	30	M8	4	5	0,250
04625-210	2	80	40	17	45	42	18	65	30	50	M10	6	10	0,700
04625-212	2	80	40	17	45	42	18	65	30	50	M12	6	10	0,700
04625-312	3	107	53	22	57	53	25	87	32	67	M12	8	15	1,700

Vertical Stands

with tension bolt



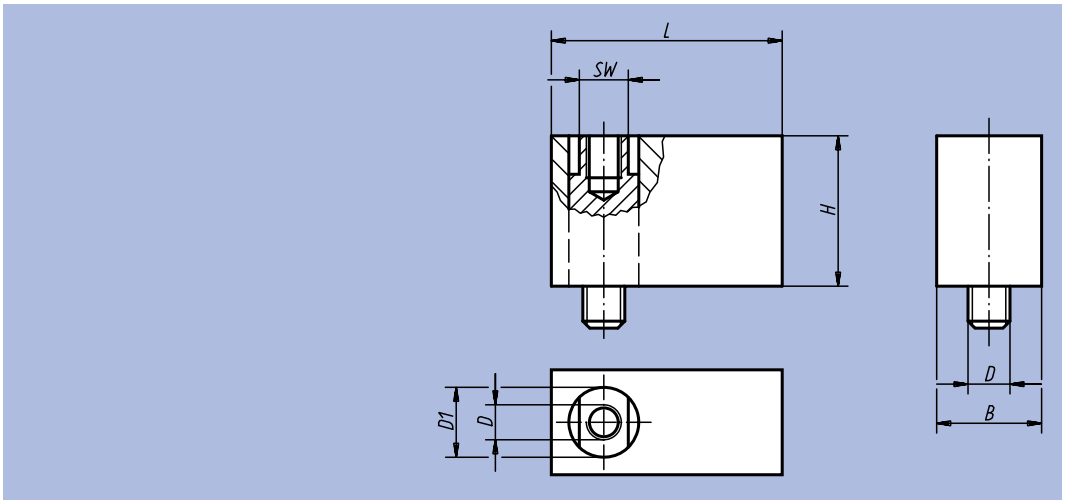

Material:
Vertical stand in aluminium;
tension bolt in steel

Surface finish:
Vertical stand: polished;
tension bolt: black oxide finish

Sample order:
nlm 04626-108

Note:
The vertical stand is used as a height-adjusting element for the compact tightener (04625).

Order No.	Size	L	B	H	D	D1	SW	kg
04626-106	1	53	32	30	M6	15	13	0,160
04626-108	1	53	32	30	M8	15	13	0,160
04626-210	2	80	42	50	M10	25	19	0,550
04626-212	2	80	42	50	M12	25	19	0,550
04626-312	3	107	53	67	M12	30	24	1,250

Notes:

Tightening Nuts



Material:
Housing in tempered steel;
cover in aluminium

Surface finish:
Carbonitrided

Sample order:
nlm 04750-6012

Note:
The main feature of the mechanical tightening nut is an integrated planetary gear to simplify the manual clamping torque. After manually adjusting the tightening nut up to the clamp, the drive groove of the planetary gear is engaged by turning the operating hexagon “SW1“ to the right. The tightening nut is self-limiting in every clamping position. The tightening nut can be used for many clamping tasks in mechanical engineering, especially for clamping parts for pressing and stamping. Suitable bolts for T-slots see 07040.

The tightening nuts are supplied without bolts for T-slots.

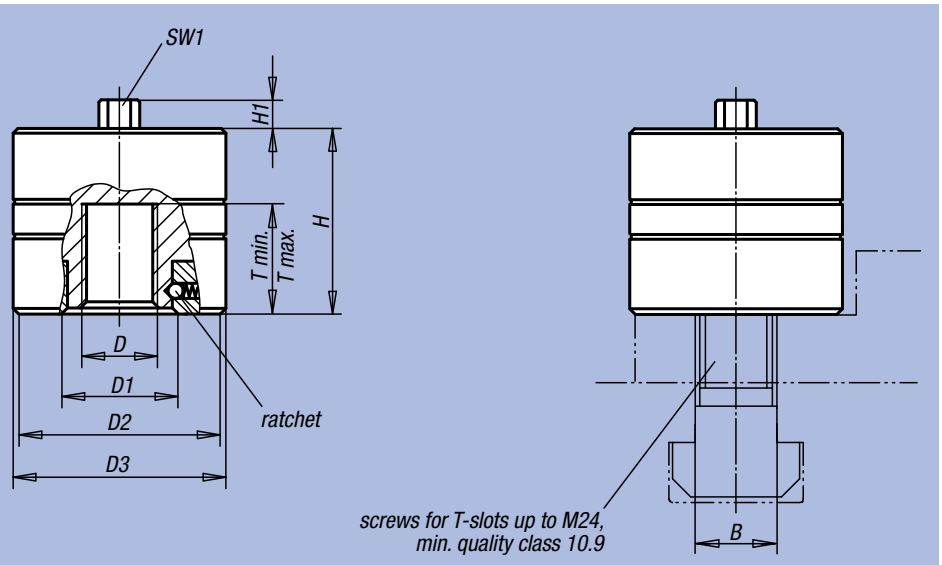

Tightening nut for clamping of chain wheels during milling



Order No.	D	D1	D2	D3	H	H1	T min.	T max.	B	SW1	Clamping force max. kN	Max. static stress kN	Tightening torque max. Nm	□ kg
04750-6012	M12	32	60	62	50	10	16	24	14	13	60	70	20	0,900
04750-6016	M16	32	60	62	50	10	16	24	18	13	60	120	25	0,900
04750-6020	M20	32	60	62	50	10	16	24	22	13	60	120	30	0,900
04750-10016	M16	42	71	73	70	10	25	35	18	15	100	130	35	1,800
04750-10020	M20	42	71	73	70	10	25	35	22	15	100	200	40	1,800
04750-10024	M24	42	71	73	70	10	25	35	28	15	100	200	45	1,800

Tightening Nuts

with star or T-grip



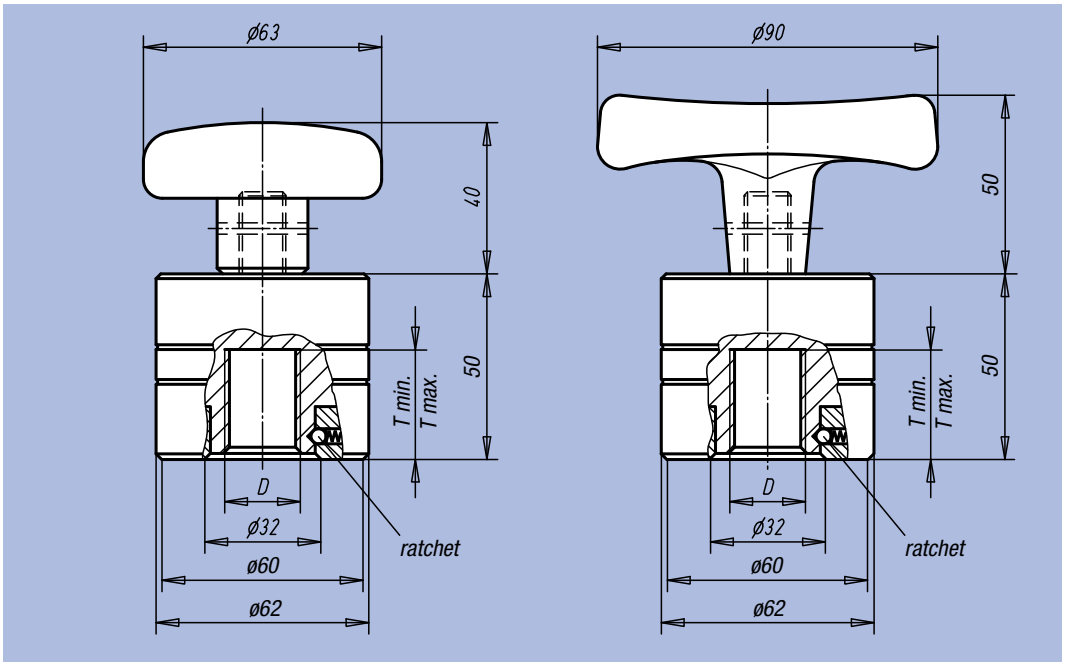

Material:
Housing in tempered steel; cover in aluminium; star grip in thermoplastic; T-grip in duroplastic

Surface finish:
Carbonitrided; star and T-shaped grips: black

Sample order:
nlm 04751-4010

Note:
The tightening nut with star or T-grip are an improvement based on the tried and tested tightening nut 04750. A star or T-grip replaces the operating hexagon and an added mesh mechanism complements it. An integrated planetary gear serves as the force multiplier, the meshing mechanism triggers the automatic switch from the placing movement to the actual application of force. As a result, considerable clamping forces can be achieved with the simplest manual operation, with no additional ring or socket spanner. The robust construction and self-limiting function guarantee a high level of operating safety. Tightening nuts are used far beyond mechanical engineering for purposes in which high tension and clamping forces are required with the least possible expense. Tightening nuts are maintenance-free under normal operating conditions (max. 120 °C).

The threaded bolt must have a minimum quality class of 10.9. In the case of thread diameters of less than M16, threaded bolts (screws) with a quality class of 12.9 should be used or the maximum admissible static load must be reduced.

Vorteile:
- simple, manual operation.
- high tension forces due to force reinforcement.
- rapid adjustment due to automatic conversion.
- high-level operating safety due to self-limitation.

Order No.	Surface finish	D	T min.	T max.	Clamping force max. kN	Max. static stress kN	Tightening torque max. Nm	kg
04751-4010	Tightening nut with star grip	M10	16	24	40	50	15	1,000
04751-4012	Tightening nut with star grip	M12	16	24	40	70	15	1,000
04751-4016	Tightening nut with star grip	M16	16	24	40	120	15	1,000
04751-4020	Tightening nut with star grip	M20	16	24	40	120	15	1,000
04751-40102	Tightening nut with T-grip	M10	16	24	40	50	25	1,000
04751-40122	Tightening nut with T-grip	M12	16	24	40	70	25	1,000
04751-40162	Tightening nut with T-grip	M16	16	24	40	120	25	1,000
04751-40202	Tightening nut with T-grip	M20	16	24	40	120	25	1,000

Tightening Screws



Material:
Tempered steel
Surface finish:
Black oxide finish
Sample order:
nlm 04752-48
Note:
The tightening screws are fitted with a patented wedge clamping system. This system allows the greatest clamping forces to be achieved at low torques with a simple manual operation. The wedge clamping system is self-limiting in every clamping position. A longer path can be quickly traversed via the external thread of the tightening screw before the wedge clamping system (stroke up to 2.2 mm) is used for clamping. Tightening screws are used for many purposes, primarily in moulding, stamping machines and machine tools, as well as in the construction of jigs and fixtures and equipment manufacture.

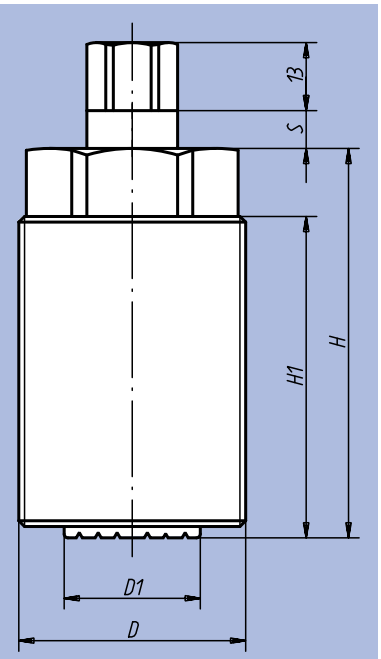

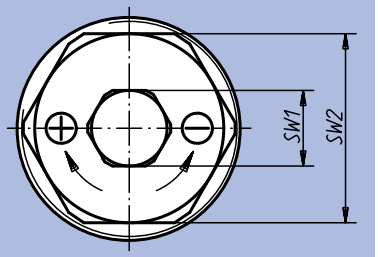

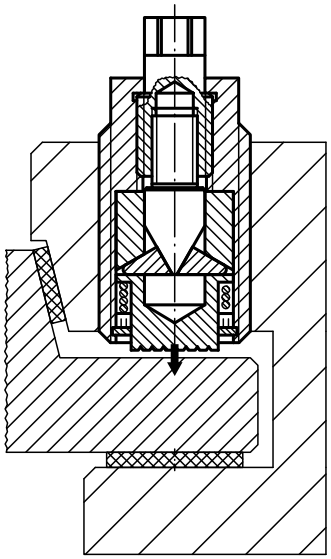

Clamping of turning tool on turning centre

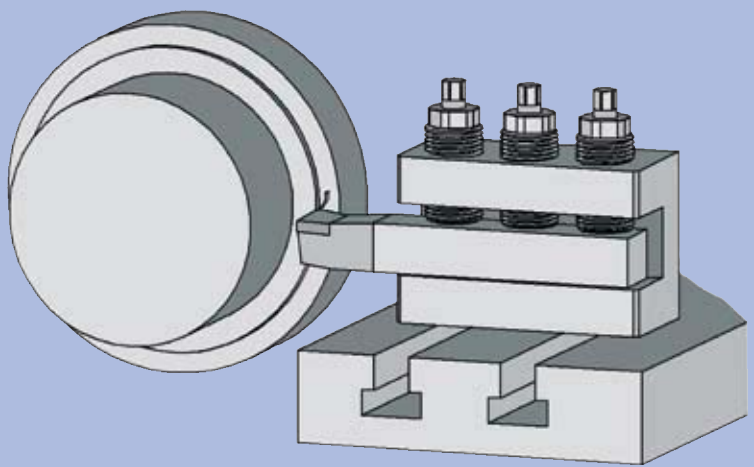

Order No.	D	D1	H	H1	S	SW1	SW2	max. clamping stroke	Nominal clamping force kN	Max. static stress kN	Max. tightening torque at SW1 Nm	kg
04752-36	M36x3	19	73	62	5	13	30	1,5	40	80	45	0,400
04752-48	M48x3	28	90	75	7,5	17	41	2,2	80	160	90	1,000

Notes:

05000

Quick Acting Clamps
Pneumatic Clamps
Fasteners



Quick-acting clamps

Quick clamps offer effective solutions if it is a matter of clamping or positioning a work piece economically and above all quickly.

Quick clamps work according to the knee-lever principle and can be operated with very little expenditure of force.

Locking or self-restriction is guaranteed if the dead centre position (alignment of the three points of the joint) is exceeded.

Quick clamps represent an optimal solution in drilling, welding, grinding and inspection jigs, etc. In the timber industry as well, extreme deformations are avoided by using quick clamps when bonding or building up fragile sheets, for example, because the clamping force is controllable.

Principle of the knee lever

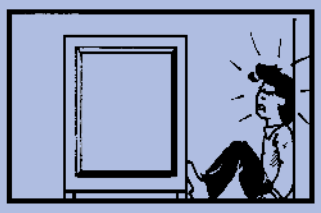

It is generally known that a person can support himself against a wall to shift a heavy piece of furniture. If the person has bent his knees and tries to move the furniture with the force of his legs, this is associated with the expenditure of considerable force.

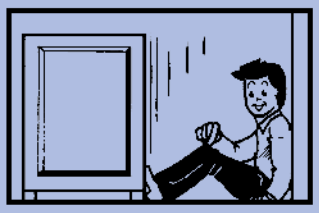

However, if the person has his legs in the position as shown in the picture above, and presses on the knee joint from above with a force, the move is much easier to achieve.

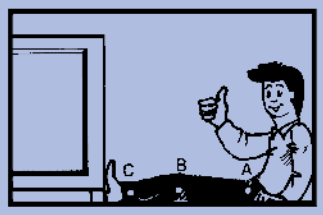

As soon as the 3 points of the joint A, B and C are in a line (knees straightened), it is no longer possible for the piece of furniture to be pressed back by a counterforce.

This principle is used with the quick clamps.

Operating method:

1. Position before clamping
2. Dead centre position (points of the joint in a line)
3. By exceeding the dead centre safe clamping is absolutely guaranteed (self-restriction)

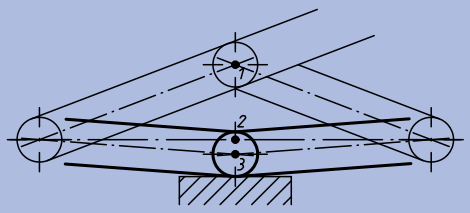

Calculating the clamping force

Calculation variables

A:	Distance between the centres (mm)
B:	Distance to the point of force application (mm)
D:	Diameter of the axle bolt (mm)
F_H:	Hand force (N)
F_1:	Force on the point of the joint (N)
F_{sp}:	Clamping force (N)
L_1, L_2:	Length of the lever arm (mm)
α:	Inclination angle of the lever (degrees)
β:	Friction angle in the joints (degrees)
δ:	Angle of repose at the connecting rod (degrees)
μ:	Coefficient of friction = 0,1 => δ 5,73°

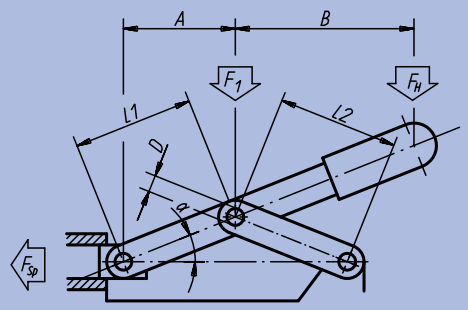

$$F_{sp} = \frac{F_1}{2} \left[\frac{1}{\tan(\alpha + \beta)} - \tan\delta \right]; \quad F_1 = \frac{F_H \cdot (A + B)}{A}; \quad \beta = \arcsin\left(\frac{2\,D}{L_1 + L_2} \cdot \mu \right)$$

Very high clamping forces can be achieved with the quick clamp. The full potential force cannot be used. Adhering to the holding forces F recommended in the catalogue, however, to guarantee a long life for the quick clamp.
Therefore the clamping force must be tuned to the retention force, which can be done by setting the pressure screw.

Vertical, quick-acting clamps

with horizontal foot



Material:
Hardened steel 1.0301

Surface finish:
Steel parts galvanised,
axial bolts tempered,
plastic handle oil-resistant

Sample order:
nlm 05020-08

Note:
See 05200 – 05280 for accessories.

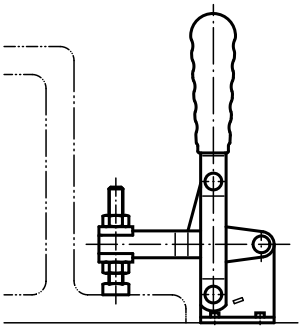

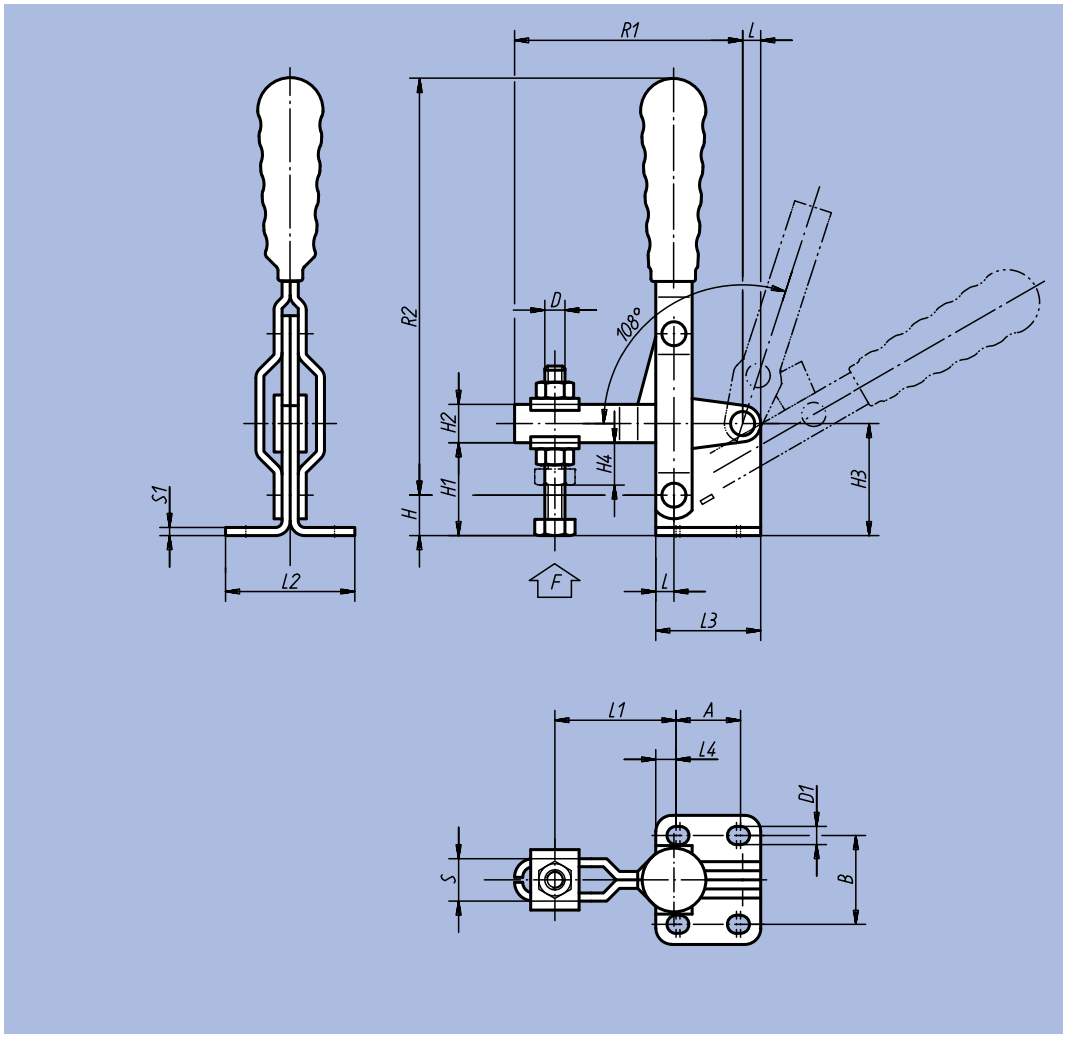

Order No.	L	L1 min.	L1 max.	L2	L3	L4	B	H	H1	H2	H3	H4	A min.	A max.	D	D1	R1	R2	S	S1	F kN	Plastic Grips	kg
05020-05	4,5	16	35	32	26	5	22	10	23	9,5	28	10	14	16	M5x35	4,5	56,5	96	10,5	2	0,8	05200-100	0,090
05020-06	5,5	23	46	38	32	9	27	13	29	11,5	35	11	12	14	M6x45	5,5	70,5	121	13,5	3	1	05200-105	0,200
05020-08	7	27	55	45	39	9	32	16	35	14	42	14	19	21	M8x50	6,5	86	143	16	3	2,3	05200-115	0,320
05020-10	8	33	74	56	43	7,5	38	20	39	18	48	18	26	28	M10x70	8,5	110	177	18	3,5	3,5	05200-120	0,450
05020-12	10	45	100	68	50	9	45	25	45	22	56	21	32	32	M12x80	8,5	140	215	23	4	4	05200-135	0,935

Vertical, quick-acting clamps

with horizontal foot and full clamping lever



Material:
Hardened steel 1.0301

Surface finish:
Steel parts galvanised,
axial bolts tempered,
plastic handle oil-resistant

Sample order:
nlm 05020-101

Note:
Bolts are not supplied.
See 05200 – 05280 for accessories.

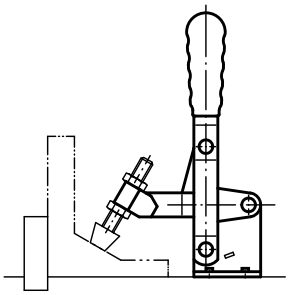

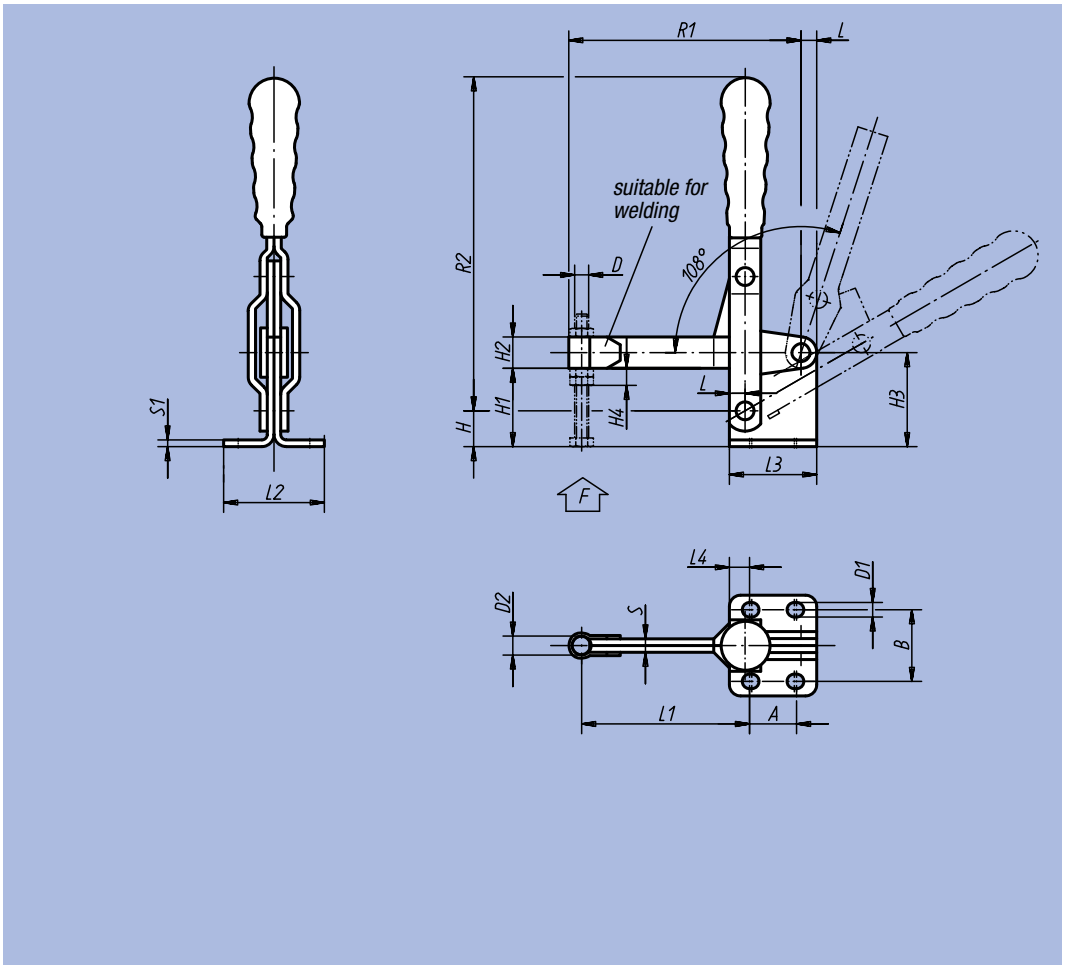

Order No.	L	L1	L2	L3	L4	B	H	H1	H2	H3	H4	A min.	A max.	D	D1	D2	R1	R2	S	S1	F kN	Plastic Grips	kg
05020-081	7	75	45	39	9	32	16	35	14	42	12	19	21	M8	6,5	8,5	103	143	6	3	2,2	05200-115	0,320
05020-101	8	92	56	43	7,5	38	20	39	18	48	16	26	28	M10	8,5	10,5	125	177	7	3,5	3,4	05200-120	0,450
05020-121	10	122	68	50	9	45	25	45	22	56	19	32	32	M12	8,5	12,5	159	215	8	4	4,5	05200-135	0,935

Vertical, quick-acting clamps

with horizontal foot and full clamping lever



Material:
Hardened steel 1.0301

Surface finish:
Steel parts galvanised,
axial bolts tempered,
plastic handle oil-resistant

Sample order:
nlm 05020-14

Note:
See 05200 – 05280 for accessories.

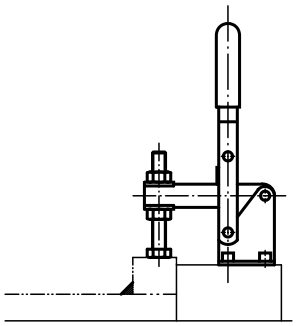

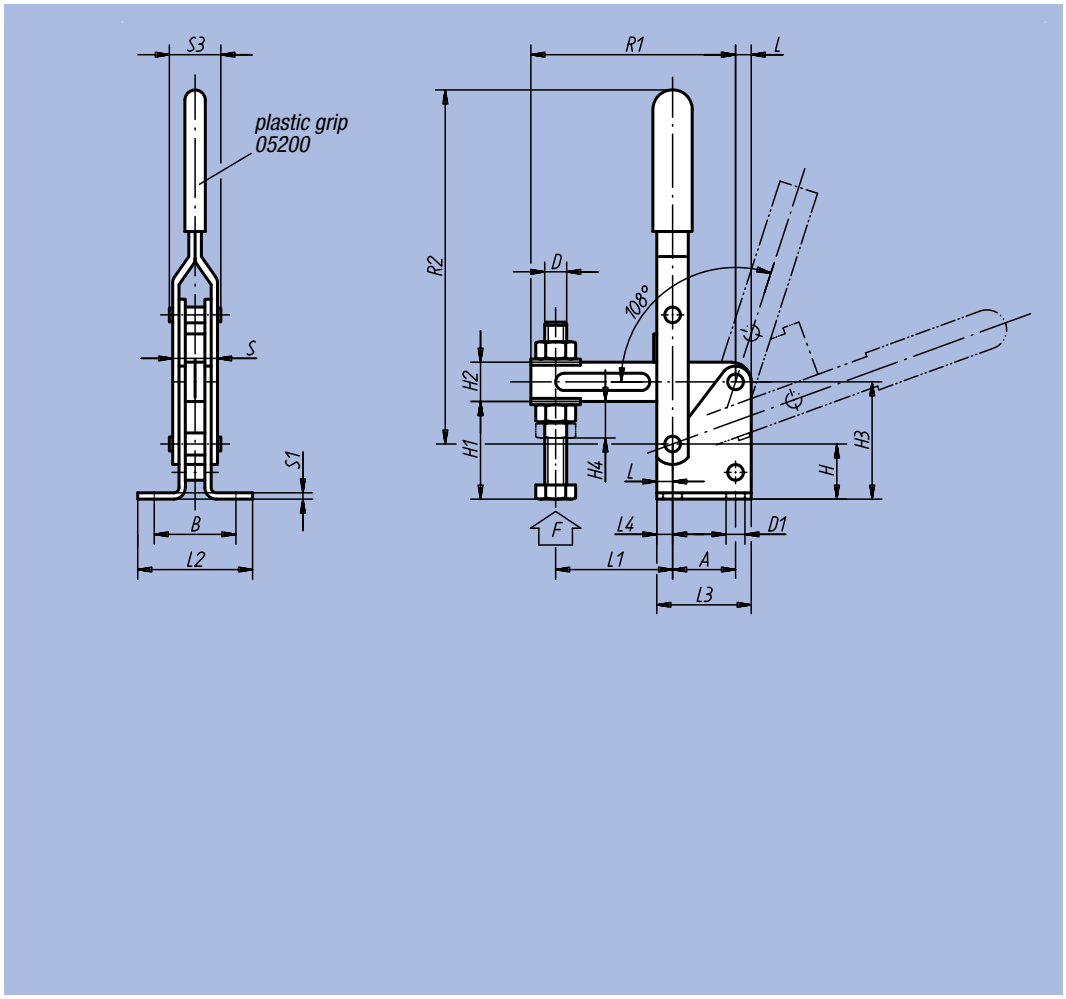

Order No.	L	L1 min.	L1 max.	L2	L3	L4	B	H	H1	H2	H3	H4	A	D	D1	R1	R2	S	S1	S3	F kN	Plastic Grips	kg
05020-14	10	50	165	73	60	10	52	35	62	25	75	23	40	M14x90	8,5	225	230	29	4	35	4,6	05200-135	1,300
05020-16	15	55	215	100	90	20	70	58	102	30	116	26	50	M16x140	12,5	300	305	35	4,5	45	6	05200-140	3,060

Vertical, quick-acting clamps

with straight foot



Material:
Hardened steel 1.0301

Surface finish:
Steel parts galvanised,
axial bolts tempered,
plastic handle oil-resistant

Sample order:
nlm 05040-12

Note:
See 05200 – 05280 for accessories.

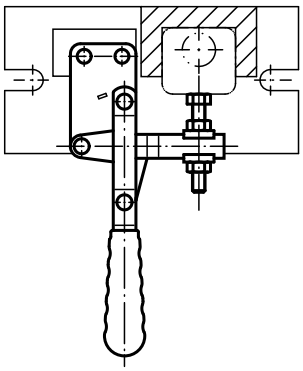

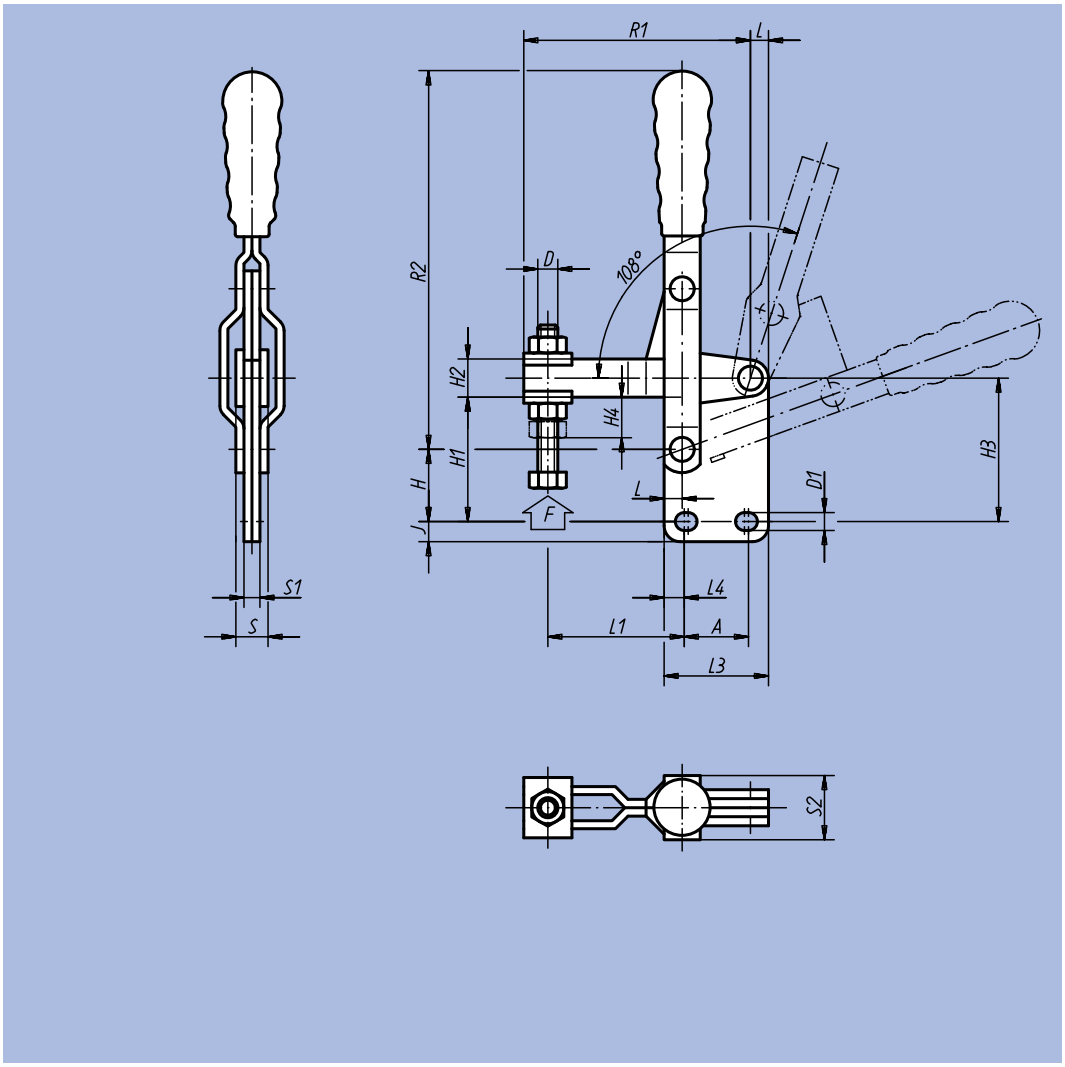

Order No.	L	L1 min.	L1 max.	L3	L4	H	H1	H2	H3	H4	A min.	A max.	D	D1	J	R1	R2	S	S1	S2	F kN	Plastic Grips	kg
05040-05	4,5	16	35	26	5	18	31	9,5	36	10	14	16	M5x35	4,5	5	56,5	96	10,5	4	16	0,8	05200-100	0,080
05040-06	5,5	23	46	32	9	21	37	11,5	43	11	12	14	M6x45	5,5	5,5	70,5	121	13,5	6	23	1	05200-105	0,100
05040-08	7	27	55	39	9	26,5	45,5	14	52,5	14	19	21	M8x50	6,5	6,5	86	143	16	6	23	2,3	05200-115	0,230
05040-10	8	33	74	43	7,5	33	52	18	61	18	26	28	M10x70	8,5	9	110	177	18	7	26	3,5	05200-120	0,350
05040-12	10	45	100	50	9	41	61	22	72	21	32	32	M12x80	8,5	11,5	140	215	23	8	30	4,6	05200-135	0,460

Vertical, quick-acting clamps

with straight foot and full clamping lever



Material:
Hardened steel 1.0301

Surface finish:
Steel parts galvanised,
axial bolts tempered,
plastic handle oil-resistant

Sample order:
nlm 05040-121

Note:
Bolts are not supplied.
See 05200 – 05280 for accessories.

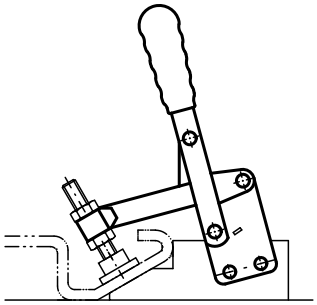

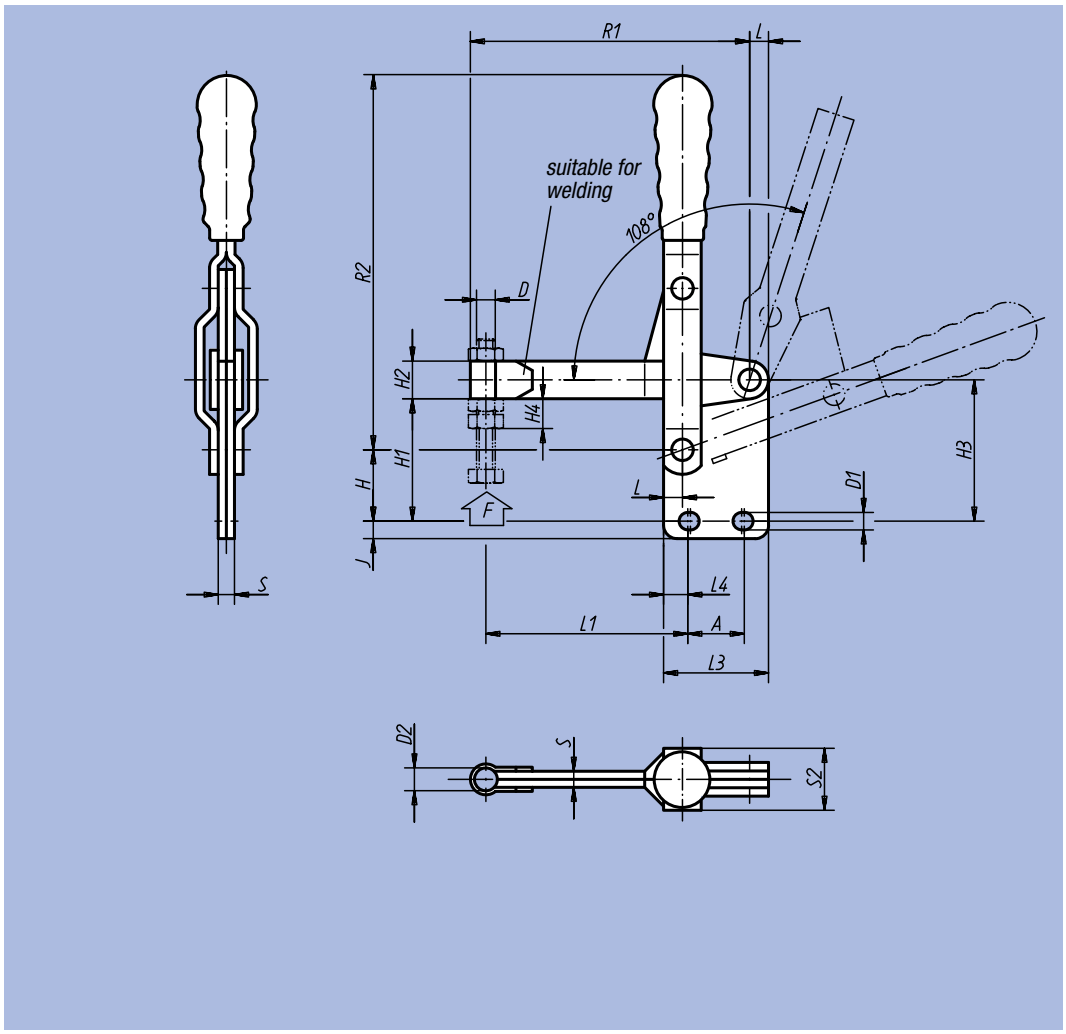

Order No.	L	L1	L3	L4	H	H1	H2	H3	H4	A min.	A max.	D	D1	D2	J	R1	R2	S	S2	F kN	Plastic Grips	kg
05040-081	7	75	39	9	26,5	45,5	14	52,5	12	19	21	M8	7	8,5	6,5	103	143	6	23	2,2	05200-115	0,320
05040-101	8	92	43	7,5	33	52	18	61	16	26	28	M10	8,5	10,5	9	125	177	7	26	3,4	05200-120	0,450
05040-121	10	122	50	9	41	61	22	72	19	32	32	M12	8,5	12,5	11,5	159	215	8	30	4,5	05200-135	0,935

Vertical, quick-acting clamps

with angled foot



Material:
Hardened steel 1.0301

Surface finish:
Steel parts galvanised,
axial bolts tempered,
plastic handle oil-resistant

Sample order:
nlm 05060-06

Note:
See 05200 – 05280 for accessories.

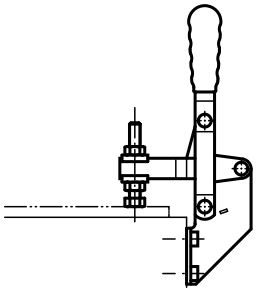

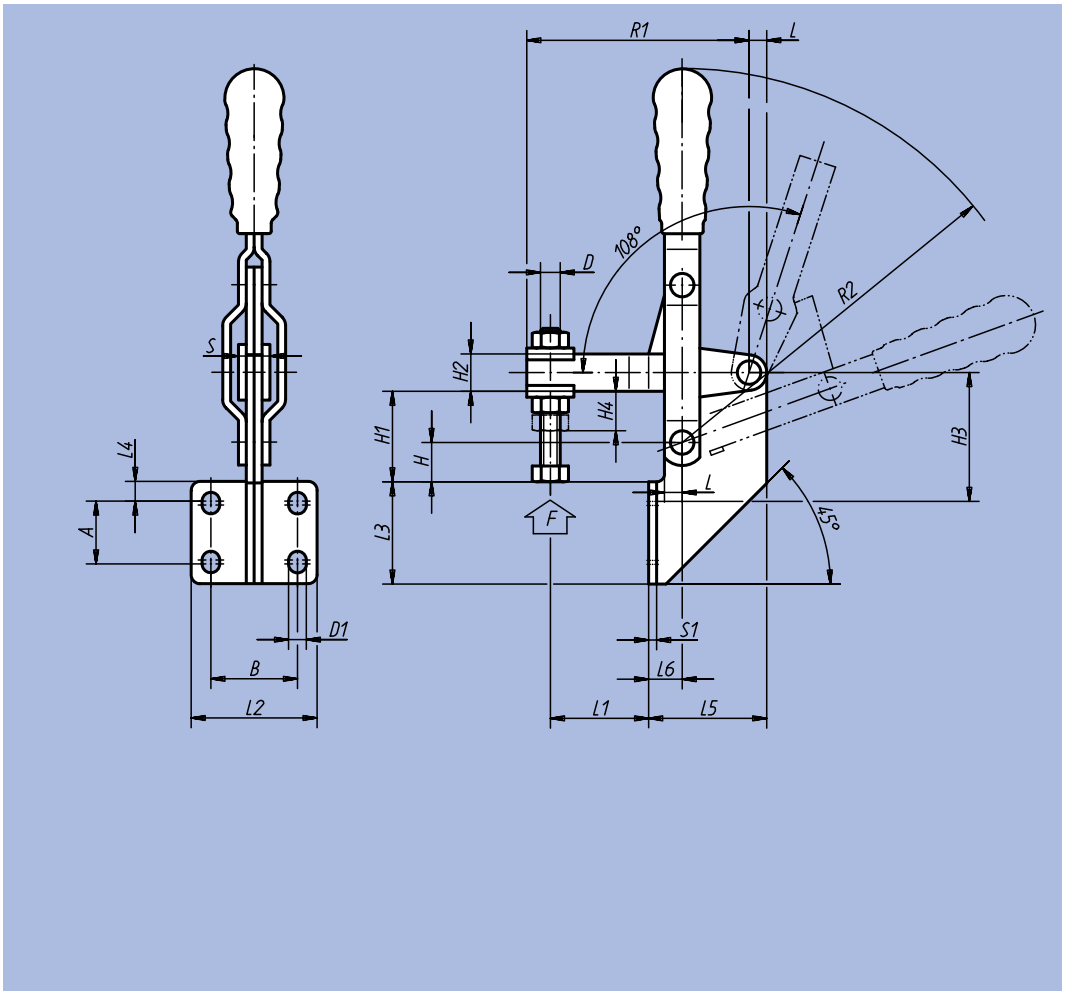

Order No.	L	L1 min.	L1 max.	L2	L3	L4	L5	L6	B	H	H1	H2	H3	H4	A min.	A max.	D	D1	R1	R2	S	S1	F kN	Plastic Grips	kg
05060-05	4,5	7	26	32	26	5	30	8,5	22	10	23	9,5	33	10	14	16	M5x35	4,5	56,5	96	10,5	2	0,8	05200-100	0,110
05060-06	5,5	8	31	38	32	9	38	11,5	27	13	29	11,5	44	11	12	14	M6x45	5,5	70,5	121	13,5	3	1	05200-105	0,240
05060-08	7	12	40	45	39	9	45	13	32	16	35	14	51	14	19	21	M8x50	6,5	86	151	16	3	2,3	05200-115	0,390
05060-10	8	18,5	59,5	56	43	7,5	50	15	38	20	39	18	55,5	18	26	28	M10x70	8,5	110	177	18	3,5	3,5	05200-120	0,545

Hook Clamps

with latch bracket



Material:
Lever, foot and brace: 1.0301 case-hardened steel;
axial bolts and hooks: 1.0501 tempered steel

Surface finish:
Steel parts galvanised,
axial bolts and hooks tempered,
plastic handle oil-resistant

Sample order:
nlm 05080-01 (Hook Clamp)
nlm 05080-011 (Latch bracket)

Note:
The hook clamp has to be rotated in order to change the position of the base plate.

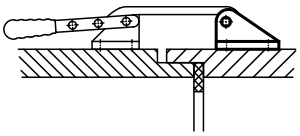

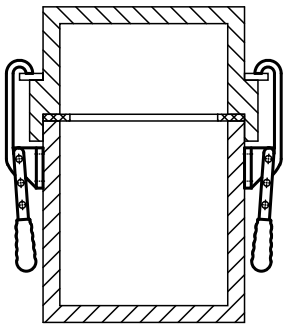

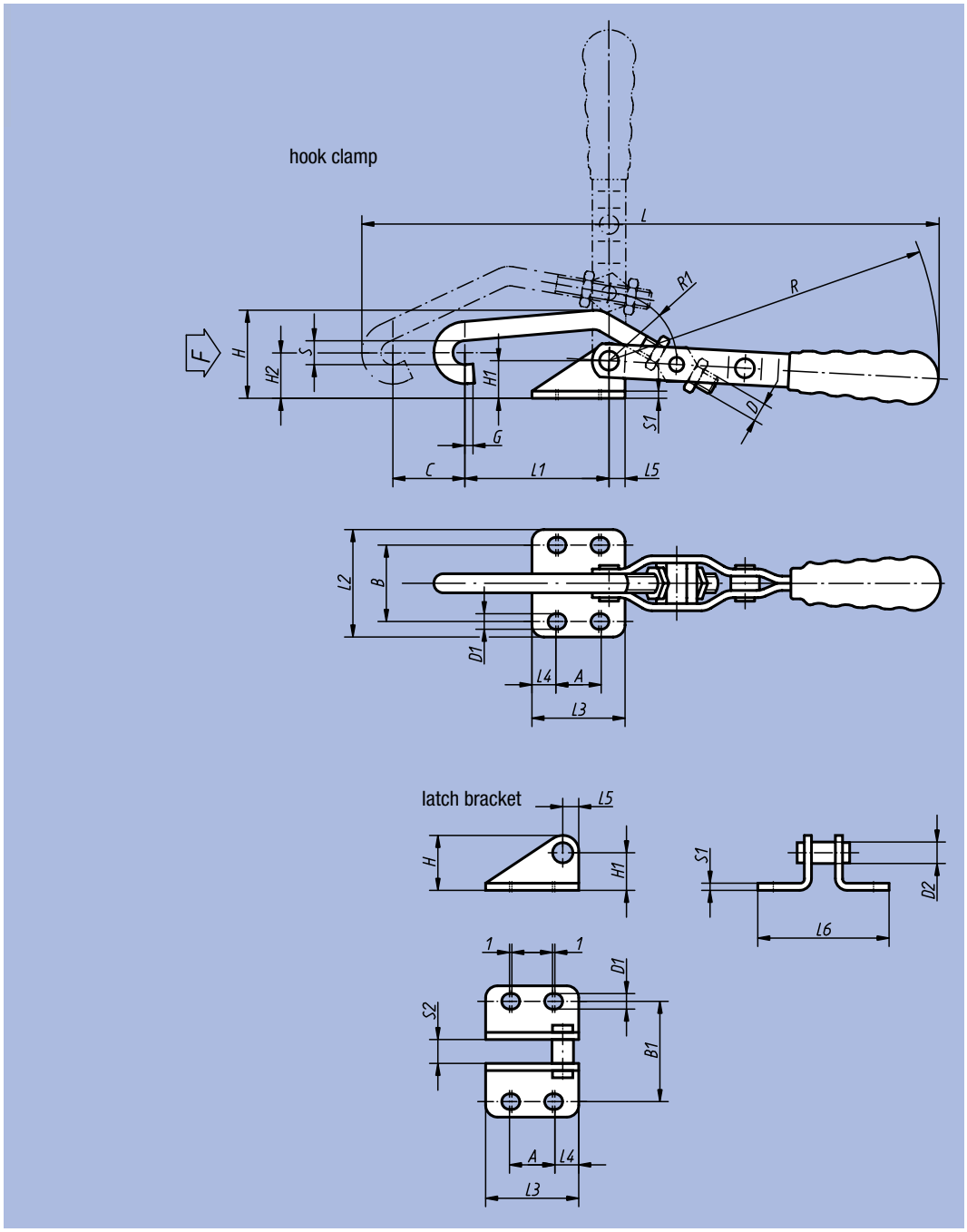

Hook Clamps

Order No.	L	L1	L2	L3	L4	L5	B	H	H1	H2	A min.	A max.	C	D	D1	G	R	R1	S	S1	F kN	Plastic Grips	kg
05080-01	231	60	45	39	10	7	32	36	16	17	17	19	25	M8	6,5	3	151	29	10	3	1	05200-115	0,230
05080-03	349	90	68	50	9	10	45	64	30	31	30	32	30	M12	8,5	5	215	36,5	14	4	3	05200-135	0,500

Latch bracket

Order No.	L3	L4	L5	L6	B1	H	H1	A min.	A max.	D1	D2	S1	S2	kg
05080-011	39	10	7	55	42	23	16	17	19	6,5	9	3	10	0,090
05080-031	50	9	10	82	59	40	30	30	32	8,5	13	4	14	0,120

Horizontal, quick-acting clamps

with horizontal foot



Material:
Hardened steel 1.0301

Surface finish:
Steel parts galvanised,
axial bolts tempered,
plastic handle oil-resistant

Sample order:
nlm 05120-10

Note:
See 05200 – 05280 for accessories.

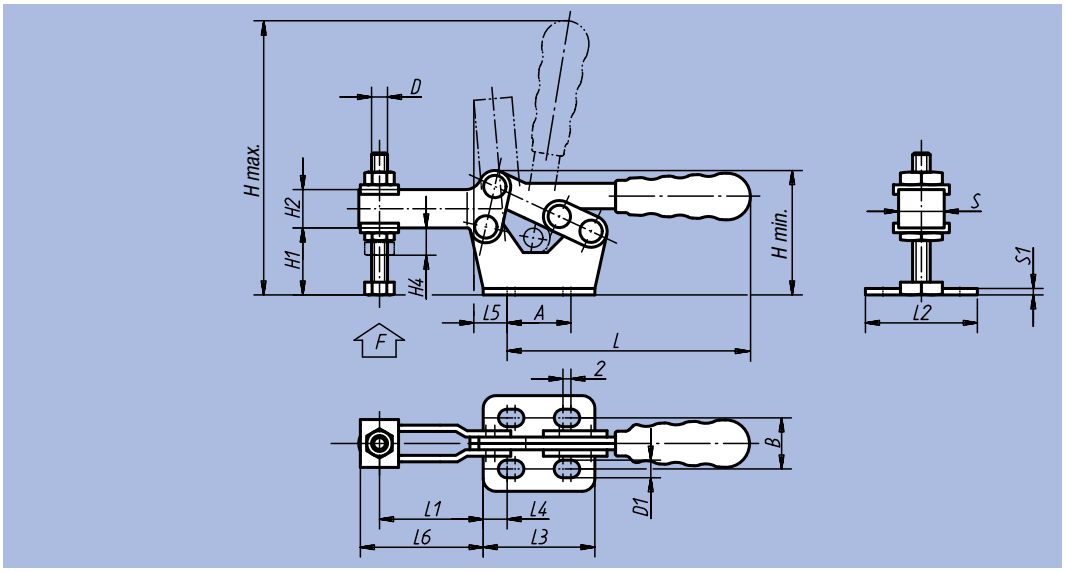

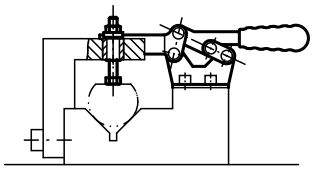

Order No.	L	L1 min.	L1 max.	L2	L3	L4	L5	L6	B	H min.	H max.	H1	H2	H4	A min.	A max.	D	D1	S	S1	F kN	Plastic Grips	kg
05120-05	76	12	32,5	30	35	7,5	9,5	39	16	39	91	20	12	10	16	20	M5x35	5,5	11	2	0,8	05200-200	0,095
05120-06	106	15,5	46	35,5	45	8,5	11,5	53,5	22	53	130	30	14	11	24	28	M6x48	5,5	14	3	1	05200-205	0,200
05120-08	140	19,5	61	40,5	55,5	14	19	71	24	67	165	40	16	14	24	28	M8x60	7	16	3	2,3	05200-210	0,360
05120-10	172	33	84	61	65,5	10,5	20	96,5	42	85	200	50	20	18	40	44	M10x70	9	19	3,5	3,5	05200-215	0,510
05120-12	215	31	104	64,5	80	18,5	25,5	119	42	99	250	60	24	21	40	44	M12x80	9	22	4	4,6	05200-220	0,790

nlm 05120

Horizontal, quick-acting clamps

large model



Material:
Hardened steel 1.0301

Surface finish:
Steel parts galvanised,
axial bolts tempered,
plastic handle oil-resistant

Sample order:
nlm 05120-14

Note:
See 05200 – 05280 for accessories.

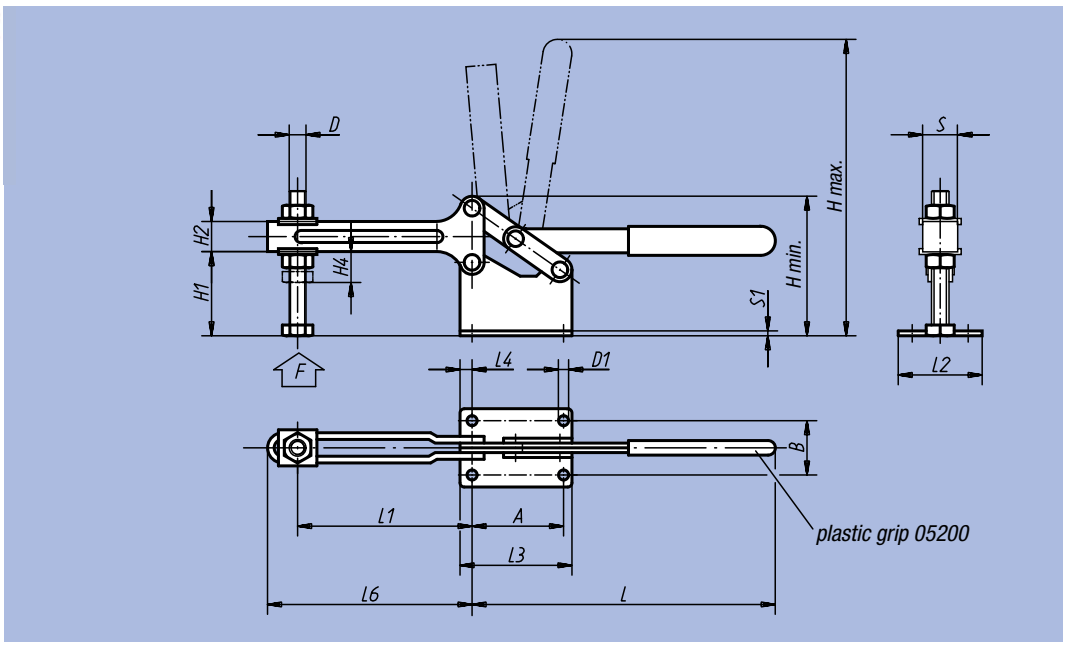

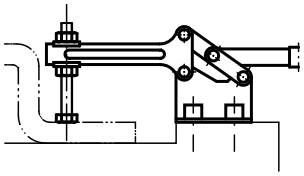

Order No.	L	L1 min.	L1 max.	L2	L3	L4	L6	B	H min.	H max.	H1	H2	H4	A	D	D1	S	S1	F kN	Plastic Grips	kg
05120-14	252	45	145	65	96	10	160	45	116	306	70	25	23	76	M14x90	9	24	4	4,5	05200-145	1,460
05120-16	325	55	205	85	132	15	225	55	175	420	109	35	26	102	M16x140	12,5	39	5	6	05200-140	3,510

Horizontal, quick-acting clamps

with straight foot



Material:
Hardened steel 1.0301

Surface finish:
Steel parts galvanised,
axial bolts tempered,
plastic handle oil-resistant

Sample order:
nlm 05130-08

Note:
See 05200 – 05280 for accessories.

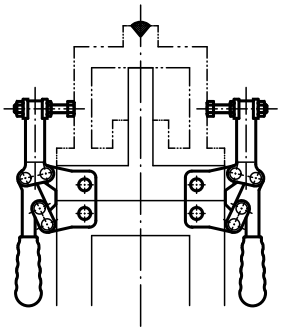

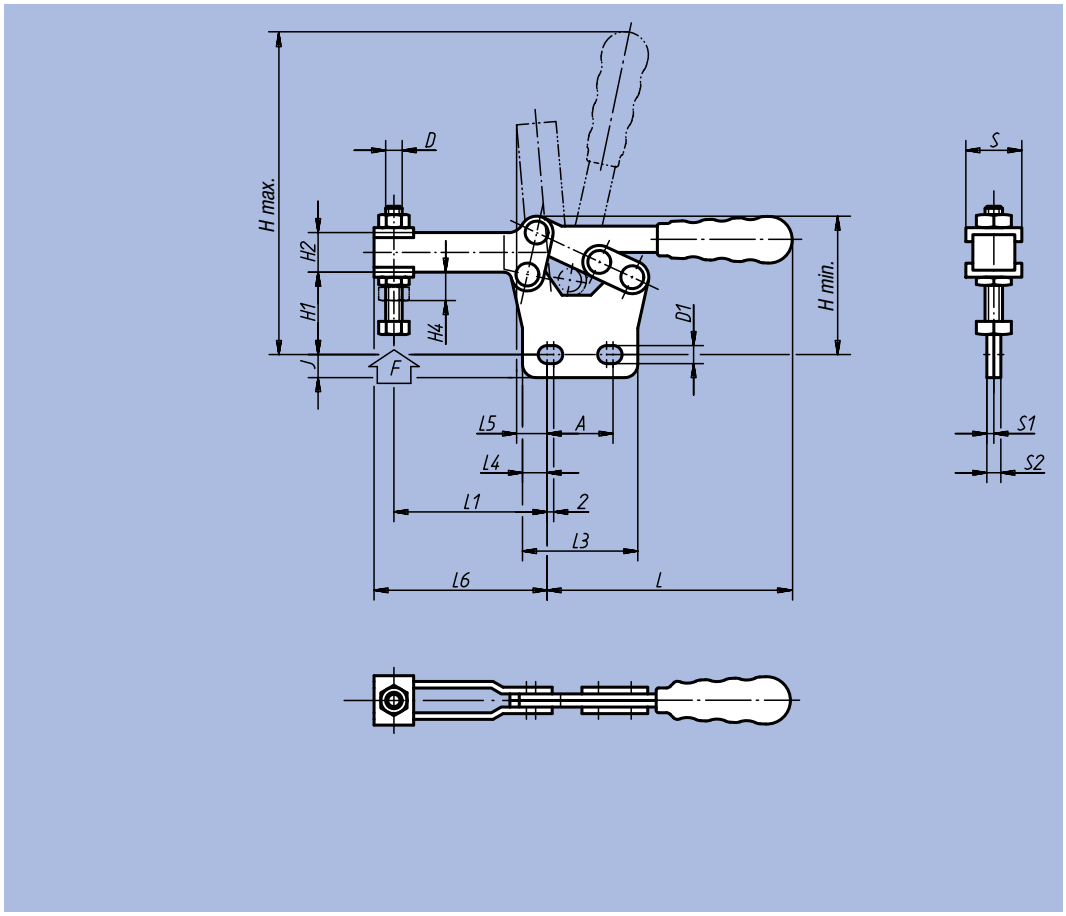

Order No.	L	L1 min.	L1 max.	L3	L4	L5	L6	H min.	H max.	H1	H2	H4	A min.	A max.	D	D1	J	S	S1	S2	F kN	Plastic Grips	kg
05130-05	76	18	39	35	7,5	10	44	42	93	25	12	10	16	20	M5x35	5,5	7	16	2	4	0,8	05200-200	0,095
05130-06	106	26	51	45	8,5	14	60	58	132	36	14	11	24	28	M6x48	5,5	6,5	19	3	6	1	05200-205	0,200
05130-08	140	34	74	55	13,5	20	82	74	168	44	16	14	24	28	M8x60	7	8	22	3	6	2,3	05200-210	0,360
05130-10	172,5	40	90	65	10,5	20,5	100	96	213	61	20	18	40	44	M10x70	9	9	26	3,5	7	3,5	05200-215	0,510
05130-12	215	54	113	80	18	29	130	112	270	70	24	21	40	44	M12x80	9	12	30	4	8	4,6	05200-220	0,790

Mini-Clamps



Material:
Stainless steel 1.4300

Surface finish:
Polished, handle with plastic coating: oil-resistant

Sample order:
nlm 05140-01

Note:
In the clamped state, the handle lies horizontally.

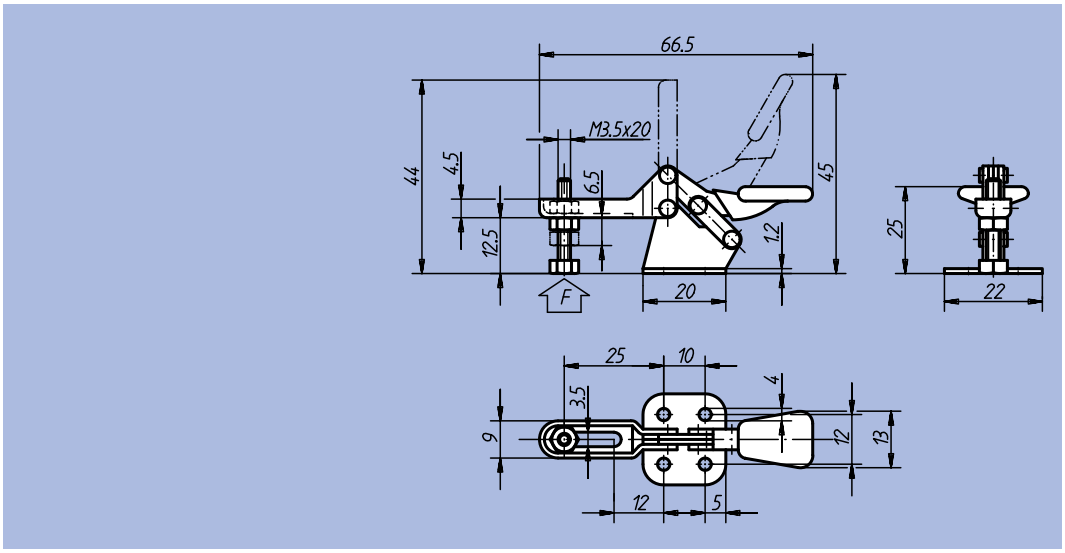

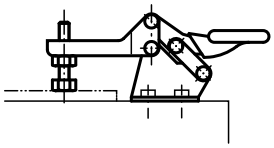

Order No.	F (N)	kg
05140-01	250	0,020

Horizontal, quick-acting clamps

with slide rod



Material:
Hardened steel 1.0301

Surface finish:
Steel parts galvanised, axial bolts tempered, plastic handle oil-resistant

Sample order:
nlm 05160-10

Note:
The 05160-06 and 05160-08 models have a swan-necked clamping lever. See 05200 – 05280 for accessories.

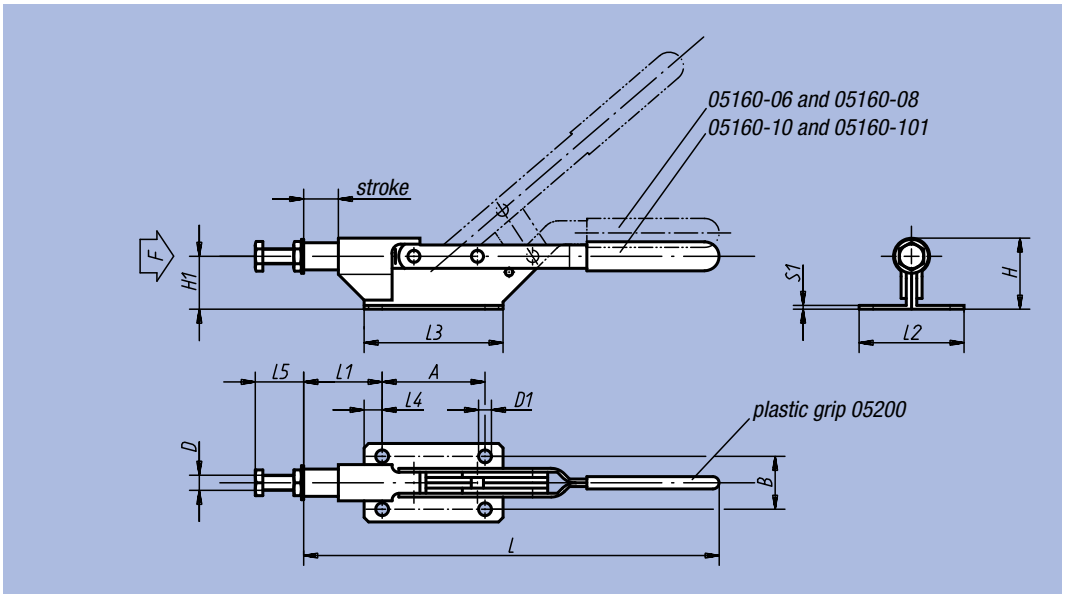

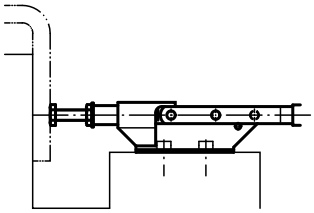

Order No.	L	L1	L2	L3	L4	L5 min.	L5 max.	B	H	H1	A	Stroke	D	D1	S1	F kN	Plastic Grips	kg
05160-06	178	37	40	75	10	13	23	28	33	24	55	15	M6	6	2	1	05200-110	0,300
05160-08	250	52	45	85	12,5	14	26	30	42	32	60	22	M8	6,5	2,5	2	05200-125	0,490
05160-10	273	52	52	92	12	25	35	35	47	35	68	22	M10	8,5	2,5	3	05200-125	0,600
05160-101	295	62	58	100	12,5	25	36	40	60	47,5	75	26	M10	8,5	3	4	05200-135	0,900

Quick-acting clamps with push-rod

for pressure and tension, console



Material:
Body and push-rod: 1.0501 tempered steel; levers: 1.0301 case-hardened steel

Surface finish:
Body and lever parts: galvanised; axial bolts: tempered; plastic handle: oil-resistant

Sample order:
nlm 05170-012 (Quick-acting clamp)
nlm 05170-110 (Console)

Note:
The clamp can be bolted into jigs with a mounting bracket or with its end thread.

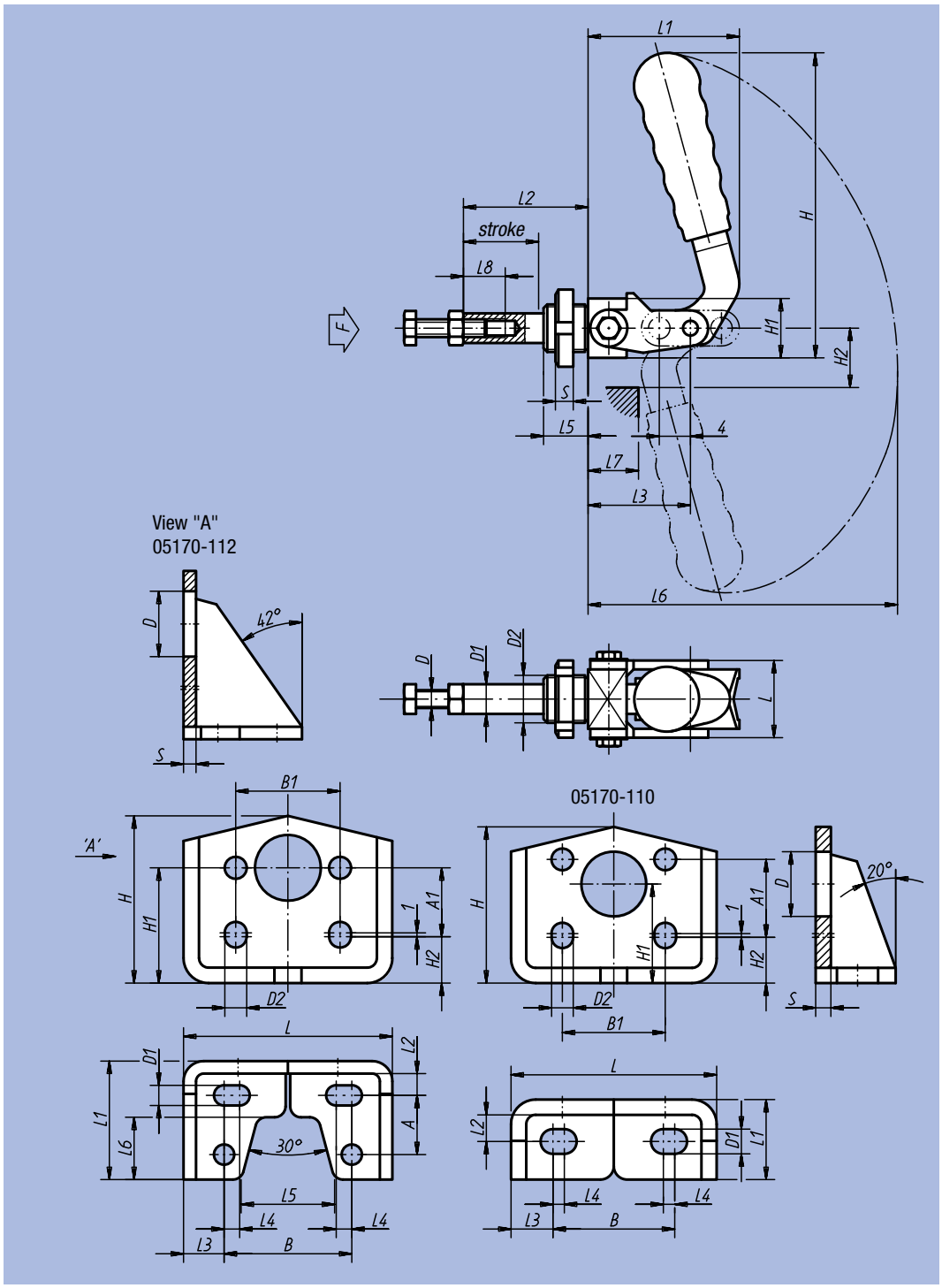

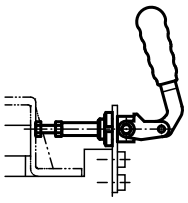

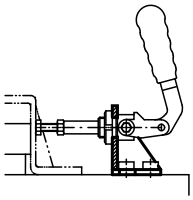

Quick-acting clamps

Order No.	L	L1	L2	L3	L4	L5	L6	L7	L8	H	H1	H2	D	D1	D2	Stroke	S	F kN	Plastic Grips	kg
05170-010	26	52	42	34	13	15	130	18	20	101	20	20	M6x30	10	M16x1,5	26	6	1	05200-205	0,200
05170-012	32	75	60	50	20	18	170	30	30	139	25	28	M8x40	12	M20x1,5	40	8	1,5	05200-120	0,420
05170-016	40	105	92	78	35	20	213	60	35	155	32	44	M10x50	16	M27x1,5	70	8	3,5	05200-135	0,850

Console

Order No.	L	L1	L2	L3	L4	L5	L6	B	B1	H	H1	H2	A	A1	D	D1	D2	S	corresponding quick-acting clamp	kg
05170-110	54	21	7	11	3	-	-	32	27	42,5	26	14	-	14	17	6,5	5,5	4	05170-010	0,100
05170-112	67	38	7	13	5	30	20	41	32	55	37	16	19	21	21	6,5	6,5	4	05170-012	0,210

Plastic Grips



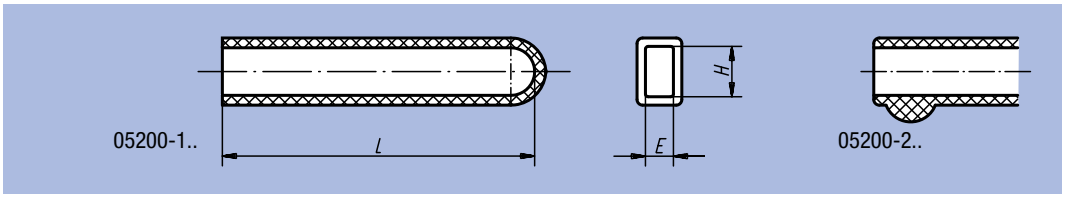

Material:
Plastic

Surface finish:
Oil-resistant

Sample order:
nlm 05200-130 (with boss)
nlm 05200-210 (without boss)

Order No.	L	H	E	corresponding quick-acting clamp	g
05200-100	33	9	4	05020-05 / 05040-05 / 05060-05	3
05200-105	43	11	6	05020-06 / 05040-06 / 05060-06	4
05200-110	55	12	5	05160-06	5
05200-115	55	14	6	05020-08 / 05020-081 / 05040-08 / 05040-081 / 05060-08 / 05080-01	6
05200-120	75	16	7	05020-10 / 05020-101 / 05040-10 / 05040-101 / 05060-10 / 05170-012	10
05200-125	90	16	4	05160-08 / 05160-10	12
05200-130	85	19	6	05160-101	15
05200-135	90	20	8	05020-12 / 05020-121 / 05020-14 / 05040-12 / 05040-121 / 05080-03 / 05160-101 / 05170-016	15
05200-140	115	30	9	05020-16 / 05120-16	35
05200-145	120	20	8	05120-14	30
05200-200	33	8	4	05120-05 / 05130-05	3
05200-205	48	12	6	05120-06 / 05130-06 / 05170-010	3
05200-210	65	14	6	05120-08 / 05130-08	5
05200-215	90	16	7	05120-10 / 05130-10	10
05200-220	120	20	8	05120-12 / 05130-12	20

Spring-mounted pressure spindles



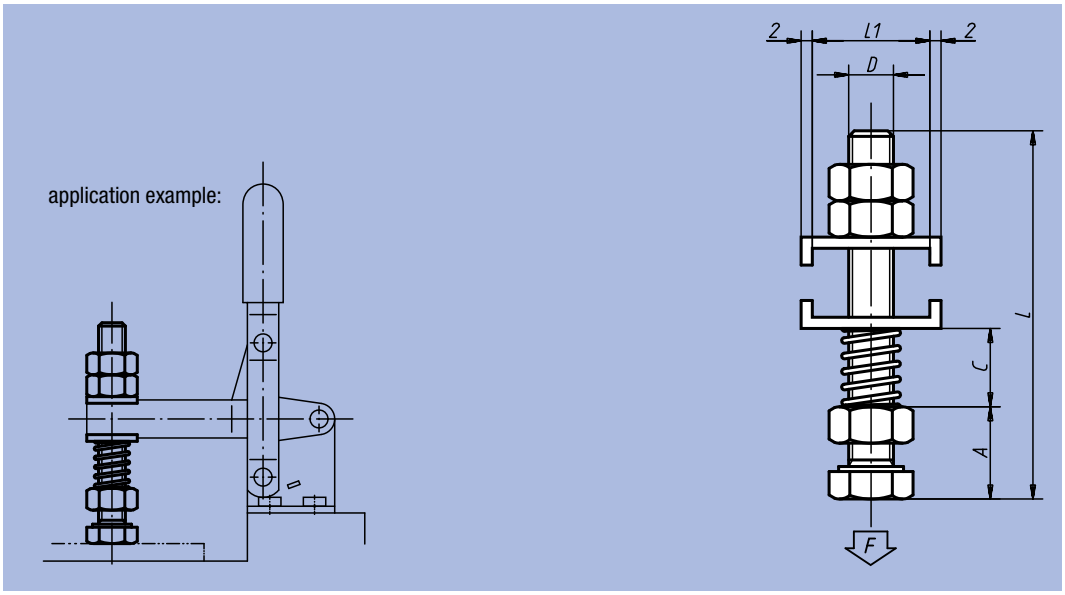

Material:
Bolts and nuts: tempered steel;
spring: spring wire class C

Sample order:
nlm 05220-10

Note:
For use with 05020, 05040, 05060, 05120 and 05130.

Order No.	L	L1	D	A	C min.	C max.	F max. N	kg
05220-08	65,5	16	M8x60	12	9	30	25	0,150
05220-10	87,5	20,5	M10x80	15	14	35	35	0,170

Pressure bolts

with thrust member



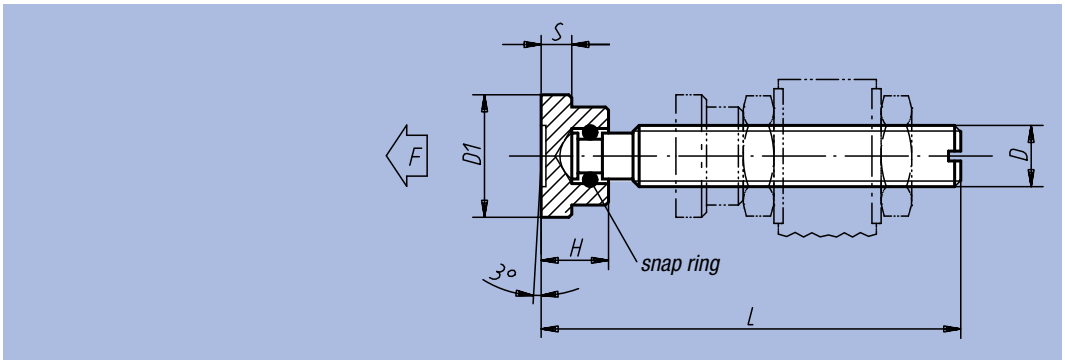

Material:
Bolt and thrust member:
free-cutting steel

Surface finish:
Bolt: black;
thrust member: black oxide finish;
bolt pin and thrust member: case-hardened

Sample order:
nlm 05240-10X63

Order No.	L	H	D	D1	S	F max. kN
05240-06X	32 / 37 / 42 / 52	7	M6	12	2,5	1
05240-08X	38 / 43 / 48 / 53 / 63	9	M8	16	4	2,3
05240-10X	53,5 / 58,5 / 63,5 / 68,5 / 83,5	11	M10	20	5	3,5
05240-12X	64,5 / 69,5 / 74,5 / 84,5 / 104,5	13	M12	25	6	4,6
05240-16X	70,3 / 75,3 / 85,3 / 105,3 / 130,3	15	M16	32	7	6

Pressure bolts

with thrust member



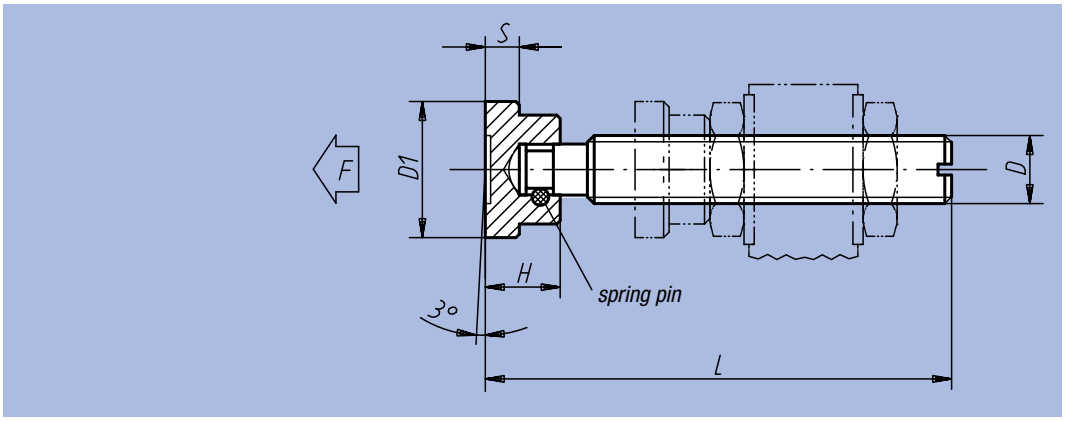

Material:
Bolt and thrust member:
free-cutting steel

Surface finish:
Bolt: black;
thrust member: black oxide finish;
bolt pin and thrust member: case-hardened

Sample order:
nlm 05241-10X84

Order No.	L	H	D	D1	S	F max. kN	◻ kg
05241-06X52	52	7	M6	12	2,5	1	0,015
05241-08X63	63	9	M8	16	4	2,3	0,032
05241-10X84	84	11	M10	20	5	3,5	0,060
05241-12X104	104	13	M12	25	6	4,6	0,110
05241-14X105	105	14	M14	28	6	5	0,140
05241-16X130	130	15	M16	32	7	6	0,230

Neoprene pressure screws



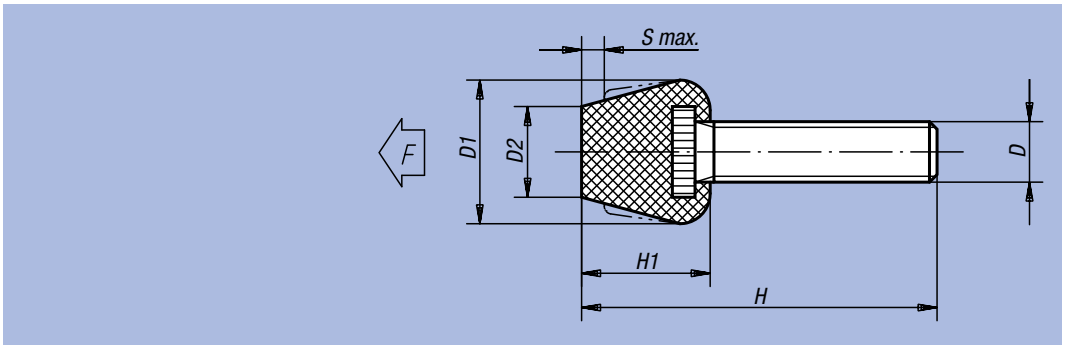

Material:
Bolt in tempered steel;
thrust member in neoprene

Surface finish:
Neoprene sprayed on to the threaded part

Sample order:
nlm 05260-08

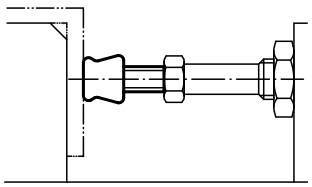

Order No.	H	H1	D	D1	D2	S max.	F max. N	kg
05260-08	63	17	M8x46	19	12	3	750	0,030
05260-081	43	17	M8x26	19	12	3	750	0,019
05260-10	80	18	M10x61	19	14	3,5	1000	0,042
05260-101	54	18	M10x36	19	14	3,5	1000	0,025

Protective caps



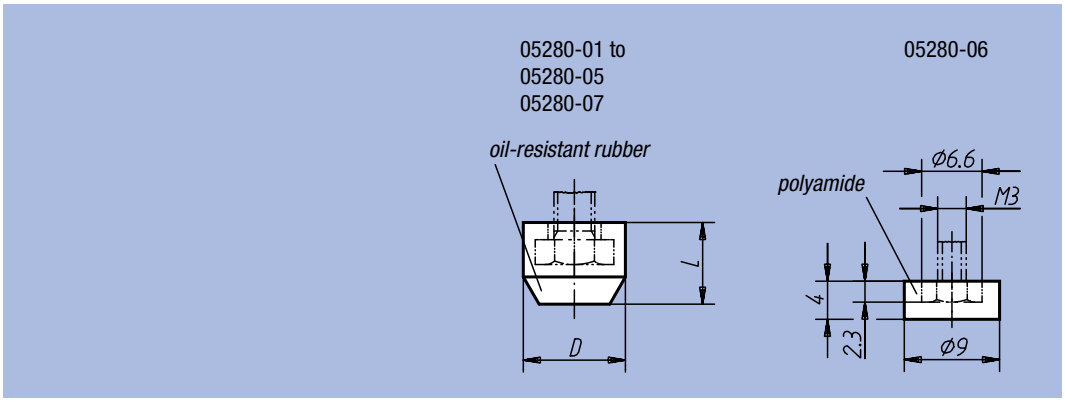

Material:
05280-01 to 05280-05 and 05280-07: oil-resistant rubber;
05280-06: polyamide

Surface finish:
Rubber: black; polyamide: white

Sample order:
nlm 05280-03

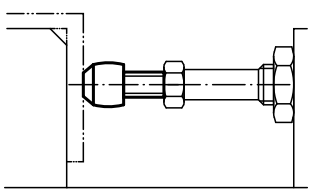

Order No.	D	L	for screws	g
05280-06	-	-	M3	1
05280-01	11	8,5	M4	1
05280-02	12,5	10	M5	1
05280-03	15	12	M6	2
05280-04	19	15	M8	4
05280-07	23	18	M10	7
05280-05	26	20	M12	10

Pneumatic clamps



Material:
Levers: sheet steel;
axial bolts: stainless steel

Surface finish:
Levers: galvanised, ratchet-pneumatic cylinder, double-acting, anodized; clamp galvanised and passivated; complete with hardened, galvanised and passivated press-on bolt and protective cap

Sample order:
nlm 05330-03

Note:
Compared to hand clamps, pneumatic clamps have the following advantages:
The operator is relieved of frequent clamping. Several clamps can be activated at the same time and can be closed in a specific sequence.
Single or multiple clamps can be activated from varying positions by machine control or hand control.
As a result of the knee-operated lever system:
– the clamp remains closed if the air supply fails.
– the compressed air consumption is low as a result of the large end transfer.
– pivoting the clamping arm achieves a large opening travel.
– optimum force and movement ratios are achieved.

VL = compressed air consumption per complete cycle in dm³ at 6 bar.

Selection criteria:
To select the correct size of clamp in the case of pneumatic clamps, the possible clamping force at 6 bar (any compressed media are permissible, maximum pressure 10 bar), is specified besides the bracing force. F3 is the possible clamping force that the clamp exerts on the end of the clamping arm, F4 the force it exerts on the fulcrum side.

Control:
The piping diagram for the simplest control of one or several pneumatic clamps is shown adjacent. When constructing complete switching systems consult the well-known manufacturers of pneumatic valves, who also supply all the required connectors and fittings.

Attention:
The forces F1 and F2 specified in the table are holding forces; F3 and F4 are clamping forces.

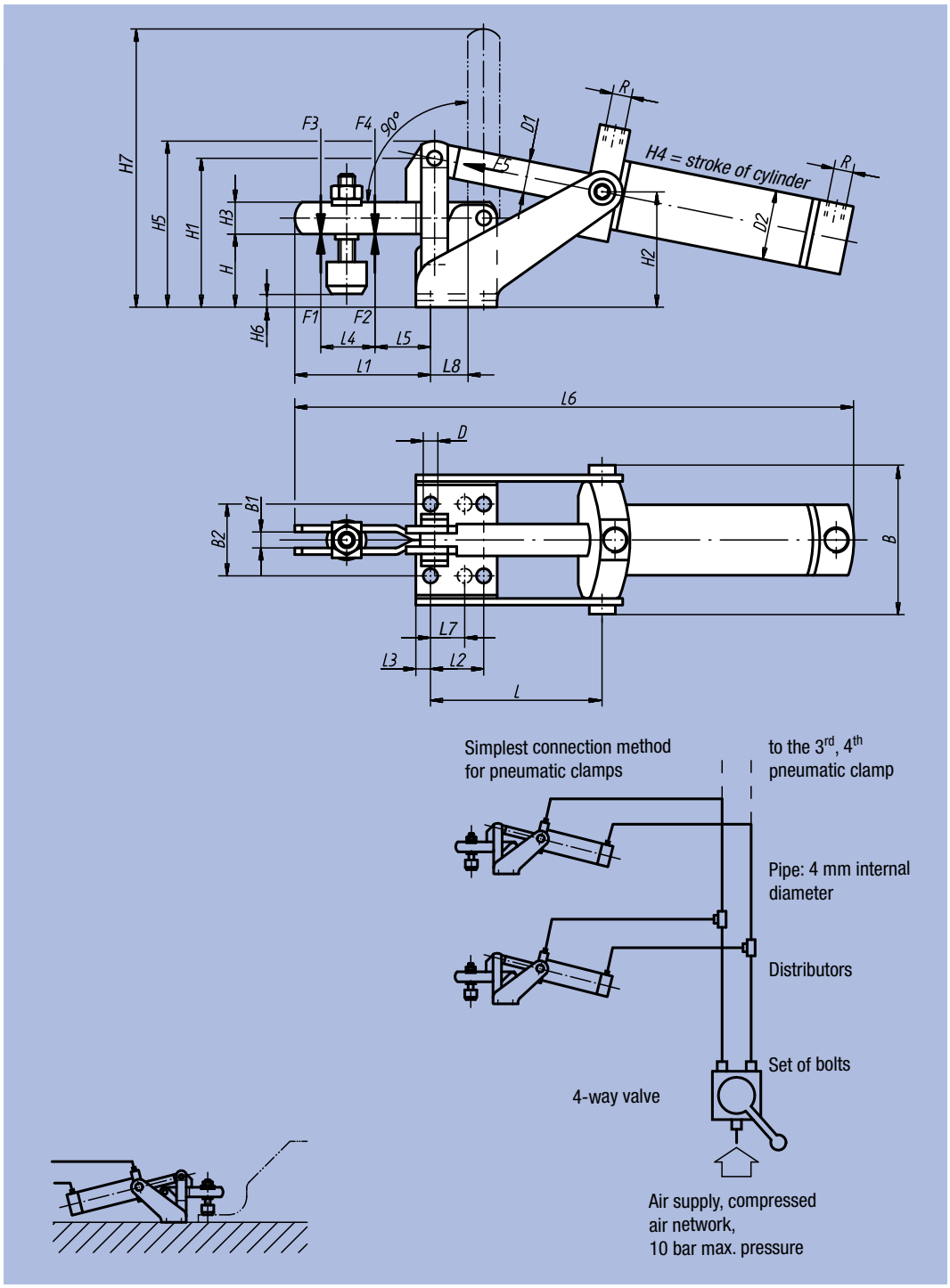

Order No.	L	L1	L2	L3	L4	L5	L6	L7	L8	B	B1	B2	H	H1	H2	H3	H4 Stroke
05330-01	58	38	16	6	19	14	175	-	12	50	5	24	22	47	32	10	34
05330-02	53	51	20	5,5	27	18	200	12,5	13	62	6	27	27	56	41	12	42
05330-03	63	80	20	7,5	43	27	260	-	16	70	8	32	36	74	56	18	52
05330-04	86	100	32	8	52	35	315	-	22	84	10	45	45	87	64	20	62

Order No.	H5	H6	H7	D	D1	D2	R	F1 kN	F2 kN	F3 kN	F4 kN	F5 kN	VL	suitable Pressure Screws	kg
05330-01	52	-2 bis 5	85	4,5	6	16	M5	0,8	1,1	0,2	0,3	0,1	0,08	M5x30	0,610
05330-02	66	-1 bis 8	106	5,5	12	25	M5	1	1,2	0,7	1	0,3	0,26	M6x35	0,870
05330-03	85	2 bis 14	157	7,1	12	32	G1/8	1,4	2,5	0,65	1,1	0,5	0,35	M8x45	1,160
05330-04	100	-5 bis 24	194	8,5	16	40	G1/8	2	3	1,5	2,2	0,75	0,8	M8x65	1,900

Push-rod pneumatic clamps



Material:
Base in cast iron;
levers and push-rod in tempered steel

Surface finish:
Body: painted;
bracket, levers and push-rod galvanised and passivated

Sample order:
nlm 05340-07

Note:
The pneumatic clamp can be used as a pressure and tension clamp.
The heavy design as well as the dual effect RATCHET pneumatic cylinder guarantee a long life.
The galvanised and passivated press-on bolt with protective cap is also supplied.

VL = compressed air consumption per complete cycle in dm³ at 6 bar.

Attention:
The forces F1 specified in the table are holding forces; F2 are clamping forces.

05340-03

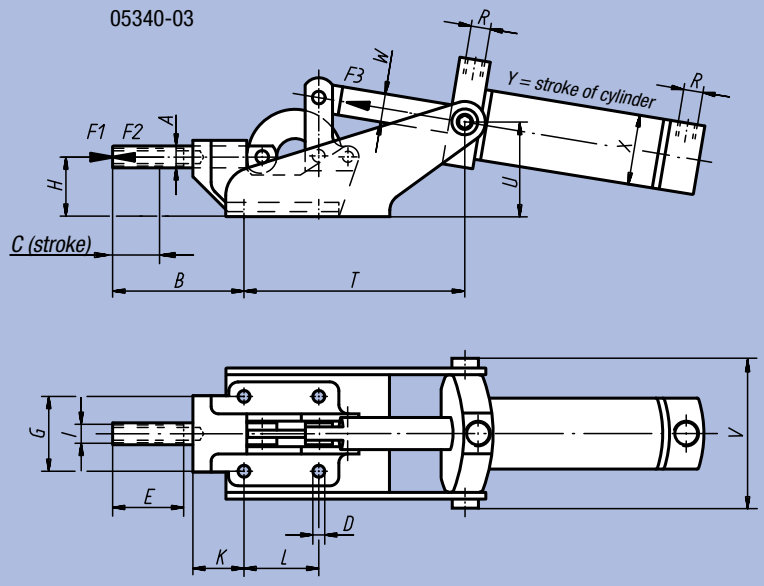

05340-05
05340-07

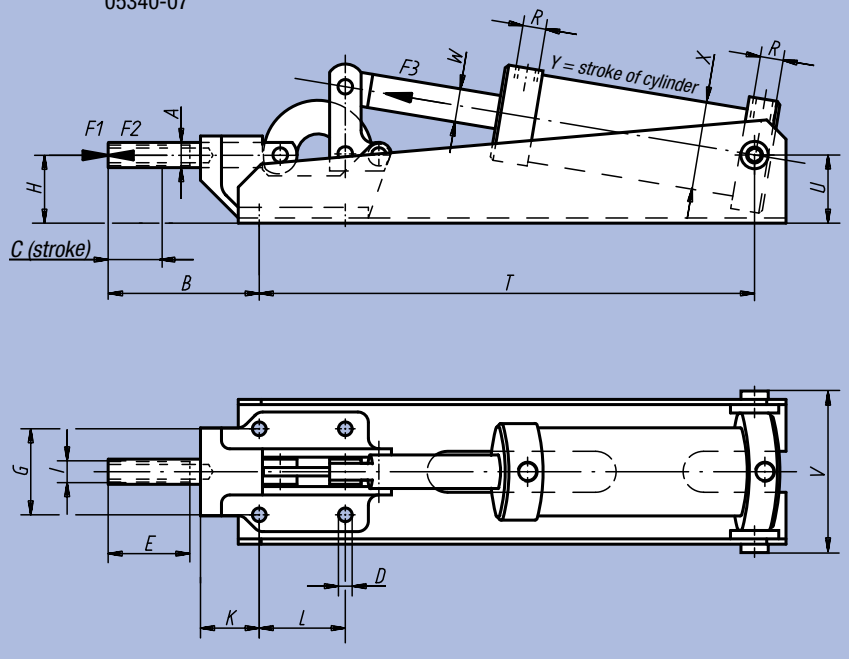

Order No.	A	B	C (stroke)	D	E	G	H	I	K	L	T	U	V	W
05340-03	12	72	20	6,5	30	41	32,5	M8	28	41	125	56	84	16
05340-05	16	97	32	8,5	50	41	41	M12	45	41	322	38	84	16
05340-07	22	105	40	11	50	57	59	M12	44	70	404	49	114	16

Order No.	X	Y	R	F1 kN	F2 kN	F3 kN	VL	Total height	Total length	suitable Pressure Screws	kg
05340-03	40	62	G1/8	4	2,5	0,75	0,8	91	328	M8x35	1,800
05340-05	50	100	G1/8	10	5	1	2,2	110	437	M12x50	3,400
05340-07	63	125	G1/4	25	10	1,8	4,5	150	533	M12x50	7,680

Vertical pneumatic clamps

heavy model



Material:
Tempered steel

Surface finish:
Black oxide finish

Sample order:
nlm 05350-06

Note:
The double-acting RATCHET pneumatic cylinder guarantees a long life.
The fixing screws for the axial bolts are secured with LOCTITE.
The magnetic shaft is prepared for electrical final position querying.

VL = compressed air consumption per complete cycle in dm³ at 6 bar.

Attention:
The forces F1 and F2 specified in the table are holding forces; F3 and F4 are clamping forces.

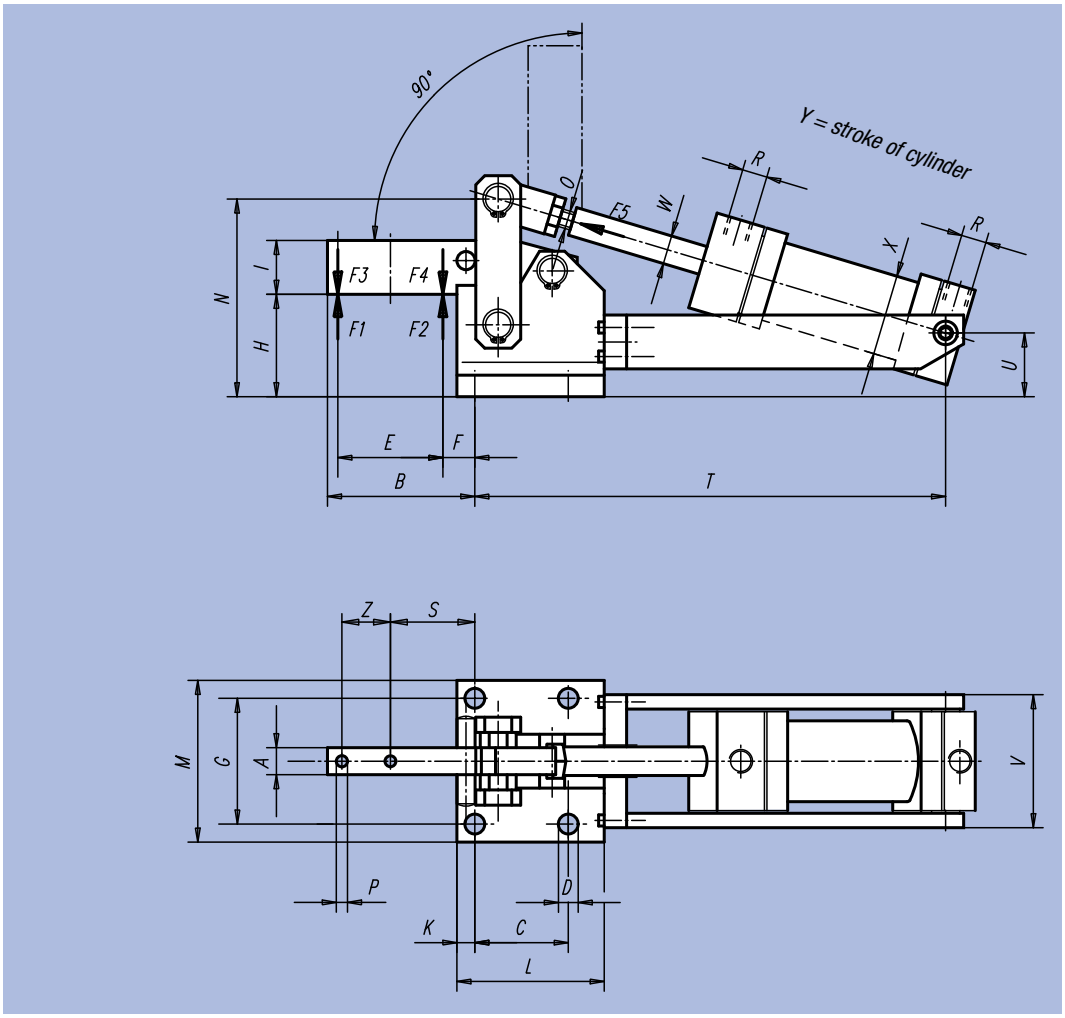

Order No.	A	B	C	D	E	F	G	H	I	K	L	M	N	O	P	R	S	T
05350-04	15	82	52	11	54	20	70	57	30	10	77	90	109	M12x1,25	6,2	G¼	47	277
05350-06	20	90	55	11	60	21	83	61	40	11	85	105	129	M16x1,5	8,2	G¼	53	315
05350-08	30	128	80	13	95	22	111	86	60	12,5	112,5	135	176	M16x1,5	13,2	G¼	69,5	383

Order No.	U	V	W	X	Y	Z	Total height	Total length	F1 kN	F2 kN	F3 kN	F4 kN	F5 kN	VL	□ kg
05350-04	35,5	82	16	40	80	27	122	380	6	9	1,5	2,2	0,75	1	4,380
05350-06	40	101	16	50	100	26	147	435	12	18	2,5	3,5	1	1,8	7,360
05350-08	54	123	20	63	120	40	196	540	20	30	4	6	1,8	4,3	16,800

Pneumatic Clamps, vertical

with vertical add-on cylinder



Material:
Tempered steel

Surface finish:
Black oxide finish

Sample order:
nlm 05360-08

Note:
The clamps 05350 and 05360 are suitable for fitting in special machines and transfer machines. They are maintenance-free as a result of the tempered annd ground bearing pins, which run in Teflon bearings. The heavy design also guarantees a long life, as does the double-acting FESTO pneumatic cylinder.
The fixing screws for the axial bolts are secured with LOCTITE.
The magnetic piston is ready for electric end-stop detector.

VL = compressed air consumption per complete cycle in dm³ at 6 bar.

Clamping and holding forces
The selection of the correct size of clamp depends on the forces (see table). We distinguish between holding force F1 or F2 and clamping force F3 or F4.

The clamping force F3 and F4
is the force exerted by the clamping arm on the part to be machined when the clamp is being closed.

The holding force F1 and F2
is the force with which the closed clamping arm opposes the machining forces occurring at the part to be machined and which it resists with no permanent deformation. It is greater than the clamping force because the dead point of the lever has to be overcome with the clamp closed when being pushed back.

On request:
Clamps without cylinder.

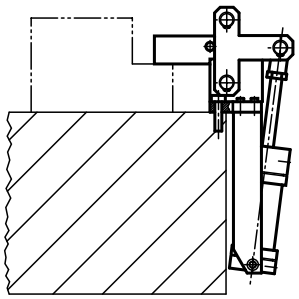

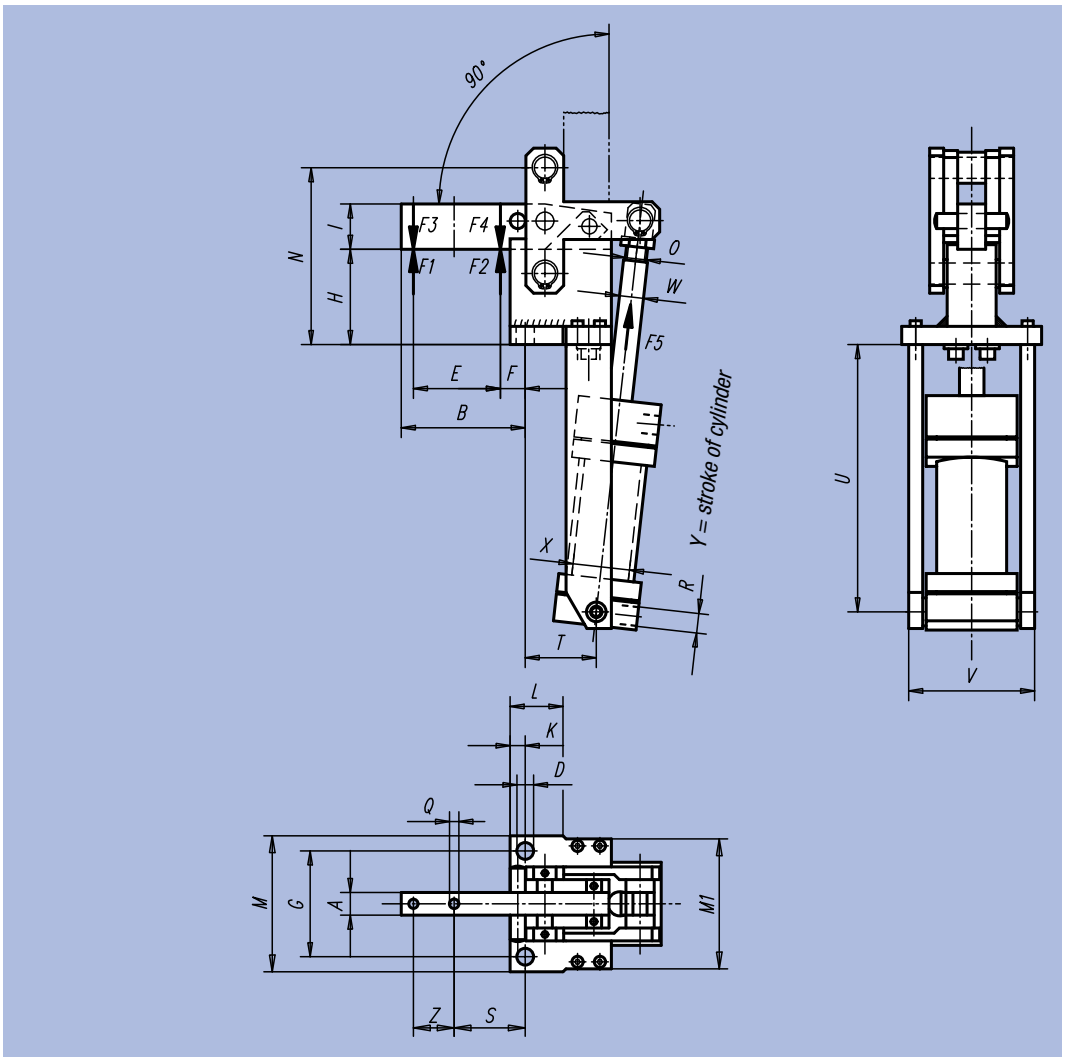

Order No.	A	B	D	E	F	G	H	I	K	L	M	M1	N	O	Q	S	T
05360-04	15	82	11	54	20	70	65	30	10	35	90	90	117	M12x1,25	6,2	47	46
05360-06	20	91	13	60	22	83	69	40	12	32	107	100	137	M16x1,5	8,2	54	48
05360-08	30	125	17	95	24,5	115	94	60	15	49	145	123	184	M16x1,5	13,2	67	77

Order No.	U	V	W	X	Y	R	Z	Total height	Total length	F1 kN	F2 kN	F3 kN	F4 kN	F5 kN	VL	□ kg
05360-04	193	82	16	40	74	G¼	27	172	340	6	9	1,5	2,2	0,75	1	5,100
05360-06	221	101	16	50	87	G¼	26	195	386	12	18	2,5	3,5	1	1,8	7,250
05360-08	255	123	16	63	120	G¼	40	272	470	20	30	4	6	1,8	4,3	16,800

Vertical, quick-acting clamps

heavy model



Material:
Steel

Surface finish:
Black oxide finish

Sample order:
nlm 05400-04

Note:
The axial bolts must be frequently lubricated.

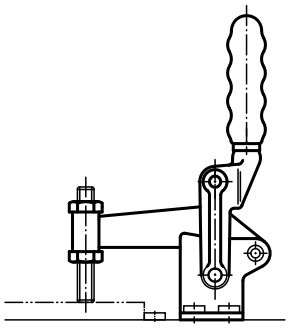

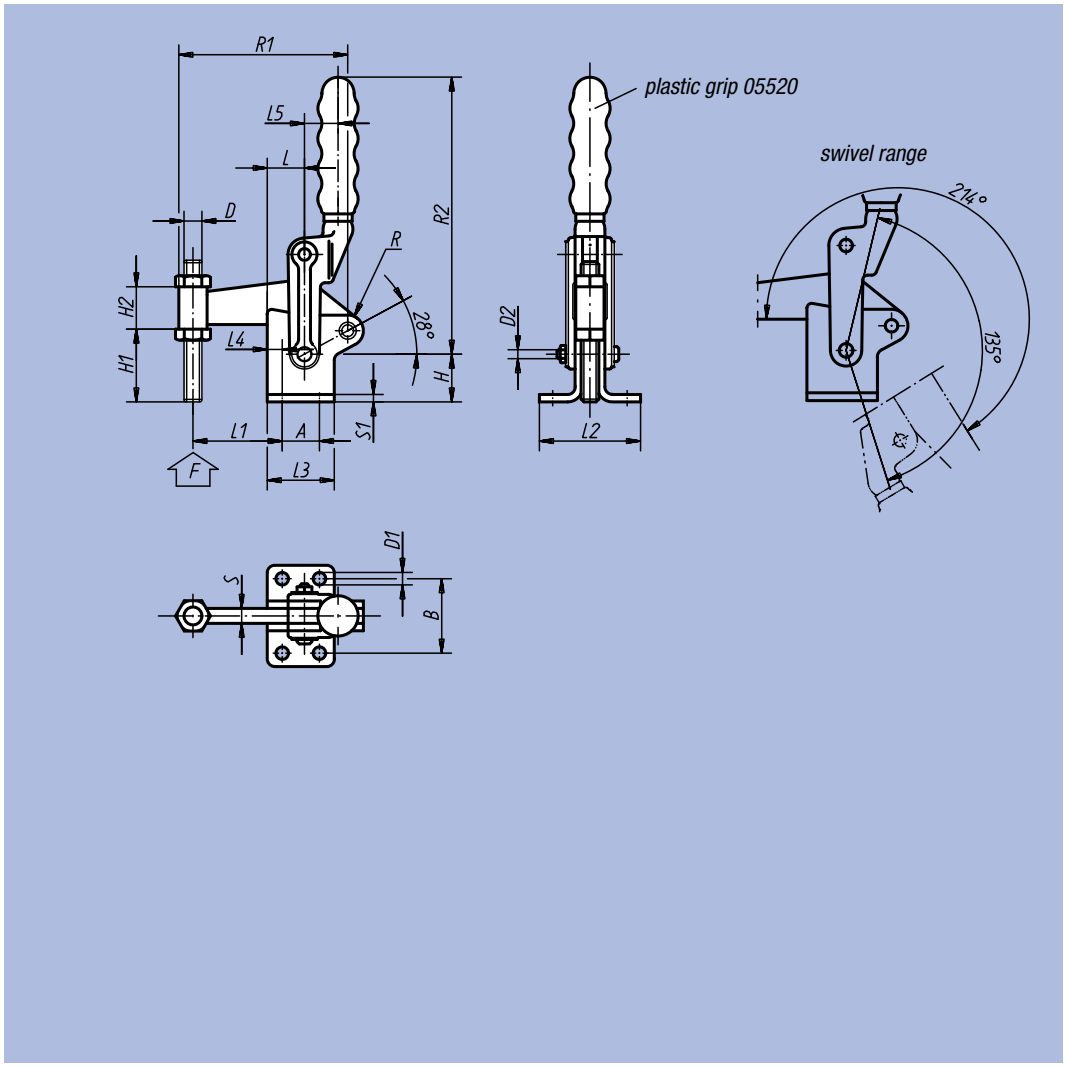

Order No.	L	L1	L2	L3	L4	L5	B	H	H1	H2	A	D	D1	D2	S	S1	R	R1	R2	F kN	kg
05400-02	25	60	68	45	10	23	50	30	45	30	25	M12	8,2	10	10	5	10	115	185	6	1,125
05400-04	25	70	88	51	10,5	25	60	36	60	30	30	M12	8,2	19	12	6	13	132	214	8	1,950
05400-06	40	88	104	64	12	35	75	46	75	38	40	M16	10,3	25	16	8	17	172	250	15	4,100

Quick-acting clamps, heavy model

straight foot



Material:
Steel

Surface finish:
Black oxide finish

Sample order:
nlm 05420-02

Note:
The axial bolts must be frequently lubricated. Avoid splashing welding material in the joints while assembling components (lever, arm).
The Quick-acting clamp can be assembled without the central base, directly on another support. To do so, unscrew bolt D2, remove the base and re-assemble the quick-acting clamp on the support located at D2.
Do not forget to weld plates A onto the new support.

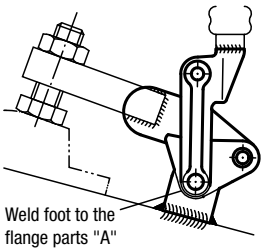

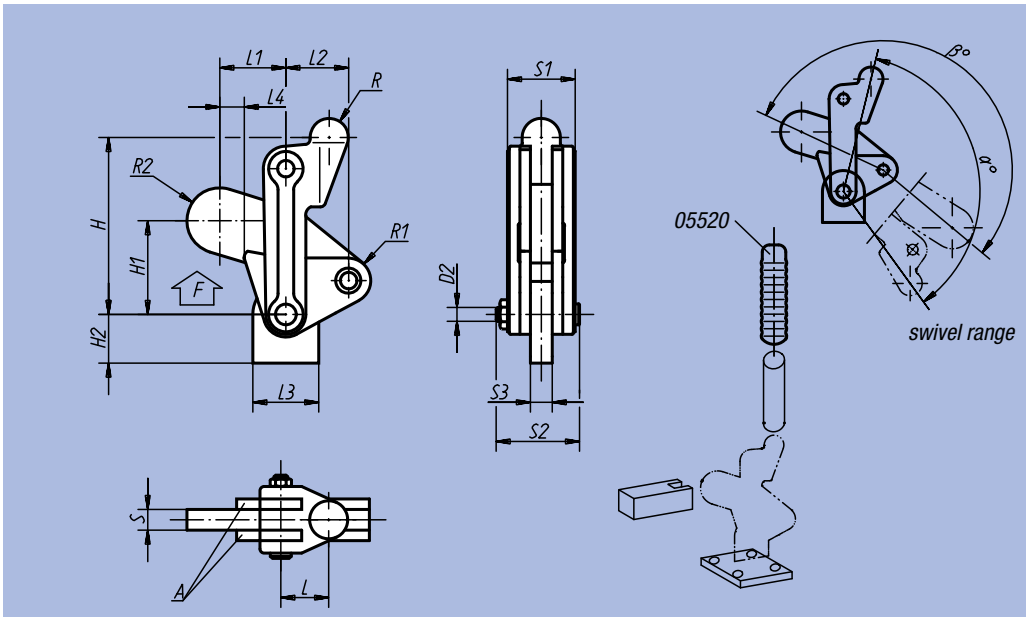

Order No.	L	L1	L2	L3	L4	H	H1	H2	D2	S	S1	S2	S3	R	R1	R2	α°	β°	F kN	kg
05420-02	23	26,5	29	29	1,5	84	38,5	20	8,2	10	32	41	10	10	10	13,5	134	205	7	0,700
05420-04	25	38	36	38	13	100	54	28	9,5	12	38	48	12	11	13	19	134	203	12	1,300
05420-06	35	51	44	51	10	129	69	33	12,6	16	50	62	16	15	17	22	132	200	24	2,900

Plastic Grips



Material:
Plastic

Surface finish:
Green

Sample order:
nlm 05520-04

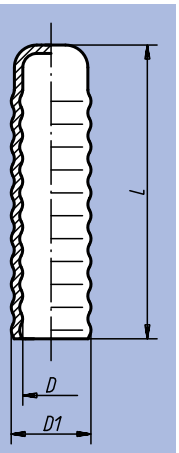

Order No.	L	D	D1	g
05520-09	80	10	14,6	6
05520-00	80	12	16,5	7
05520-01	90	16	21	13
05520-02	90	19	25	12
05520-04	100	22	27	15
05520-06	100	25	29	20

Notes:

Fasteners

with spring clip



Material:
Steel or stainless steel 1.4301

Surface finish:
Galvanized, thick-coat passivated and sealed with top coat;
stainless steel, natural finish

Sample order:
nlm Fasteners 05526-1550911
nlm Clamp 05526-91420141

Note:
Fasteners with spring clips for safe holding and locking of flaps, container lids, machine covers and the like.
The clamping stroke exceeds the dead centre point which makes them vibration proof.
The fastening force is applied by twisting a spring clip.

The fasteners can be screwed on or rivetted.

Please order clamps separately.

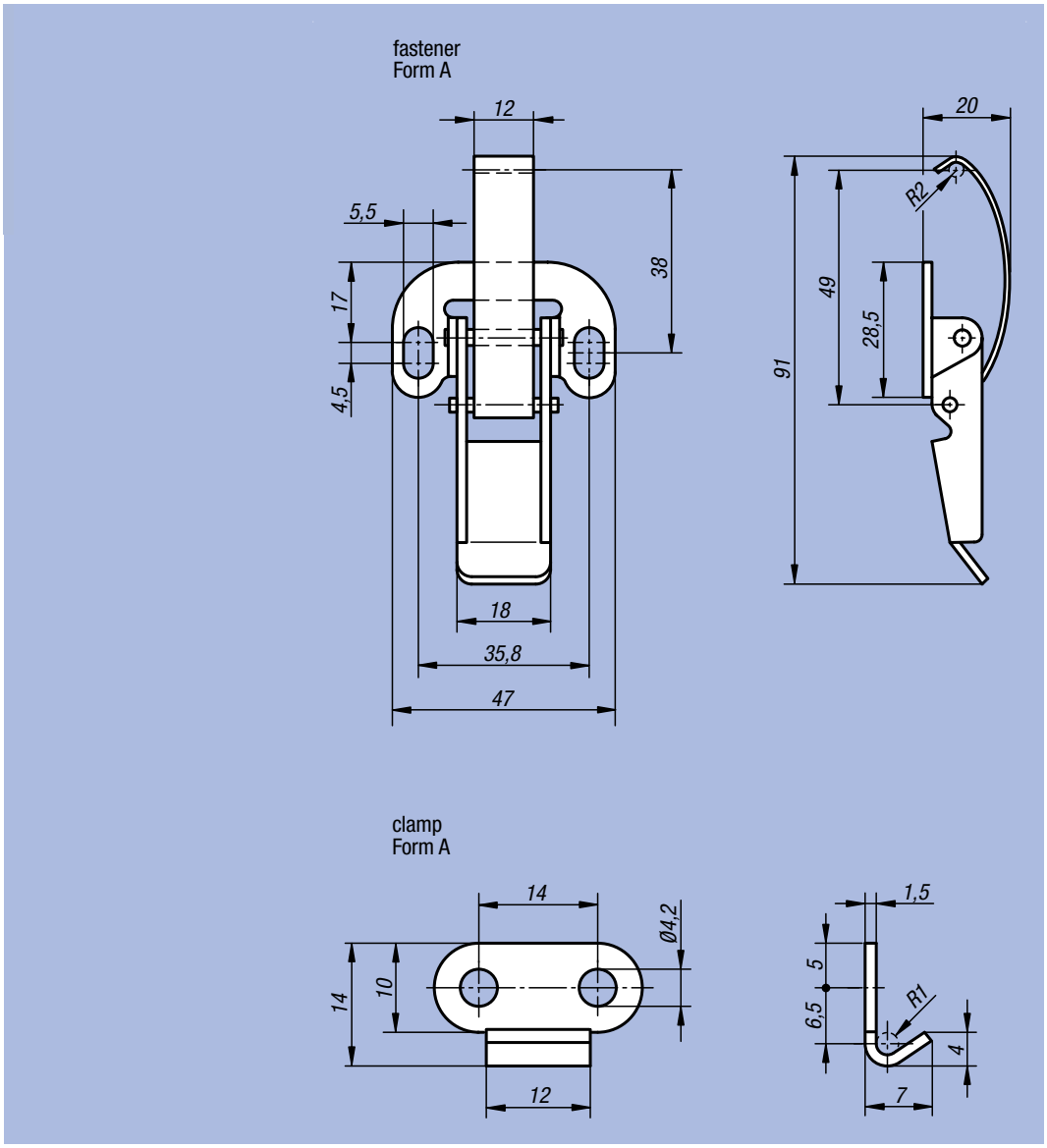

Fasteners with spring clip

Order No. Material steel	Order No. Material stainless steel	Form	g
05526-1550911	05526-1550912	A	45

Clamp

Order No. Material steel	Order No. Material stainless steel	Form	g
05526-91420141	05526-91420142	A	4

Fasteners

with a pulling latch



Material:
Steel or stainless steel 1.4301

Surface finish:
Galvanized, thick-coat passivated and sealed with top coat;
stainless steel, natural finish

Sample order:
nlm Fastener 05531-1420491
nlm Clamp 05531-92520211

Note:
Fasteners with a pulling latch for safe holding and locking of flaps, container lids, machine covers and the like.
The clamping stroke exceeds the dead centre point which makes them vibration proof.
The fastening force is applied by twisting of a pulling latch.

The fasteners can be screwed on or rivetted.

Please order the desired model of the clamp separately.

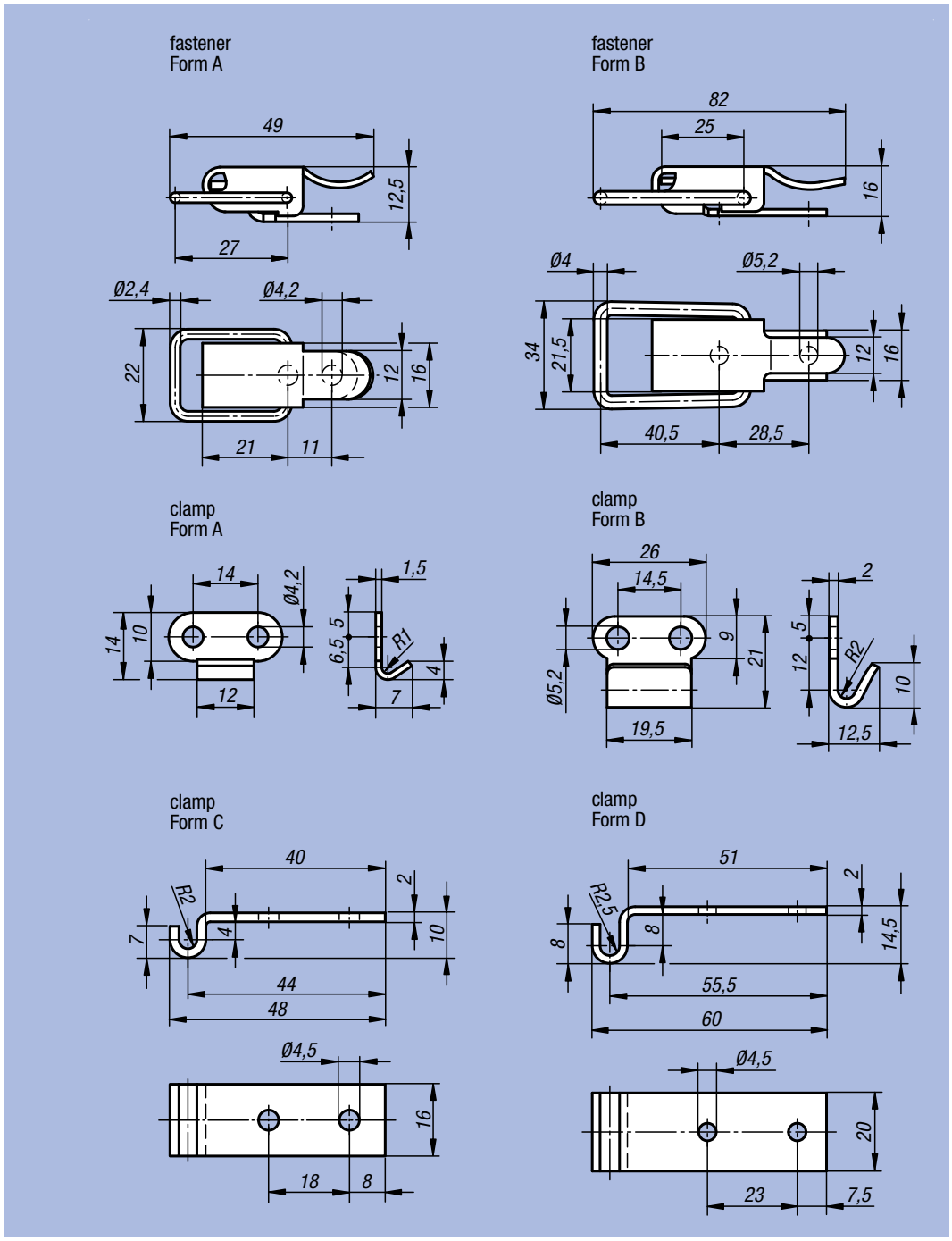

Fasteners with a pulling latch

Order No. Material steel	Order No. Material stainless steel	Form	g
05531-1420491	05531-1420492	A	21
05531-2520821	05531-2520822	B	56

Clamp

Order No. Material steel	Order No. Material stainless steel	Form	g
05526-91420141	05526-91420142	A	4
05531-92520211	05531-92520212	B	10
05531-93450481	05531-93450482	C	13
05531-94450601	05531-94450602	D	21

Fasteners

with a pulling latch



Material:
Steel or stainless steel 1.4301

Surface finish:
Galvanized, thick-coat passivated and sealed with top coat;
stainless steel, natural finish

Sample order:
nlm Fastener 05536-1520871
nlm Clamp 05536-91520601

Note:
Fasteners with a pulling latch for safe holding and locking of flaps, container lids, machine covers and the like.
The clamping stroke exceeds the dead centre point which makes them vibration proof.
The fastening force is applied by twisting of a pulling latch.

The fasteners can be screwed on or rivetted.

Please order the desired model of the clamp separately.

On request:
Lockable version with a lock bracket.

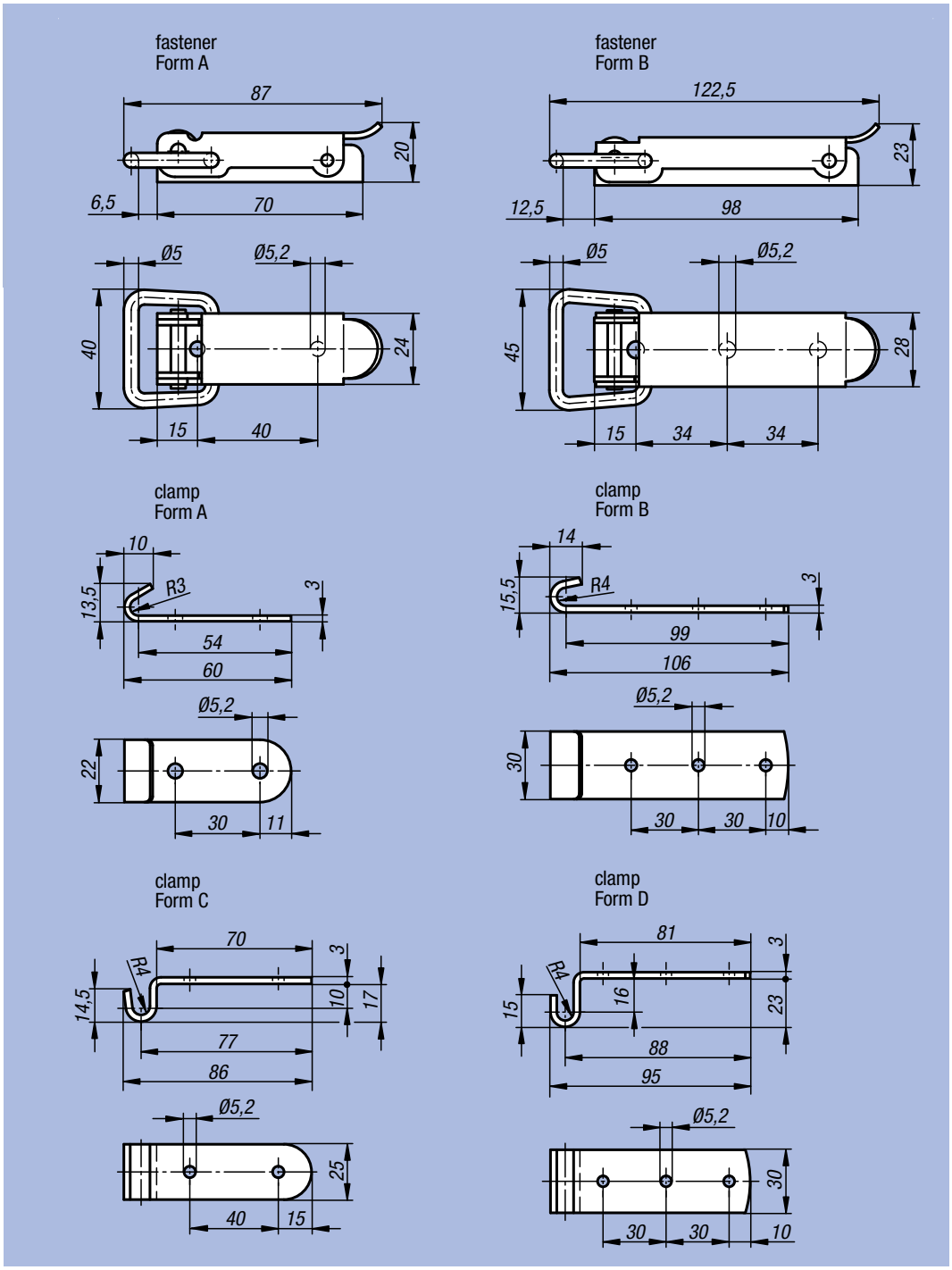

Fasteners with a pulling latch

Order No. Material steel	Order No. Material stainless steel	Form	g
05536-1520871	05536-1520872	A	101
05536-2521221	05536-2521222	B	159

Clamp

Order No. Material steel	Order No. Material stainless steel	Form	g
05536-91520601	05536-91520602	A	34
05536-92521061	05536-92521062	B	79
05536-93520861	05536-93520862	C	59
05536-94520951	05536-94520952	D	80

Fasteners adjustable

with a movable hook clamp



Material:
Steel or stainless steel 1.4301

Surface finish:
Galvanized and blue chromated; stainless steel natural finish

Sample order:
nlm Fastener 05550-1421121
nlm Clamps 05550-9135211

Note:
Adjustable fasteners serve as a safe sealing system for industrial applications. The clamping stroke exceeds the dead centre point which makes them vibration proof. In order to compensate the tolerances the fastener has a movably mounted hook clamp.

After the hook clamp is hooked into the clamp, straining the handle can pull the parts to be clamped together by up to 15 mm. In order to compensate the tolerances or to create enough tension the hook clamp can be adjusted by means of a spindle (M6).

The fasteners can be screwed on or rivetted.

Please order clamps separately.

On request:
Available with protection against dehiscing.

fastener
Form A

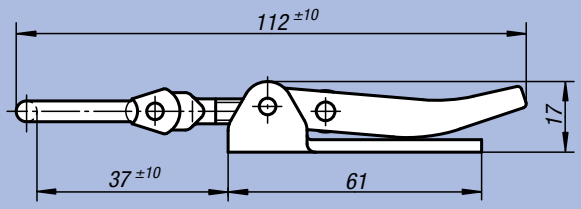

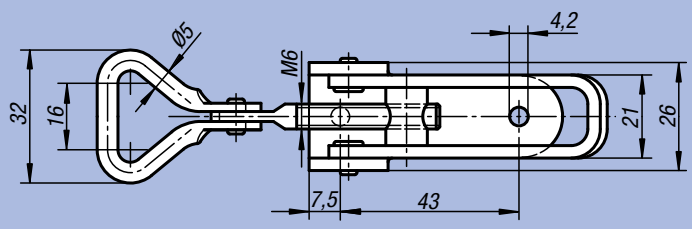

clamp
Form A

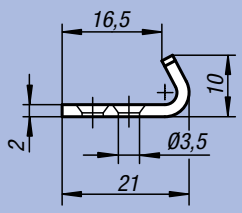

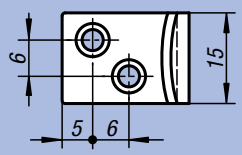

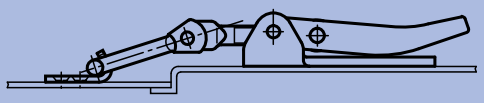

Fasteners adjustable with a movable hook clamp

Order No. Material steel	Order No. Material stainless steel	Form	Holding force F1 N
05550-1421121	05550-1421122	A	1000

Clamp

Order No. Material steel	Order No. Material stainless steel	Form
05550-9135211	05550-9135212	A

Fasteners adjustable



Material:
Steel or stainless steel 1.4301

Surface finish:
Galvanized and blue chromated; stainless steel natural finish

Sample order:
nlm Fastener 05552-1611451
nlm Clamp 05552-9143381

Note:
Adjustable fasteners serve as a safe sealing system for industrial applications. The clamping stroke exceeds the dead centre point which makes them vibration proof.

After the hook clamp is hooked into the clamp, straining the handle can pull the parts to be clamped together by up to 15 mm. In order to compensate the tolerances or to create enough tension the hook clamp can be adjusted by means of a spindle (M8).

The fasteners can be screwed on or rivetted.

Please order the desired model of the clamp separately.

On request:
Lockable version with a lock bracket.

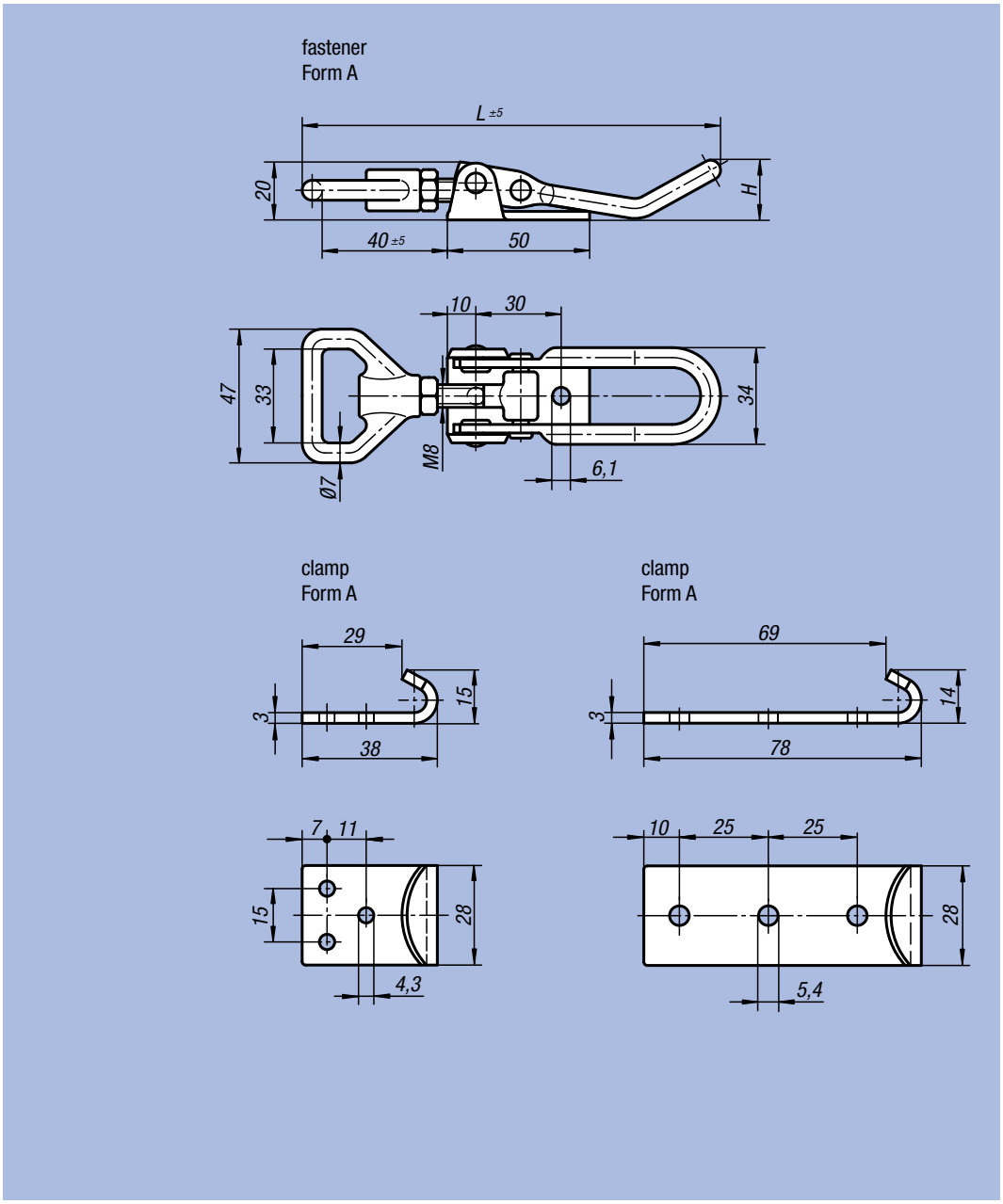

Fasteners adjustable

Order No. Material steel	Order No. Material stainless steel	Form	H	L	Holding force F1 N
05552-1611451	05552-1611452	A	21	145	6500
05552-1611681	05552-1611682	A	36	168	6500

Clamp

Order No. Material steel	Order No. Material stainless steel	Form
05552-9143381	05552-9143382	A
05552-9254781	05552-9254782	B

Fasteners adjustable

heavy-duty model



Material:
Steel

Surface finish:
Galvanized and blue chromated;
clamp Form B (welded), natural finish

Sample order:
nlm Fastener 05560-1702041
nlm Clamp 05560-91851201

Note:
Massive forged fasteners for heavy tensile load which are primarily used in utility vehicles and agricultural engine construction as well as in construction vehicles. In the locked state the fastener is secured against unintended release by means of a notch.

In order to compensate the tolerances or to create enough tension the hook clamp can be adjusted by means of a spindle (D1).

Please order the desired model of the clamp separately.

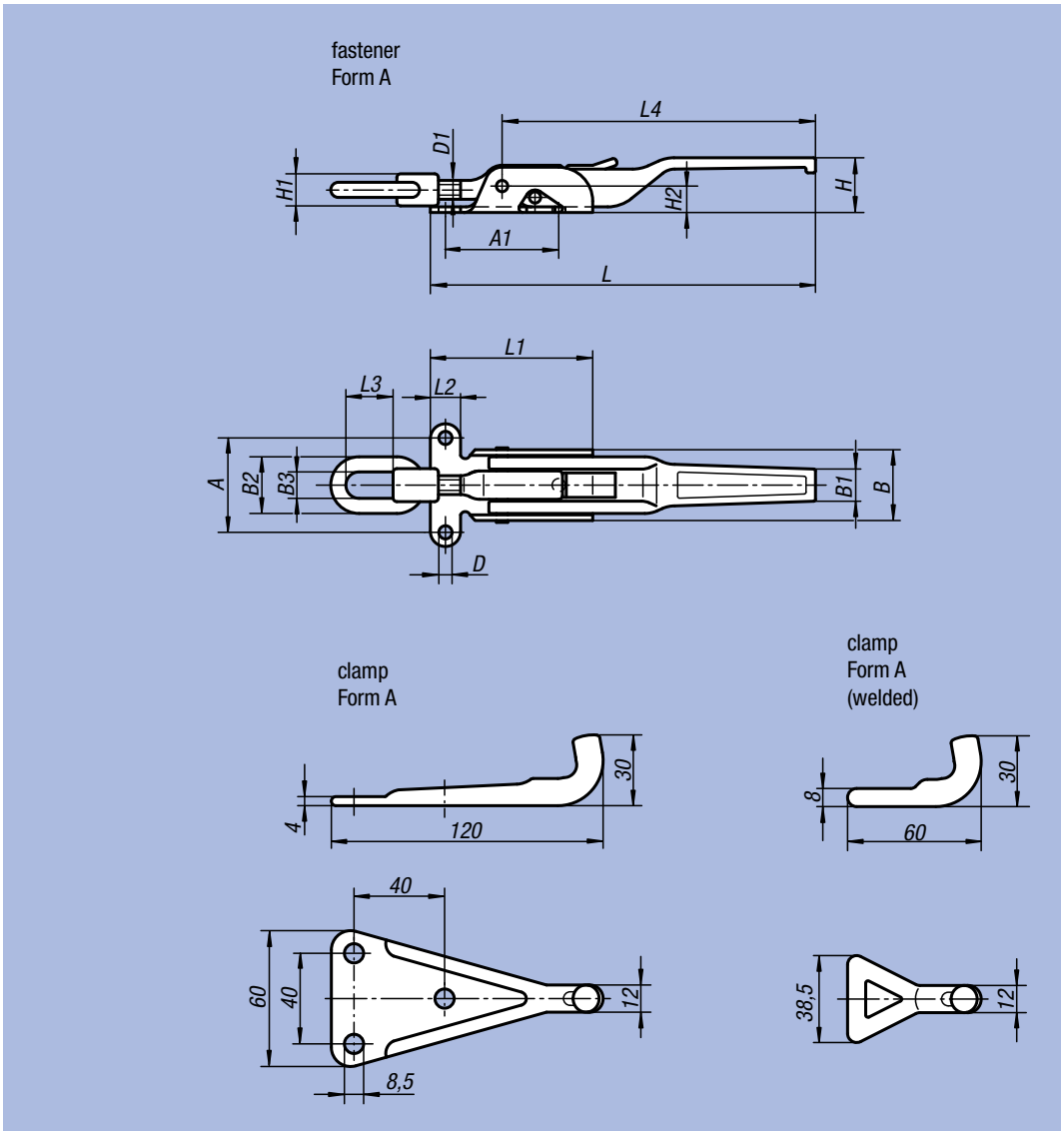

Fasteners adjustable, heavy-duty model

Order No.	Form	A	A1	B	B1	B2	B3	D	D1	H	H1	H2	L	L1	L2	L3	L4	Holding force F1 N	kg
05560-1702041	A	50	62	37	18	30	14	7	M10	30	17	14	204	86	16	25	165	40000	0,490
05560-1852371	A	65	82	50	20	36	15	8,5	M14x1,5	32	20	18	237	104	21	40	190	40000	1,020

Clamp

Order No.	Form	kg
05560-91851201	A	0,190
05560-92000601	B	0,085

Clamping vice

Material:
Steel

Surface finish:
Black oxide finish or nickel-plated

Sample order:
nlm 05600-075

Note:
A clamping element, with which parallel clamping forces can be produced outwardly and inwardly. The spindle drive allows very sensitive clamping and yet very high forces. The jaws are pivotable and have smooth, V-shaped, slotted surfaces. Parts to be machined can thus be clamped in the correct way, even if they are pressure-sensitive. The clamping vice lies in the same plane as the clamped part to be machined and therefore hardly impinges on the workspace. Each clampng vice clamps from zero to the maximum width. Its low weight makes work easier.

application example:

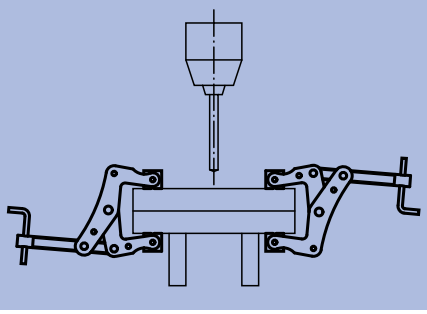

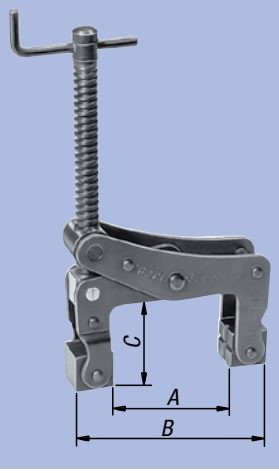

Order No. Surface finish black oxide finish	Order No. Surface finish nickel-plated	Material of jaws	A Opening for pressure	B Opening for traction	C Clamping depth	Clamping force kN	kg
05600-050	05600-0502	steel	0 - 50	32 - 82	30	2	0,230
05600-051	-	plastic	0 - 50	32 - 82	30	2	0,260
05600-075	05600-0752	steel	0 - 75	40 - 115	50	2,5	0,450
05600-100	05600-1002	steel	0 - 100	50 - 150	60	3	0,800
05600-150	05600-1502	steel	0 - 150	50 - 200	100	3	2,000

Notes:

Swing Latch Clamps

pneumatic



Material, surface finish:
Base body aluminium, red anodized; double acting piston rod in stainless steel, polished

Sample order:
nlm 05610-112

Note:
Swing clamps are used where low clamping forces suffice or if torsion point must be free in order to place and remove the workpiece. The block design of the housing offers universal fastening possibilities. The magnetic piston is primed for electrical end position feedback.
Including screw and lock washer for fastening the clamping arms which are available as accessories.
The swing clamp must not be constrained in its swinging action.

F1 = at 6 bar max. allowable operating pressure.

On request:
Proximitiy switch.

Accessory:
- Clamping Arm 05620
- Adapter 05625

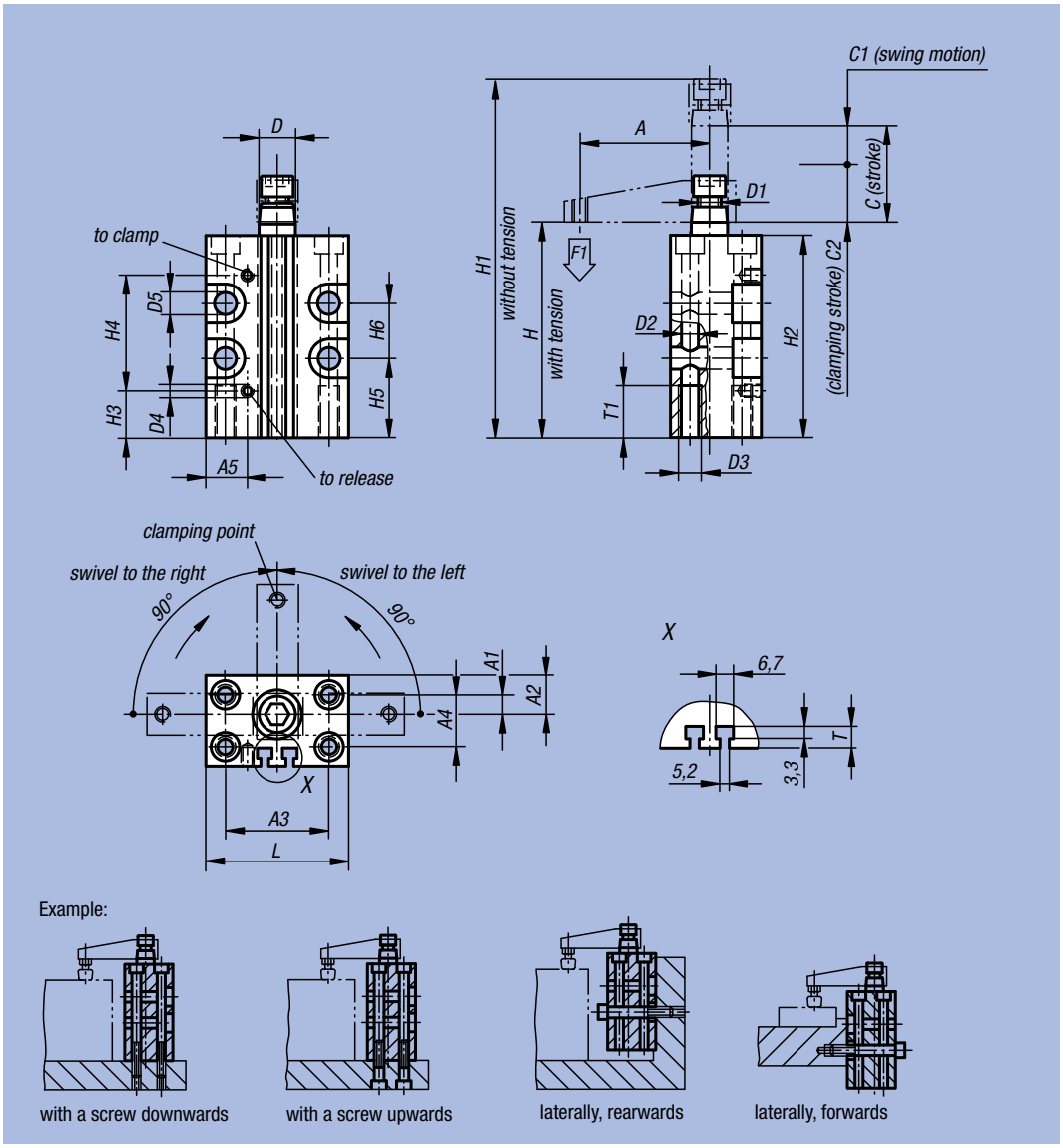

Order No. Surface finish swivel to the right	Order No. Surface finish swivel to the left	Size	A	A1	A2	A3	A4	A5	B	C (stroke)	C1	C2	D	D1	D2	D3
05610-112	05610-212	12	35	0	10	31	-	20	24	16	7	9	8	M5	4,3	M5
05610-116	05610-216	16	41	-2	11	31	-	21	28	16	7	9	8	M5	4,3	M5
05610-120	05610-220	20	48	8	13	36	20	11,5	30	27	12	15	12	M8	5,5	M6
05610-125	05610-225	25	50	7,5	15	40	20	17	35	27	15	12	14	M8	6,5	M8
05610-132	05610-232	32	60	12,5	20	45	30	18	45	30	16	14	16	M8	6,5	M8
05610-140	05610-240	40	70	15,5	24,5	52	37	22	55	31	16	15	16	M8	8,5	M10
05610-150	05610-250	50	80	21,5	31	66	46	25	65	30	15	15	20	M10	8,5	M10
05610-163	05610-263	63	90	27,5	37,5	80	60	30	80	30	15	15	20	M10	10,5	M12

Order No. Surface finish swivel to the right	Order No. Surface finish swivel to the left	Size	D4	D5	H	H1	H2	H3	H4	H5	H6	L	T	T1	F1 kN	kg
05610-112	05610-212	12	M5	4,3	75	104	70	11	51	26	21	40	5	15	0,03	0,200
05610-116	05610-216	16	M5	4,3	75	104	70	11	51	26	21	42	4,5	15	0,06	0,300
05610-120	05610-220	20	M5	5,5	79	124	74	17	44,5	24	22	46	4,5	20	0,08	0,400
05610-125	05610-225	25	M5	8,5	82	125	78	17	44,5	32	-	55	5	20	0,17	0,600
05610-132	05610-232	32	G1/8	8,5	96	145	90	22	50	43	-	60	6,5	20	0,27	0,800
05610-140	05610-240	40	G1/8	8,5	95	145	90	20	52	40	-	70	8	25	0,45	0,920
05610-150	05610-250	50	G1/8	10,5	106	162	100	25	53,5	45	-	85	6,5	30	0,7	1,000
05610-163	05610-263	63	G1/8	10,5	106	162	100	28	53,5	36	-	100	8,5	30	1,1	1,150

Clamping Arm

for swing clamp



Material:
High-strength aluminium alloy

Surface finish:
Coated with hart-coat®

Sample order:
nlm 05620-12

Note:
Tight locking surface, absent welding particles.
Suitable for Swing Clamp, pneumatic 05610, in the respective sizes.

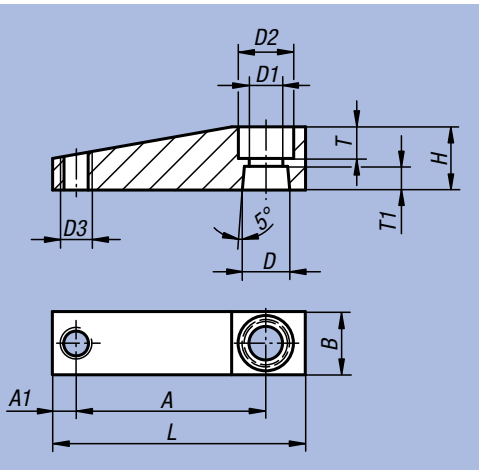

Order No.	Size	A	A1	B	D	D1	D2	D3	H	L	T	T1	kg
05620-12	12	35	4	12	8	5,5	9	M4	12	45	5	5	0,013
05620-16	16	41	4	12	8	5,5	9	M4	12	51	4	5	0,013
05620-20	20	48	6	16	12	8,5	14	M6	16	64	8	6	0,031
05620-25	25	50	6	16	14	9	14	M6	16	66	6	6	0,032
05620-32	32	60	9	20	16	9	14	M8	20	80	7	9	0,055
05620-40	40	70	9	20	16	9	14	M8	20	90	7	9	0,065
05620-50	50	80	10	25	20	11	17	M12	25	105	9	10	0,132
05620-63	63	90	10	25	20	11	17	M12	25	115	9	10	0,149

Adapter

for swing clamps



Material:
High-strength aluminium alloy

Surface finish:
Coated with hart-coat®

Sample order:
nlm 05625-1216

Note:
Tight locking surface, absent welding particles.
For the support of individual clamping arms. Suitable for Swing Clamp, pneumatic 05610, in the respective sizes.

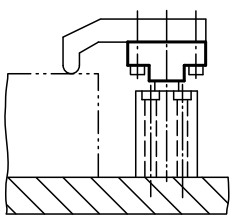

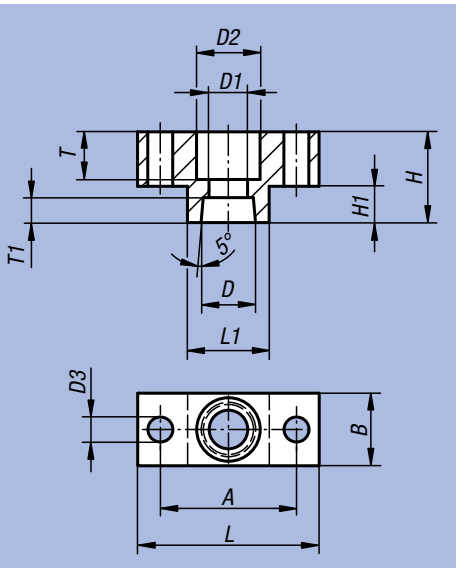

Order No.	Size	A	B	D	D1	D2	D3	H	H1	L	L1	T	T1	kg
05625-1216	12/16	22	12	8	5,5	10	4,5	14	6	30	13	7	5	0,008
05625-2000	20	30	16	12	8,5	14	5,5	20	8	40	18	10,5	5,5	0,020
05625-2500	25	38	16	14	8,5	14	5,5	20	8	50	25	8	6,5	0,028
05625-3240	32/40	45	19	16	8,5	14	7	25	10	60	30	11	9	0,050
05625-5063	50/63	48	25	20	10,5	17	9	30	12	65	30	14	10	0,080

Pneumatic knee-operated lever clamp

Tünkers System

Pneumatic knee-lever clamps are used for economic manufacturing in transfer lines, machine tools, jigs and specialist machines.

Operating principle:
High clamping forces are achieved at low air pressure and air consumption because of the knee-operated lever clamp. The clamping arm is laterally stable and solidly bearing-mounted against rotation, torsion and angular shift. The clamping forces engendered by the knee-operated lever are taken up by thrust bearings.

Particular design features:

Clamp design:
Hardened bushes and guide rails, roller-mounted thrust bearings. Maintenance-free due to permanent lubrication and specialist bearing bushes.

Retaining clamps:
Are completely self-inhibiting. The clamping force is safely guaranteed, even if the pressure is removed. Clip position in the top dead centre position.

Note:
The clamping arm can always be moved from the top dead centre position if the acting retention force does not exceed the clamping force created (e.g. by slippage of the clamped machined part).

Possibilities of querying the end position:

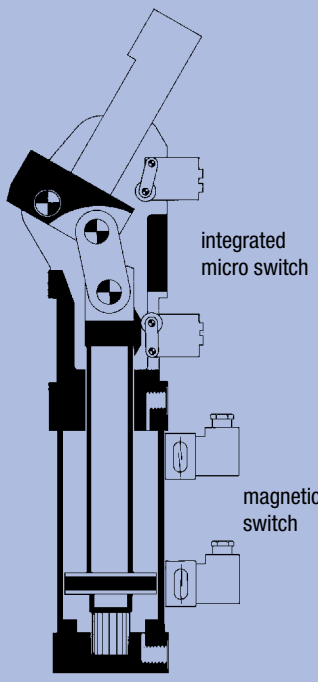

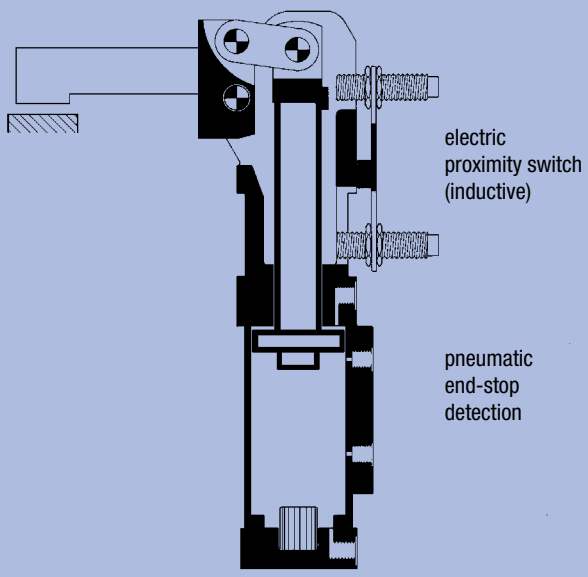

Control:
When building complete switches consult the known manufacturers of pneumatic valves, who also supply all the connecting components and fittings.

Selection criteria:
In order to be able to select the proper clamp size, in the case of pneumatic clamps, in addition to the retention force, the possible clamping force at 5 bar air pressure (max. possible air pressure 8 bar) is also specified.

mounting example

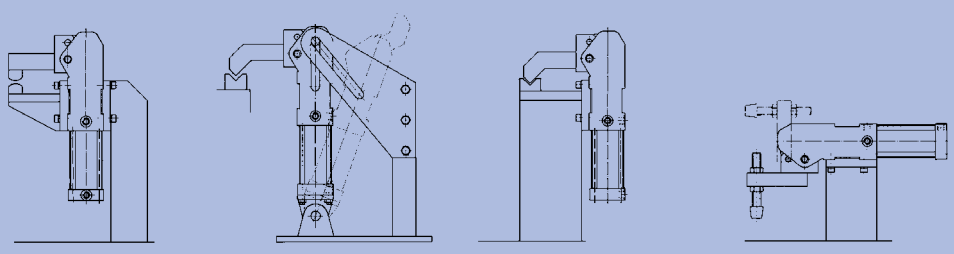

Mini clamps

Tünkers System



Material:
Casing: high-resistance aluminium;
clamping arm: steel

Surface finish:
Casing: anodized;
clamping arm: black oxide finish

Sample order:
nlm 05650-090011

Note:
The mini clamp is characterised by its small dimensions, positioning accuracy of the clamping arm and its light construction. Mini clamps are fully self-limiting. The clamping force is guaranteed, even if the pressure is removed, because the lknee-operated lever built into the clamping arm reaches beyond the dead-centre point. Mini clamps are maintenance-free as a result of constant lubrication. They can be operated using dry, oil-free air.

electrical end-stop detector

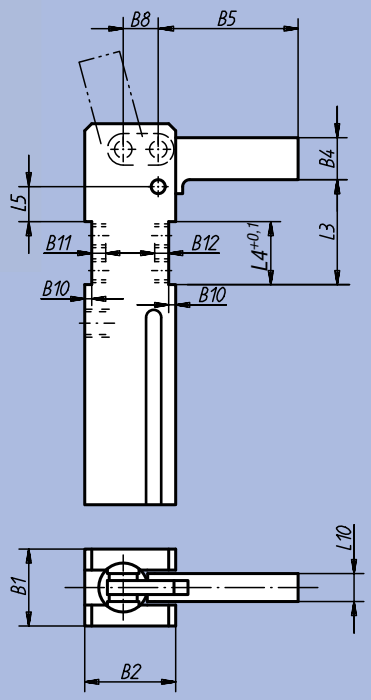

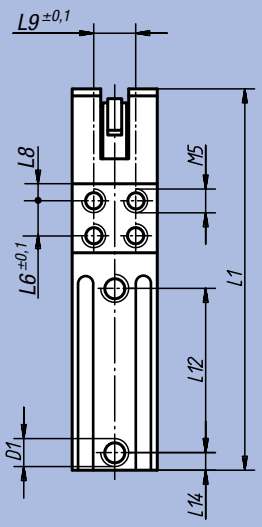

no end-stop detector

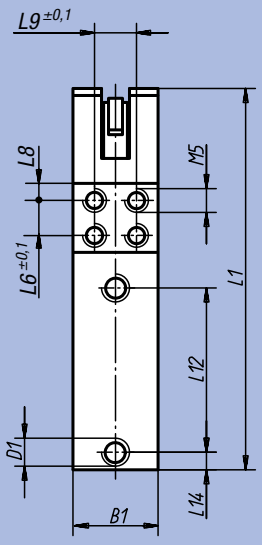

pneumatic end-stop detector

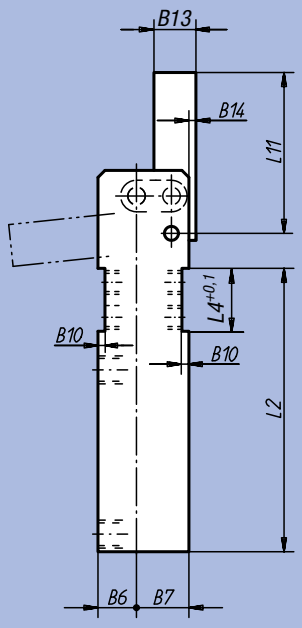

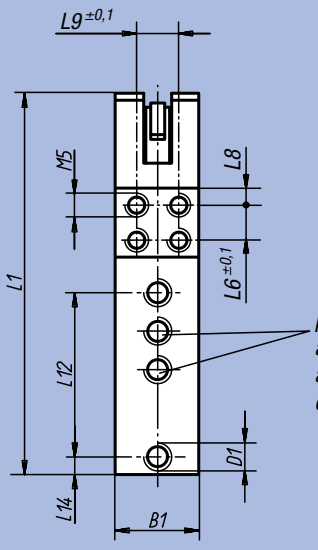

pneumatic detector
at cylinder tube connection M5
adjustable range
opening angle 75° bis 105°

Form A
vertical clamping force
max. opening angle 105°

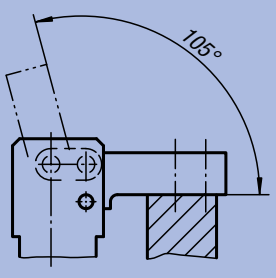

Form B
horizontal clamping force
max. opening angle 96°

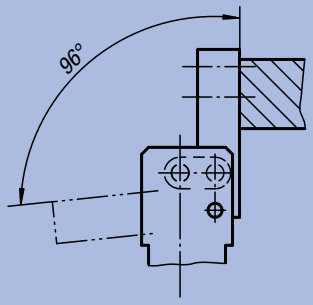

Mini clamps

Tünkers System

Electrical
connection diagram

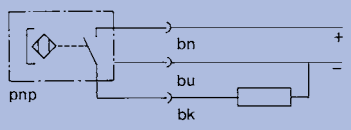

Connection type	PICO
Operating voltage (V)	10...30 VDC
Residual ripple (%)	≦ 10
Own electricity consumption (mA)	≦ 2,0
Constant current (mA)	≦ 120
Switching hysteresis (mm)	≦ 1
Condition display	LED
Permissible environmental temperature (°C)	-25...+70
Protection class (DIN 40 050)	IP 67

Pneumatic
end position feedback

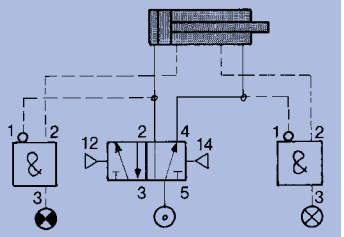

signal
clamp open

Mini clamps with electrical end position feedback

Order No. Form A	Order No. Form B	Size	Clamping force N	Holding force N	B1	B2	B4	B5	B6	B7	B8	B10	B11	B12	B13	B14
05650-050011	05650-050012	2	160	500	26	32	15	50	14	18	12	2,5	5	7	12	2
05650-090011	05650-090012	3	250	900	30	39	18	60	17	22	15	3	6	8	16	3
05650-100011	05650-100012	4	330	1000	35	45	22	75	20	25	18	4	6	8	18	4

Order No. Form A	Order No. Form B	Size	D1	L1	L2	L3	L4	L5	L6	L8	L9	L10	L11	L12	L14	kg
05650-050011	05650-050012	2	M5	123	96	27,5	20	7,5	10	5	16	10	50	57	12	0,300
05650-090011	05650-090012	3	G 1/8	158	120	40	25	14	15	5	20	12	60	69	15	0,500
05650-100011	05650-100012	4	G 1/8	182	136	47	28	17	18	5	25	16	75	80	17,5	0,800

Mini clamps with pneumatic end position feedback

Order No. Form A	Order No. Form B	Size	Clamping force N	Holding force N	B1	B2	B4	B5	B6	B7	B8	B10	B11	B12	B13	B14
05650-050021	05650-050022	2	160	500	26	32	15	50	14	18	12	2,5	5	7	12	2
05650-090021	05650-090022	3	250	900	30	39	18	60	17	22	15	3	6	8	16	3
05650-100021	05650-100022	4	330	1000	35	45	22	75	20	25	18	4	6	8	18	4

Order No. Form A	Order No. Form B	Size	D1	L1	L2	L3	L4	L5	L6	L8	L9	L10	L11	L12	L14	kg
05650-050021	05650-050022	2	M5	123	96	27,5	20	7,5	10	5	16	10	50	57	12	0,300
05650-090021	05650-090022	3	G 1/8	158	120	40	25	14	15	5	20	12	60	69	15	0,500
05650-100021	05650-100022	4	G 1/8	182	136	47	28	17	18	5	25	16	75	80	17,5	0,800

Mini clamps without end position feedback

Order No. Form A	Order No. Form B	Size	Clamping force N	Holding force N	B1	B2	B4	B5	B6	B7	B8	B10	B11	B12	B13	B14
05650-050041	05650-050042	2	160	500	26	32	15	50	14	18	12	2,5	5	7	12	2
05650-090041	05650-090042	3	250	900	30	39	18	60	17	22	15	3	6	8	16	3
05650-100041	05650-100042	4	330	1000	35	45	22	75	20	25	18	4	6	8	18	4

Order No. Form A	Order No. Form B	Size	D1	L1	L2	L3	L4	L5	L6	L8	L9	L10	L11	L12	L14	kg
05650-050041	05650-050042	2	M5	123	96	27,5	20	7,5	10	5	16	10	50	57	12	0,300
05650-090041	05650-090042	3	G 1/8	158	120	40	25	14	15	5	20	12	60	69	15	0,500
05650-100041	05650-100042	4	G 1/8	182	136	47	28	17	18	5	25	16	75	80	17,5	0,800

Swash plates



Material, surface finish:
Star grip: black thermoplastic; bush in galvanised steel, blue chromated; washer: steel 140 HV, natural finish; eye bolt: steel, quality class 8.8, black oxide finish;
hinge pins: tempered steel 1.1181, heat-treated, ground, natural finish

Sample order:
nlm 05660-06050

Note:
The swash plates are delivered unassembled.
Suitable circlips are enclosed.

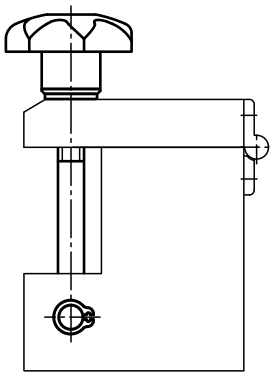

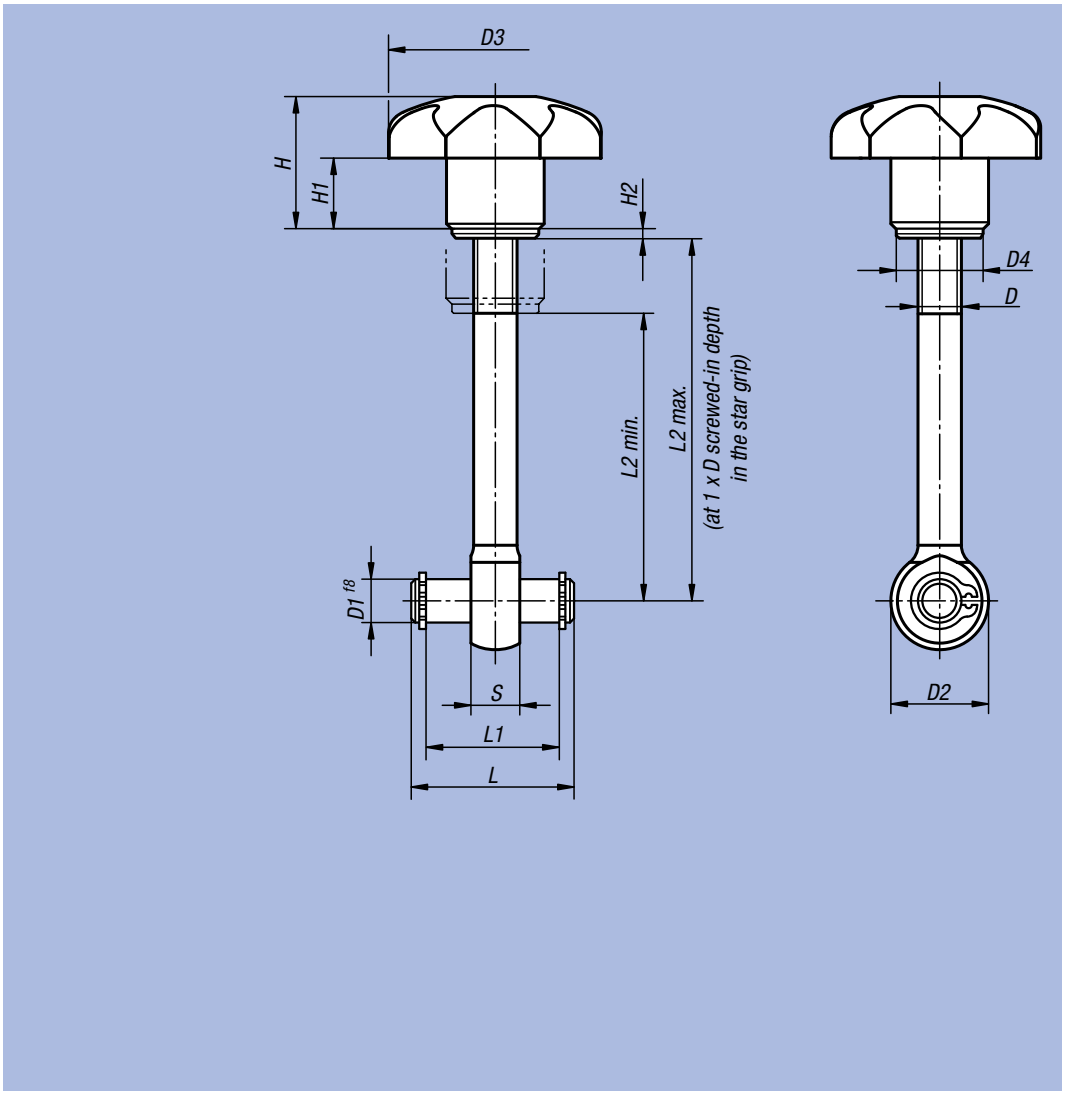

Order No.	D	D1	D2	D3	D4	H	H1	H2	L	L1	L2 min.	L2 max.	S
05660-06050	M6	6	14	32	12	20	10	1,6	22	17	32	44	7
05660-06075	M6	6	14	32	12	20	10	1,6	22	17	57	69	7
05660-08050	M8	8	18	40	16	24	13	1,6	30	25	28	42	9
05660-08075	M8	8	18	40	16	24	13	1,6	30	25	53	67	9
05660-10075	M10	10	20	50	20	31	17	2	37	32	49	65	12
05660-10100	M10	10	20	50	20	31	17	2	37	32	74	90	12

Push-Pull Clamps

heavy-duty model with handle



Material:
Steel;
body and handle in spheroidal graphite cast iron (GJS)

Surface finish:
Phosphated,
plastic handle oil-resistant

Sample order:
nlm 05840-25001

Note:
The Push-Pull Clamps can be locked in open and closed handle positions. Therefore they can be used for push and pull.
The clamps are also equipped with a stroke limiter for advance and retraction strokes.

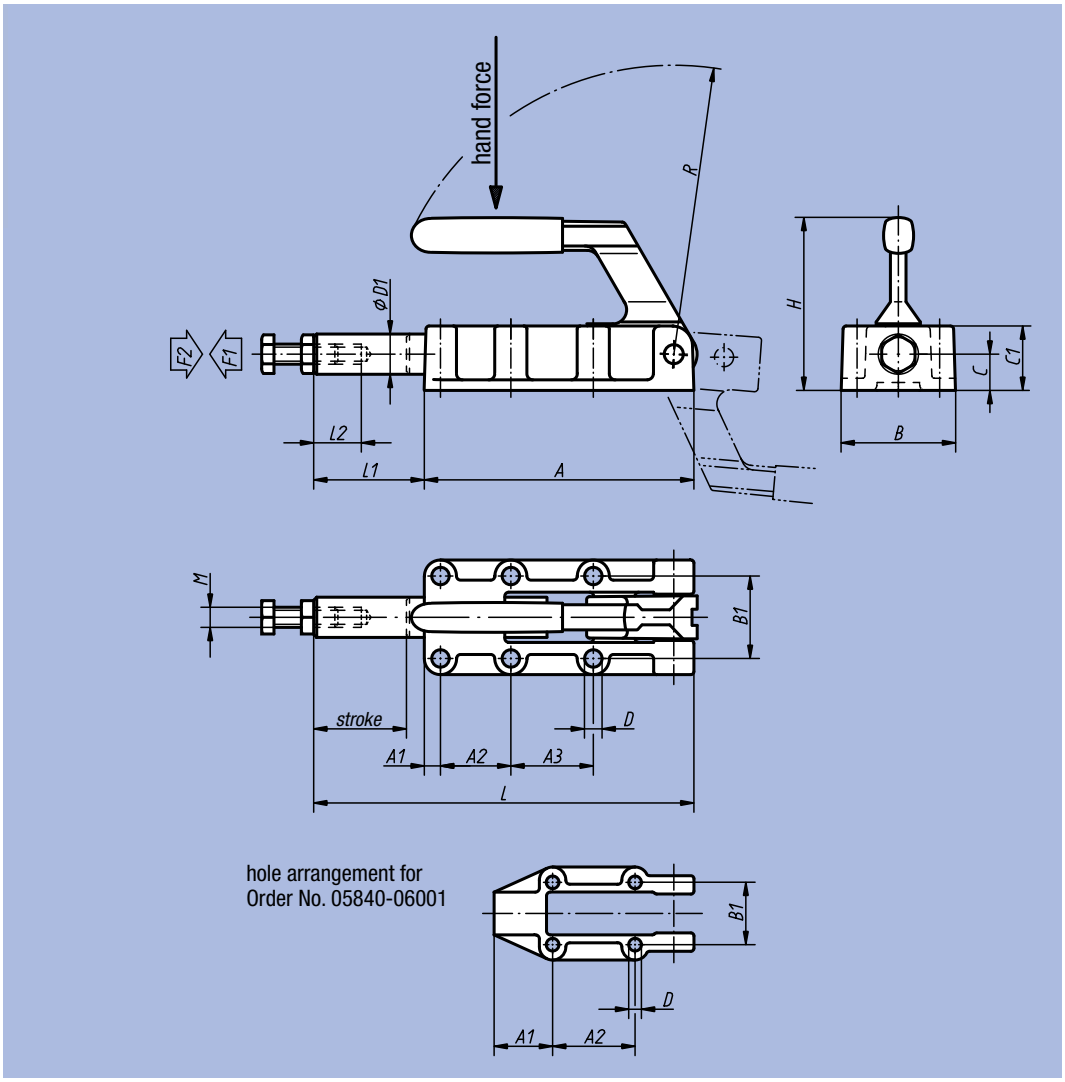

Order No.	A	A1	A2	A3	B	B1	C	C1	D	D1	H	L	L1	L2	M	R	Stroke
05840-06001	89	25	36,5	-	46	33,4	12	23	5,5	14	63	127	38	30	M8	95	32
05840-12001	133	8	35	41	61	41	18	32	8,5	20	88	188	55	40	M10	143	50
05840-25001	197	11	45	45	82	54	22	41	10,3	25	108	300	103	60	M12	200	75
05840-50001	254	10	70	70	85	57	28	50	10,3	30	127	390	136	60	M16	245	100

Order No.	Opening angle of handle	Hand force N	Holding force F2 N	Clamping force F1 N	kg
05840-06001	185°	140	6000	3000	0,484
05840-12001	185°	150	12000	5000	1,400
05840-25001	185°	170	25000	5000	3,766
05840-50001	185°	200	50000	7000	6,254

Rectangular Plastic Grips



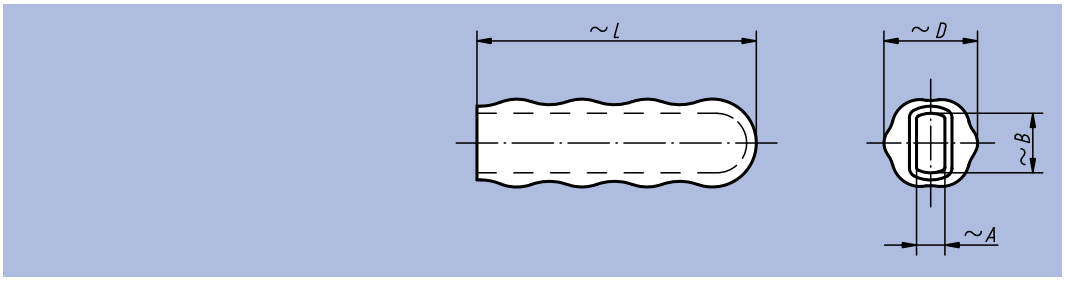

Material:
Plastic

Surface finish:
Orange, oil-resistant

Sample order:
nlm 05882-30

Order No.	~A	~B	~D	~L	≙ g
05882-16	4	8	15	45	5,0
05882-19	6	10	19	53	5,7
05882-20	5	10	20	60	9,5
05882-22	4	13	22	58	11,7
05882-23	5	13	22	60	13,0
05882-28	6	15	26	85	26,0
05882-30	8	17	31	105	44,5
05882-32	8	19	31	105	43,0
05882-33	8	22	32	115	49,0
05882-34	10	22	32	95	38,0
05882-35	10	25	35	120	53,5

Application: welding jig with NORELEM quick-acting clamps

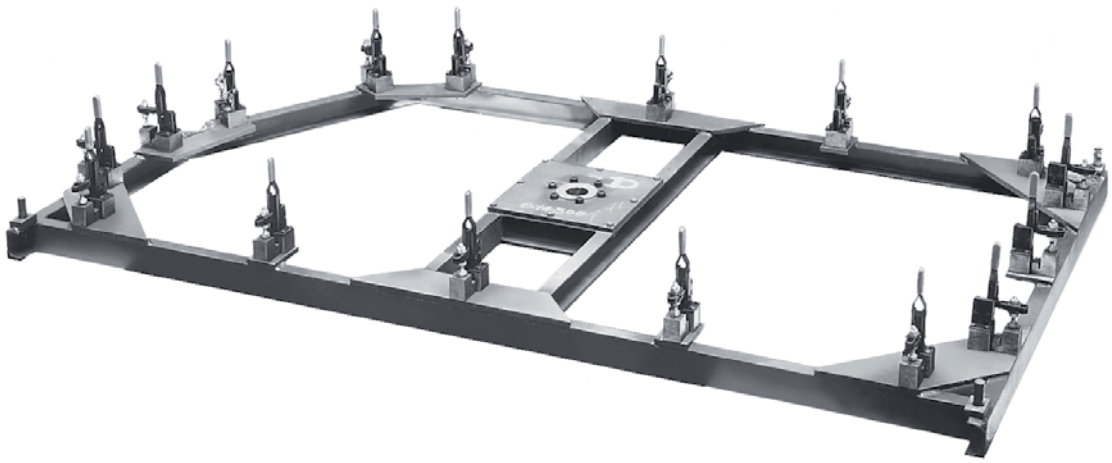

06000

Operating Parts



Knurled Nuts

in steel and stainless steel to DIN 6303



Material, Surface finish:
Free-cutting steel black oxide finish;
stainless steel natural finish
Sample order:
nlm 06010-108

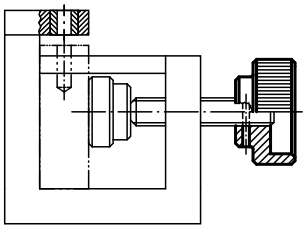

Form A
without pin hole

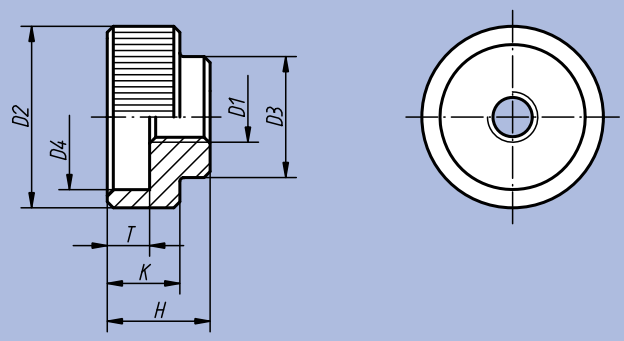

Form B
with pin hole

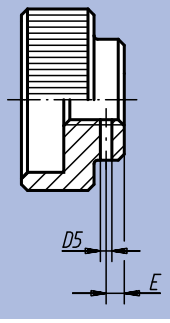

Drill through and
ream pin hole on
assembly

Order No.	Form	Material	D1	D2	D3	D4	D5 predrilled	E	H	K	T	suitable cylindrical pin DIN 7	g
06010-105	A	steel	M5	20	14	15	-	-	12	8	5	-	16
06010-106	A	steel	M6	24	16	18	-	-	14	10	6	-	27
06010-108	A	steel	M8	30	20	24	-	-	17	12	7	-	50
06010-110	A	steel	M10	36	28	30	-	-	20	14	8	-	83
06010-112	A	steel	M12	40	32	34	-	-	24	16	10	-	123
06010-1052	A	stainless steel	M5	20	14	15	-	-	12	8	5	-	16
06010-1062	A	stainless steel	M6	24	16	18	-	-	14	10	6	-	27
06010-1082	A	stainless steel	M8	30	20	24	-	-	17	12	7	-	50
06010-1102	A	stainless steel	M10	36	28	30	-	-	20	14	8	-	83
06010-1122	A	stainless steel	M12	40	32	34	-	-	24	16	10	-	123
06010-205	B	steel	M5	20	14	15	1,4	2,5	12	8	5	1,5 m6 x 14	16
06010-206	B	steel	M6	24	16	18	1,4	2,5	14	10	6	1,5 m6 x 16	27
06010-208	B	steel	M8	30	20	24	1,9	3	17	12	7	2,5 m6 x 20	50
06010-210	B	steel	M10	36	28	30	2,9	4	20	14	8	3,5 m6 x 28	83
06010-212	B	steel	M12	40	32	34	3,9	4	24	16	10	4,5 m6 x 32	123

Plastic Knurled Nuts



Material:
Black duroplastic PF 31;
threaded bush in brass
Surface finish:
Threaded bush nickel-plated
Sample order:
nlm 06013-08

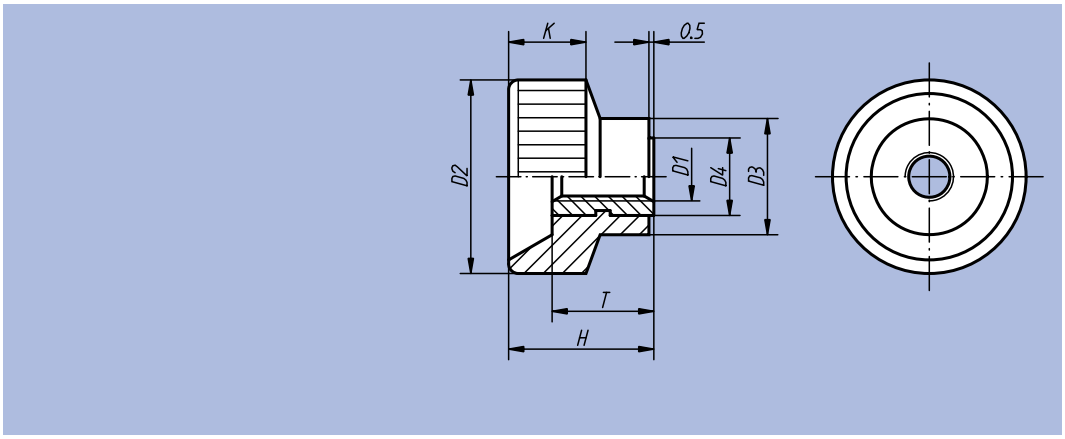

Order No.	D1	D2	D3	D4	H	K	T	g
06013-04	M4	18	10	7	13	8	9	4
06013-05	M5	20	12	8	14	8	10	6
06013-06	M6	24	13	9	16	9	10	7
06013-08	M8	30	15	11	18	11	11	13
06013-10	M10	35	18	14	19	12	11	18

Quick-Acting Knurled Nuts



Material:
Tempered steel
Surface finish:
Heat-treated and black oxide finish
Sample order:
nlm 06030-08
Note:
Quick-Acting Knurled Nuts are mainly used in applications where no high clamping pressures are required. This function is achieved by means of a semilateral thread.

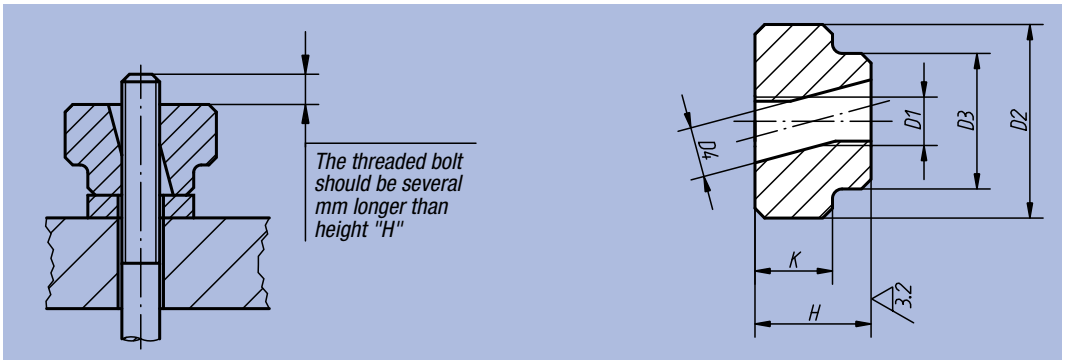

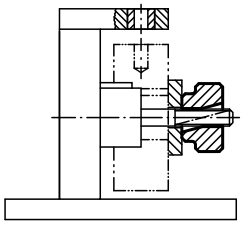

Order No.	D1	D2	D3	D4	H	K	g
06030-05	M5	20	14	5,2	12	8	25
06030-06	M6	24	16	6,2	14	10	38
06030-08	M8	30	20	8,2	17	12	75
06030-10	M10	36	28	10,3	20	14	130
06030-12	M12	40	32	12,3	24	16	185

Knurled Nuts



Material:
Steel
Surface finish:
Black oxide finish
Sample order:
nlm 06070-100

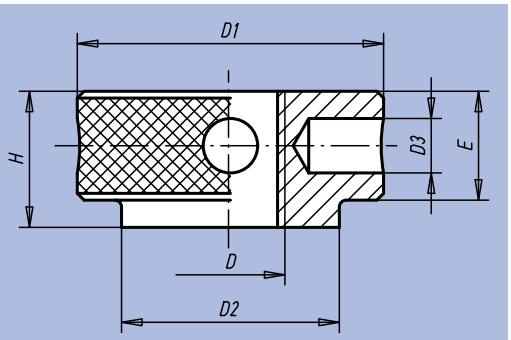

Order No.	D	D1	D2	D3	E	H	kg
06070-100	M10	32	22	4	10	12	0,090
06070-120	M12	36	25	5	13,5	16	0,115
06070-140	M14	40	28	6	15	18	0,210
06070-160	M16	45	32	8	16	20	0,280

Application: universal joint and stop, using NORELEM parts

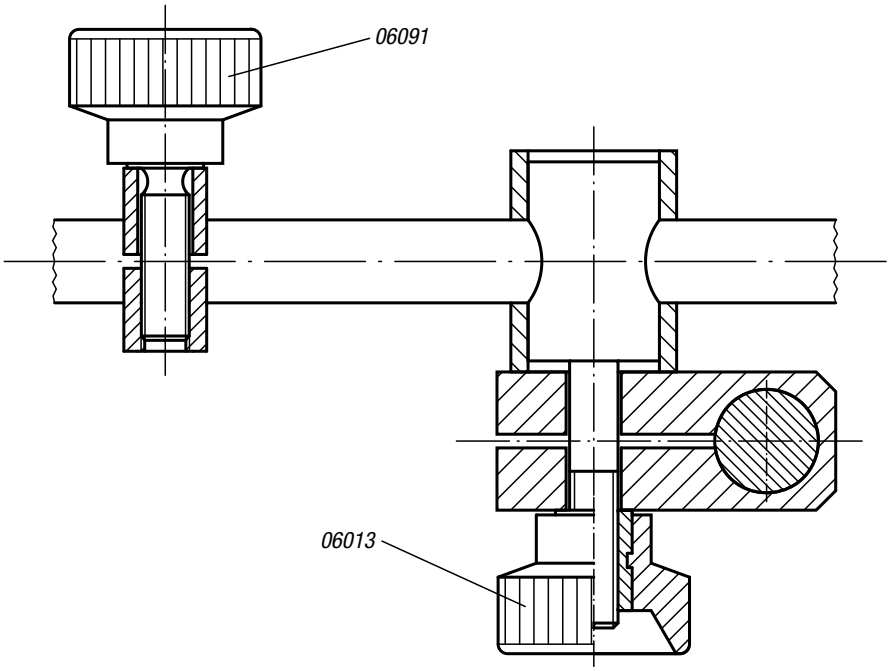

High Knurled Thumb Screws

in steel and stainless steel to DIN 464



Material, Surface finish:
Free-cutting steel black oxide finish;
stainless steel natural finish

Sample order:
nlm 06090-06X20
(please also indicate dimension L)

Note:
* The Knurled Thumb Screw is supplied with shaft in this length (no thread undercut).

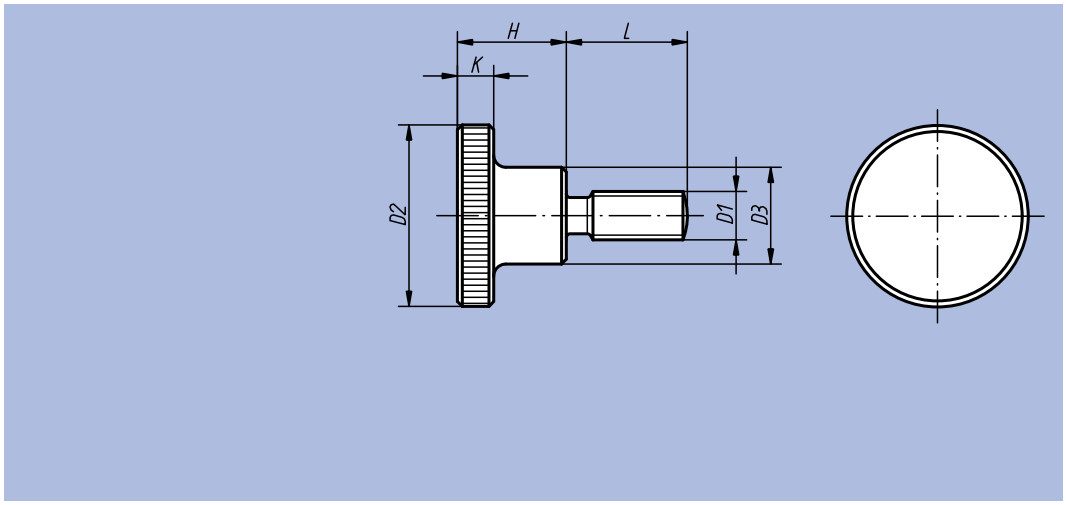

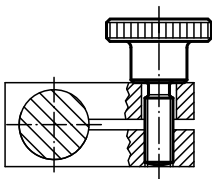

Order No. Material steel	Order No. Material stainless steel	D1	D2	D3	L	H	K
06090-04X	06090-042X	M4	16	8	10 / 16 / 20*	9,5	3,5
06090-05X	06090-052X	M5	20	10	10 / 16 / 20*	11,5	4
06090-06X	06090-062X	M6	24	12	10 / 16 / 20 / 25*	15	5
06090-08X	06090-082X	M8	30	16	16 / 20 / 25 / 30*	18	6
06090-10X	06090-102X	M10	36	20	20 / 25 / 30 / 40*	23	8

Plastic Knurled Thumb Screws



Material:
Black duroplastic PF 31;
threaded bolt in steel

Surface finish:
Threaded bolt galvanized

Sample order:
nlm 06091-05X25
(please also indicate dimension L)

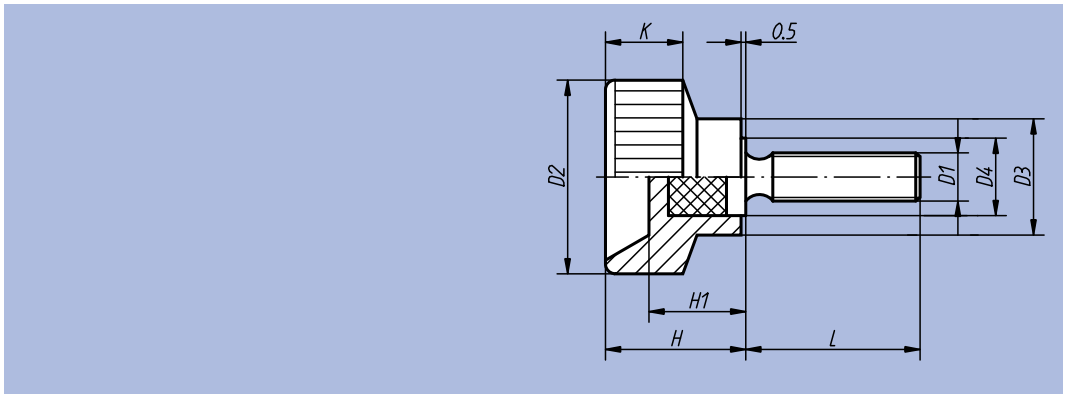

Order No.	L	D1	D2	D3	D4	H	H1	K
06091-04X	15 / 20	M4	18	10	7	13,5	9	8
06091-05X	10 / 18 / 25	M5	20	12	8	14,5	10	8
06091-06X	20 / 28	M6	24	13	10	15	9,5	9
06091-08X	25 / 32	M8	30	15	12	18	11	11
06091-10X	30	M10	35	18	14	18,5	11	12

Knurled Knobs



Material, Surface finish:
Anthracite grey thermoplastic;
bush and threaded bolt in steel 5.8, blue chromated or stainless steel 1.4305 natural finish

Sample order:
nlm 06092-01056X20
(knob cap colour traffic red;
please also indicate dimension L)

Note:
Δ Add the desired knob cap colour here; no colour code is required with anthracite grey knob caps.

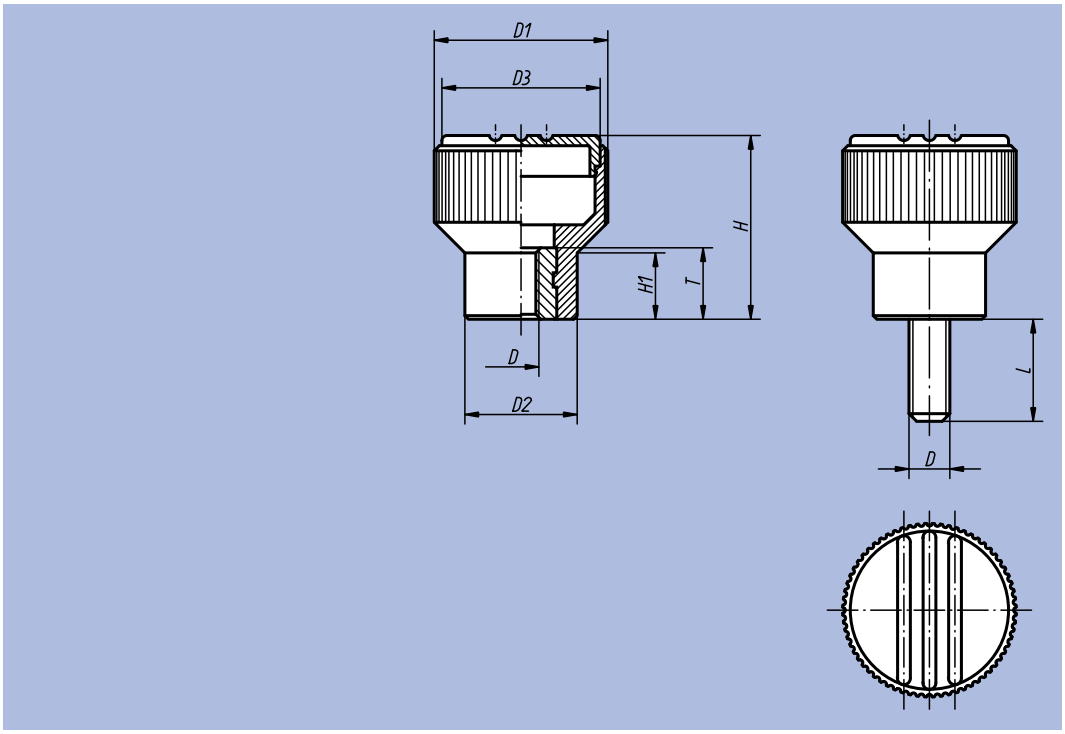

anthracite grey	light grey Δ = 5	traffic red Δ = 6	bright yellow Δ = 7
RAL 7021	RAL 7035	RAL 3020	RAL 1021

Knurled Knobs with internal thread

Order No. Surface finish bush in steel	Order No. Surface finish bush in stainless steel	Size	D	D1	D2	D3	H	H1	T
06092-104Δ	06092-0104Δ	1	M4	21	14	19	22	8	10
06092-105Δ	06092-0105Δ	1	M5	21	14	19	22	8	10
06092-106Δ	06092-0106Δ	1	M6	21	14	19	22	8	10
06092-208Δ	06092-0208Δ	2	M8	26	18	23	26	9,5	14
06092-308Δ	06092-0308Δ	3	M8	34	22	31	36	13	14
06092-310Δ	06092-0310Δ	3	M10	34	22	31	36	13	14

Knurled Knobs with external thread

Order No. Surface finish bolt in steel	Order No. Surface finish bolt in stainless steel	Size	D	D1	D2	D3	H	H1	L = screw length
06092-105ΔX	06092-0105ΔX	1	M5	21	14	19	22	8	10 / 15 / 20 / 25
06092-106ΔX	06092-0106ΔX	1	M6	21	14	19	22	8	15 / 20 / 25 / 30
06092-208ΔX	06092-0208ΔX	2	M8	26	18	23	26	9,5	20 / 25 / 30 / 40
06092-310ΔX	06092-0310ΔX	3	M10	34	22	31	36	13	20 / 30 / 40

Graduated Knobs



Material, Surface finish:
Anthracite grey thermoplastic; steel parts blue chromated

Sample order:
nlm 06100-11055
(knob cap colour light grey)

Note:
Available without scale marks, with one graduation mark or on the other hand with 20 scale marks and 10 digits.

Δ Add the desired knob cap colour here; no colour code is required with anthracite grey knob caps.

On request:
Special scale marks.

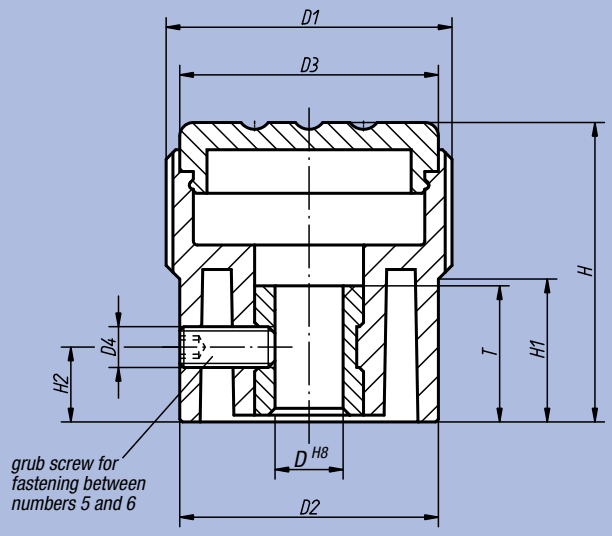

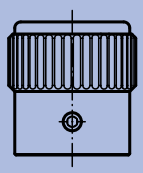

Form A
without
scale marks

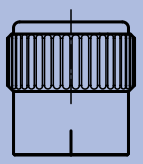

Form B
with graduation
mark

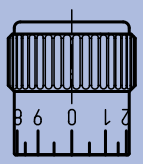

Form C
with standard
scale marks

anthracite grey	light grey Δ = 5	traffic red Δ = 6	bright yellow Δ = 7
 RAL 7021	 RAL 7035	 RAL 3020	 RAL 1021

Order No.	Form	Size	D	D1	D2	D3	D4	H	H1	H2	T	kg
06100-1105Δ	A	1	5	21	19	19	M3	22	10,5	5	10	0,011
06100-1206Δ	A	2	6	26	23	23	M3	26	12	6	10	0,023
06100-1308Δ	A	3	8	34	31	31	M4	36	17,5	7	14	0,032
06100-2105Δ	B	1	5	21	19	19	M3	22	10,5	5	10	0,011
06100-2206Δ	B	2	6	26	23	23	M3	26	12	6	10	0,023
06100-2308Δ	B	3	8	34	31	31	M4	36	17,5	7	14	0,032
06100-3105Δ	C	1	5	21	19	19	M3	22	10,5	5	10	0,011
06100-3206Δ	C	2	6	26	23	23	M3	26	12	6	10	0,023
06100-3308Δ	C	3	8	34	31	31	M4	36	17,5	7	14	0,032

Adjusting Knobs



Material, Surface finish:
Knurled Knob in anthracite grey thermoplastic;
disc in black anodized aluminium

Sample order:
nlm 06105-1055
(knob cap colour light grey)

Note:
Arrow mark engraved after anodizing, the grub screw secures both the hub and the disc. Hub hole H7 guarantees a good, tight fit on the shaft.

Δ Add the desired knob cap colour here; no colour code is required with anthracite grey knob caps.

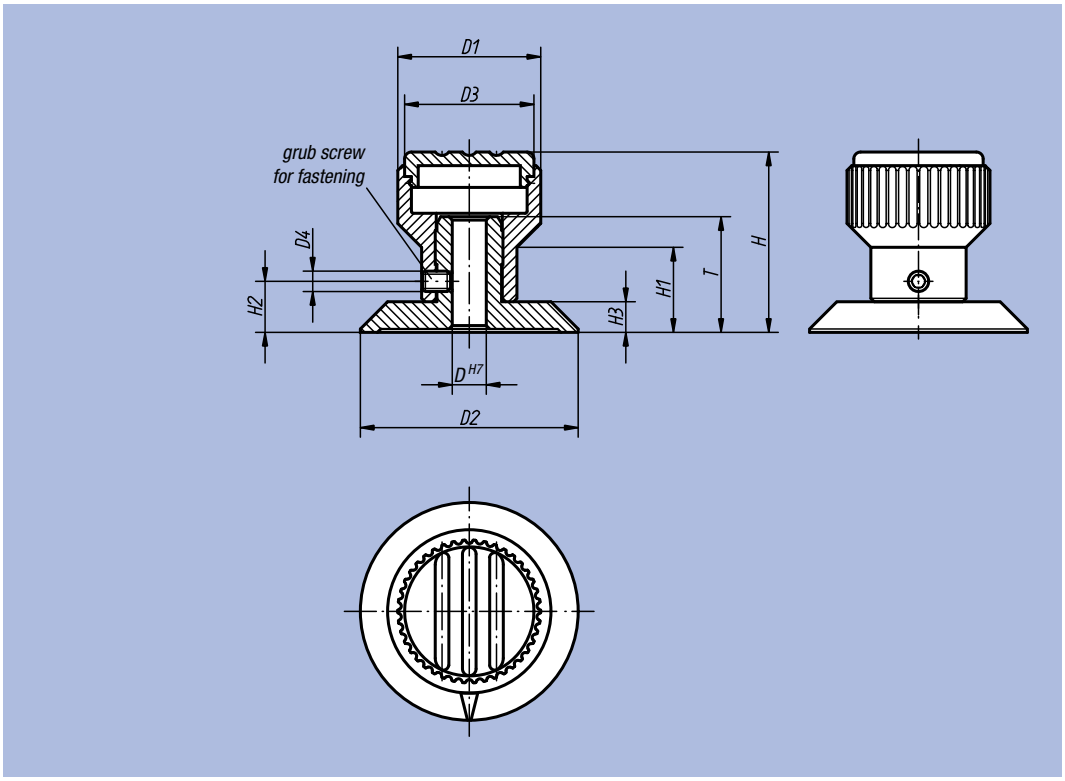

anthracite grey	light grey Δ = 5	traffic red Δ = 6	bright yellow Δ = 7
RAL 7021	RAL 7035	RAL 3020	RAL 1021

Order No.	Size	D	D1	D2	D3	D4	H	H1	H2	H3	T	kg
06105-105Δ	1	5	21	32	19	M3	26,5	12,5	7,5	4,5	17	0,010
06105-206Δ	2	6	26	40	23	M4	31,5	15	9,5	5,5	20,5	0,021
06105-308Δ	3	8	34	52	31	M4	43	20	12	7	22	0,026

High Knurled Nuts

in steel and stainless steel to DIN 466



Material, Surface finish:
Free-cutting steel 1.0711
black oxide finish;
stainless steel natural finish

Sample order:
nlm 06110-04

Note:
High Knurled Nuts M12 are not provided on the official standard specification sheet.

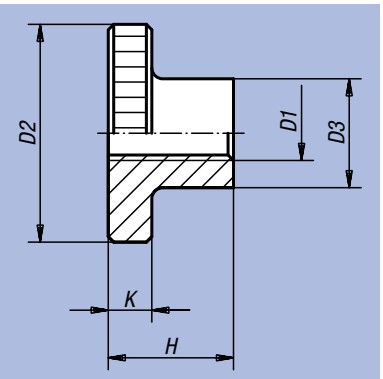

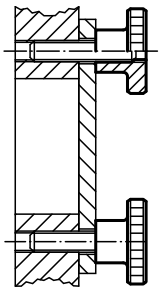

Order No. Material steel	Order No. Material stainless steel	D1	D2	D3	H	K	◻g
06110-04	06110-042	M4	16	8	9,5	3,5	7
06110-05	06110-052	M5	20	10	11,5	4	13
06110-06	06110-062	M6	24	12	15	5	24
06110-08	06110-082	M8	30	16	18	6	46
06110-10	06110-102	M10	36	20	23	8	88
06110-12	06110-122	M12	36	20	23	8	125

Thin Knurled Nuts

in steel and stainless steel to DIN 467



Material, Surface finish:
Free-cutting steel 1.0711
black oxide finish;
stainless steel natural finish.

Sample order:
nlm 06120-042

Note:
Thin Knurled Nuts M12 are not provided on the official standard specification sheet.

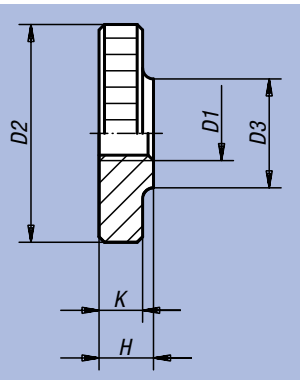

Order No. Material steel	Order No. Material stainless steel	D1	D2	D3	H	K	◻g
06120-04	06120-042	M4	16	8	4	3,5	6
06120-05	06120-052	M5	20	10	5	4	10
06120-06	06120-062	M6	24	12	6	5	18
06120-08	06120-082	M8	30	16	8	6	33
06120-10	06120-102	M10	36	20	10	8	58
06120-12	06120-122	M12	36	20	10	8	58

Knurled Knobs



Material:
Tempered steel
Surface finish:
Heat-treated and black oxide finish
Sample order:
nlm 06130-061X50

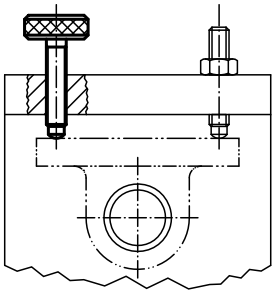

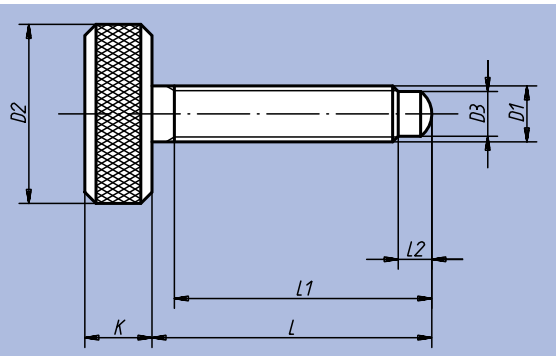

Order No.	D1	D2	D3	L	L1	L2	K	g
06130-05X25	M5	16	4	25	23	3	6	8
06130-051X40	M5	16	4	40	38	3	6	14
06130-06X35	M6	18	4,5	35	33	3,5	7	10
06130-061X50	M6	18	4,5	50	48	3,5	7	19
06130-062X70	M6	18	4,5	70	68	3,5	7	25
06130-08X45	M8	20	6	45	42	5	8	20
06130-081X60	M8	20	6	60	57	5	8	34
06130-10X45	M10	25	7,5	45	42	5,5	10	35
06130-101X60	M10	25	7,5	60	57	5,5	10	45

Knurled Heads

for hexagon socket screw



Material:
Thermoplastic
Surface finish:
Black, grey or red
Sample order:
nlm 06132-0506
(knurled head colour red)
Colour Code:
5 = grey
6 = red
Note:
Suitable screws see 07160.

Δ Add the desired knurled head colour here; no colour code is required with black knurled head.

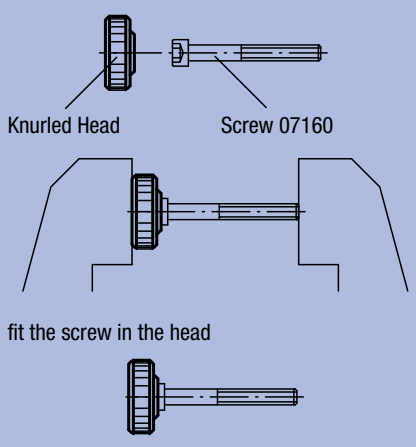

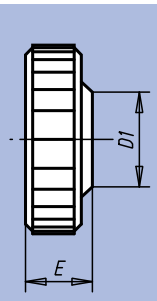

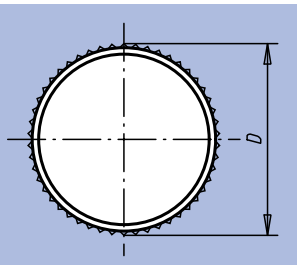

Order No.	D	D1	E	for hexagon socket screw	kg
06132-030Δ	9,5	8,3	4,5	M3	0,040
06132-040Δ	13	9,6	5,5	M4	0,060
06132-050Δ	16	11,5	6,5	M5	0,070
06132-060Δ	19	13	7,5	M6	0,130
06132-061Δ	26	13	7,8	M6	0,180
06132-080Δ	26	16	9,8	M8	0,300

Butterfly Heads

for hexagon socket screw



Material:
Thermoplastic.
Surface finish:
Black, grey or red
Sample order:
nlm 06133-0506
(butterfly head colour red)
colour code:
5 = grey
6 = red
Note:
Suitable screws see 07160.

Δ Add the desired butterfly head colour here; no colour code is required with black butterfly head

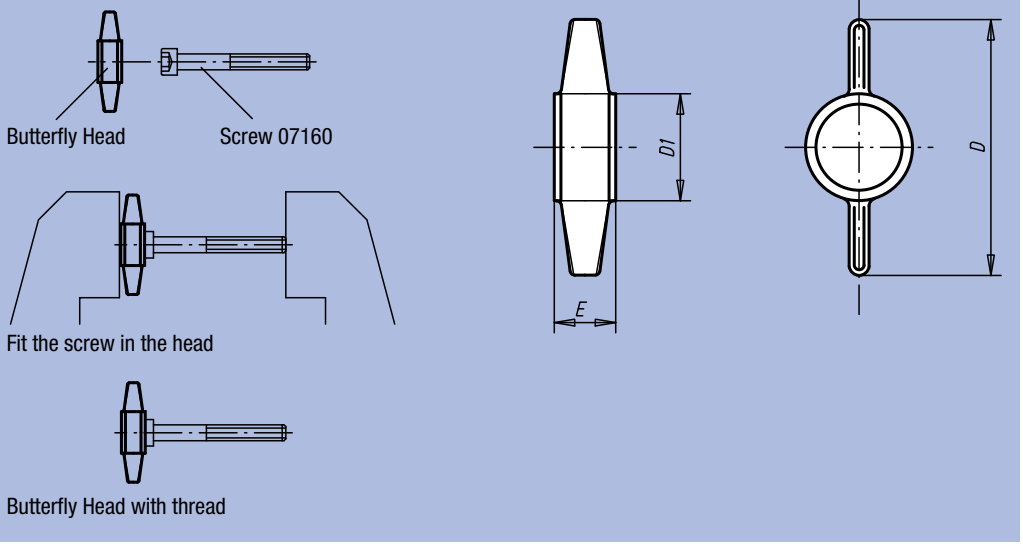

Order No.	D	D1	E	for hexagon socket screw	kg/100
06133-050Δ	26	12	6,6	M5	0,104
06133-060Δ	30	13,5	7,8	M6	0,130
06133-080Δ	38	16,5	10	M8	0,290
06133-100Δ	45	20	12,5	M10	0,405

Disc Grips

for hex sockets screw



Material:
Thermoplastic
Surface finish:
Black or grey
Sample order:
nlm 06134-0805
(disc grip colour grey)
Colour Code:
5 = grey
Note:
Suitable screws see 07160.

Δ Add the desired disc grip colour here; no colour code is required with black disc grip.

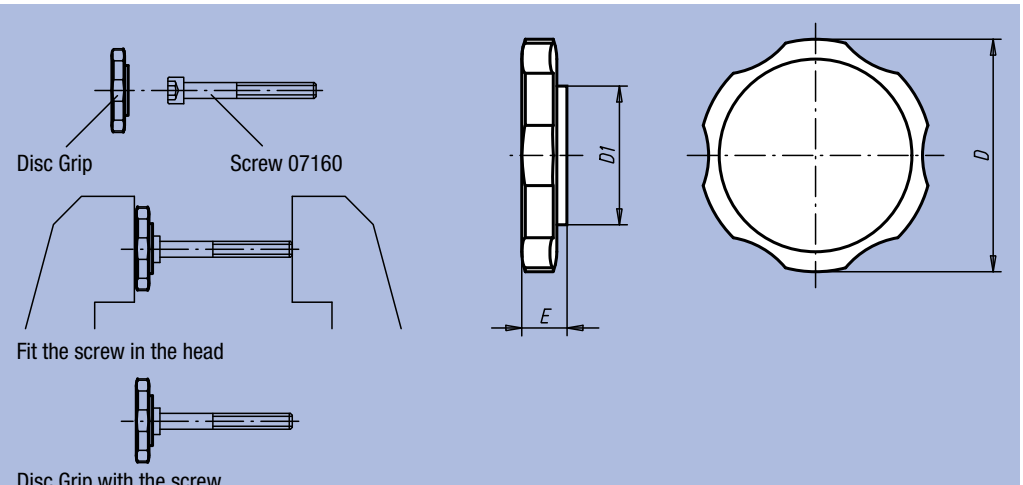

Order No.	D	D1	E	for hexagon socket screw	kg
06134-060Δ	38	13	9,7	M6	0,565
06134-080Δ	38	16	10	M8	0,650
06134-100Δ	38	19,5	12,5	M10	0,780

Thommy Bars

with fixed or movable spindel to DIN 6305 or DIN 6307



Material:
Steel

Surface finish:
Black oxide finish

Sample order:
nlm 06140-210

Note:
Tommy Bars with mobile spindles have a moving spindle that is held by a compression spring in each desired position. Stop-rings are used to limit the movement. For fixed spindles, the spindle is press fitted.

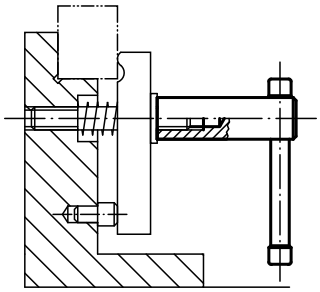

with fixed spindel

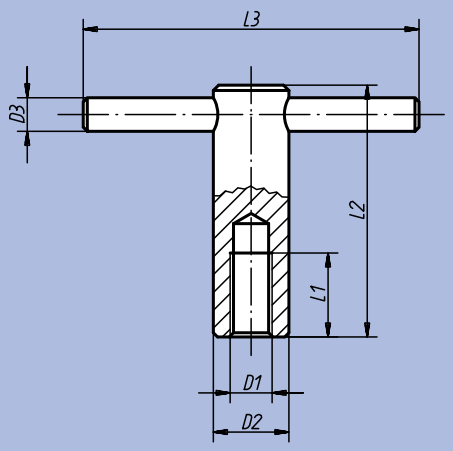

with mobile spindel

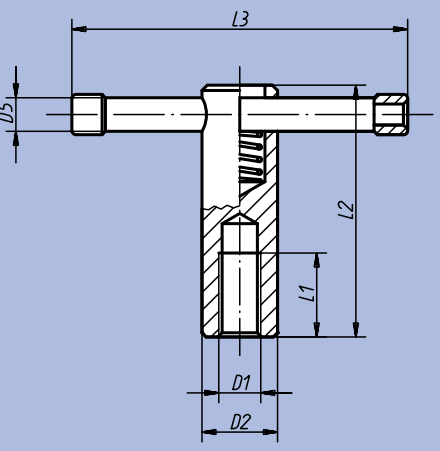

Order No.	Surface finish	D1	D2	D3	D5	L1	L2	L3	kg
06140-110	with fixed spindel	M10	18	8	8	20	60	80	0,125
06140-112	with fixed spindel	M12	20	10	10	25	70	100	0,190
06140-116	with fixed spindel	M16	24	12	13	35	85	120	0,340
06140-120	with fixed spindel	M20	30	16	16	40	95	140	0,600
06140-210	with movable spindel	M10	18	8	8	20	60	80	0,115
06140-212	with movable spindel	M12	20	10	10	25	70	100	0,185
06140-216	with movable spindel	M16	24	12	13	35	85	120	0,330
06140-220	with movable spindel	M20	30	16	16	40	95	140	0,590

Pad Screws

with fixed or movable spindel to DIN 6304 or DIN 6306



Material:
Steel

Surface finish:
Black oxide finish; pad hardened

Sample order:
nlm 06150-116X90

Note:
Pad Bars with mobile spindles have a moving spindle that is held by a compression spring in each desired position. Stop-rings are used to limit the movement. For fixed spindles, the spindle is press fitted.

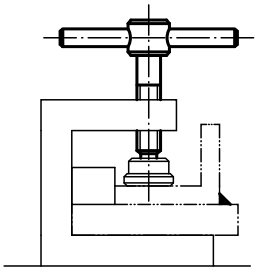

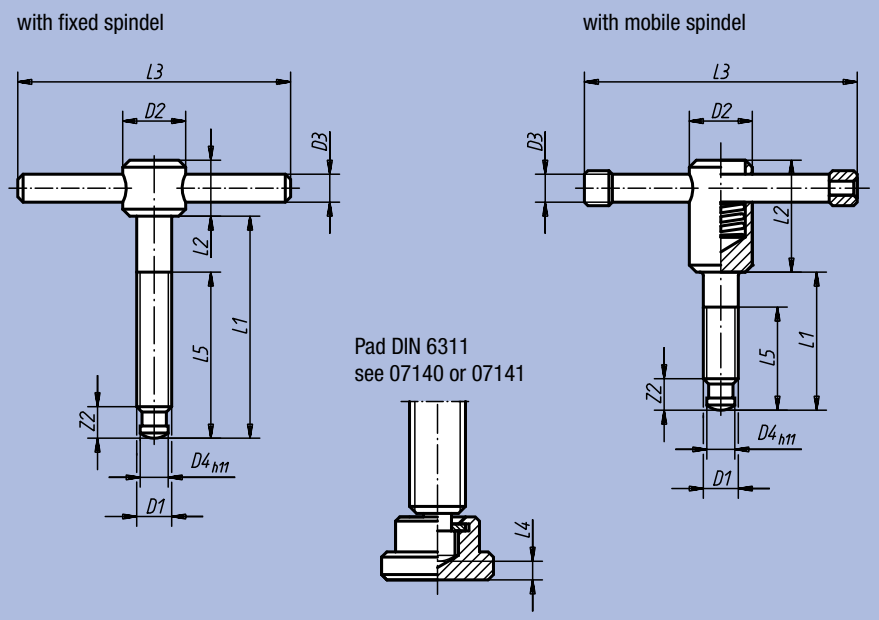

Order No.	Surface finish	L1	D1	D2	D3	D4	L2	L3	L4	L5	Z2	kg
06150-106X40	with fixed spindel	40	M6	12	5	4,5	10	50	2,2	30	6	0,021
06150-106X50	with fixed spindel	50	M6	12	5	4,5	10	50	2,2	40	6	0,023
06150-108X50	with fixed spindel	50	M8	14	6	6	12	60	3	35	7,5	0,040
06150-108X60	with fixed spindel	60	M8	14	6	6	12	60	3	45	7,5	0,045
06150-110X60	with fixed spindel	60	M10	18	8	8	14	80	3,6	40	9	0,080
06150-110X70	with fixed spindel	70	M10	18	8	8	14	80	3,6	50	9	0,085
06150-112X70	with fixed spindel	70	M12	20	10	8	18	100	4,5	50	10	0,140
06150-112X80	with fixed spindel	80	M12	20	10	8	18	100	4,5	60	10	0,145
06150-116X75	with fixed spindel	75	M16	24	12	12	20	120	5,3	55	12	0,260
06150-116X90	with fixed spindel	90	M16	24	12	12	20	120	5,3	70	12	0,285
06150-116X110	with fixed spindel	110	M16	24	12	12	20	120	5,3	90	12	0,310
06150-120X75	with fixed spindel	75	M20	30	16	15,5	28	140	5,6	55	14	0,470
06150-120X90	with fixed spindel	90	M20	30	16	15,5	28	140	5,6	70	14	0,500
06150-120X110	with fixed spindel	110	M20	30	16	15,5	28	140	5,6	90	14	0,540
06150-210X40	with movable spindel	40	M10	18	8	8	32	80	3,6	30	9	0,093
06150-210X50	with movable spindel	50	M10	18	8	8	32	80	3,6	40	9	0,097
06150-212X50	with movable spindel	50	M12	20	10	8	35	100	4,5	40	10	0,160
06150-212X60	with movable spindel	60	M12	20	10	8	35	100	4,5	50	10	0,165
06150-216X55	with movable spindel	55	M16	24	13	12	40	120	5,3	45	12	0,300
06150-216X70	with movable spindel	70	M16	24	13	12	40	120	5,3	60	12	0,320
06150-216X90	with movable spindel	90	M16	24	13	12	40	120	5,3	80	12	0,350
06150-220X55	with movable spindel	55	M20	30	16	15,5	45	140	5,6	45	14	0,520
06150-220X70	with movable spindel	70	M20	30	16	15,5	45	140	5,6	60	14	0,550
06150-220X90	with movable spindel	90	M20	30	16	15,5	45	140	5,6	80	14	0,590

Notes:

Aluminium Palm Grips

similar to DIN 6335



Material:
Aluminium.

Surface finish:
Natural finish tumbled
or ground and polished

Sample order:
nlm 06156-104008

On request:
Palm Grips as blanks (deburred).

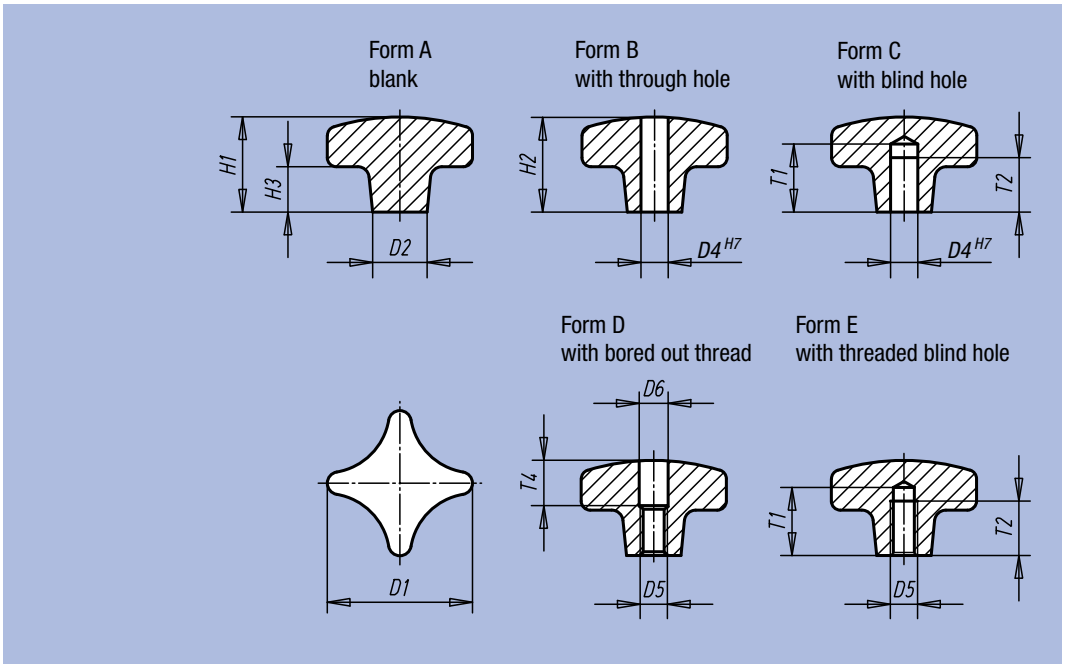

Order No.	Surface finish	Form	D1	D2	H1	H3	kg
06156-104008	tumbled	A	40	14	26	14	0,030
06156-105010	tumbled	A	50	18	34	20	0,060
06156-106312	tumbled	A	63	20	42	25	0,090
06156-108016	tumbled	A	80	25	52	30	0,180

Order No. Surface finish tumbled	Order No. Surface finish polished	Form	D1	D2	D4	H2	H3
06156-204008	06156-2040082	B	40	14	8	25	14
06156-205010	06156-2050102	B	50	18	10	32	20
06156-206312	06156-2063122	B	63	20	12	40	25
06156-208016	06156-2080162	B	80	25	16	50	30

Order No. Surface finish tumbled	Order No. Surface finish polished	Form	D1	D2	D4	H1	H3	T1	T2
06156-304008	06156-3040082	C	40	14	8	26	14	18	15
06156-305010	06156-3050102	C	50	18	10	34	20	21	18
06156-306312	06156-3063122	C	63	20	12	42	25	25	22
06156-308016	06156-3080162	C	80	25	16	52	30	32	28

Order No. Surface finish tumbled	Order No. Surface finish polished	Form	D1	D2	D5	D6	H2	H3	T4
06156-404008	06156-4040082	D	40	14	M8	8,4	25	14	12
06156-405010	06156-4050102	D	50	18	M10	10,5	32	20	16
06156-406312	06156-4063122	D	63	20	M12	13	40	25	20
06156-408016	06156-4080162	D	80	25	M16	17	50	30	30

Order No. Surface finish tumbled	Order No. Surface finish polished	Form	D1	D2	D5	H1	H3	T1	T2
06156-504008	06156-5040082	E	40	14	M8	26	14	18	15
06156-505010	06156-5050102	E	50	18	M10	34	20	21	18
06156-506312	06156-5063122	E	63	20	M12	42	25	25	22
06156-508016	06156-5080162	E	80	25	M16	52	30	32	28

Palm Grips

in stainless steel, similar to DIN 6335



Material:
Stainless steel 1.4308

Surface finish:
Ground and polished

Sample order:
nlm 06158-2032062

On request:
Palm Grips in stainless steel with external thread.

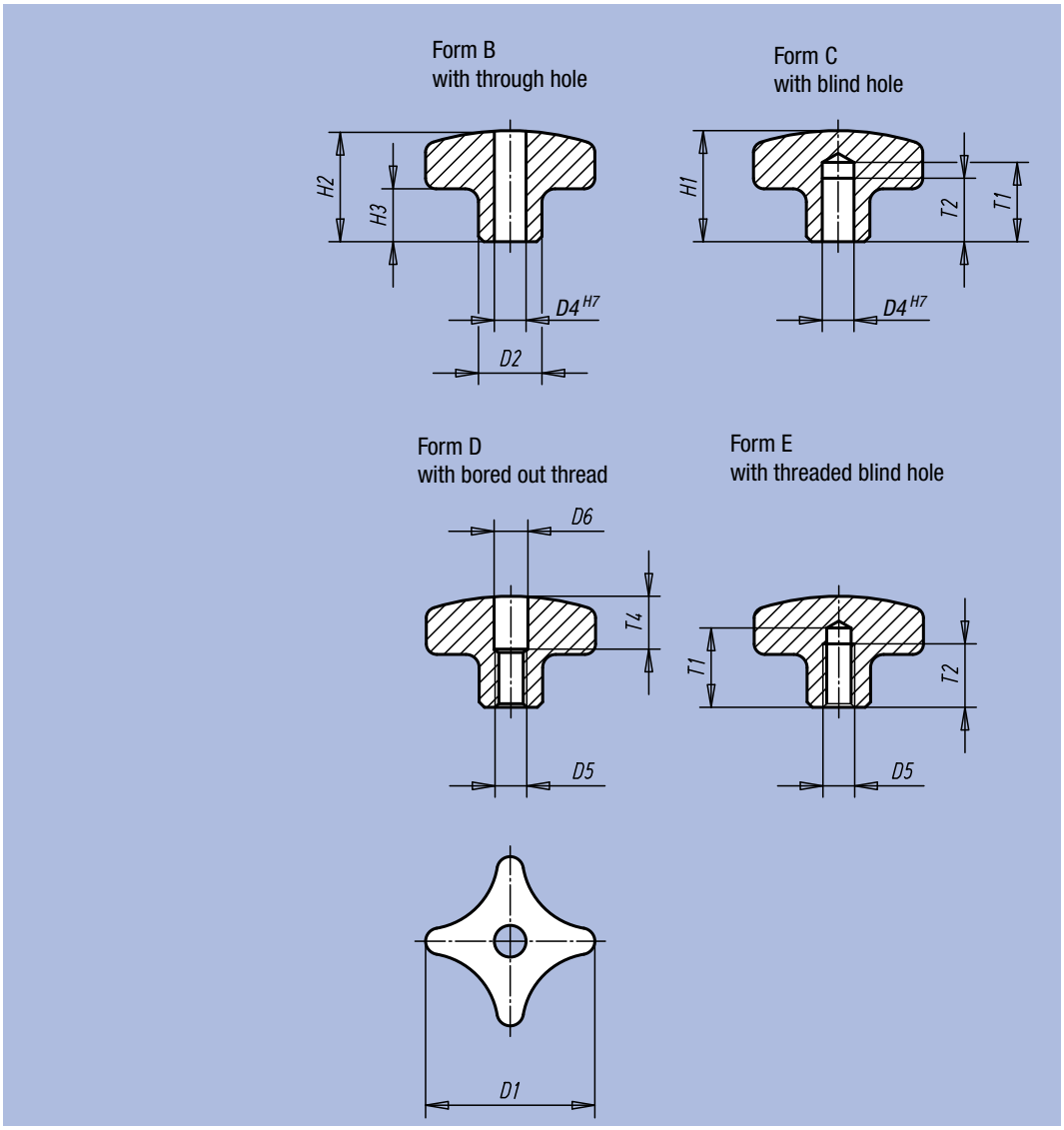

Order No. Form B	Order No. Form C	Surface finish	D1	D2	D4	H1	H2	H3	T1	T2
06158-2032062	06158-3032062	polished	32	12	6	21	20	10	15	12
06158-2040082	06158-3040082	polished	40	14	8	26	25	13	18	15
06158-2050102	06158-3050102	polished	50	18	10	34	32	17	21	18
06158-2063122	06158-3063122	polished	63	20	12	42	40	21	25	22

Order No. Form D	Order No. Form E	Surface finish	D1	D2	D5	D6	H1	H2	H3	T1	T2	T4
06158-4032062	06158-5032062	polished	32	12	M6	6,4	21	20	10	15	12	10
06158-4040082	06158-5040082	polished	40	14	M8	8,4	26	25	13	18	15	12
06158-4050102	06158-5050102	polished	50	18	M10	10,5	34	32	17	21	18	16
06158-4063122	06158-5063122	polished	63	20	M12	13	42	40	21	25	22	20

Grey Cast Iron Palm Grips

DIN 6335



Material:
Grey cast iron GJL 200

Surface finish:
Natural finish tumbled

Sample order:
nlm 06160-106

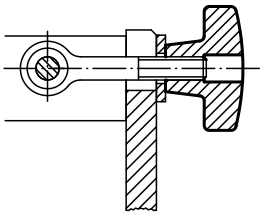

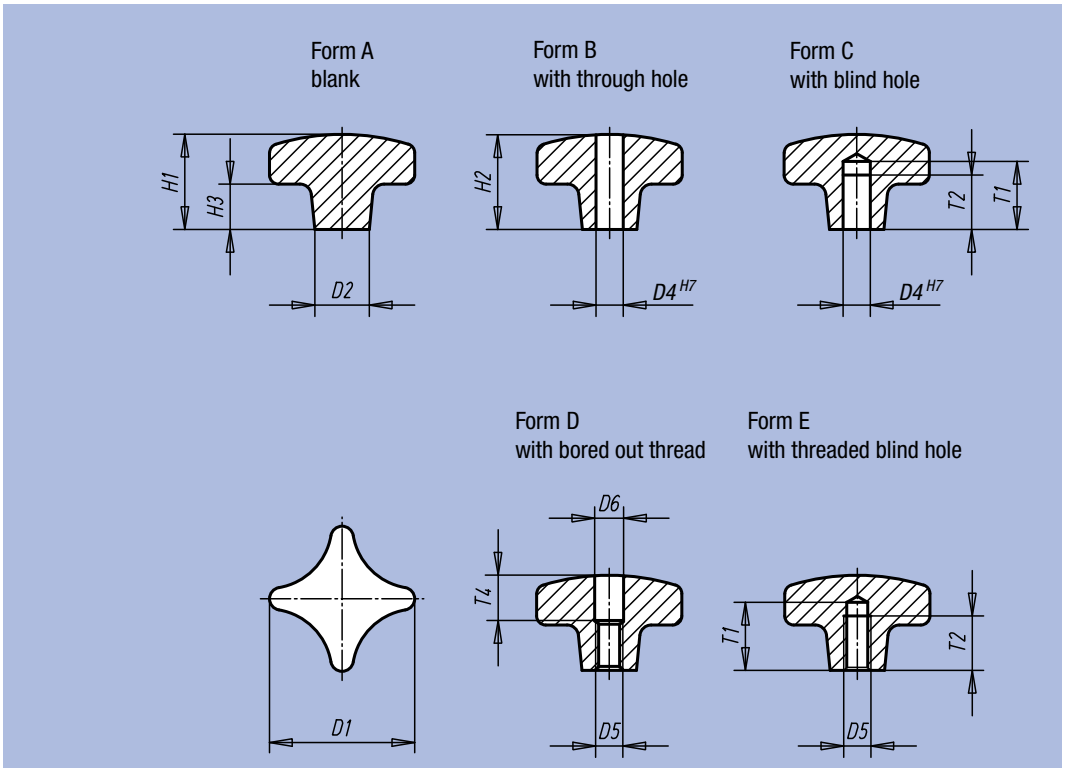

Order No. Form A	Order No. Form B	Surface finish	D1	D2	D4	H1	H2	H3
06160-106	06160-206	tumbled	32	12	6	21	20	10
06160-108	06160-208	tumbled	40	14	8	26	25	14
06160-110	06160-210	tumbled	50	18	10	34	32	20
06160-112	06160-212	tumbled	63	20	12	42	40	25
06160-116	06160-216	tumbled	80	25	16	52	50	30
06160-120	06160-220	tumbled	100	32	20	65	63	38

Order No. Form C	Order No. Form D	Order No. Form E	Surface finish	D1	D2	D4	D5	D6	H1	H2	H3	T1	T2	T4
06160-306	06160-406	06160-506	tumbled	32	12	6	M6	6,4	21	20	10	15	12	10
06160-308	06160-408	06160-508	tumbled	40	14	8	M8	8,4	26	25	14	18	15	12
06160-310	06160-410	06160-510	tumbled	50	18	10	M10	10,5	34	32	20	21	18	16
06160-312	06160-412	06160-512	tumbled	63	20	12	M12	13	42	40	25	25	22	20
06160-316	06160-416	06160-516	tumbled	80	25	16	M16	17	52	50	30	32	28	30
06160-320	06160-420	06160-520	tumbled	100	32	20	M20	21	65	63	38	40	36	38

Four Lobe Palm Grips in grey cast iron

plastic coated conforms to DIN 6335



Material:
Grey cast iron GJL 200

Surface finish:
Plastic coated

Sample order:
nlm 06161-212

Note:
Orange: RAL 2004
Black: RAL 9005 matt

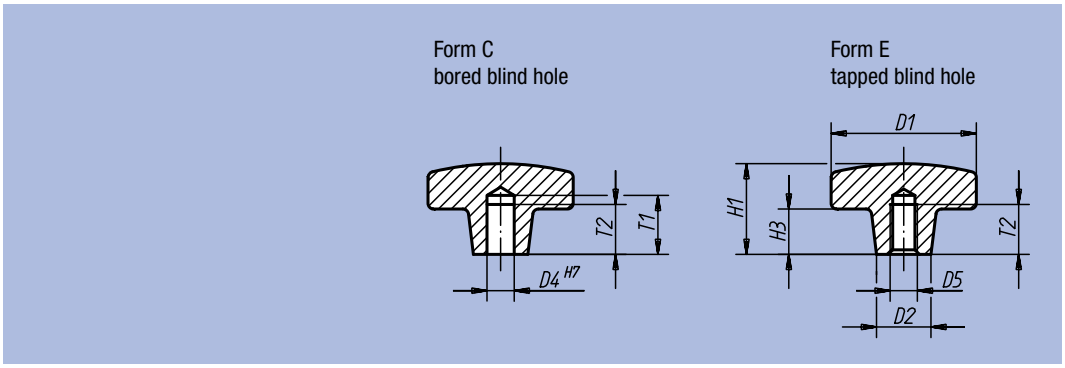

Order No. colour orange	Order No. colour black matt	Form	D1	D2	D4	D5	H1	H3	T1	T2	kg
06161-108	06161-208	C	40	14	8	-	26	14	18	15	0,055
06161-110	06161-210	C	50	18	10	-	34	20	21	18	0,105
06161-112	06161-212	C	63	20	12	-	42	25	25	22	0,195
06161-116	06161-216	C	80	25	16	-	52	30	32	28	0,380
06161-308	06161-408	E	40	14	-	M8	26	14	-	15	0,055
06161-310	06161-410	E	50	18	-	M10	34	20	-	18	0,105
06161-312	06161-412	E	63	20	-	M12	42	25	-	22	0,195
06161-316	06161-416	E	80	25	-	M16	52	30	-	28	0,380

Four Lobe Palm Grips in grey cast iron

plastic pressure screw



Material:
Palm Grip grey cast iron;
Grup Screw steel

Surface finish:
Palm Grip painted,
Grub Screw black oxide finish

Sample order:
nlm 06170-100064

Note:
The Grub Screw is screwed and pinned into the Palm Grip.

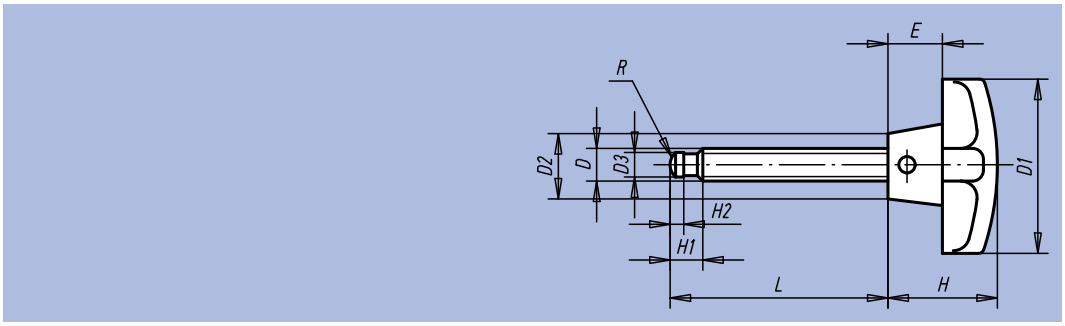

Order No.	D	D1	D2	D3	E	H	H1	H2	L	R	kg
06170-060020	M6	32	12	4,5	10	20	6	2,5	20	3	0,036
06170-060040	M6	32	12	4,5	10	20	6	2,5	40	3	0,040
06170-080027	M8	40	14	6	14	25	7,5	3	27	5	0,055
06170-080047	M8	40	14	6	14	25	7,5	3	47	5	0,073
06170-100044	M10	50	18	8	20	32	9	4,5	44	6	0,110
06170-100064	M10	50	18	8	20	32	9	4,5	64	6	0,137
06170-120040	M12	63	20	8	25	40	10	4,5	40	6	0,210
06170-120060	M12	63	20	8	25	40	10	4,5	60	6	0,220
06170-120080	M12	63	20	8	25	40	10	4,5	80	6	0,262
06170-160052	M16	80	25	12	30	50	12	5	52	9	0,450
06170-160072	M16	80	25	12	30	50	12	5	72	9	0,460
06170-160097	M16	80	25	12	30	50	12	5	97	9	0,560

Palm Grips

similar to DIN 6335



Material:
Black duroplastic PF 31;
projecting bush in steel;
bush and threaded bolt
in galvanized steel

Surface finish:
Deburred and high-polish finish

Sample order:
nlm 06180-505X30
(please also indicate dimension L)

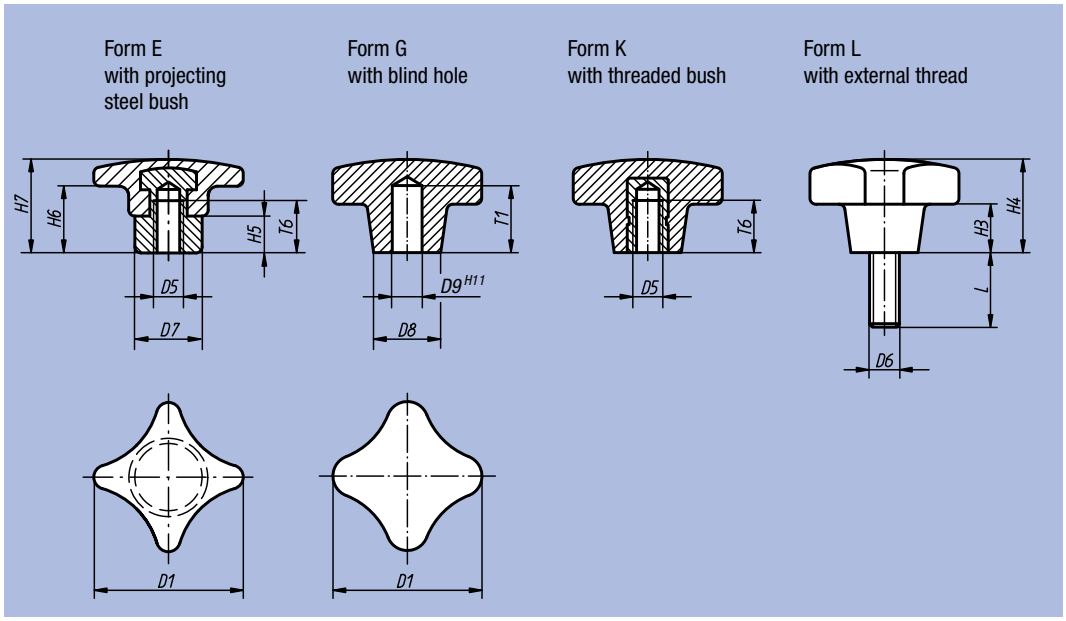

Palm Grips similar to DIN 6335, Form E, Form G and Form K

Order No.	Form	D1	D5	D7	H5	H6	H7	T6	g
06180-306	E	32	M6	12	9	12	23	12	9
06180-308	E	40	M8	14	10	13	26	14	12
06180-310	E	50	M10	18	12	18	32	18	33
06180-312	E	63	M12	20	14	23	40	22	70
06180-316	E	80	M16	25	17	28	50	30	120

Order No.	Form	D1	D8	D9	H3	H4	T1	g
06180-405	G	25	12	5	8	16	12	8
06180-406	G	32	14	6	10	20	15	10
06180-408	G	40	18	8	13	25	18	18
06180-410	G	50	22	10	20	32	21	24
06180-412	G	63	26	12	25	40	25	50

Order No.	Form	D1	D5	D8	H3	H4	T6	g
06180-205	K	25	M5	12	8	16	9,5	12
06180-206	K	32	M6	14	10	20	12	11
06180-208	K	40	M8	18	13	25	14	18
06180-210	K	50	M10	22	20	32	18	30
06180-212	K	63	M12	26	25	40	22	60
06180-216	K	80	M16	35	30	50	30	120

Palm Grips similar to DIN 6335, Form L

Order No.	Form	D1	D6	D8	H3	H4	L = screw length
06180-505X	L	25	M5	12	8	16	15 / 20 / 25 / 30 / 40 / 50
06180-506X	L	32	M6	14	10	20	15 / 20 / 25 / 30 / 40 / 50
06180-508X	L	40	M8	18	13	25	20 / 25 / 30 / 35 / 40 / 45 / 50
06180-510X	L	50	M10	22	20	32	20 / 25 / 30 / 35 / 40 / 45 / 50
06180-512X	L	63	M12	26	25	40	20 / 30 / 40 / 50 / 60

Quick-Fastening Grips

in grey cast iron



Material:
Grey cast iron GJL 300

Surface finish:
Sand-blasted or tumbled

Sample order:
nlm 06190-08

Note:
Quick-Fastening Grips can be used on all systems that do not require much clamping force.

This function is achieved by means of a semilateral thread.

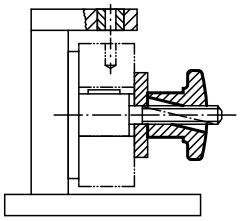

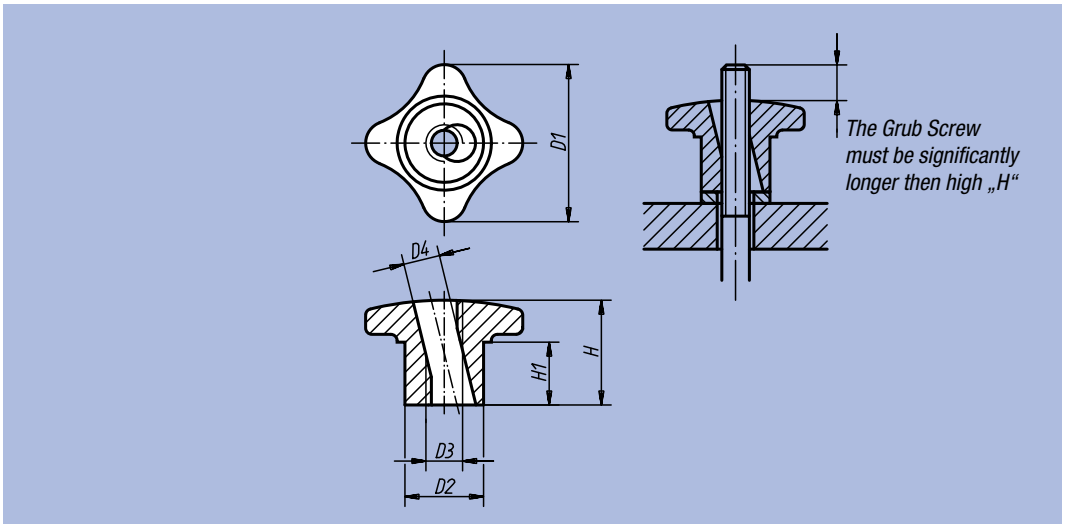

Order No.	D1	D2	D3	D4	H	H1	kg
06190-06	30	15	M6	7	20	12	0,025
06190-08	40	18	M8	9,4	25	14	0,040
06190-10	50	21	M10	11,3	30	16	0,085
06190-12	60	26	M12	13,1	35	19	0,190
06190-14	70	30	M14	15,6	40	22	0,270
06190-16	80	34	M16	17,6	45	25	0,380

Notes:

Aluminium Star Grips

similar to DIN 6336



Material:
Aluminium.
Surface finish:
Natural finish tumbled or ground and polished
Sample order:
nlm 06192-14008
On request:
Star Grips as blanks (deburred).

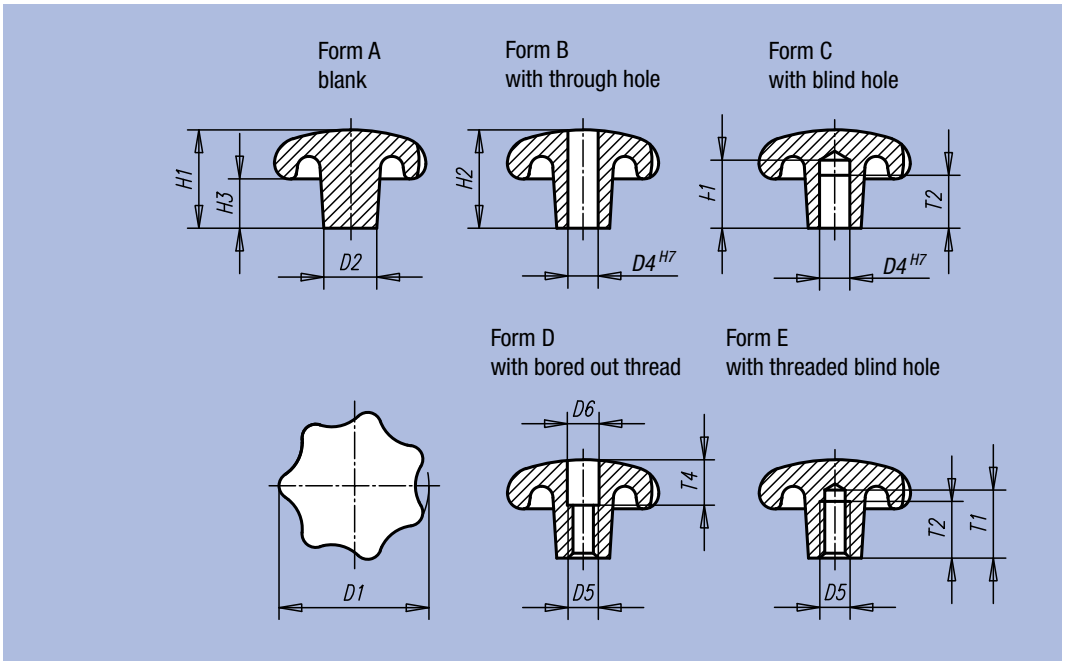

Order No.	Surface finish	Form	D1	D2	H1	H3	kg
06192-14008	tumbled	A	40	14	26	13	0,035
06192-15010	tumbled	A	50	18	34	17	0,065
06192-16312	tumbled	A	63	20	42	21	0,100
06192-18016	tumbled	A	80	25	52	25	0,220

Order No. Surface finish tumbled	Order No. Surface finish polished	Form	D1	D2	D4	H2	H3
06192-24008	06192-240082	B	40	14	8	25	13
06192-25010	06192-250102	B	50	18	10	32	17
06192-26312	06192-263122	B	63	20	12	40	21
06192-28016	06192-280162	B	80	25	16	50	25

Order No. Surface finish tumbled	Order No. Surface finish polished	Form	D1	D2	D4	H1	H3	T1	T2
06192-34008	06192-340082	C	40	14	8	26	13	18	15
06192-35010	06192-350102	C	50	18	10	34	17	21	18
06192-36312	06192-363122	C	63	20	12	42	21	25	22
06192-38016	06192-380162	C	80	25	16	52	25	32	28

Order No. Surface finish tumbled	Order No. Surface finish polished	Form	D1	D2	D5	D6	H2	H3	T4
06192-44008	06192-440082	D	40	14	M8	8,4	25	13	12
06192-45010	06192-450102	D	50	18	M10	10,5	32	17	16
06192-46312	06192-463122	D	63	20	M12	13	40	21	20
06192-48016	06192-480162	D	80	25	M16	17	50	25	30

Order No. Surface finish tumbled	Order No. Surface finish polished	Form	D1	D2	D5	H1	H3	T1	T2
06192-54008	06192-540082	E	40	14	M8	26	13	18	15
06192-55010	06192-550102	E	50	18	M10	34	17	21	18
06192-56312	06192-563122	E	63	20	M12	42	21	25	22
06192-58016	06192-580162	E	80	25	M16	52	25	32	28

Star Grips

in stainless steel, similar to DIN 6336



Material:
Stainless steel 1.4308
Surface finish:
Ground and polished
Sample order:
nlm 06194-232062
On request:
Star Grips in stainless steel
with external thread.

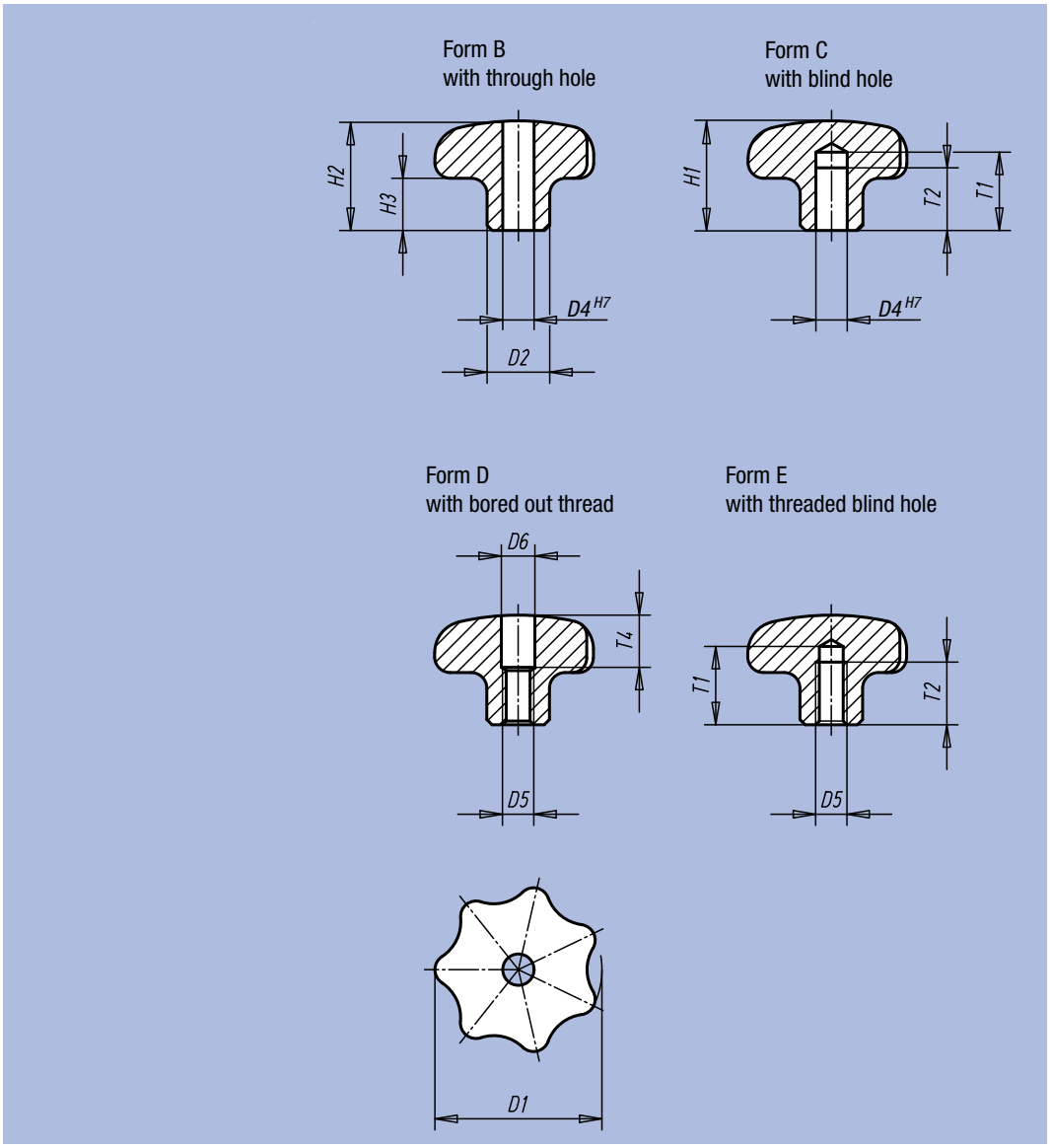

Order No. Form B	Order No. Form C	Surface finish	D1	D2	D4	H1	H2	H3	T1	T2
06194-232062	06194-332062	polished	32	12	6	21	20	10	15	12
06194-240082	06194-340082	polished	40	14	8	26	25	13	18	15
06194-250102	06194-350102	polished	50	18	10	34	32	17	21	18
06194-263122	06194-363122	polished	63	20	12	42	40	21	25	22

Order No. Form D	Order No. Form E	Surface finish	D1	D2	D5	D6	H1	H2	H3	T1	T2	T4
06194-432062	06194-532062	polished	32	12	M6	6,4	21	20	10	15	12	10
06194-440082	06194-540082	polished	40	14	M8	8,4	26	25	13	18	15	12
06194-450102	06194-550102	polished	50	18	M10	10,5	34	32	17	21	18	16
06194-463122	06194-563122	polished	63	20	M12	13	42	40	21	25	22	20

Grey Cast Iron Star Grips

DIN 6336



Material:
Grey cast iron GJL 200
Surface finish:
Natural finish tumbled
Sample order:
nlm 06200-106
On request:
Grey Cast Iron Star Grips
plastic-coated.

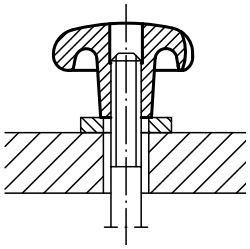

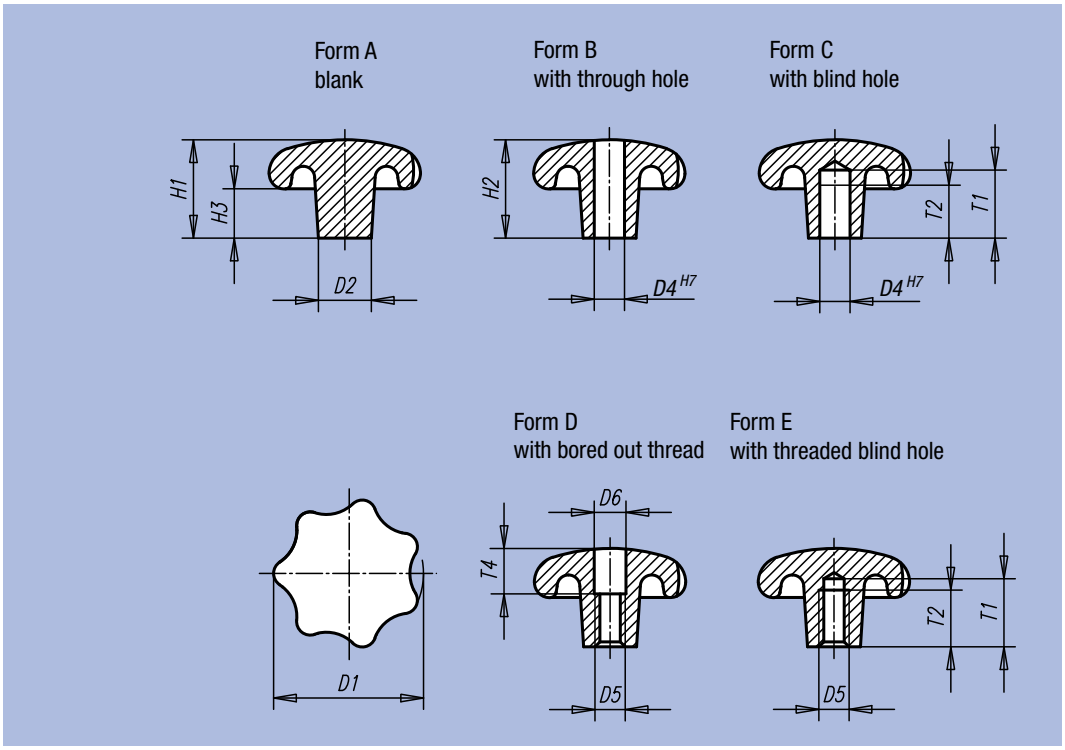

Order No. Form A	Order No. Form B	Surface finish	D1	D2	D4	H1	H2	H3
06200-106	06200-206	tumbled	32	12	6	21	20	10
06200-108	06200-208	tumbled	40	14	8	26	25	13
06200-110	06200-210	tumbled	50	18	10	34	32	17
06200-112	06200-212	tumbled	63	20	12	42	40	21
06200-116	06200-216	tumbled	80	25	16	52	50	25

Order No. Form C	Order No. Form D	Order No. Form E	Surface finish	D1	D2	D4	D5	D6	H1	H2	H3	T1	T2	T4
06200-306	06200-406	06200-506	tumbled	32	12	6	M6	6,4	21	20	10	15	12	10
06200-308	06200-408	06200-508	tumbled	40	14	8	M8	8,4	26	25	13	18	15	12
06200-310	06200-410	06200-510	tumbled	50	18	10	M10	10,5	34	32	17	21	18	16
06200-312	06200-412	06200-512	tumbled	63	20	12	M12	13	42	40	21	25	22	20
06200-316	06200-416	06200-516	tumbled	80	25	16	M16	17	52	50	25	32	28	30

Star Grips

similar to DIN 6336



Material:
Duroplastic PF 31, black.
Bush and threaded bolt in steel galvanised and blue chromated.

Surface finish:
Deburred and high-polish finish

Sample order:
nlm 06208-42505X15
(please also indicate dimension L)

Note:
The version 06208-22004 has a bush in copper-plated steel.

On request:
Other colours.

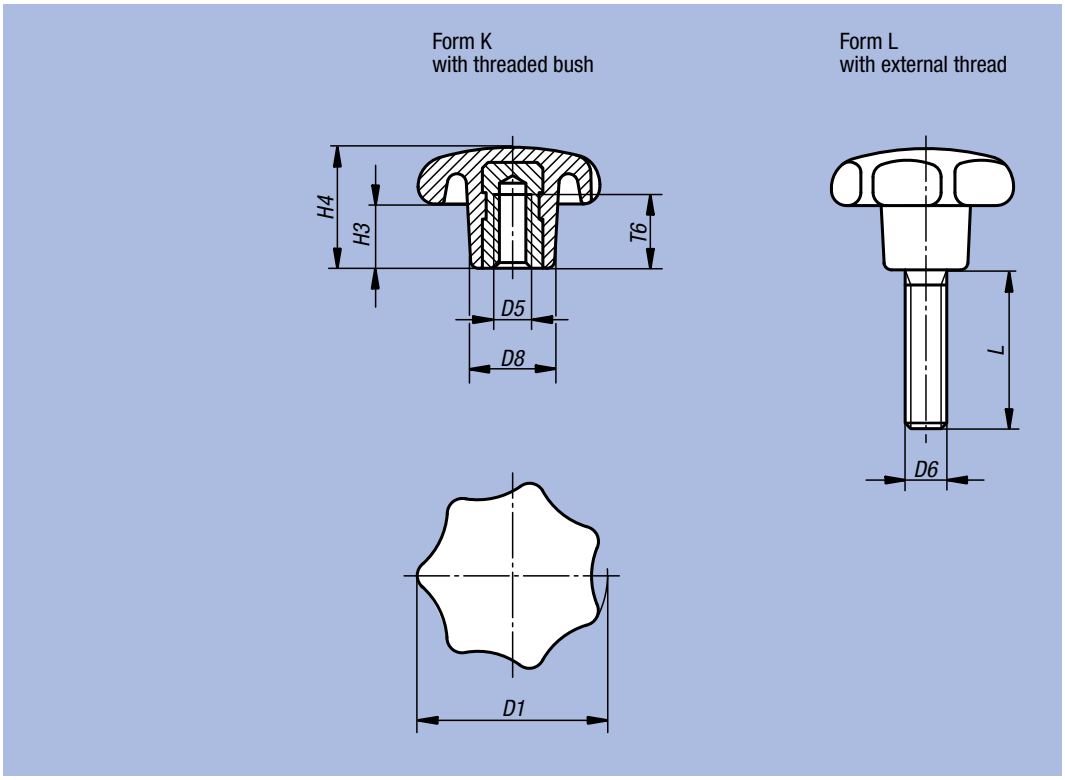

Star Grips similar to DIN 6336 with internal thread, Form K

Order No.	Form	D1	D5	D8	H3	H4	T6
06208-22004	K	20	M4	10	7	13	6,5
06208-22505	K	25	M5	12	8	16	9,5
06208-23206	K	32	M6	14	10	20	12
06208-24008	K	40	M8	18	13	25	14
06208-25010	K	50	M10	22	17	32	18
06208-26312	K	63	M12	26	21	40	22
06208-28016	K	80	M16	35	25	50	30

Star Grips similar to DIN 6336 with external thread, Form L

Order No.	Form	D1	D6	D8	H3	H4	L
06208-42505X	L	25	M5	12	8	16	15 / 20 / 25
06208-43206X	L	32	M6	14	10	20	15 / 20 / 25 / 30
06208-44008X	L	40	M8	18	13	25	20 / 25 / 30 / 35 / 40
06208-45010X	L	50	M10	22	17	32	25 / 30 / 35 / 40 / 50
06208-46312X	L	63	M12	26	21	40	30 / 35 / 40 / 50 / 60
06208-48016X	L	80	M16	32	25	50	30 / 40 / 50 / 60

Notes:

Star Grips

with projecting steel bush



Material:
Black thermoplastic;
steel parts quality class 5.8
or in stainless steel 1.4305

Surface finish:
Steel parts blue chromated or
in stainless steel natural finish

Sample order:
nlm 06210-2081

Note:
Star Grips with projecting steel bush are especially suitable for cross pin connections.

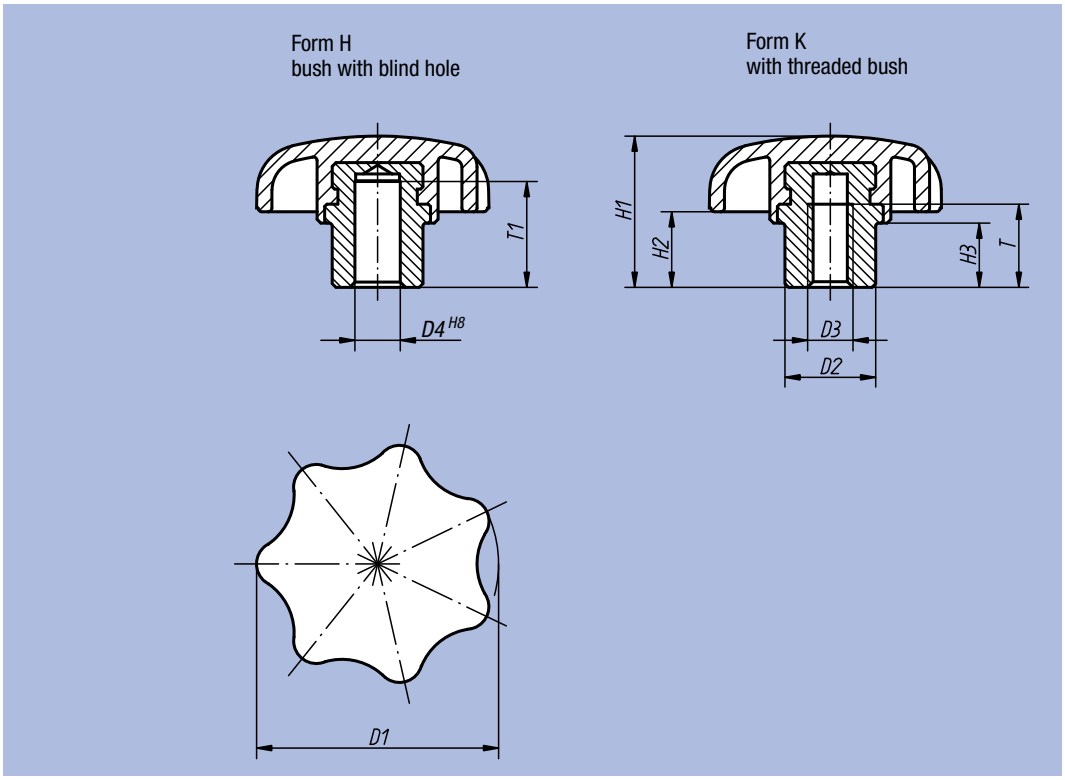

Star Grips with projecting steel bush, Form H

Order No.	Surface finish	Form	D1	D2	D4	H1	H2	H3	T1
06210-105	bush steel	H	25	10	5	16	8	6	9,5
06210-106	bush steel	H	32	12	6	20	10	8,5	12
06210-1061	bush steel	H	40	13,5	6	25	13	10	14
06210-108	bush steel	H	40	13,5	8	25	13	10	14
06210-1081	bush steel	H	50	19	8	32	17	12	18
06210-110	bush steel	H	50	19	10	32	17	12	18
06210-1101	bush steel	H	63	19	10	40	21	15	22
06210-112	bush steel	H	63	19	12	40	21	15	22
06210-116	bush steel	H	63	23	16	40	21	15	22

Star Grips with projecting steel bush, Form K

Order No. Surface finish bush steel	Order No. Surface finish bush stainless steel	Form	D1	D2	D3	H1	H2	H3	T
06210-205	06210-305	K	25	10	M5	16	8	6	8,5
06210-206	06210-306	K	32	12	M6	20	10	8,5	12
06210-2061	06210-3061	K	40	13,5	M6	25	13	10	14
06210-208	06210-308	K	40	13,5	M8	25	13	10	14
06210-2081	06210-3081	K	50	19	M8	32	17	12	18
06210-210	06210-310	K	50	19	M10	32	17	12	18
06210-2101	06210-3101	K	63	19	M10	40	21	15	22
06210-212	06210-312	K	63	19	M12	40	21	15	22
06210-216	06210-316	K	63	23	M16	40	21	15	22

Star Grips

similar to DIN 6336, steel parts in stainless steel





Material:
Black thermoplastic; bush and threaded bolt in stainless steel 1.4305

Surface finish:
Bush and threaded bolt natural finish

Sample order:
nlm 06212-4067X30
((grip cap colour bright yellow;
please also indicate dimension L)

Note:
Δ Add the desired grip cap colour here; no colour code is required with black grip caps.

On request:
Other colours or designs, such as company logos.

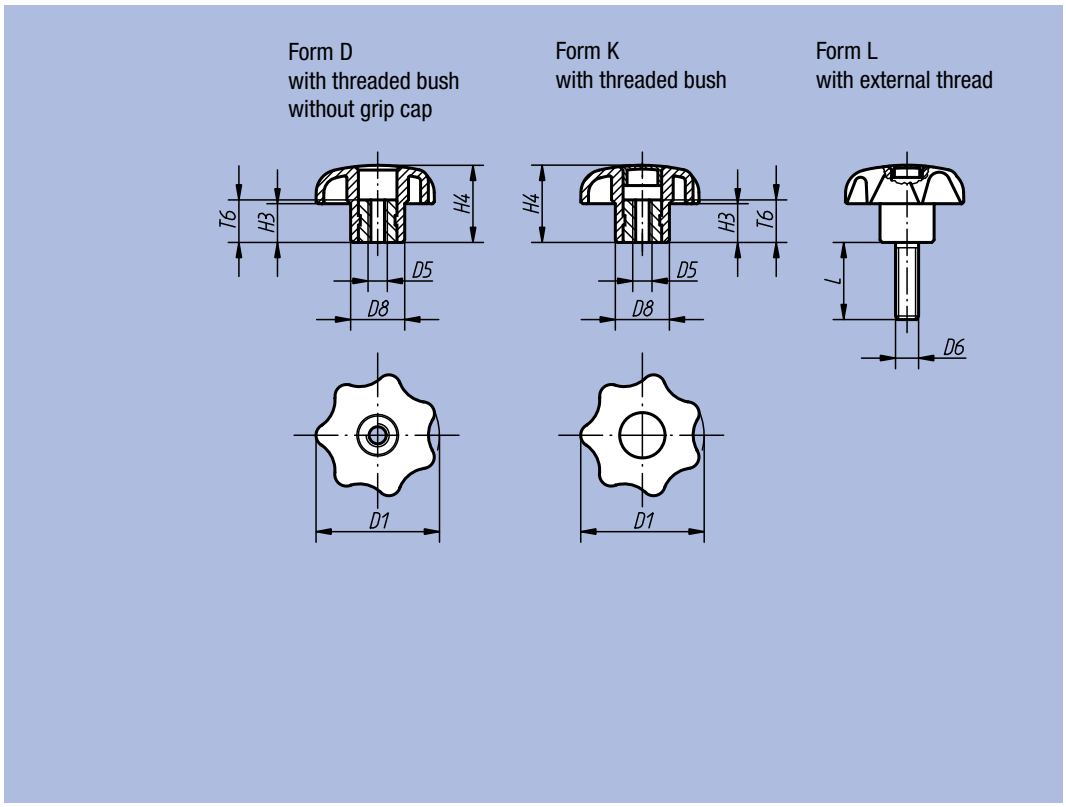



Star Grips similar to DIN 6336, steel parts in stainless steel with internal thread, Form D

Order No.	Form	D1	D5	D8	H3	H4	T6	≈ g
06212-505	D	25	M5	12	8	16	10	8
06212-506	D	32	M6	14	10	20	10	10
06212-508	D	40	M8	18	13	25	14	24
06212-510	D	50	M10	22	17	32	14	40
06212-512	D	63	M12	26	21	40	18	80

Star Grips similar to DIN 6336, steel parts in stainless steel with internal thread, Form K

Order No.	Form	D1	D5	D8	H3	H4	T6	≈ g
06212-205Δ	K	25	M5	12	8	16	10	8
06212-206Δ	K	32	M6	14	10	20	10	10
06212-208Δ	K	40	M8	18	13	25	14	24
06212-210Δ	K	50	M10	22	17	32	14	40
06212-212Δ	K	63	M12	26	21	40	18	80

Star Grips similar to DIN 6336, steel parts in stainless steel with external thread, Form L

Order No.	Form	D1	D6	D8	H3	H4	L
06212-405ΔX	L	25	M5	12	8	16	15 / 20
06212-406ΔX	L	32	M6	14	10	20	20 / 30
06212-408ΔX	L	40	M8	18	13	25	15 / 20 / 25 / 30 / 40 / 60
06212-410ΔX	L	50	M10	22	17	32	25 / 30 / 40 / 50 / 60

Star Grips

similar to DIN 6336



Material:
Black thermoplastic;
bush and threaded bolt in steel

Surface finish:
Bush and threaded bolt galvanized and blue chromated

Sample order:
nlm 06220-4127X30
(grip cap colour bright yellow;
please also indicate dimension L)

Note:
Δ Add the desired grip cap colour here; no colour code is required with black grip caps.

On request:
Other colours or designs, such as company logos.

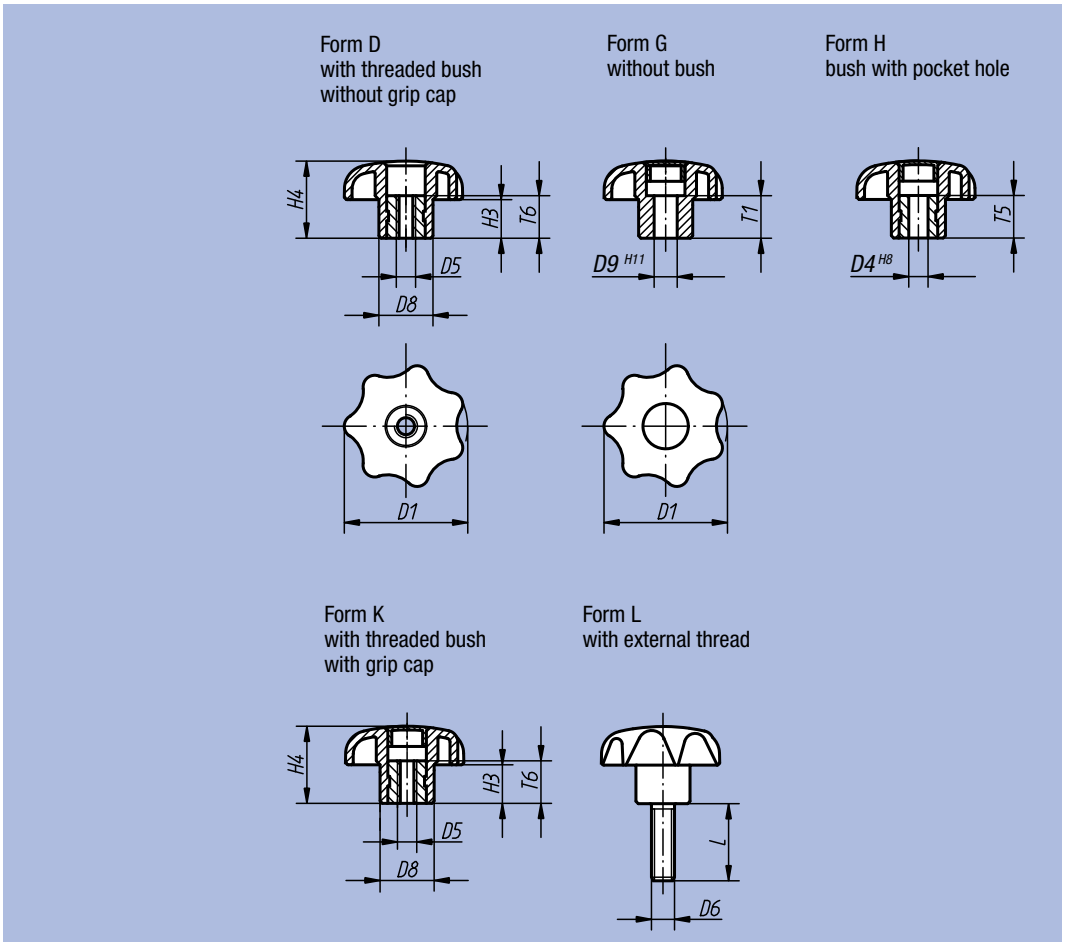



Star Grips similar to DIN 6336 with internal thread, Form D

Order No.	Form	D1	D5	D8	H3	H4	T6
06220-504	D	25	M4	12	8	16	10
06220-505	D	25	M5	12	8	16	10
06220-5061	D	25	M6	12	8	16	10
06220-5051	D	32	M5	14	10	20	10
06220-506	D	32	M6	14	10	20	10
06220-508	D	40	M8	18	13	25	14
06220-5101	D	40	M10	18	13	25	14
06220-5081	D	50	M8	22	17	32	14
06220-510	D	50	M10	22	17	32	14
06220-5121	D	50	M12	22	17	32	18
06220-5102	D	63	M10	26	21	40	14
06220-512	D	63	M12	26	21	40	18
06220-516	D	63	M16	26	21	40	18

Star Grips

similar to DIN 6336

examples of grip cap designs



Star Grips similar to DIN 6336 with internal thread, Form K

Order No.	Form	D1	D5	D8	H3	H4	T6	g
06220-204Δ	K	25	M4	12	8	16	10	11
06220-205Δ	K	25	M5	12	8	16	10	10
06220-2061Δ	K	25	M6	12	8	16	10	10
06220-2051Δ	K	32	M5	14	10	20	10	13
06220-206Δ	K	32	M6	14	10	20	10	13
06220-208Δ	K	40	M8	18	13	25	14	25
06220-2101Δ	K	40	M10	18	13	25	14	24
06220-2081Δ	K	50	M8	22	17	32	14	50
06220-210Δ	K	50	M10	22	17	32	14	48
06220-2121Δ	K	50	M12	22	17	32	18	46
06220-2102Δ	K	63	M10	26	21	40	14	90
06220-212Δ	K	63	M12	26	21	40	18	88
06220-216Δ	K	63	M16	26	21	40	18	87

Star Grips similar to DIN 6336with locating hole, Form G und H

Order No. Form G	Order No. Form H	D1	D4	D8	D9	H3	H4	T1	T5
06220-305Δ	06220-105Δ	25	5	12	5	8	16	10	10
06220-306Δ	06220-106Δ	32	6	14	6	10	20	10	10
06220-308Δ	06220-108Δ	40	8	18	8	13	25	14	14
06220-310Δ	06220-110Δ	50	10	22	10	17	32	14	14
-	06220-1101Δ	63	10	26	-	21	40	-	14
06220-312Δ	06220-112Δ	63	12	26	12	21	40	18	18

Star Grips similar to DIN 6336 with external thread, Form L

Order No.	Form	D1	D6	D8	H3	H4	L
06220-405ΔX	L	25	M5	12	8	16	10 / 15 / 20 / 25 / 30 / 35 / 40 / 45 / 50 / 60
06220-406ΔX	L	25	M6	12	8	16	10 / 15 / 20 / 25 / 30 / 35 / 40 / 45 / 50 / 60
06220-4061ΔX	L	32	M6	14	10	20	10 / 15 / 20 / 25 / 30 / 35 / 40 / 45 / 50 / 60
06220-408ΔX	L	32	M8	14	10	20	15 / 20 / 25 / 30 / 35 / 40 / 45 / 50 / 60
06220-4081ΔX	L	40	M8	18	13	25	15 / 20 / 25 / 30 / 35 / 40 / 45 / 50 / 60
06220-410ΔX	L	40	M10	18	13	25	15 / 20 / 25 / 30 / 35 / 40 / 45 / 50 / 60
06220-4101ΔX	L	50	M10	22	17	32	15 / 20 / 25 / 30 / 35 / 40 / 45 / 50 / 60
06220-412ΔX	L	50	M12	22	17	32	15 / 20 / 25 / 30 / 35 / 40 / 45 / 50 / 60
06220-4102ΔX	L	63	M10	26	21	40	20 / 25 / 30 / 35 / 40 / 45 / 50 / 60
06220-4121ΔX	L	63	M12	26	21	40	20 / 25 / 30 / 35 / 40 / 45 / 50 / 60
06220-416ΔX	L	63	M16	26	21	40	30 / 35 / 40 / 45 / 50 / 60

Quick-Acting Star Grips



Material:
Black thermoplastic; bush in steel
Surface finish:
Bush galvanized and blue chromated
Sample order:
nlm 06222-06
Note:
Quick-Acting Star Grips are mainly used in applications where no high clamping pressures are requried. This function is achieved by means of a semilateral thread.

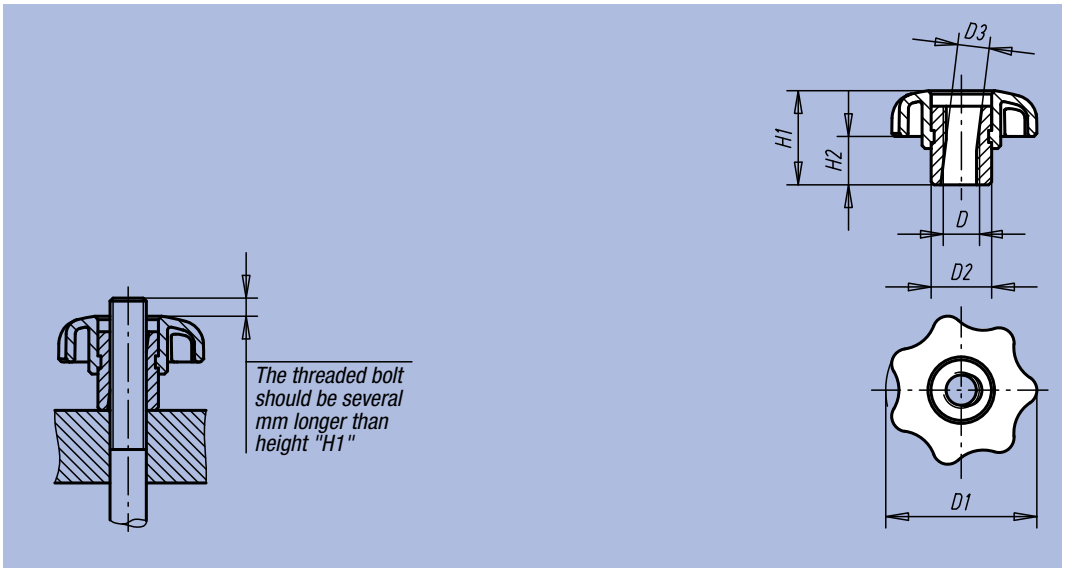

Order No.	D	D1	D2	D3	H1	H2	kg
06222-05	M5	25	10	5,2	15,5	8	0,008
06222-06	M6	32	12	6,2	19,5	10	0,013
06222-08	M8	40	13,5	8,3	24,5	13	0,020
06222-10	M10	50	19	10,3	31	17	0,055
06222-12	M12	63	19	12,3	39,5	21	0,068

Four-Spoked Nuts



Material:
GJMW 350 malleable cast iron
Surface finish:
deburred and sand-blasted
Sample order:
nlm 06230-20

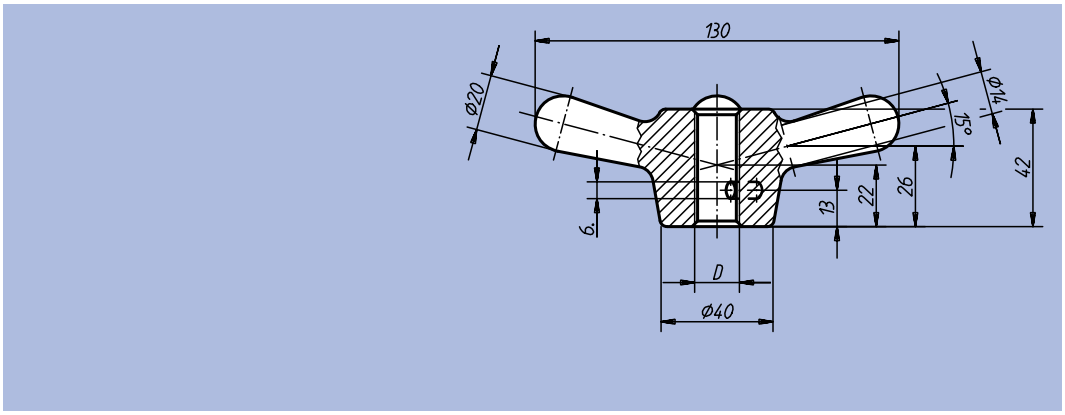

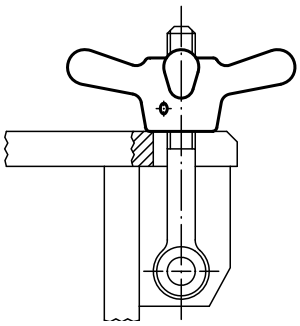

Order No.	D	kg
06230-16	M16	0,710
06230-20	M20	0,675
06230-24	M24	0,640

Capstan



Material:
Capstan steel;
Ball Knop thermoplastic

Surface finish:
Capstan black oxide finish;
Ball Knop black

Sample order:
nlm 06235-160

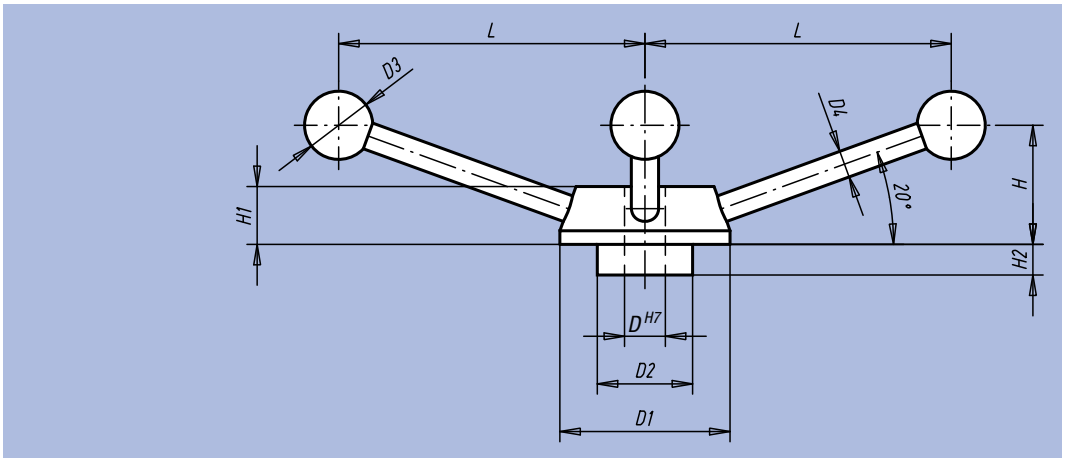

Order No.	D	D1	D2	D3	D4	H	H1	H2	L	kg
06235-120	12	50	28	20	8	35	17	9	90	0,360
06235-140	14	55	30	25	10	38	18	10	99	0,530
06235-160	16	65	35	30	12	45	20	12	119	0,840
06235-200	20	80	44	35	14	56	24	16	150	1,560

Notes:

Flat Knobs



Material:
Steel.
Surface finish:
Black oxide finish
Sample order:
nlm 06237-08

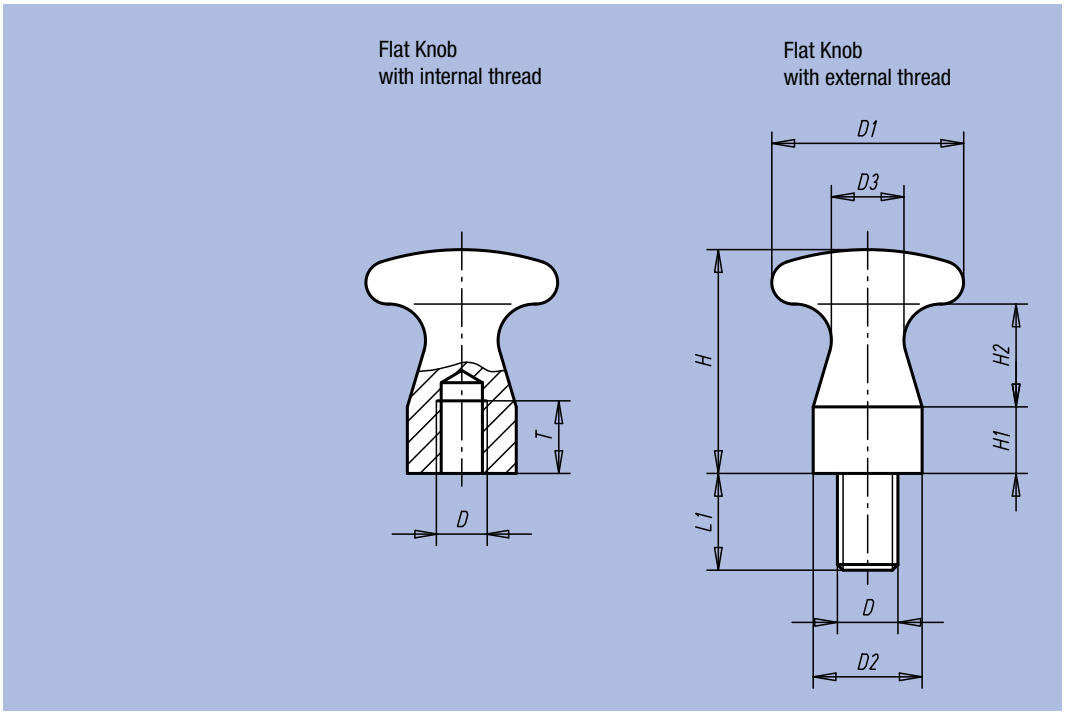

Flat Knobs with internal thread

Order No.	D	D1	D2	D3	H	H1	H2	T
06237-05	M5	16	10	6	18	5	9	7
06237-06	M6	25	14	10	29	9	13	9
06237-08	M8	32	18	12	37	11	17	12
06237-10	M10	36	20	13	42	12	20	15

Flat Knobs with external thread

Order No.	D	D1	D2	D3	H	H1	H2	L1
06237-06010	M6	16	10	6	18	5	9	10
06237-08014	M8	25	14	10	29	9	13	14
06237-10016	M10	32	18	12	37	11	17	16
06237-12018	M12	36	20	13	42	12	20	18

Mushroom Knobs in stainless steel



Material, Surface finish:
Stainless steel 1.4305,
electrolytic-polish

Sample order:
nlm 06240-104

On request:
Mushroom Knobs with
external threads.

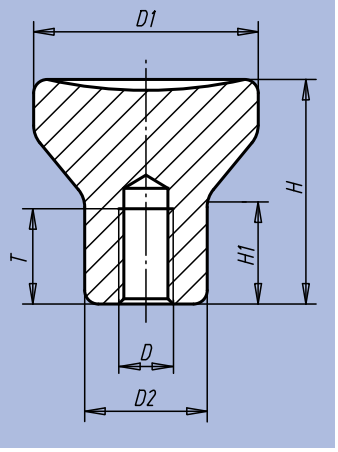

Order No.	D	D1	D2	H	H1	T	kg
06240-902	M2	14	8	14	6,7	4	0,009
06240-003	M3	18	10	18	8,6	7,5	0,019
06240-104	M4	21	12	21	10	10	0,030
06240-105	M5	21	12	21	10	12,5	0,030
06240-206	M6	25	14	25	12	12	0,049
06240-308	M8	33	18	33	16	16	0,113
06240-410	M10	40	24	40	18,7	20	0,217

Notes:

Mushroom Knobs



Material, Surface finish:
Anthracite grey thermoplastic;
bush and threaded bolt in steel 5.8, blue chromated or stainless steel 1.4305, natural finish

Sample order:
nlm 06242-046X10
(knob cap colour traffic red;
please also indicate dimension L)

Note:
Δ Add the desired knob cap colour here; no colour code is required with anthracite grey knob caps.

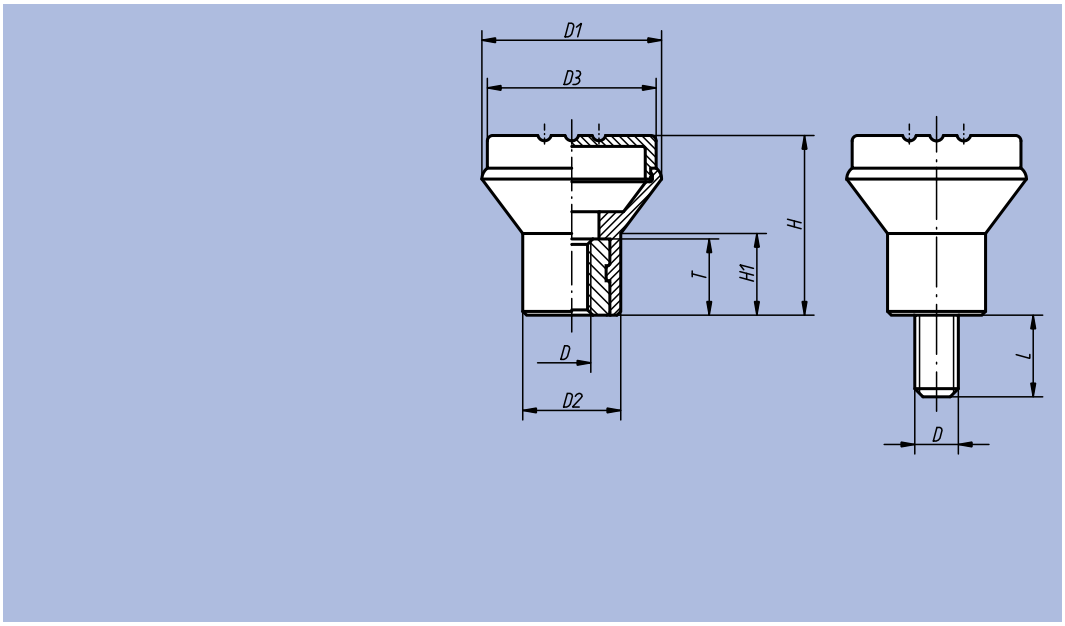

anthracite grey	light grey Δ = 5	traffic red Δ = 6	bright yellow Δ = 7
 RAL 7021	 RAL 7035	 RAL 3020	 RAL 1021

Order No. with internal thread	Surface finish	Size	D	D1	D2	D3	H	H1	T	kg
06241-04Δ	bush in steel	1	M4	21	12	19	21	10	10	0,009
06241-05Δ	bush in steel	1	M5	21	12	19	21	10	10	0,008
06241-06Δ	bush in steel	2	M6	25	14	23	25	12	10	0,009
06241-08Δ	bush in steel	3	M8	33	19	31	33	15	14	0,022
06241-004Δ	bush in stainless steel	1	M4	21	12	19	21	10	10	0,009
06241-005Δ	bush in stainless steel	1	M5	21	12	19	21	10	10	0,008
06241-006Δ	bush in stainless steel	2	M6	25	14	23	25	12	10	0,009
06241-008Δ	bush in stainless steel	3	M8	33	19	31	33	15	14	0,022

Order No. with external thread	Surface finish	Size	D	D1	D2	D3	H	H1	L	kg
06242-04ΔX	bolt in steel	1	M4	21	12	19	21	10	10	0,010
06242-05ΔX	bolt in steel	1	M5	21	12	19	21	10	10	0,010
06242-06ΔX	bolt in steel	2	M6	25	14	23	25	12	15	0,014
06242-08ΔX	bolt in steel	3	M8	33	19	31	33	15	15	0,031
06242-004ΔX	bolt in stainless steel	1	M4	21	12	19	21	10	10	0,010
06242-005ΔX	bolt in stainless steel	1	M5	21	12	19	21	10	10	0,010
06242-006ΔX	bolt in stainless steel	2	M6	25	14	23	25	12	15	0,014
06242-008ΔX	bolt in stainless steel	3	M8	33	19	31	33	15	15	0,031

Grip Balls



Material, Surface finish:
Anthracite grey thermoplastic:
bush and threaded bolt in steel 5.8, blue chromated or stainless steel, 1.4305 natural finish

Sample order:
nlm 06245-1066X15
(grip cap colour traffic red;
please also indicate dimension L)

Note:
Δ Add the desired grip cap colour here; no colour code is required with anthracite grey grip caps

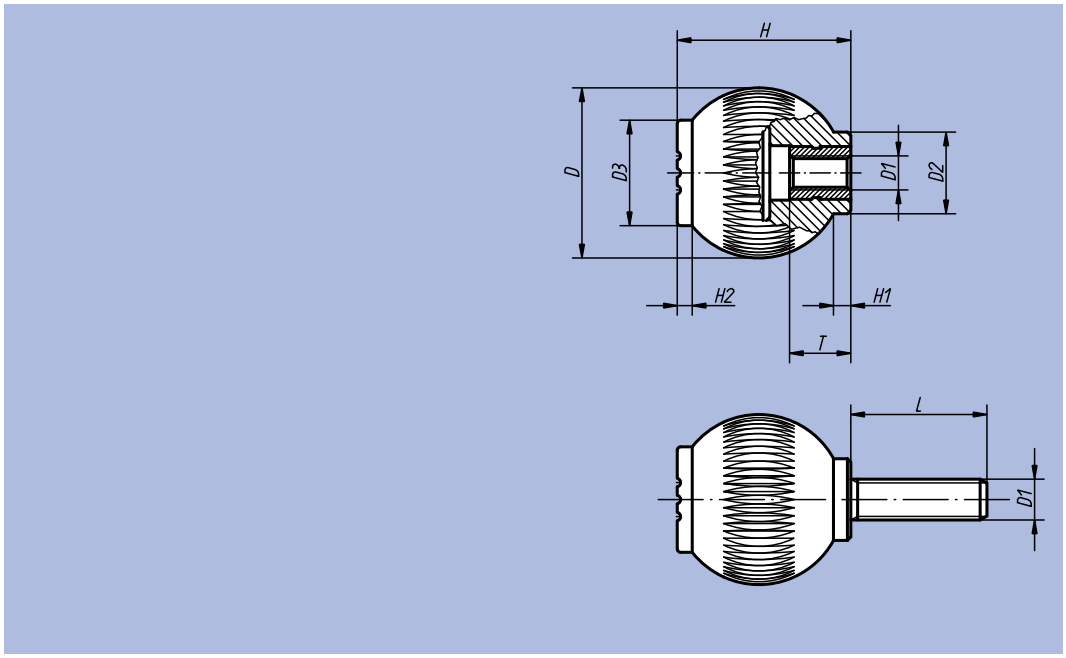



Order No. Surface finish bush in steel	Order No. Surface finish bush in stainless steel	Surface finish	Size	D	D1	D2	D3	H	H1	H2	T	kg
06245-106Δ	06245-0106Δ	internal thread	1	25	M6	12	17	25	2,5	2,2	10	0,014
06245-208Δ	06245-0208Δ	internal thread	2	32	M8	15,5	19	33	3,2	2,8	14	0,023
06245-310Δ	06245-0310Δ	internal thread	3	40	M10	19	23	41,5	4	3,5	14	0,042
06245-410Δ	06245-0410Δ	internal thread	4	50	M10	24	31	51	5	4,4	14	0,070
06245-412Δ	06245-0412Δ	internal thread	4	50	M12	24	31	51	5	4,4	18	0,072

Order No. Surface finish bolt in steel	Order No. Surface finish bolt in stainless steel	Surface finish	Size	D	D1	D2	D3	H	H1	H2	L = screw length
06245-106ΔX	06245-0106ΔX	external thread	1	25	M6	12	17	25	2,5	2,2	15 / 20 / 25 / 30
06245-208ΔX	06245-0208ΔX	external thread	2	32	M8	15,5	19	33	3,2	2,8	20 / 25 / 30 / 40
06245-310ΔX	06245-0310ΔX	external thread	3	40	M10	19	23	41,5	4	3,5	20 / 30 / 40
06245-410ΔX	06245-0410ΔX	external thread	4	50	M10	24	31	51	5	4,4	20 / 30 / 40
06245-412ΔX	06245-0412ΔX	external thread	4	50	M12	24	31	51	5	4,4	20 / 30 / 40

Grip Balls

revolving



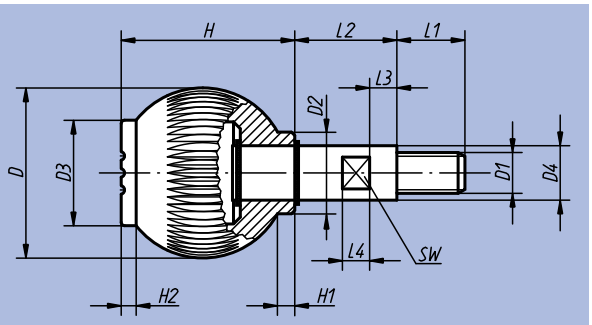

Material, Surface finish:
Anthracite grey thermoplastic, shaft in steel 5.8, blue chromated or stainless steel 1.4305, natural finish; circlips are galvanized (including stainless steel versions)

Sample order:
nlm 06246-1066
(grip cap colour traffic red)

Note:
Δ Add the desired grip cap colour here; no colour code is required with anthracite grey grip caps.

anthracite grey	light grey Δ = 5	traffic red Δ = 6	bright yellow Δ = 7
 RAL 7021	 RAL 7035	 RAL 3020	 RAL 1021

Order No. Surface finish Axis in steel	Order No. Surface finish Axis in stainless steel	Size	D	D1	D2	D3	D4	H	H1	H2	L1	L2	L3	L4	SW	kg
06246-106Δ	06246-0106Δ	1	25	M6	12	17	8	25	2,5	2,2	10	15	5	5	7	0,020
06246-208Δ	06246-0208Δ	2	32	M8	15,5	19	10	33	3,2	2,8	12	20	6	6	8	0,042
06246-310Δ	06246-0310Δ	3	40	M10	19	23	13	41,5	4	3,5	15	25	7	9	10	0,086
06246-412Δ	06246-0412Δ	4	50	M12	24	31	16	51	5	4,4	20	30	8	8	13	0,157

Ball Knobs

in thermoplastic to DIN 319 extended



Material, Surface finish:
Black thermoplastic,
bush in galvanized steel

Sample order:
nlm 06247-11604

On request:
Other colours.

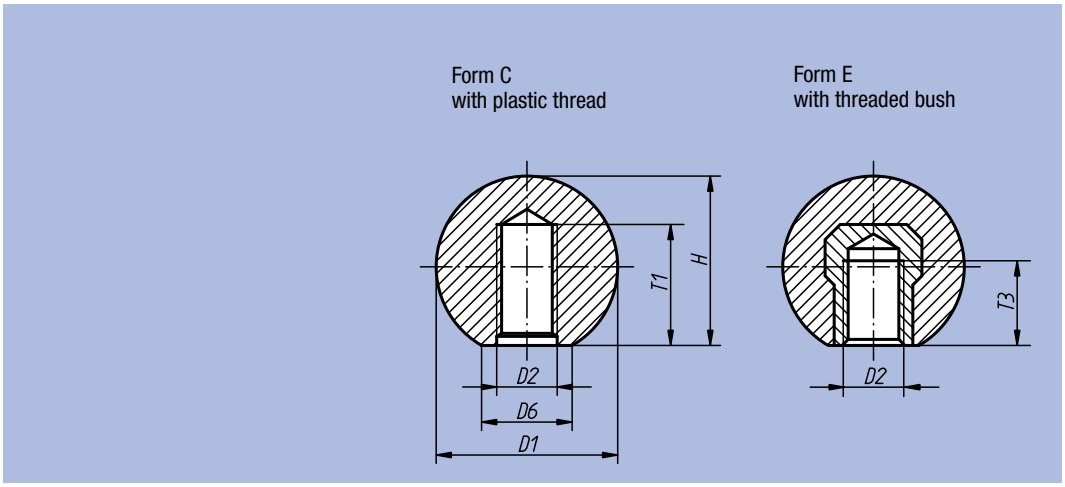

Order No.	Form	D1	D2	~D6	~H	T1 min.	T3 min.
06247-11604	C	16	M4	8	15	7	-
06247-11605	C	16	M5	8	15	7	-
06247-12005	C	20	M5	12	18	9	-
06247-12006	C	20	M6	12	18	9	-
06247-12506	C	25	M6	15	22,5	11	-
06247-12508	C	25	M8	15	22,5	11	-
06247-13208	C	32	M8	18	29	14,5	-
06247-13210	C	32	M10	18	29	14,5	-
06247-22005	E	20	M5	12	18	-	7,5
06247-22006	E	20	M6	12	18	-	7,5
06247-22506	E	25	M6	15	22,5	-	9
06247-22508	E	25	M8	15	22,5	-	9
06247-23208	E	32	M8	18	29	-	12
06247-23210	E	32	M10	18	29	-	12

Ball Knobs

stainless steel or aluminium DIN 319



Material:
Stainless steel 1.4305 or aluminium.

Surface finish:
Polished

Sample order:
nlm 06247-116043

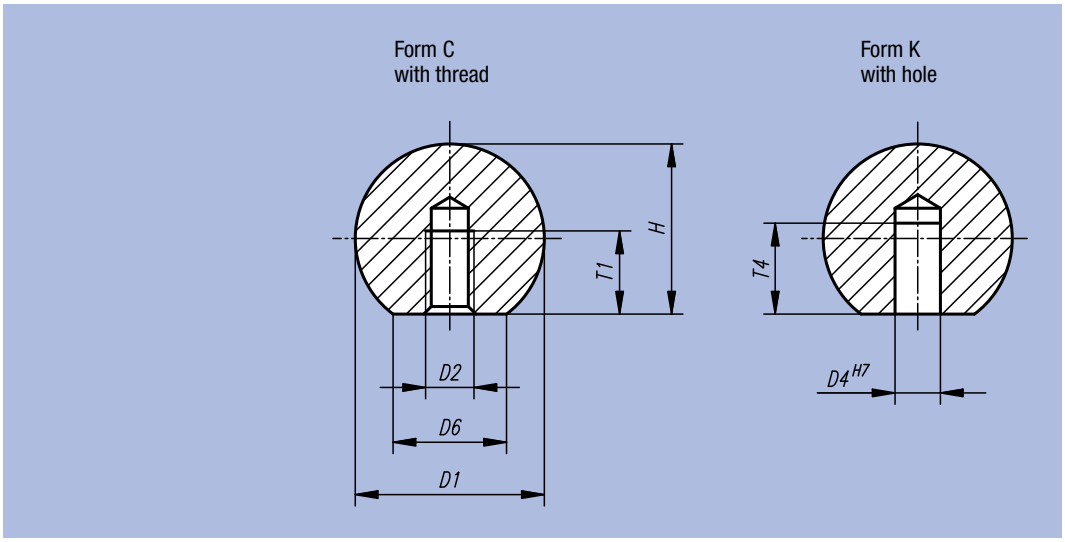

Ball knobs in stainless steel according to DIN 319

Order No. Form C	Order No. Form K	D1	D2	D4	~D6	~H	T1 min.	T4 min.
06247-116042	06247-316042	16	M4	6	8	15	7,2	10
06247-120052	06247-320052	20	M5	8	12	18	9,1	12
06247-125062	06247-325062	25	M6	10	15	22,5	11	16
06247-132082	06247-332082	32	M8	12	18	29	14,5	20
06247-140102	06247-340102	40	M10	16	22	37	18	25
06247-150122	06247-350122	50	M12	20	28	46	21	32

Ball Knobs in aluminium to DIN 319

Order No. Form C	Order No. Form K	D1	D2	D4	~D6	~H	T1 min.	T4 min.
06247-116043	06247-316043	16	M4	6	8	15	7,2	10
06247-120053	06247-320053	20	M5	8	12	18	9,1	12
06247-125063	06247-325063	25	M6	10	15	22,5	11	16
06247-132083	06247-332083	32	M8	12	18	29	14,5	20
06247-140103	06247-340103	40	M10	16	22	37	18	25
06247-150123	06247-350123	50	M12	20	28	46	21	32

Ball Knobs

with smooth surface to DIN 319 extended



Material:
Black duroplastic PF 31;
bush in galvanized steel

Surface finish:
Deburred and high-polish finish

Sample order:
nlm 06250-11604

Note:
Assembly Form L: The Ball Knobs are mounted firmly by tapping a hammer lightly. Please only use a rubber or plastic hammer, with a weight up to 200 g!

The version 06250-21604 has a bush in copper-plated steel.
The versions 06250-23008, 06250-23508 and 06250-24008 have a bush in brass.

On request:
* These versions are available from stock in dark red at extra charge.

Shaft tolerance:
Ball Knobs with clamping sleeves can be mounted on standard rods with tolerance h9. The clamping sleeve supplied assures a firm and reliable fit..

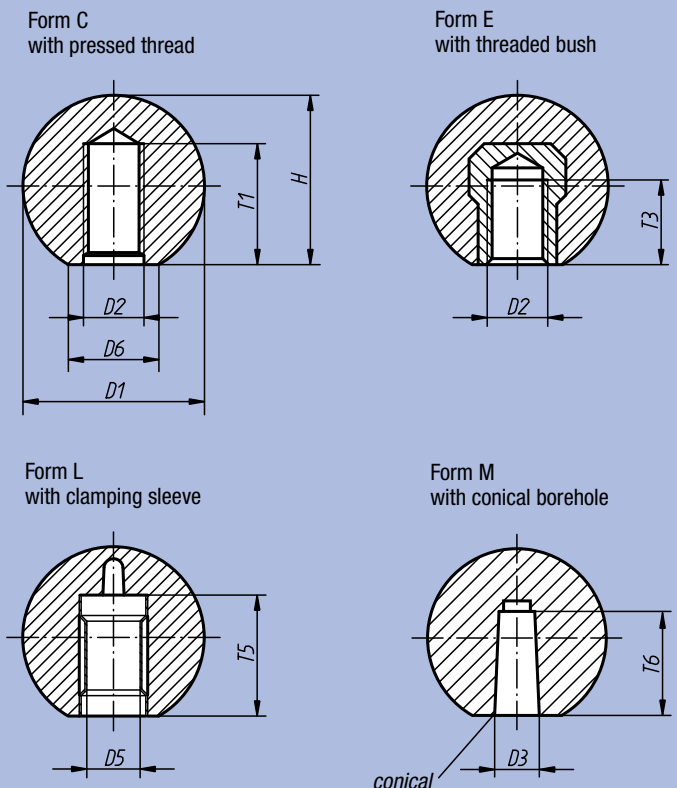

Order No. Form C	Order No. Form E	Order No. Form L	Order No. Form M	D1	D2	D3	D5	~D6	~H	T1 min.	T3 min.	T5	T6
06250-11604	06250-21604	-	06250-31604	16	M4	4	-	8	15	7	6	-	9
06250-11605	-	-	-	16	M5	-	-	8	15	7,5	-	-	-
06250-11606	-	-	-	16	M6	-	-	8	15	7,5	-	-	-
06250-12005*	06250-22005*	06250-42005	06250-32005	20	M5	5	5	12	18	9	7,5	13	12
06250-12006	06250-22006	-	-	20	M6	-	-	12	18	10,5	8	-	-
06250-12506*	06250-22506*	06250-42506	06250-32506	25	M6	6	6	15	23	11	9	16	15
06250-12508	06250-22508	06250-42508	06250-32508	25	M8	8	8	15	23	13,5	13,5	15	15
06250-13008*	06250-23008*	-	-	30	M8	-	-	16	28	14	14	-	-
06250-13208*	06250-23208	06250-43208	06250-33208	32	M8	8	8	18	29	14,5	12	15	15
06250-13210	06250-23210	06250-43210	06250-33210	32	M10	10	10	18	29	16	16	20	15
06250-13508*	06250-23508	-	-	36	M8	-	-	17	33	20	14	-	-
06250-13510*	06250-23510	-	-	36	M10	-	-	17	33	21	14	-	-
06250-14008	06250-24008	-	-	40	M8	-	-	20	37,5	22	14	-	-
06250-14010*	06250-24010*	06250-44010	06250-34010	40	M10	10	10	20	37,5	18	15	20	20
06250-14012	06250-24012	06250-44012	06250-34012	40	M12	12	12	20	37,5	23	21	23	20
06250-14510	06250-24510	-	-	45	M10	-	-	20	43	26	22	-	-
06250-14512	06250-24512	-	-	45	M12	-	-	20	43	30	21	-	-
06250-15010	06250-25010	-	-	50	M10		-	22	48	30	22	-	-
06250-15012*	06250-25012*	06250-45012	06250-35012	50	M12		12	22	48	21	18	20	22

Tapered Knops



Material:
Black duroplastic PF 31
Surface finish:
Pressed thread
Sample order:
nlm 06251-06

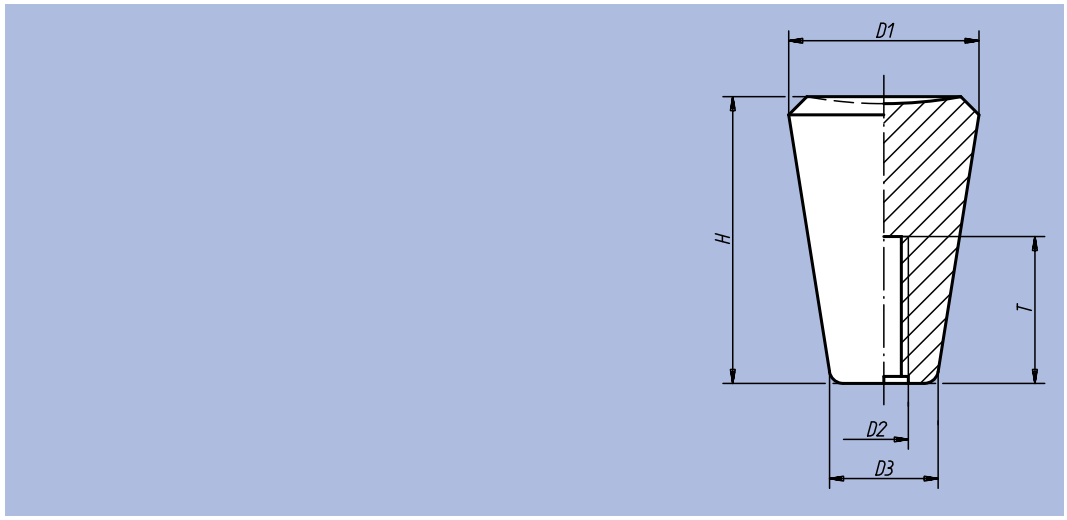

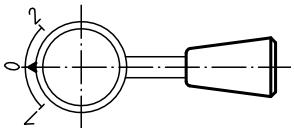

Order No.	D1	D2	D3	H	T	g
06251-05	20	M5	12	31	15	8
06251-06	25	M6	15	38	19	16
06251-08	30	M8	18	46	16	28
06251-10	35	M10	21	53	19	42

Conical Knops



Material:
Black duroplastic PF 31
Surface finish:
Deburred and high-polish finish
Sample order:
nlm 06252-120

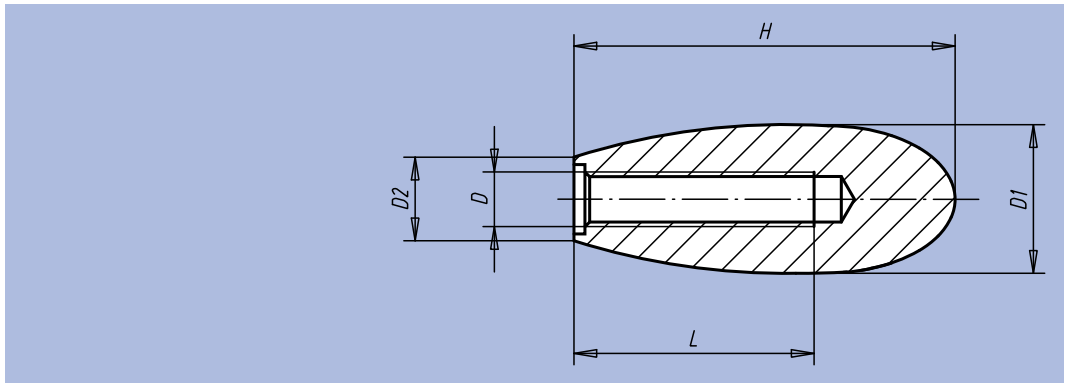

Order No.	D	D1	D2	H	L min.	g
06252-050	M5	14	7	34	25	8
06252-080	M8	22	14	60	25	17
06252-100	M10	27	15,5	70	25	25
06252-120	M12	30	16	62	26	37
06252-160	M16	35	22	85	30	67

Clamp Grips



Material, Surface finish:
Anthracite grey thermoplastic;
bush and threaded bolt in steel 5.8, blue chromated or stainless steel 1.4305, natural finish

Sample order:
nlm 06253-50106X30
(grip cap colour traffic red; please also indicate dimension L)

Note:
The screw lengths 15, 35 and 45 are not available in stainless steel..

Δ Add the desired grip cap colour here; no colour code is required with anthracite grey grip caps

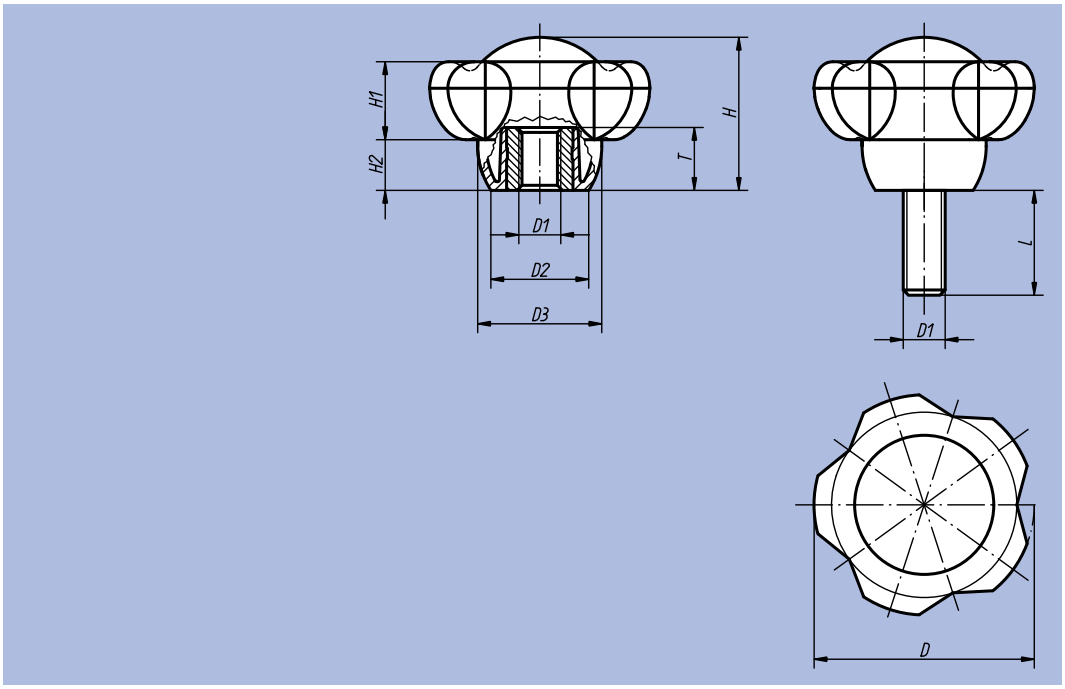

anthracite grey	light grey Δ = 5	traffic red Δ = 6	bright yellow Δ = 7
RAL 7021	RAL 7035	RAL 3020	RAL 1021

Order No. Surface finish bush in steel	Order No. Surface finish bush in stainless steel	Surface finish	D	D1	D2	D3	H	H1	H2	T	kg
06253-5008Δ	06253-50081Δ	internal thread	50	M8	22,2	28,2	34,8	17,8	11,5	14	0,030
06253-5010Δ	06253-50101Δ	internal thread	50	M10	22,2	28,2	34,8	17,8	11,5	14	0,020
06253-5012Δ	06253-50121Δ	internal thread	50	M12	22,2	28,2	34,8	17,8	11,5	18	0,010
06253-6310Δ	06253-63101Δ	internal thread	63	M10	28	35,5	44	22,5	14,5	14	0,070
06253-6312Δ	06253-63121Δ	internal thread	63	M12	28	35,5	44	22,5	14,5	18	0,050
06253-6316Δ	-	internal thread	63	M16	28	35,5	44	22,5	14,5	18	0,040

Order No. Surface finish bolt in steel	Order No. Surface finish bolt in stainless steel	Surface finish	D	D1	D2	D3	H	H1	H2	L = screw length
06253-5010ΔX	06253-50101ΔX	external thread	50	M10	22,2	28,2	34,8	17,8	11,5	15 / 20 / 25 / 30 / 35 / 40 / 45 / 50 / 60
06253-5012ΔX	-	external thread	50	M12	22,2	28,2	34,8	17,8	11,5	15 / 20 / 25 / 30 / 35 / 40 / 45 / 50 / 60
06253-6310ΔX	06253-63101ΔX	external thread	63	M10	28	35,5	44	22,5	14,5	20 / 25 / 30 / 35 / 40 / 45 / 50 / 60
06253-6312ΔX	-	external thread	63	M12	28	35,5	44	22,5	14,5	20 / 25 / 30 / 35 / 40 / 45 / 50 / 60

Handwheels without grip



Material, Surface finish:
Anthracite grey thermoplastic;
steel parts black oxide finish

Sample order:
nlm 06262-108008

Note:
The hub cover is supplied unassembled.
The handwheels can be secured axially to the shaft via feather connection by cross-pinning or with a socket head screw to DIN 6912 and a washer to DIN 7349.

hub slot according to DIN 6885-1

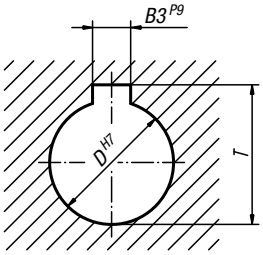

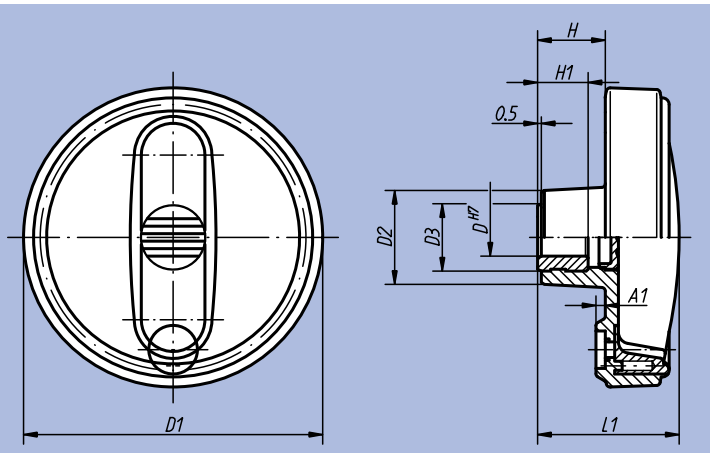

assembly example

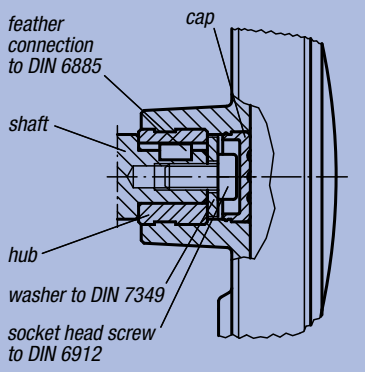

Order No. Surface finish hub without slot	Order No. Surface finish hub with slot	Size	D	D1	D2	D3	A1	H	H1	L1	B3	T	kg
06262-108008	06262-10800802	1	8	80	25	19	2,5	17,5	13	37,5	2	9	0,074
06262-108010	06262-10801003	1	10	80	25	19	2,5	17,5	13	37,5	3	11,4	0,074
06262-108012	06262-10801204	1	12	80	25	19	2,5	17,5	13	37,5	4	13,8	0,074
06262-210010	06262-21001003	2	10	100	28	19	3	20	13	44	3	11,4	0,125
06262-210012	06262-21001204	2	12	100	28	19	3	20	13	44	4	13,8	0,125
06262-312512	06262-31251204	3	12	125	35	25	4	23,5	18,5	53	4	13,8	0,229
06262-312514	06262-31251405	3	14	125	35	25	4	23,5	18,5	53	5	16,3	0,229
06262-312516	06262-31251605	3	16	125	35	25	4	23,5	18,5	53	5	18,3	0,229
06262-416014	06262-41601405	4	14	160	45	25	5,6	28	18,5	64,5	5	16,3	0,425
06262-416016	06262-41601605	4	16	160	45	25	5,6	28	18,5	64,5	5	18,3	0,425

Handwheels

with cylindrical revolving grip



Material, Surface finish:
Anthracite grey thermoplastic;
steel parts black oxide finish

Sample order:
nlm 06263-108008

Note:
The hub cover and the Cylindrical Revolving Grip are supplied unassembled. In order to assemble the grip, the axis must be screwed into the receiving hole.
The handwheels can be secured axially to the shaft via feather connection by cross-pinning or with a socket head screw to DIN 6912 and a washer to DIN 7349.
Assembly example see 06262.

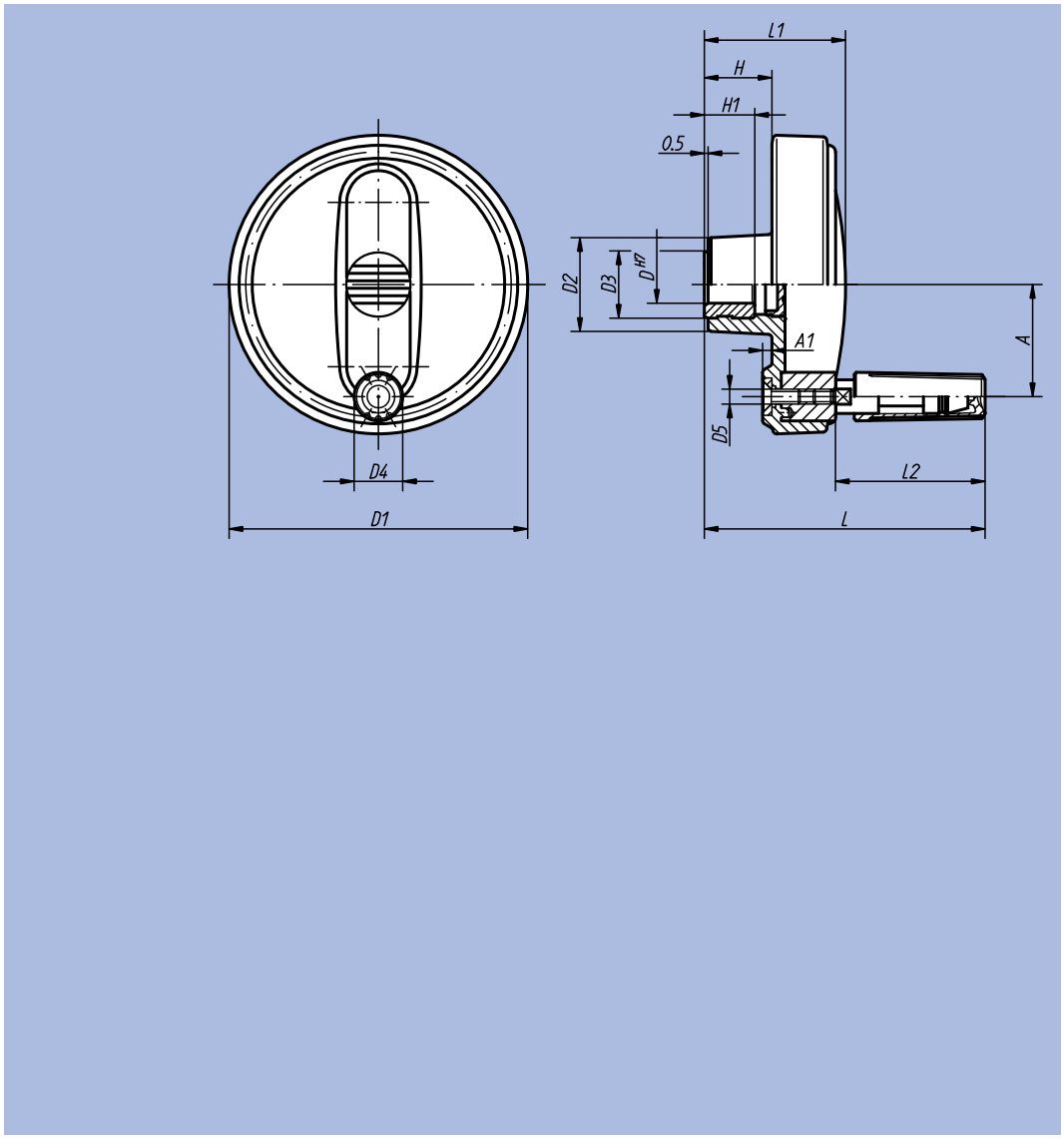

hub slot according to
DIN 6885-1

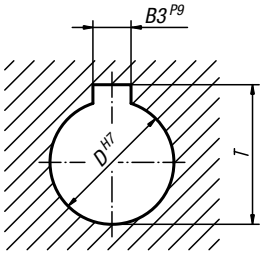

Order No. Surface finish hub without slot	Order No. Surface finish hub with slot	Size	D	D1	D2	D3	D4	D5	A	A1	H	H1	L	L1	L2	B3	T	kg
06263-108008	06263-10800802	1	8	80	25	19	13	M4	30	2,5	17,5	13	75	37,5	40	2	9	0,101
06263-108010	06263-10801003	1	10	80	25	19	13	M4	30	2,5	17,5	13	75	37,5	40	3	11,4	0,101
06263-108012	06263-10801204	1	12	80	25	19	13	M4	30	2,5	17,5	13	75	37,5	40	4	13,8	0,101
06263-210010	06263-21001003	2	10	100	28	19	16	M5	38	3	20	13	90	44	49,5	3	11,4	0,178
06263-210012	06263-21001204	2	12	100	28	19	16	M5	38	3	20	13	90	44	49,5	4	13,8	0,178
06263-312512	06263-31251204	3	12	125	35	25	20	M6	47,5	4	23,5	18,5	109	53	60	4	13,8	0,318
06263-312514	06263-31251405	3	14	125	35	25	20	M6	47,5	4	23,5	18,5	109	53	60	5	16,3	0,318
06263-312516	06263-31251605	3	16	125	35	25	20	M6	47,5	4	23,5	18,5	109	53	60	5	18,3	0,318
06263-416014	06263-41601405	4	14	160	45	25	25	M8	62	5,6	28	18,5	144	64,5	83,5	5	16,3	0,636
06263-416016	06263-41601605	4	16	160	45	25	25	M8	62	5,6	28	18,5	144	64,5	83,5	5	18,3	0,636

Handwheels

with cylindrical fold-away grip



Material, Surface finish:
Anthracite grey thermoplastic;
steel parts black oxide finish

Sample order:
nlm 06264-108008

Note:
The hub cover is supplied unassembled.
The handwheels can be secured axially to the shaft via feather connection by cross-pinning or with a socket head screw to DIN 6912 and a washer to DIN 7349.
Assembly example see 06262.

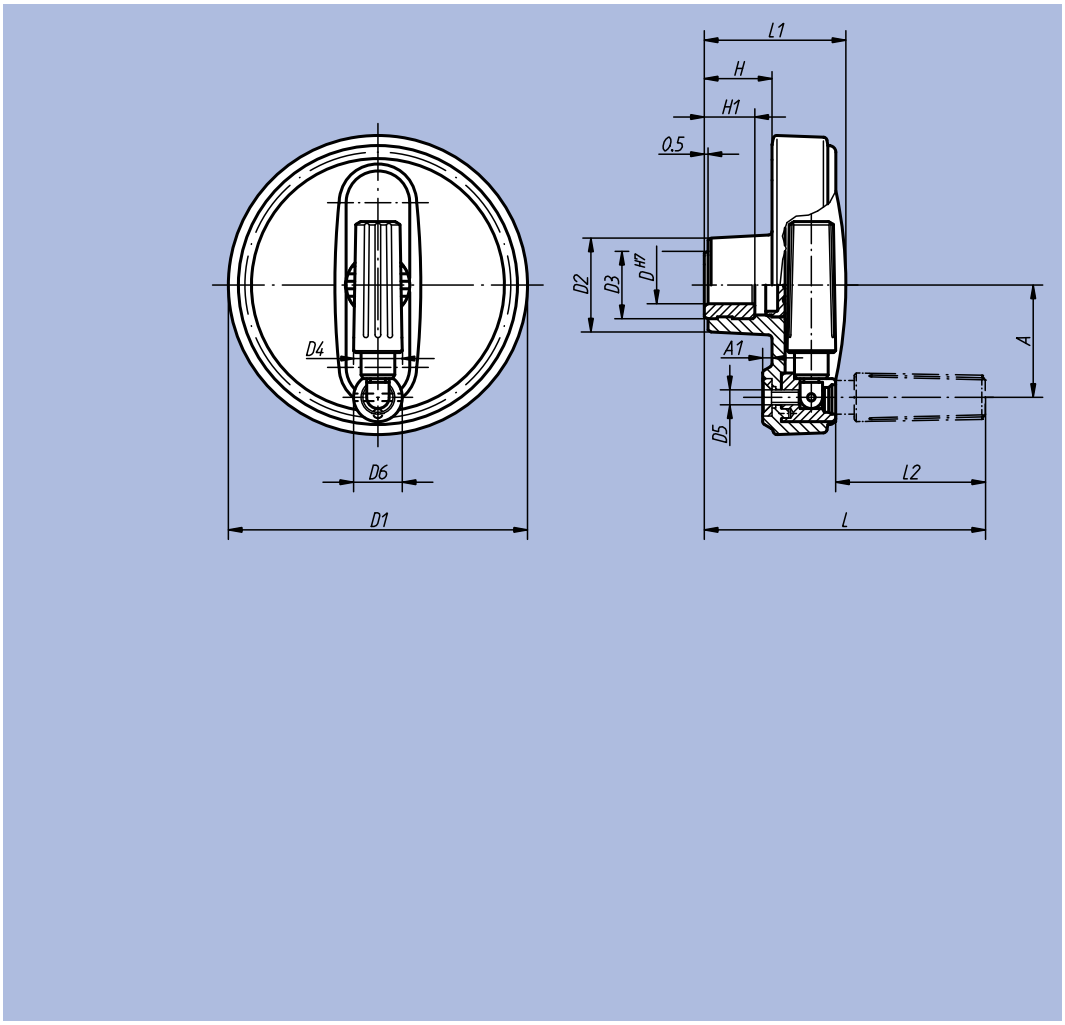

hub slot according to DIN 6885-1

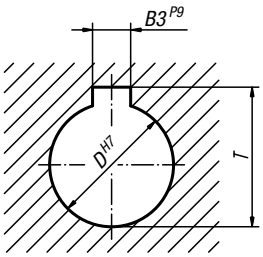

Order No. Surface finish hub without slot	Order No. Surface finish hub with slot	Size	D	D1	D2	D3	D4	D5	D6	A	A1	H	H1	L	L1	L2	B3	T	□ kg
06264-108008	06264-10800802	1	8	80	25	19	13	M4	13	30	2,5	17,5	13	75	37,5	40	2	9	0,100
06264-108010	06264-10801003	1	10	80	25	19	13	M4	13	30	2,5	17,5	13	75	37,5	40	3	11,4	0,100
06264-108012	06264-10801204	1	12	80	25	19	13	M4	13	30	2,5	17,5	13	75	37,5	40	4	13,8	0,100
06264-210010	06264-21001003	2	10	100	28	19	16	M5	16	38	3	20	13	90	44	49	3	11,4	0,179
06264-210012	06264-21001204	2	12	100	28	19	16	M5	16	38	3	20	13	90	44	49	4	13,8	0,179
06264-312512	06264-31251204	3	12	125	35	25	20	M6	20	47,5	4	23,5	18,5	109	53	59,5	4	13,8	0,328
06264-312514	06264-31251405	3	14	125	35	25	20	M6	20	47,5	4	23,5	18,5	109	53	59,5	5	16,3	0,328
06264-312516	06264-31251605	3	16	125	35	25	20	M6	20	47,5	4	23,5	18,5	109	53	59,5	5	18,3	0,328
06264-416014	06264-41601405	4	14	160	45	25	25	M8	26	62	5,6	28	18,5	144	64,5	83,5	5	16,3	0,651
06264-416016	06264-41601605	4	16	160	45	25	25	M8	26	62	5,6	28	18,5	144	64,5	83,5	5	18,3	0,651

Handwheels

with cylindrical safety grip



Material, Surface finish:
Wheel body and grip in anthracite grey thermoplastic;
steel parts black oxide finish

Sample order:
nlm 06265-108008

Note:
The hub cover is supplied unassembled. The handwheels can be secured axially to the shaft via feather connection by cross-pinning or with a socket head screw to DIN 6912 and a washer to DIN 7349.
Two steps have to be executed to bring the Cylindrical Safety Grip into operating position:
- Swivel the grip around the axis of rotation until it stops (90°).
- Press the grip in axial direction into locking position.

The pressed-in position is the most comfortable position to crank. The grip returns automatically after letting go.
Assembly example see 06262.

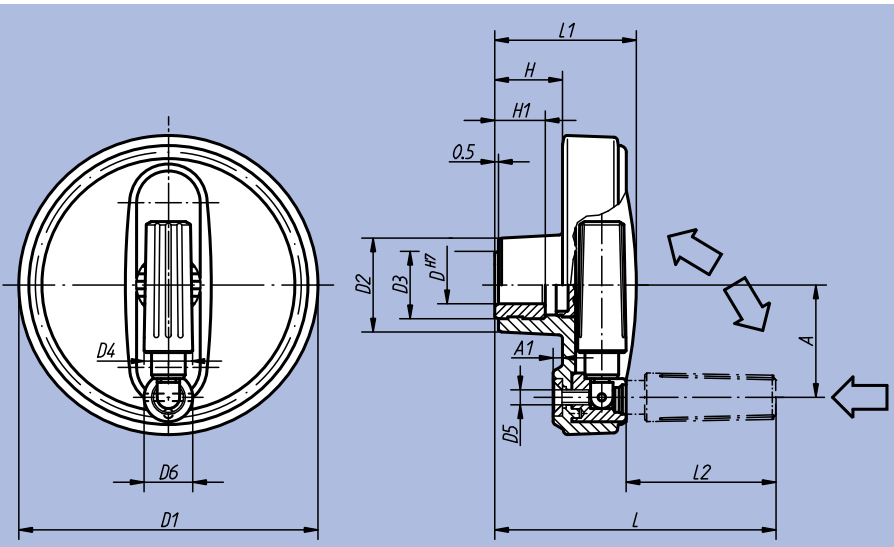

hub slot according to DIN 6885-1

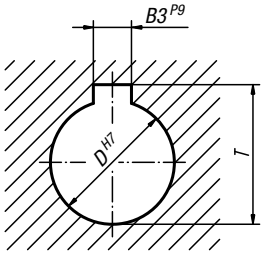

Order No. Surface finish hub without slot	Order No. Surface finish hub with slot	Size	D	D1	D2	D3	D4	D5	D6	A	A1	H	H1	L	L1	L2	B3	T	kg
06265-108008	06265-10800802	1	8	80	25	19	13	M4	13	30	2,5	17,5	13	73	37,5	38	2	9	0,100
06265-108010	06265-10801003	1	10	80	25	19	13	M4	13	30	2,5	17,5	13	73	37,5	38	3	11,4	0,100
06265-108012	06265-10801204	1	12	80	25	19	13	M4	13	30	2,5	17,5	13	73	37,5	38	4	13,8	0,100
06265-210010	06265-21001003	2	10	100	28	19	16	M5	16	38	3	20	13	88,5	44	47,5	3	11,4	0,179
06265-210012	06265-21001204	2	12	100	28	19	16	M5	16	38	3	20	13	88,5	44	47,5	4	13,8	0,179
06265-312512	06265-31251204	3	12	125	35	25	20	M6	20	47,5	4	23,5	18,5	108	53	58,5	4	13,8	0,328
06265-312514	06265-31251405	3	14	125	35	25	20	M6	20	47,5	4	23,5	18,5	108	53	58,5	5	16,3	0,328
06265-312516	06265-31251605	3	16	125	35	25	20	M6	20	47,5	4	23,5	18,5	108	53	58,5	5	18,3	0,328
06265-416014	06265-41601405	4	14	160	45	25	25	M8	26	62	5,6	28	18,5	142,5	64,5	82	5	16,3	0,651
06265-416016	06265-41601605	4	16	160	45	25	25	M8	26	62	5,6	28	18,5	142,5	64,5	82	5	18,3	0,651

Knurled Wheels



Material, Surface finish:
Anthracite grey thermoplastic; bush and threaded bolt in steel 5.8, blue chromated or in stainless steel 1.4305, natural finish

Sample order:
nlm 06267-51056X10
(grip cap colour traffic red; please also indicate dimension L)

Note:
Δ Add the desired wheel cap colour here; no colour code is required with anthracite grey wheel caps.

Form D
threaded bush
without wheel cap

Form E
bush with pocket hole
without wheel cap

Form K
threaded bush
with wheel cap

Form H
bush with pocket hole
with wheel cap

Form L
with external thread

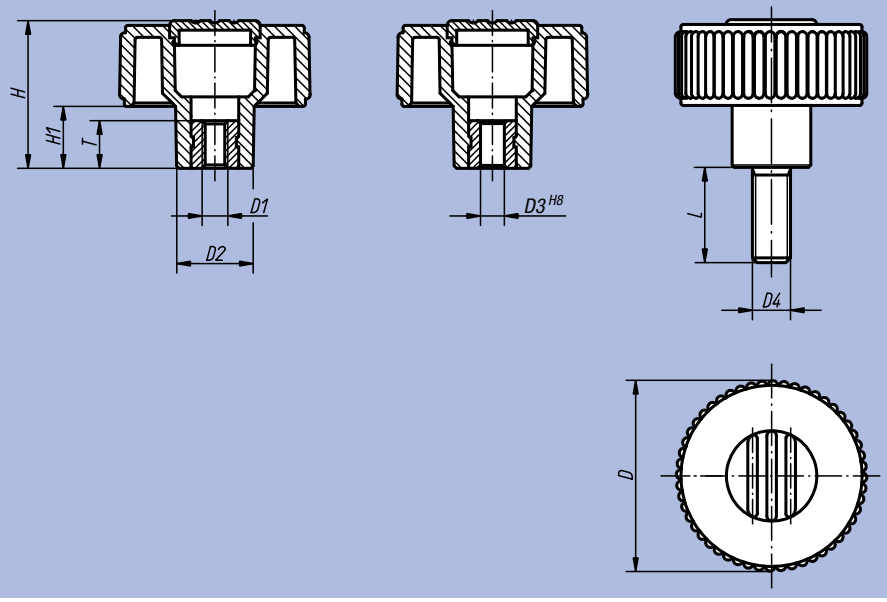

anthracite grey	light grey Δ = 5	traffic red Δ = 6	bright yellow Δ = 7
RAL 7021	RAL 7035	RAL 3020	RAL 1021

Order No.	Form	Surface finish	Size	D	D1	D2	H	H1	T
06266-1105	D	bush in steel	1	40	M5	16,5	31	13	10
06266-1106	D	bush in steel	1	40	M6	16,5	31	13	10
06266-1108	D	bush in steel	1	40	M8	16,5	31	13	14
06266-1208	D	bush in steel	2	50	M8	18	36	15	14
06266-1210	D	bush in steel	2	50	M10	18	36	15	14
06266-1310	D	bush in steel	3	63	M10	22	41	17	14
06266-1312	D	bush in steel	3	63	M12	22	41	17	18
06267-1105	D	bush in stainless steel	1	40	M5	16,5	31	13	10
06267-1106	D	bush in stainless steel	1	40	M6	16,5	31	13	10
06267-1108	D	bush in stainless steel	1	40	M8	16,5	31	13	14
06267-1208	D	bush in stainless steel	2	50	M8	18	36	15	14
06267-1210	D	bush in stainless steel	2	50	M10	18	36	15	14
06267-1310	D	bush in stainless steel	3	63	M10	22	41	17	14
06267-1312	D	bush in stainless steel	3	63	M12	22	41	17	18

Knurled Wheels

Order No.	Form	Surface finish	Size	D	D1	D2	H	H1	T
06266-2105Δ	K	bush in steel	1	40	M5	16,5	31	13	10
06266-2106Δ	K	bush in steel	1	40	M6	16,5	31	13	10
06266-2108Δ	K	bush in steel	1	40	M8	16,5	31	13	14
06266-2208Δ	K	bush in steel	2	50	M8	18	36	15	14
06266-2210Δ	K	bush in steel	2	50	M10	18	36	15	14
06266-2310Δ	K	bush in steel	3	63	M10	22	41	17	14
06266-2312Δ	K	bush in steel	3	63	M12	22	41	17	18
06267-2105Δ	K	bush in stainless steel	1	40	M5	16,5	31	13	10
06267-2106Δ	K	bush in stainless steel	1	40	M6	16,5	31	13	10
06267-2108Δ	K	bush in stainless steel	1	40	M8	16,5	31	13	14
06267-2208Δ	K	bush in stainless steel	2	50	M8	18	36	15	14
06267-2210Δ	K	bush in stainless steel	2	50	M10	18	36	15	14
06267-2310Δ	K	bush in stainless steel	3	63	M10	22	41	17	14
06267-2312Δ	K	bush in stainless steel	3	63	M12	22	41	17	18

Order No.	Form	Surface finish	Size	D	D2	D3	H	H1	T
06266-3106	E	bush in steel	1	40	16,5	6	31	13	10
06266-3208	E	bush in steel	2	50	18	8	36	15	14
06266-3310	E	bush in steel	3	63	22	10	41	17	14

Order No.	Form	Surface finish	Size	D	D2	D3	H	H1	T
06266-4106Δ	H	bush in steel	1	40	16,5	6	31	13	10
06266-4208Δ	H	bush in steel	2	50	18	8	36	15	14
06266-4310Δ	H	bush in steel	3	63	22	10	41	17	14

Order No.	Form	Surface finish	Size	D	D2	D4	H	H1	L = screw length
06266-5105ΔX	L	bolt in steel	1	40	16,5	M5	31	13	10 / 20 / 40
06266-5106ΔX	L	bolt in steel	1	40	16,5	M6	31	13	10 / 20 / 40
06266-5108ΔX	L	bolt in steel	1	40	16,5	M8	31	13	15 / 30 / 60
06266-5208ΔX	L	bolt in steel	2	50	18	M8	36	15	15 / 30 / 60
06266-5210ΔX	L	bolt in steel	2	50	18	M10	36	15	20 / 30 / 60
06266-5310ΔX	L	bolt in steel	3	63	22	M10	41	17	20 / 30 / 60
06266-5312ΔX	L	bolt in steel	3	63	22	M12	41	17	30 / 60
06267-5105ΔX	L	bolt in stainless steel	1	40	16,5	M5	31	13	10 / 20
06267-5106ΔX	L	bolt in stainless steel	1	40	16,5	M6	31	13	10 / 20 / 40
06267-5108ΔX	L	bolt in stainless steel	1	40	16,5	M8	31	13	15 / 30 / 60
06267-5208ΔX	L	bolt in stainless steel	2	50	18	M8	36	15	15 / 30 / 60
06267-5210ΔX	L	bolt in stainless steel	2	50	18	M10	36	15	20 / 30 / 60
06267-5310ΔX	L	bolt in stainless steel	3	63	22	M10	41	17	20 / 30 / 60

Positioning Wheels



Material, Surface finish:
Anthracite grey thermoplastic;
bush in steel 5.8,
blue chromated

Sample order:
nlm 06268-21066
(wheel cap colour traffic red)

Note:
ΔAdd the desired wheel cap colour here; no colour code is required with anthracite grey wheel caps.

Form H
without transverse hole

Form M
with transverse hole
and grub screw

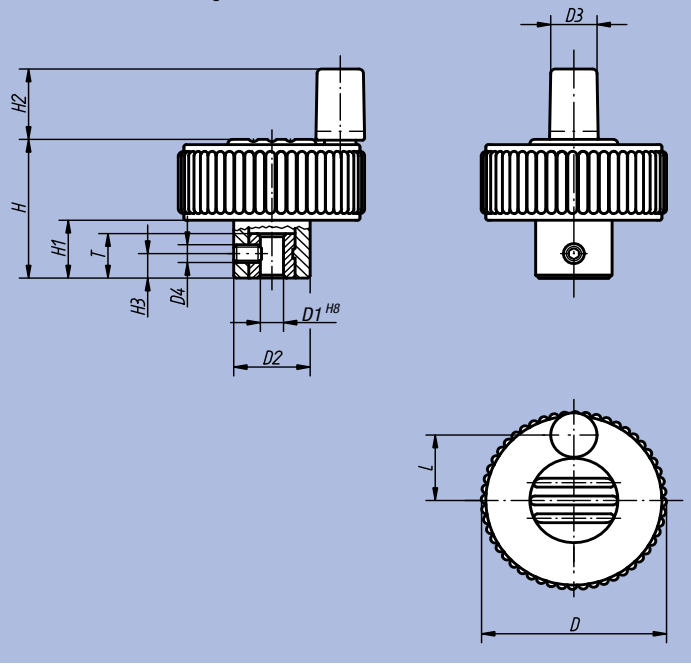

anthracite grey	light grey Δ = 5	traffic red Δ = 6	bright yellow Δ = 7
RAL 7021	RAL 7035	RAL 3020	RAL 1021

Order No.	Form	Size	D	D1	D2	D3	D4	H	H1	H2	H3	L	T
06268-2106Δ	H	1	40	6	16,5	10	-	31	13	16	-	15	10
06268-2206Δ	H	2	50	6	18	10	-	36	15	16	-	18,5	10
06268-2308Δ	H	3	63	8	22	10	-	41	17	16	-	25	14
06268-1106Δ	M	1	40	6	16,5	10	M4	31	13	16	5,5	15	10
06268-1206Δ	M	2	50	6	18	10	M4	36	15	16	5,5	18,5	10
06268-1308Δ	M	3	63	8	22	10	M4	41	17	16	8	25	14

Notes:

Grey Cast Iron Handwheels

to DIN 950



Material:
Handwheel in grey cast iron; machine handle in steel

Surface finish:
Wheel rim turned and polished, centre bore is concentric and parallel with outside of handle to IT 12.

Sample order:
nlm 06271-4080X10

On request:
Hubs with square socket or plastic-coated handwheels.

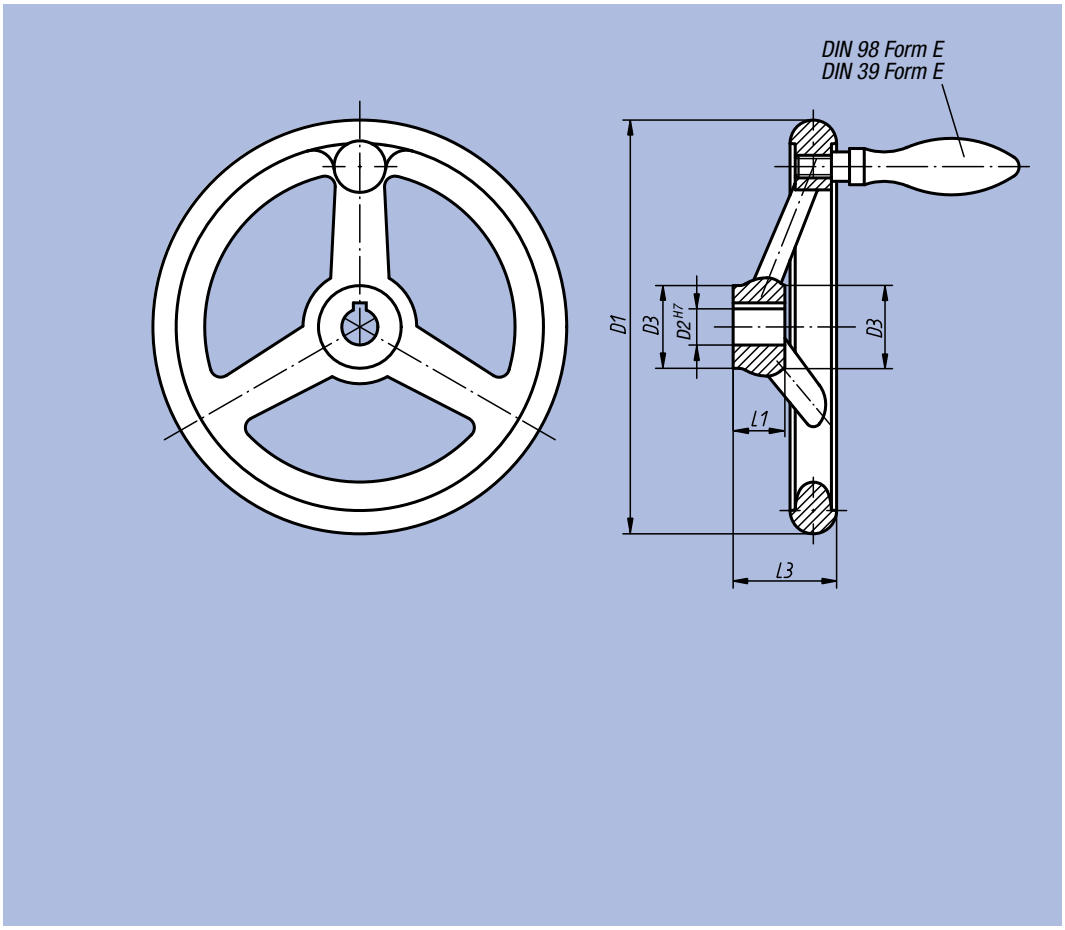

hub slot according to DIN 6885-1

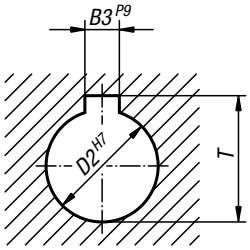

Grey Cast Iron Handwheels to DIN 950 without machine handle

Order No. Surface finish hub without slot	Order No. Surface finish hub with slot	D1	D2 line 1	D2 line 2	D3	L1	L3	B3 line 1	B3 line 2	T line 1	T line 2	Number of spokes	kg
06271-0080X10	06271-1080X10	80	10	-	24	16	29	3	-	11,4	-	3	0,350
06271-0080X12	06271-1080X12	80	-	12	24	16	29	-	4	-	13,8	3	0,350
06271-0100X10	06271-1100X10	100	10	-	26	17	33	3	-	11,4	-	3	0,600
06271-0100X12	06271-1100X12	100	-	12	26	17	33	-	4	-	13,8	3	0,600
06271-0125X12	06271-1125X12	125	12	-	28	18	36	4	-	13,8	-	3	0,800
06271-0125X14	06271-1125X14	125	-	14	28	18	36	-	5	-	16,3	3	0,800
06271-0140X14	06271-1140X14	140	14	-	30	19	39	5	-	16,3	-	3	1,000
06271-0140X16	06271-1140X16	140	-	16	30	19	39	-	5	-	18,3	3	1,000
06271-0160X14	06271-1160X14	160	14	-	32	20	40	5	-	16,3	-	3	1,350
06271-0160X16	06271-1160X16	160	-	16	32	20	40	-	5	-	18,3	3	1,350
06271-0180X16	06271-1180X16	180	16	-	35	22	43	5	-	18,3	-	3	1,600
06271-0180X18	06271-1180X18	180	-	18	35	22	43	-	6	-	20,8	3	1,600
06271-0200X18	06271-1200X18	200	18	-	38	24	45	6	-	20,8	-	3	2,300
06271-0200X22	06271-1200X22	200	-	22	38	24	45	-	6	-	24,8	3	2,300
06271-0250X22	06271-1250X22	250	22	-	45	28	50	6	-	24,8	-	5	4,250
06271-0250X26	06271-1250X26	250	-	26	45	28	50	-	8	-	29,3	5	4,250
06271-0315X26	06271-1315X26	315	26	-	53	33	56	8	-	29,3	-	5	6,400
06271-0315X30	06271-1315X30	315	-	30	53	33	56	-	8	-	33,3	5	6,400
06271-0400X30	06271-1400X30	400	30	-	65	38	63	8	-	33,3	-	5	10,500
06271-0400X34	06271-1400X34	400	-	34	65	38	63	-	10	-	37,3	5	10,500
06271-0500X34	06271-1500X34	500	34	-	78	45	72	10	-	37,3	-	5	17,000
06271-0500X40	06271-1500X40	500	-	40	78	45	72	-	12	-	43,3	5	17,000

Grey Cast Iron Handwheels

to DIN 950

Grey Cast Iron Handwheels to DIN 950 with fixed machine handle

Order No. Surface finish hub without slot	Order No. Surface finish hub with slot	D1	D2 line 1	D2 line 2	D3	L1	L3	B3 line 1	B3 line 2	T line 1	T line 2	Number of spokes	fixed machine handle DIN 39 Form E	kg
06271-2080X10	06271-3080X10	80	10	-	24	16	29	3	-	11,4	-	3	ø16 x M6x50	0,400
06271-2080X12	06271-3080X12	80	-	12	24	16	29	-	4	-	13,8	3	ø16 x M6x50	0,400
06271-2100X10	06271-3100X10	100	10	-	26	17	33	3	-	11,4	-	3	ø16 x M6x50	0,650
06271-2100X12	06271-3100X12	100	-	12	26	17	33	-	4	-	13,8	3	ø16 x M6x50	0,650
06271-2125X12	06271-3125X12	125	12	-	28	18	36	4	-	13,8	-	3	ø20 x M8x64	0,890
06271-2125X14	06271-3125X14	125	-	14	28	18	36	-	5	-	16,3	3	ø20 x M8x64	0,890
06271-2140X14	06271-3140X14	140	14	-	30	19	39	5	-	16,3	-	3	ø20 x M8x64	1,090
06271-2140X16	06271-3140X16	140	-	16	30	19	39	-	5	-	18,3	3	ø20 x M8x64	1,090
06271-2160X14	06271-3160X14	160	14	-	32	20	40	5	-	16,3	-	3	ø25 x M10x80	1,530
06271-2160X16	06271-3160X16	160	-	16	32	20	40	-	5	-	18,3	3	ø25 x M10x80	1,530
06271-2180X16	06271-3180X16	180	16	-	35	22	43	5	-	18,3	-	3	ø25 x M10x80	1,780
06271-2180X18	06271-3180X18	180	-	18	35	22	43	-	6	-	20,8	3	ø25 x M10x80	1,780
06271-2200X18	06271-3200X18	200	18	-	38	24	45	6	-	20,8	-	3	ø25 x M10x80	2,480
06271-2200X22	06271-3200X22	200	-	22	38	24	45	-	6	-	24,8	3	ø25 x M10x80	2,480
06271-2250X22	06271-3250X22	250	22	-	45	28	50	6	-	24,8	-	5	ø32 x M12x100	4,610
06271-2250X26	06271-3250X26	250	-	26	45	28	50	-	8	-	29,3	5	ø32 x M12x100	4,610
06271-2315X26	06271-3315X26	315	26	-	53	33	56	8	-	29,3	-	5	ø32 x M12x100	6,760
06271-2315X30	06271-3315X30	315	-	30	53	33	56	-	8	-	33,3	5	ø32 x M12x100	6,760
06271-2400X30	06271-3400X30	400	30	-	65	38	63	8	-	33,3	-	5	ø36 x M16x112	11,030
06271-2400X34	06271-3400X34	400	-	34	65	38	63	-	10	-	37,3	5	ø36 x M16x112	11,030
06271-2500X34	06271-3500X34	500	34	-	78	45	72	10	-	37,3	-	5	ø36 x M16x112	17,530
06271-2500X40	06271-3500X40	500	-	40	78	45	72	-	12	-	43,3	5	ø36 x M16x112	17,530

Grey Cast Iron Handwheels to DIN 950 with revolving machine handle

Order No. Surface finish hub without slot	Order No. Surface finish hub with slot	D1	D2 line 1	D2 line 2	D3	L1	L3	B3 line 1	B3 line 2	T line 1	T line 2	Number of spokes	revolving machine handle DIN 98 Form E	kg
06271-4080X10	06271-5080X10	80	10	-	24	16	29	3	-	11,4	-	3	ø16 x M6x54,5	0,400
06271-4080X12	06271-5080X12	80	-	12	24	16	29	-	4	-	13,8	3	ø16 x M6x54,5	0,400
06271-4100X10	06271-5100X10	100	10	-	26	17	33	3	-	11,4	-	3	ø16 x M6x54,5	0,650
06271-4100X12	06271-5100X12	100	-	12	26	17	33	-	4	-	13,8	3	ø16 x M6x54,5	0,650
06271-4125X12	06271-5125X12	125	12	-	28	18	36	4	-	13,8	-	3	ø20 x M8x67	0,890
06271-4125X14	06271-5125X14	125	-	14	28	18	36	-	5	-	16,3	3	ø20 x M8x67	0,890
06271-4140X14	06271-5140X14	140	14	-	30	19	39	5	-	16,3	-	3	ø20 x M8x67	1,090
06271-4140X16	06271-5140X16	140	-	16	30	19	39	-	5	-	18,3	3	ø20 x M8x67	1,090
06271-4160X14	06271-5160X14	160	14	-	32	20	40	5	-	16,3	-	3	ø25 x M10x83	1,530
06271-4160X16	06271-5160X16	160	-	16	32	20	40	-	5	-	18,3	3	ø25 x M10x83	1,530
06271-4180X16	06271-5180X16	180	16	-	35	22	43	5	-	18,3	-	3	ø25 x M10x83	1,780
06271-4180X18	06271-5180X18	180	-	18	35	22	43	-	6	-	20,8	3	ø25 x M10x83	1,780
06271-4200X18	06271-5200X18	200	18	-	38	24	45	6	-	20,8	-	3	ø25 x M10x83	2,480
06271-4200X22	06271-5200X22	200	-	22	38	24	45	-	6	-	24,8	3	ø25 x M10x83	2,480
06271-4250X22	06271-5250X22	250	22	-	45	28	50	6	-	24,8	-	5	ø32 x M12x105,5	4,610
06271-4250X26	06271-5250X26	250	-	26	45	28	50	-	8	-	29,3	5	ø32 x M12x105,5	4,610
06271-4315X26	06271-5315X26	315	26	-	53	33	56	8	-	29,3	-	5	ø32 x M12x105,5	6,760
06271-4315X30	06271-5315X30	315	-	30	53	33	56	-	8	-	33,3	5	ø32 x M12x105,5	6,760
06271-4400X30	06271-5400X30	400	30	-	65	38	63	8	-	33,3	-	5	ø36 x M16x117	11,030
06271-4400X34	06271-5400X34	400	-	34	65	38	63	-	10	-	37,3	5	ø36 x M16x117	11,030
06271-4500X34	06271-5500X34	500	34	-	78	45	72	10	-	37,3	-	5	ø36 x M16x117	17,530
06271-4500X40	06271-5500X40	500	-	40	78	45	72	-	12	-	43,3	5	ø36 x M16x117	17,530

Aluminium Handwheels

to DIN 950



Material:
Handwheel and machine handle in aluminium; axle part in steel, black oxide finish

Surface finish:
Wheel rim turned and polished, centre bore is concentric and parallel with outside of handle to IT 12.

Sample order:
nlm 06273-4080X10

On request:
Hubs with square socket or plastic-coated handwheels.

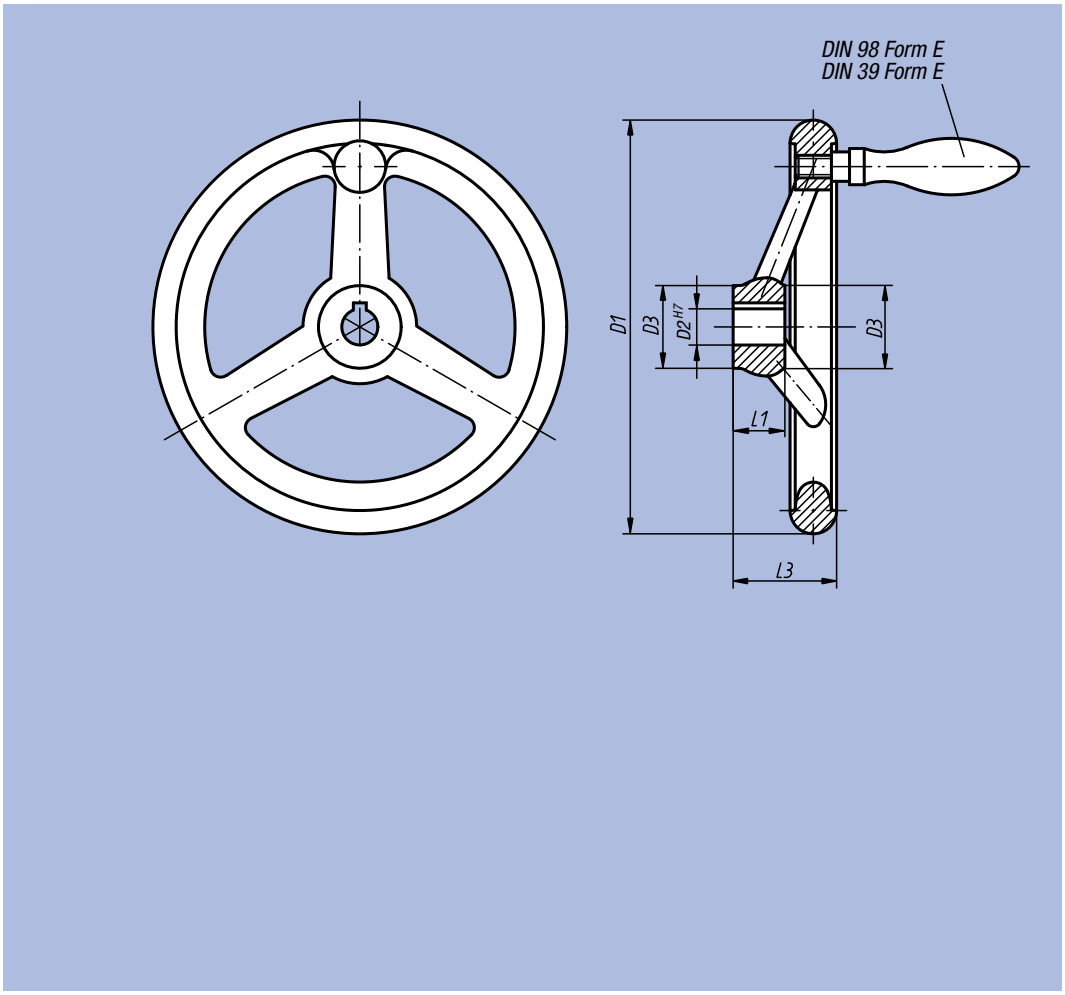

hub slot according to DIN 6885-1

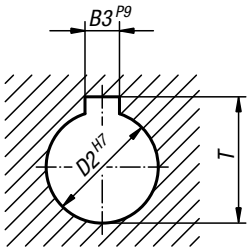

Aluminium Handwheels to DIN 950 without machine handle

Order No. Surface finish hub without slot	Order No. Surface finish hub with slot	D1	D2 line 1	D2 line 2	D3	L1	L3	B3 line 1	B3 line 2	T line 1	T line 2	Number of spokes	kg
06273-0080X10	06273-1080X10	80	10	-	24	16	29	3	-	11,4	-	3	0,125
06273-0080X12	06273-1080X12	80	-	12	24	16	29	-	4	-	13,8	3	0,125
06273-0100X10	06273-1100X10	100	10	-	26	17	33	3	-	11,4	-	3	0,220
06273-0100X12	06273-1100X12	100	-	12	26	17	33	-	4	-	13,8	3	0,220
06273-0125X12	06273-1125X12	125	12	-	28	18	36	4	-	13,8	-	3	0,305
06273-0125X14	06273-1125X14	125	-	14	28	18	36	-	5	-	16,3	3	0,305
06273-0140X14	06273-1140X14	140	14	-	30	19	39	5	-	16,3	-	3	0,400
06273-0140X16	06273-1140X16	140	-	16	30	19	39	-	5	-	18,3	3	0,400
06273-0160X14	06273-1160X14	160	14	-	32	20	40	5	-	16,3	-	3	0,530
06273-0160X16	06273-1160X16	160	-	16	32	20	40	-	5	-	18,3	3	0,530
06273-0180X16	06273-1180X16	180	16	-	35	22	43	5	-	18,3	-	3	0,675
06273-0180X18	06273-1180X18	180	-	18	35	22	43	-	6	-	20,8	3	0,675
06273-0200X18	06273-1200X18	200	18	-	38	24	45	6	-	20,8	-	3	0,900
06273-0200X22	06273-1200X22	200	-	22	38	24	45	-	6	-	24,8	3	0,900
06273-0250X22	06273-1250X22	250	22	-	45	28	50	6	-	24,8	-	5	1,570
06273-0250X26	06273-1250X26	250	-	26	45	28	50	-	8	-	29,3	5	1,570
06273-0315X26	06273-1315X26	315	26	-	53	33	56	8	-	29,3	-	5	2,490
06273-0315X30	06273-1315X30	315	-	30	53	33	56	-	8	-	33,3	5	2,490
06273-0400X30	06273-1400X30	400	30	-	65	38	63	8	-	33,3	-	5	4,100
06273-0400X34	06273-1400X34	400	-	34	65	38	63	-	10	-	37,3	5	4,100
06273-0500X34	06273-1500X34	500	34	-	78	45	72	10	-	37,3	-	5	6,130
06273-0500X40	06273-1500X40	500	-	40	78	45	72	-	12	-	43,3	5	6,130

Aluminium Handwheels

to DIN 950

Aluminium Handwheels to DIN 950 with fixed machine handle

Order No. Surface finish hub without slot	Order No. Surface finish hub with slot	D1	D2 line 1	D2 line 2	D3	L1	L3	B3 line 1	B3 line 2	T line 1	T line 2	Number of spokes	fixed machine handle DIN 39 Form E	kg
06273-2080X10	06273-3080X10	80	10	-	24	16	29	3	-	11,4	-	3	ø16 x M6x50	0,145
06273-2080X12	06273-3080X12	80	-	12	24	16	29	-	4	-	13,8	3	ø16 x M6x50	0,145
06273-2100X10	06273-3100X10	100	10	-	26	17	33	3	-	11,4	-	3	ø16 x M6x50	0,240
06273-2100X12	06273-3100X12	100	-	12	26	17	33	-	4	-	13,8	3	ø16 x M6x50	0,240
06273-2125X12	06273-3125X12	125	12	-	28	18	36	4	-	13,8	-	3	ø20 x M8x64	0,340
06273-2125X14	06273-3125X14	125	-	14	28	18	36	-	5	-	16,3	3	ø20 x M8x64	0,340
06273-2140X14	06273-3140X14	140	14	-	30	19	39	5	-	16,3	-	3	ø20 x M8x64	0,440
06273-2140X16	06273-3140X16	140	-	16	30	19	39	-	5	-	18,3	3	ø20 x M8x64	0,440
06273-2160X14	06273-3160X14	160	14	-	32	20	40	5	-	16,3	-	3	ø25 x M10x80	0,610
06273-2160X16	06273-3160X16	160	-	16	32	20	40	-	5	-	18,3	3	ø25 x M10x80	0,610
06273-2180X16	06273-3180X16	180	16	-	35	22	43	5	-	18,3	-	3	ø25 x M10x80	0,755
06273-2180X18	06273-3180X18	180	-	18	35	22	43	-	6	-	20,8	3	ø25 x M10x80	0,755
06273-2200X18	06273-3200X18	200	18	-	38	24	45	6	-	20,8	-	3	ø25 x M10x80	0,980
06273-2200X22	06273-3200X22	200	-	22	38	24	45	-	6	-	24,8	3	ø25 x M10x80	0,980
06273-2250X22	06273-3250X22	250	22	-	45	28	50	6	-	24,8	-	5	ø32 x M12x100	1,705
06273-2250X26	06273-3250X26	250	-	26	45	28	50	-	8	-	29,3	5	ø32 x M12x100	1,705
06273-2315X26	06273-3315X26	315	26	-	53	33	56	8	-	29,3	-	5	ø32 x M12x100	2,625
06273-2315X30	06273-3315X30	315	-	30	53	33	56	-	8	-	33,3	5	ø32 x M12x100	2,625
06273-2400X30	06273-3400X30	400	30	-	65	38	63	8	-	33,3	-	5	ø36 x M16x112	4,310
06273-2400X34	06273-3400X34	400	-	34	65	38	63	-	10	-	37,3	5	ø36 x M16x112	4,310
06273-2500X34	06273-3500X34	500	34	-	78	45	72	10	-	37,3	-	5	ø36 x M16x112	6,340
06273-2500X40	06273-3500X40	500	-	40	78	45	72	-	12	-	43,3	5	ø36 x M16x112	6,340

Aluminium Handwheels to DIN 950 with revolving machine handle

Order No. Surface finish hub without slot	Order No. Surface finish hub with slot	D1	D2 line 1	D2 line 2	D3	L1	L3	B3 line 1	B3 line 2	T line 1	T line 2	Number of spokes	revolving machine handle DIN 98 Form E	kg
06273-4080X10	06273-5080X10	80	10	-	24	16	29	3	-	11,4	-	3	ø16 x M6x54,5	0,145
06273-4080X12	06273-5080X12	80	-	12	24	16	29	-	4	-	13,8	3	ø16 x M6x54,5	0,145
06273-4100X10	06273-5100X10	100	10	-	26	17	33	3	-	11,4	-	3	ø16 x M6x54,5	0,240
06273-4100X12	06273-5100X12	100	-	12	26	17	33	-	4	-	13,8	3	ø16 x M6x54,5	0,240
06273-4125X12	06273-5125X12	125	12	-	28	18	36	4	-	13,8	-	3	ø20 x M8x67	0,340
06273-4125X14	06273-5125X14	125	-	14	28	18	36	-	5	-	16,3	3	ø20 x M8x67	0,340
06273-4140X14	06273-5140X14	140	14	-	30	19	39	5	-	16,3	-	3	ø20 x M8x67	0,440
06273-4140X16	06273-5140X16	140	-	16	30	19	39	-	5	-	18,3	3	ø20 x M8x67	0,440
06273-4160X14	06273-5160X14	160	14	-	32	20	40	5	-	16,3	-	3	ø25 x M10x83	0,610
06273-4160X16	06273-5160X16	160	-	16	32	20	40	-	5	-	18,3	3	ø25 x M10x83	0,610
06273-4180X16	06273-5180X16	180	16	-	35	22	43	5	-	18,3	-	3	ø25 x M10x83	0,755
06273-4180X18	06273-5180X18	180	-	18	35	22	43	-	6	-	20,8	3	ø25 x M10x83	0,755
06273-4200X18	06273-5200X18	200	18	-	38	24	45	6	-	20,8	-	3	ø25 x M10x83	0,980
06273-4200X22	06273-5200X22	200	-	22	38	24	45	-	6	-	24,8	3	ø25 x M10x83	0,980
06273-4250X22	06273-5250X22	250	22	-	45	28	50	6	-	24,8	-	5	ø32 x M12x105,5	1,705
06273-4250X26	06273-5250X26	250	-	26	45	28	50	-	8	-	29,3	5	ø32 x M12x105,5	1,705
06273-4315X26	06273-5315X26	315	26	-	53	33	56	8	-	29,3	-	5	ø32 x M12x105,5	2,625
06273-4315X30	06273-5315X30	315	-	30	53	33	56	-	8	-	33,3	5	ø32 x M12x105,5	2,625
06273-4400X30	06273-5400X30	400	30	-	65	38	63	8	-	33,3	-	5	ø36 x M16x117	4,310
06273-4400X34	06273-5400X34	400	-	34	65	38	63	-	10	-	37,3	5	ø36 x M16x117	4,310
06273-4500X34	06273-5500X34	500	34	-	78	45	72	10	-	37,3	-	5	ø36 x M16x117	6,340
06273-4500X40	06273-5500X40	500	-	40	78	45	72	-	12	-	43,3	5	ø36 x M16x117	6,340

Aluminium Disc Handwheels



Material:
Disc handwheel in aluminium; cylindrical grip in black duroplastic PF 31-DIN 7708, axle part in galvanized steel

Surface finish:
Wheel rim turned and polished, centre bore is concentric and parallel with outside of handle to IT 12.

Sample order:
nlm 06275-4080X10

On request:
Hubs with square socket or plastic-coated handwheels.

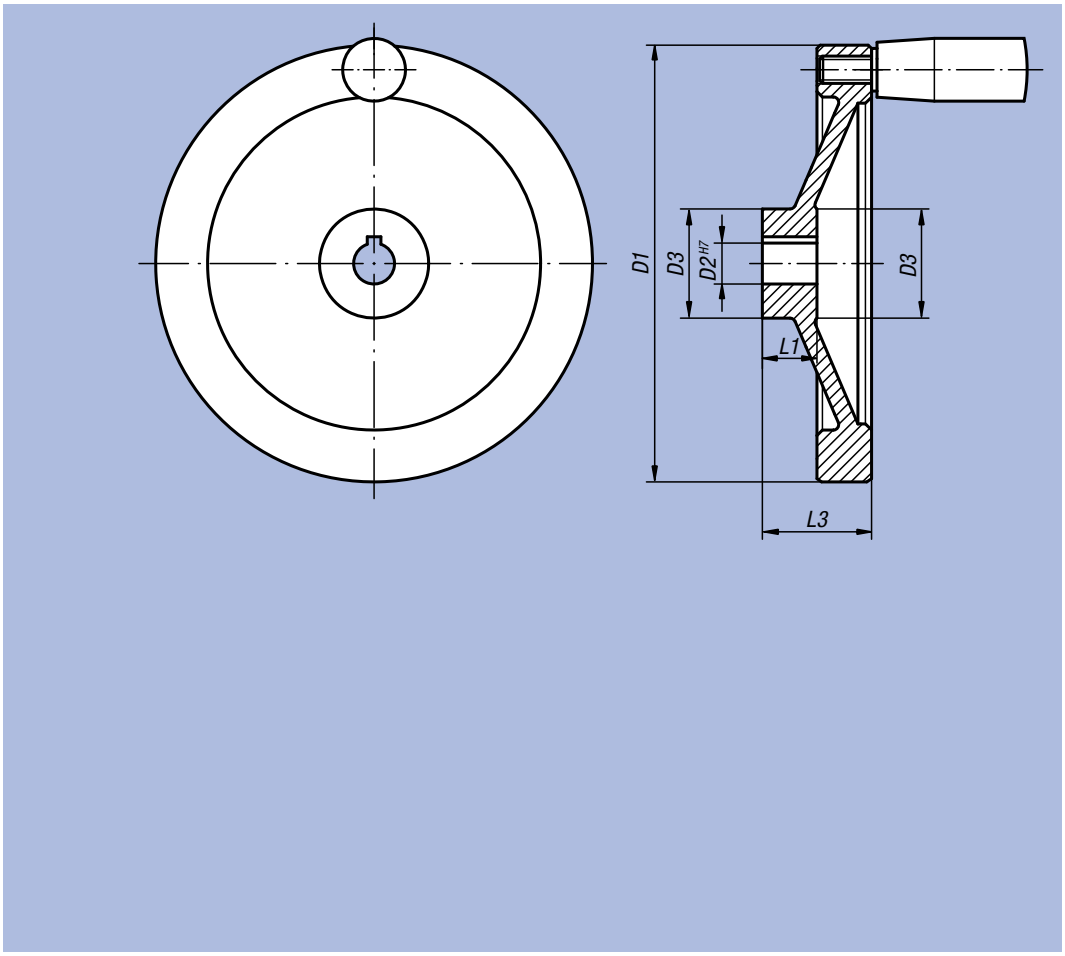

hub slot according to DIN 6885-1

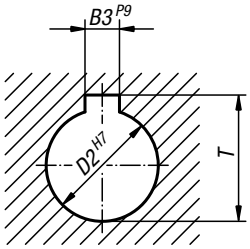

Aluminium Disc Handwheels without cylindrical grip

Order No. Surface finish hub without slot	Order No. Surface finish hub with slot	D1	D2 line 1	D2 line 2	D3	L1	L3	B3 line 1	B3 line 2	T line 1	T line 2	kg
06275-0080X10	06275-1080X10	80	10	-	25	16	31	3	-	11,4	-	0,175
06275-0080X12	06275-1080X12	80	-	12	25	16	31	-	4	-	13,8	0,175
06275-0100X10	06275-1100X10	100	10	-	31	17	34	3	-	11,4	-	0,270
06275-0100X12	06275-1100X12	100	-	12	31	17	34	-	4	-	13,8	0,270
06275-0125X12	06275-1125X12	125	12	-	30	18	37	4	-	13,8	-	0,490
06275-0125X14	06275-1125X14	125	-	14	30	18	37	-	5	-	16,3	0,490
06275-0140X14	06275-1140X14	140	14	-	34	19	34	5	-	16,3	-	0,510
06275-0140X15	06275-1140X15	140	-	15	34	19	34	-	5	-	17,3	0,510
06275-0160X15	06275-1160X15	160	15	-	40	20	40	5	-	17,3	-	0,780
06275-0160X16	06275-1160X16	160	-	16	40	20	40	-	5	-	18,3	0,780
06275-0200X18	06275-1200X18	200	18	-	50	24	46	6	-	20,8	-	1,340
06275-0200X20	06275-1200X20	200	-	20	50	24	46	-	6	-	22,8	1,340
06275-0250X22	06275-1250X22	250	22	-	50	28	49	6	-	24,8	-	1,950
06275-0250X24	06275-1250X24	250	-	24	50	28	49	-	8	-	27,3	1,950

Aluminium Disc Handwheels

Aluminium Disc Handwheels with fixed cylindrical grip

Order No. Surface finish hub without slot	Order No. Surface finish hub with slot	D1	D2 line 1	D2 line 2	D3	L1	L3	B3 line 1	B3 line 2	T line 1	T line 2	fixed cylindrical grip	kg
06275-2080X10	06275-3080X10	80	10	-	25	16	31	3	-	11,4	-	ø18 x M6x40	0,195
06275-2080X12	06275-3080X12	80	-	12	25	16	31	-	4	-	13,8	ø18 x M6x40	0,195
06275-2100X10	06275-3100X10	100	10	-	31	17	34	3	-	11,4	-	ø18 x M6x40	0,290
06275-2100X12	06275-3100X12	100	-	12	31	17	34	-	4	-	13,8	ø18 x M6x40	0,290
06275-2125X12	06275-3125X12	125	12	-	30	18	37	4	-	13,8	-	ø21 x M8x50	0,530
06275-2125X14	06275-3125X14	125	-	14	30	18	37	-	5	-	16,3	ø21 x M8x50	0,530
06275-2140X14	06275-3140X14	140	14	-	34	19	34	5	-	16,3	-	ø21 x M8x50	0,590
06275-2140X15	06275-3140X15	140	-	15	34	19	34	-	5	-	17,3	ø21 x M8x50	0,590
06275-2160X15	06275-3160X15	160	15	-	40	20	40	5	-	17,3	-	ø26 x M10x80	0,860
06275-2160X16	06275-3160X16	160	-	16	40	20	40	-	5	-	18,3	ø26 x M10x80	0,860
06275-2200X18	06275-3200X18	200	18	-	50	24	46	6	-	20,8	-	ø26 x M10x80	1,420
06275-2200X20	06275-3200X20	200	-	20	50	24	46	-	6	-	22,8	ø26 x M10x80	1,420
06275-2250X22	06275-3250X22	250	22	-	50	28	49	6	-	24,8	-	ø28 x M12x90	2,065
06275-2250X24	06275-3250X24	250	-	24	50	28	49	-	8	-	27,3	ø28 x M12x90	2,065

Aluminium Disc Handwheels with revolving cylindrical grip

Order No. Surface finish hub without slot	Order No. Surface finish hub with slot	D1	D2 line 1	D2 line 2	D3	L1	L3	B3 line 1	B3 line 2	T line 1	T line 2	revolving cylindrical grip	kg
06275-4080X10	06275-5080X10	80	10	-	25	16	31	3	-	11,4	-	ø18 x M6x40	0,205
06275-4080X12	06275-5080X12	80	-	12	25	16	31	-	4	-	13,8	ø18 x M6x40	0,205
06275-4100X10	06275-5100X10	100	10	-	31	17	34	3	-	11,4	-	ø18 x M6x40	0,300
06275-4100X12	06275-5100X12	100	-	12	31	17	34	-	4	-	13,8	ø18 x M6x40	0,300
06275-4125X12	06275-5125X12	125	12	-	30	18	37	4	-	13,8	-	ø22 x M8x56	0,540
06275-4125X14	06275-5125X14	125	-	14	30	18	37	-	5	-	16,3	ø22 x M8x56	0,540
06275-4140X14	06275-5140X14	140	14	-	34	19	34	5	-	16,3	-	ø22 x M8x56	0,620
06275-4140X15	06275-5140X15	140	-	15	34	19	34	-	5	-	17,3	ø22 x M8x56	0,620
06275-4160X15	06275-5160X15	160	15	-	40	20	40	5	-	17,3	-	ø26 x M10x80	0,890
06275-4160X16	06275-5160X16	160	-	16	40	20	40	-	5	-	18,3	ø26 x M10x80	0,890
06275-4200X18	06275-5200X18	200	18	-	50	24	46	6	-	20,8	-	ø26 x M10x80	1,450
06275-4200X20	06275-5200X20	200	-	20	50	24	46	-	6	-	22,8	ø26 x M10x80	1,450
06275-4250X22	06275-5250X22	250	22	-	50	28	49	6	-	24,8	-	ø31 x M12x102	2,125
06275-4250X24	06275-5250X24	250	-	24	50	28	49	-	8	-	27,3	ø31 x M12x102	2,125

2-Spoke Aluminium Handwheels

with straight wheel rim



Material:
Spoked handwheel in aluminium; cylindrical grip in black duroplastic PF 31-DIN 7708; axle part in galvanized steel

Surface finish:
Wheel rim turned and polished, centre bore is concentric and parallel with outside of handle to IT 12.

Sample order:
nlm 06277-4080X10

On request:
Hubs with square socket or plastic-coated handwheels available.

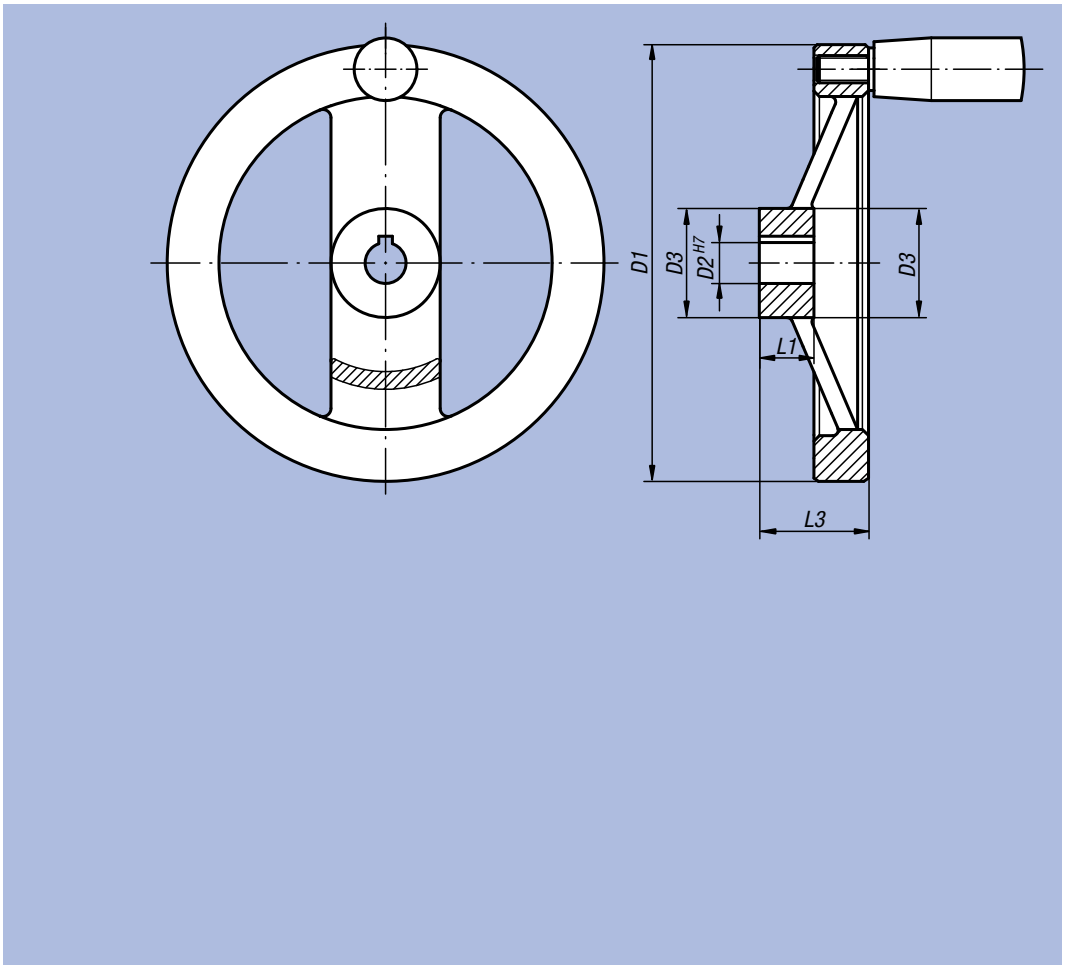

hub slot according to DIN 6885-1

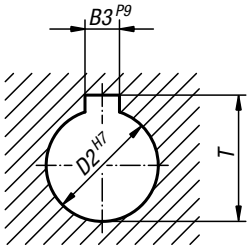

2-Spoke Aluminium Handwheels with straight wheel rim, without cylindrical grip

Order No. Surface finish hub without slot	Order No. Surface finish hub with slot	D1	D2 line 1	D2 line 2	D3	L1	L3	B3 line 1	B3 line 2	T line 1	T line 2	kg
06277-0080X10	06277-1080X10	80	10	-	24	16	28	3	-	11,4	-	0,160
06277-0080X12	06277-1080X12	80	-	12	24	16	28	-	4	-	13,8	0,160
06277-0100X10	06277-1100X10	100	10	-	26	17	33	3	-	11,4	-	0,250
06277-0100X12	06277-1100X12	100	-	12	26	17	33	-	4	-	13,8	0,250
06277-0125X12	06277-1125X12	125	12	-	31	18	33,5	4	-	13,8	-	0,380
06277-0125X14	06277-1125X14	125	-	14	31	18	33,5	-	5	-	16,3	0,380
06277-0160X14	06277-1160X14	160	14	-	36	20	39	5	-	16,3	-	0,600
06277-0160X16	06277-1160X16	160	-	16	36	20	39	-	5	-	18,3	0,600
06277-0200X18	06277-1200X18	200	18	-	42	24	45	6	-	20,8	-	1,020
06277-0200X20	06277-1200X20	200	-	20	42	24	45	-	6	-	22,8	1,020
06277-0250X22	06277-1250X22	250	22	-	48	28	51	6	-	24,8	-	1,700
06277-0250X26	06277-1250X26	250	-	26	48	28	51	-	8	-	29,3	1,700

2-Spoke Aluminium Handwheels

with straight wheel rim

2-Spoke Aluminium Handwheels with straight wheel rim, with fixed cylindrical grip

Order No. Surface finish hub without slot	Order No. Surface finish hub with slot	D1	D2 line 1	D2 line 2	D3	L1	L3	B3 line 1	B3 line 2	T line 1	T line 2	fixed cylindrical grip	kg
06277-2080X10	06277-3080X10	80	10	-	24	16	28	3	-	11,4	-	ø18 x M6x40	0,180
06277-2080X12	06277-3080X12	80	-	12	24	16	28	-	4	-	13,8	ø18 x M6x40	0,180
06277-2100X10	06277-3100X10	100	10	-	26	17	33	3	-	11,4	-	ø18 x M6x40	0,270
06277-2100X12	06277-3100X12	100	-	12	26	17	33	-	4	-	13,8	ø18 x M6x40	0,270
06277-2125X12	06277-3125X12	125	12	-	31	18	33,5	4	-	13,8	-	ø21 x M8x50	0,420
06277-2125X14	06277-3125X14	125	-	14	31	18	33,5	-	5	-	16,3	ø21 x M8x50	0,420
06277-2160X14	06277-3160X14	160	14	-	36	20	39	5	-	16,3	-	ø26 x M10x80	0,680
06277-2160X16	06277-3160X16	160	-	16	36	20	39	-	5	-	18,3	ø26 x M10x80	0,680
06277-2200X18	06277-3200X18	200	18	-	42	24	45	6	-	20,8	-	ø26 x M10x80	1,100
06277-2200X20	06277-3200X20	200	-	20	42	24	45	-	6	-	22,8	ø26 x M10x80	1,100
06277-2250X22	06277-3250X22	250	22	-	48	28	51	6	-	24,8	-	ø28 x M12x90	1,815
06277-2250X26	06277-3250X26	250	-	26	48	28	51	-	8	-	29,3	ø28 x M12x90	1,815

2-Spoke Aluminium Handwheels with straight wheel rim, with revolving cylindrical grip

Order No. Surface finish hub without slot	Order No. Surface finish hub with slot	D1	D2 line 1	D2 line 2	D3	L1	L3	B3 line 1	B3 line 2	T line 1	T line 2	revolving cylindrical grip	kg
06277-4080X10	06277-5080X10	80	10	-	24	16	28	3	-	11,4	-	ø18 x M6x40	0,190
06277-4080X12	06277-5080X12	80	-	12	24	16	28	-	4	-	13,8	ø18 x M6x40	0,190
06277-4100X10	06277-5100X10	100	10	-	26	17	33	3	-	11,4	-	ø18 x M6x40	0,280
06277-4100X12	06277-5100X12	100	-	12	26	17	33	-	4	-	13,8	ø18 x M6x40	0,280
06277-4125X12	06277-5125X12	125	12	-	31	18	33,5	4	-	13,8	-	ø22 x M8x56	0,430
06277-4125X14	06277-5125X14	125	-	14	31	18	33,5	-	5	-	16,3	ø22 x M8x56	0,430
06277-4160X14	06277-5160X14	160	14	-	36	20	39	5	-	16,3	-	ø26 x M10x80	0,710
06277-4160X16	06277-5160X16	160	-	16	36	20	39	-	5	-	18,3	ø26 x M10x80	0,710
06277-4200X18	06277-5200X18	200	18	-	42	24	45	6	-	20,8	-	ø26 x M10x80	1,130
06277-4200X20	06277-5200X20	200	-	20	42	24	45	-	6	-	22,8	ø26 x M10x80	1,130
06277-4250X22	06277-5250X22	250	22	-	48	28	51	6	-	24,8	-	ø31 x M12x102	1,875
06277-4250X26	06277-5250X26	250	-	26	48	28	51	-	8	-	29,3	ø31 x M12x102	1,875

Aluminium Disc Handwheels

similar to DIN 950



Material:
Handwheel in aluminium

Surface finish:
Wheel rim turned and polished, centre bore is concentric and parallel with outside of handle to IT 12.

Sample order:
nlm 06279-0080X10

On request:
Hubs with square socket or plastic-coated handwheels.

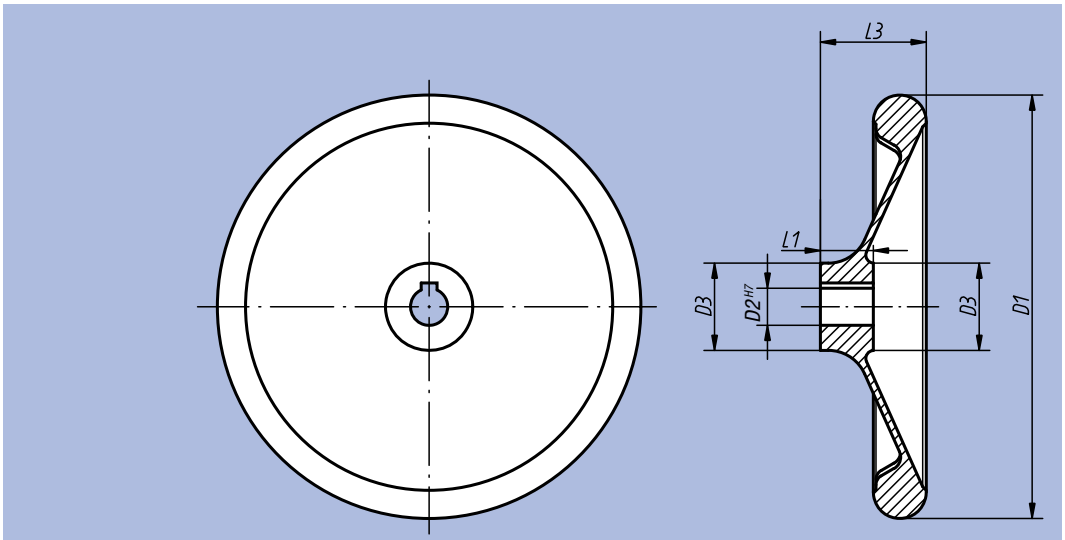

hub slot according to DIN 6885-1

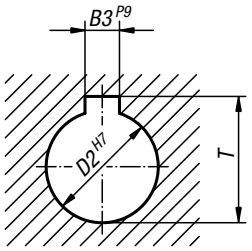

Order No. Surface finish hub without slot	Order No. Surface finish hub with slot	D1	D2 line 1	D2 line 2	D3	L1	L3	B3 line 1	B3 line 2	T line 1	T line 2	kg
06279-0080X10	06279-1080X10	80	10	-	24	16	30	3	-	11,4	-	0,150
06279-0080X12	06279-1080X12	80	-	12	24	16	30	-	4	-	13,8	0,150
06279-0100X10	06279-1100X10	100	10	-	25	17	31	3	-	11,4	-	0,220
06279-0100X12	06279-1100X12	100	-	12	25	17	31	-	4	-	13,8	0,220
06279-0120X12	06279-1120X12	120	12	-	26	18	30	4	-	13,8	-	0,250
06279-0120X14	06279-1120X14	120	-	14	26	18	30	-	5	-	16,3	0,250
06279-0160X14	06279-1160X14	160	14	-	33	20	40	5	-	16,3	-	0,660
06279-0160X16	06279-1160X16	160	-	16	33	20	40	-	5	-	18,3	0,660
06279-0200X18	06279-1200X18	200	18	-	39	24	44	6	-	20,8	-	1,100
06279-0200X22	06279-1200X22	200	-	22	39	24	44	-	6	-	24,8	1,100
06279-0250X22	06279-1250X22	250	22	-	48	28	61	6	-	24,8	-	2,000
06279-0250X26	06279-1250X26	250	-	26	48	28	61	-	8	-	29,3	2,000
06279-0280X24	06279-1280X24	280	24	-	49	30	38	8	-	27,3	-	2,300
06279-0280X28	06279-1280X28	280	-	28	49	30	38	-	8	-	31,3	2,300
06279-0360X28	06279-1360X28	360	28	-	63	35	73	8	-	31,3	-	4,500
06279-0360X32	06279-1360X32	360	-	32	63	35	73	-	10	-	35,3	4,500

Disc Handwheels

with revolving taper grip



Material:
Black duroplastic PF 31;
hubs in steel, nickel-plated or stainless steel 1.4305, natural finish;
grip revolving, steel parts nickel-plated or in stainless steel 1.4305, natural finish.

Surface finish:
Deburred and high-polish finish.

Sample order:
nlm 06287-0125X08

Note:
The Handwheel and grip will be delivered unassembled.

On request:
Other locating holes.

Form D
predrilled

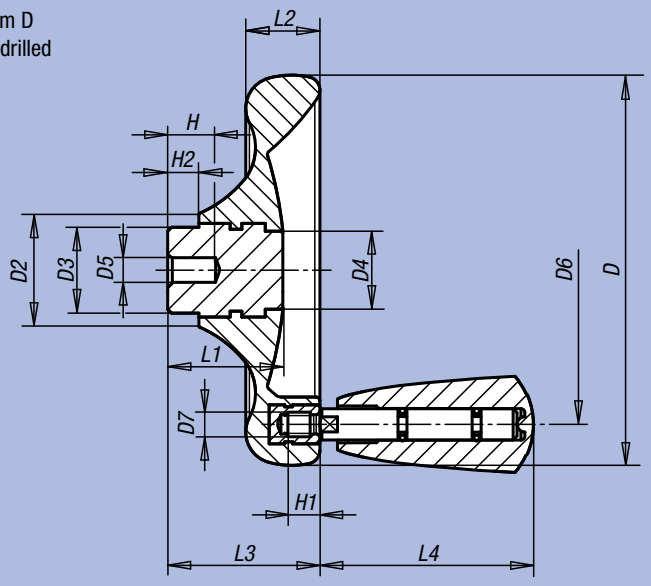

Form E
with locating hole

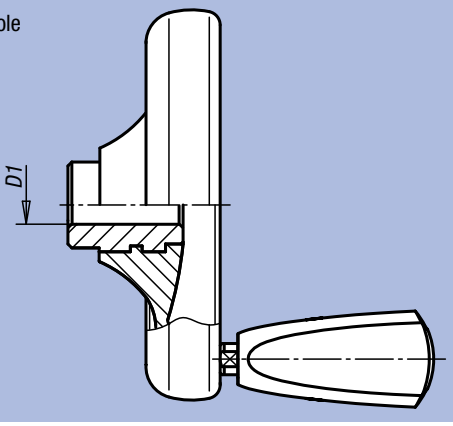

Disc Handwheels with revolving taper grip

Order No. Form D	Order No. Form E	Size	D	D1	D2	D3	D4	D5	D6	D7	H	H1	H2	L1	L2	L3	L4
06287-0100X06	06287-1100X10	1	100	10 H8	29	22	20	6	79	M6	12	9	8	29,5	19	39	54,7
06287-0125X08	06287-1125X12	2	125	12 H8	34	26	21	8	101	M6	15	9	8	34	24	46	54,7
06287-0140X08	06287-1140X14	3	140	14 H8	39	30	25	8	110	M8	16	12	8	38,5	27	52	82,2
06287-0160X10	06287-1160X16	4	160	16 H8	43	33	30	10	128	M8	20	12	8	41,3	30,1	57	82,2
-	06287-1160X18	4	160	18 H8	43	33	30	-	128	M8	-	12	8	41,3	30,1	57	82,2

Disc Handwheels with revolving taper grip, steel parts in stainless steel

Order No. Form D	Order No. Form E	Size	D	D1	D2	D3	D4	D5	D6	D7	H	H1	H2	L1	L2	L3	L4
06287-2100X06	06287-3100X10	1	100	10 H7	29	22	20	6	79	M6	12	9	8	29,5	19	39	54,7
06287-2125X08	06287-3125X12	2	125	12 H7	34	26	21	8	101	M6	15	9	8	34	24	46	54,7
06287-2140X08	06287-3140X14	3	140	14 H7	39	30	25	8	110	M8	16	12	8	38,5	27	52	82,2
06287-2160X10	06287-3160X16	4	160	16 H7	43	33	30	10	128	M8	20	12	8	41,3	30,1	57	82,2
-	06287-3160X18	4	160	18 H7	43	33	30	-	128	M8	-	12	8	41,3	30,1	57	82,2

Disc Handwheels

without taper grip



Material:
Black duroplastic PF 31;
hub in steel, nickel-plated or stainless steel 1.4305, natural finish

Surface finish:
Deburred and high-polish finish

Sample order:
nlm 06288-0100X06

On request:
Other locating holes.

Form D
predrilled

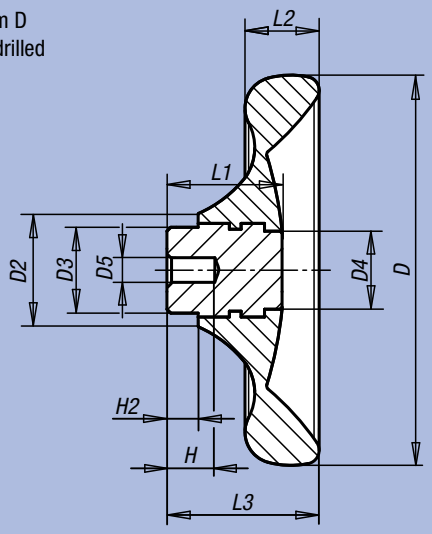

Form E
with locating hole

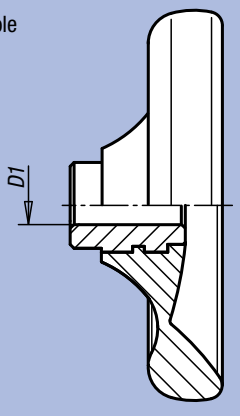

Disc Handwheels without taper grip, bush in steel

Order No. Form D	Order No. Form E	Size	D	D1	D2	D3	D4	D5	H	H2	L1	L2	L3
06288-0100X06	06288-1100X10	1	100	10 H8	29	22	20	6	12	8	29,5	19	39
06288-0125X08	06288-1125X12	2	125	12 H8	34	26	21	8	15	8	34	24	46
06288-0140X08	06288-1140X14	3	140	14 H8	39	30	25	8	16	8	38,5	27	52
06288-0160X10	06288-1160X16	4	160	16 H8	43	33	30	10	20	8	41,3	30,1	57
-	06288-1160X18	4	160	18 H8	43	33	30	-	-	8	41,3	30,1	57

Disc Handwheels without taper grip, bush in stainless steel

Order No. Form D	Order No. Form E	Size	D	D1	D2	D3	D4	D5	H	H2	L1	L2	L3
06288-2100X06	06288-3100X10	1	100	10 H7	29	22	20	6	12	8	29,5	19	39
06288-2125X08	06288-3125X12	2	125	12 H7	34	26	21	8	15	8	34	24	46
06288-2140X08	06288-3140X14	3	140	14 H7	39	30	25	8	16	8	38,5	27	52
06288-2160X10	06288-3160X16	4	160	16 H7	43	33	30	10	20	8	41,3	30,1	57
-	06288-3160X18	4	160	18 H7	43	33	30	-	-	8	41,3	30,1	57

Fixed Handles

similar to DIN 39, in steel



Material:
Steel
Surface finish:
Polished
Sample order:
nlm 06290-216

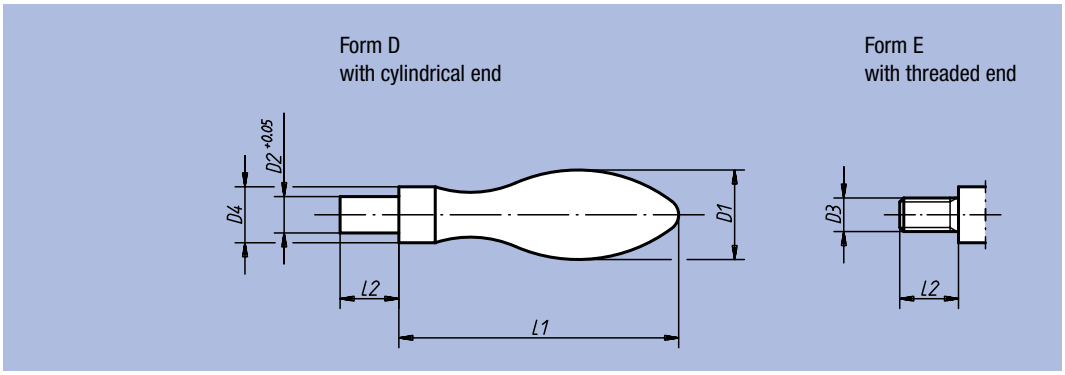

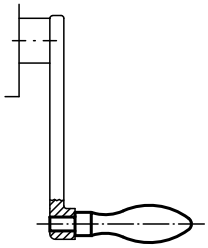

Order No. Form D	Order No. Form E	D1	D2	D3	D4	L1	L2	kg
06290-113	06290-213	13	5	M5	8	40	10	0,025
06290-116	06290-216	16	6	M6	10	50	13	0,040
06290-120	06290-220	20	8	M8	13	64	15	0,090
06290-125	06290-225	25	10	M10	16	80	18	0,175
06290-132	06290-232	32	12	M12	20	100	20	0,355

Fixed Machine Handles

to DIN 39 Form E

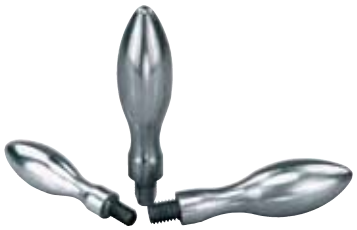

Material:
Machine handle in steel or aluminium; axle part steel
Surface finish:
Machine handle polished, axle part black oxide finish
Sample order:
nlm 06291-0616050
Note:
Machine Handle suitable for Handwheels to DIN 950.

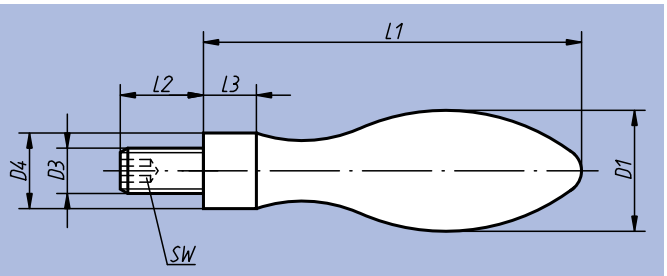

Order No. Surface finish machine handle in steel	Order No. Surface finish machine handle in aluminium	D1	D3	D4	L1	L2	L3	SW
06291-0616050	06292-0616050	16	M6	10	50	11	7	3
06291-0820064	06292-0820064	20	M8	13	64	13	8	4
06291-1025080	06292-1025080	25	M10	16	80	14	10	5
06291-1232100	06292-1232100	32	M12	20	100	21	13	6
06291-1636112	06292-1636112	36	M16	22	112	26	14	8

Revolving Machine Handles

to DIN 98 Form E



Material:
Machine handle in steel
or aluminium; axle part steel
Surface finish:
Machine handle polished; axle part
galvanized and blue chromated
Sample order:
nlm 06308-0616055
Note:
Machine Handle suitable for
Handwheels to DIN 950.

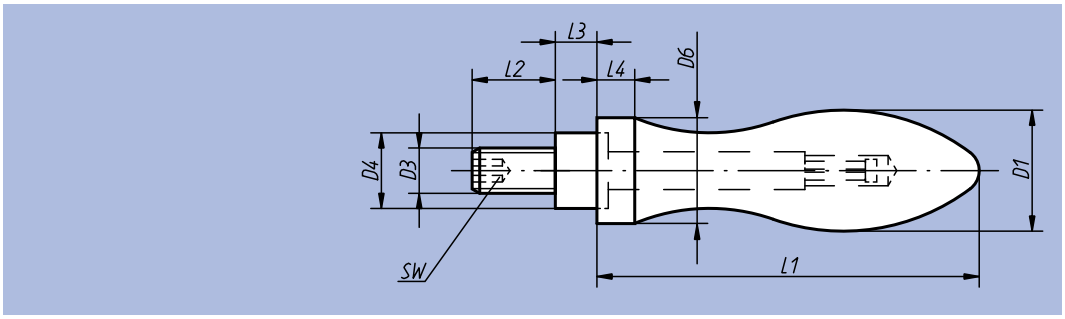

Order No. Surface finish machine handle in steel	Order No. Surface finish machine handle in aluminium	D1	D3	D4	D6	L1	L2	L3	L4	SW
06308-0616055	06309-0616055	16	M6	10	14	49	11	5,5	5	3
06308-0820067	06309-0820067	20	M8	13	18	61	13	6	6	4
06308-1025083	06309-1025083	25	M10	16	21	75	14	8	6,5	5
06308-1232105	06309-1232105	32	M12	20	26	95	21	10,5	8	6
06308-1636117	06309-1636117	36	M16	22	29	106	26	11	9	8

Revolving Handles

similar to DIN 98, in steel



Material:
Steel
Surface finish:
Polished
Sample order:
nlm 06310-225

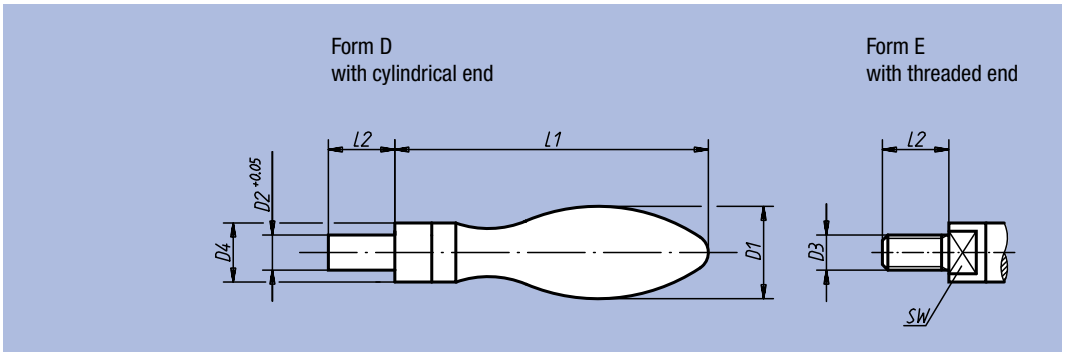

Order No. Form D	Order No. Form E	D1	D2	D3	D4	L1	L2	SW	kg
06310-116	06310-216	16	6	M6	10	53	13	8	0,050
06310-120	06310-220	20	8	M8	13	66	15	10	0,100
06310-125	06310-225	25	10	M10	16	85	18	13	0,190
06310-132	06310-232	32	12	M12	20	107	20	17	0,380

Fixed Handles in aluminium

similar to DIN 39



Material:
Light metal casting;
threaded bolt in steel.
Surface finish:
Polished handle, glossy finish;
threaded bolt moulded into the handle
Sample order:
nlm 06311-20

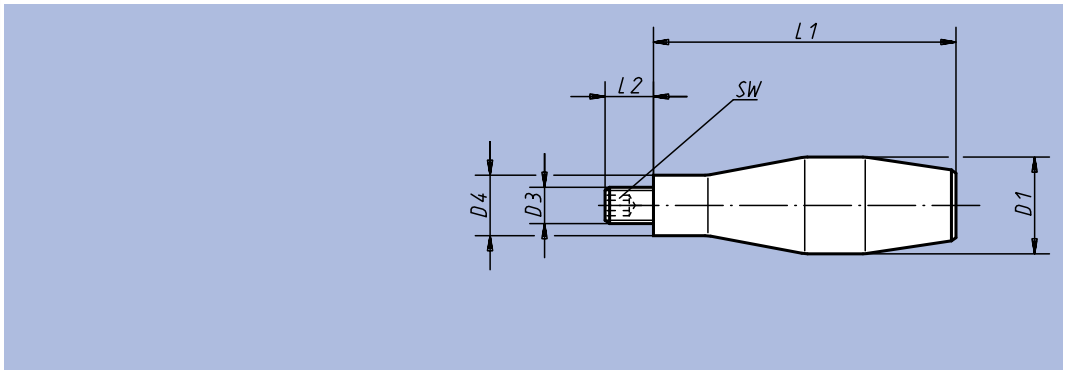

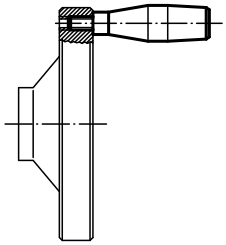

Order No.	D1	D3	D4	L1	L2	SW	kg
06311-16	16	M6	10	52	11	3	0,024
06311-20	20	M8	13	66	13	4	0,050
06311-25	25	M10	16	80	14	5	0,096
06311-29	32	M12	20	100	16	6	0,142

Revolving Handles in aluminium

similar to DIN 98



Material:
Light metal casting;
axle part in steel
Surface finish:
Polished handle, glossy finish.
Sample order:
nlm 06312-24

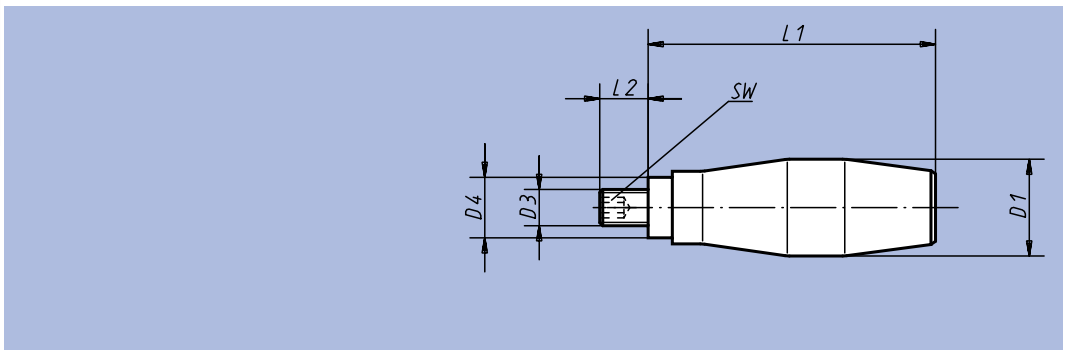

Order No.	D1	D3	D4	L1	L2	SW	kg
06312-20	20	M8	13	64	13	4	0,068
06312-24	24	M10	16	75	13	5	0,105
06312-31	31	M12	20	95	16	6	0,205

Rotating machine handle



Material, Surface finish:
Thermoplast or Duroplast black;
axle part chromated

Sample order:
nlm 06313-208

Note:
Duroplastic handles for
M6 and M8 sizes.
Thermoplastic handles for
M10 and M12.

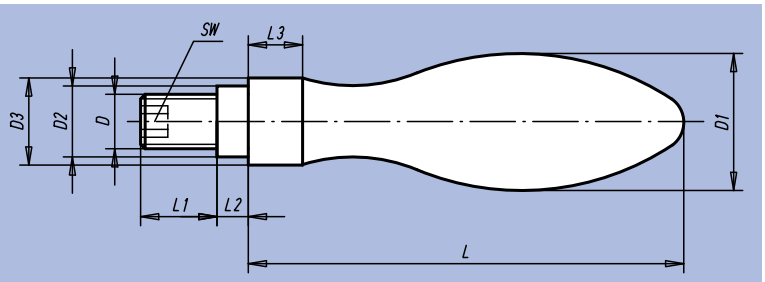

Order No.	D	D1	D2	D3	~L	L1	L2	L3	SW	kg
06313-206	M6	16	10	14	49	11	5,5	5	3	0,022
06313-208	M8	20	13	18	61	13	6	6	4	0,045
06313-210	M10	25	16	21	75	14	8	6,5	5	0,075
06313-212	M12	32	20	26	95	21	10,5	8	6	0,160

Revolving Handles



Material:
Black duroplastic PF 31;
axle part in steel

Surface finish:
Axle part galvanized

Sample order:
nlm 06314-18

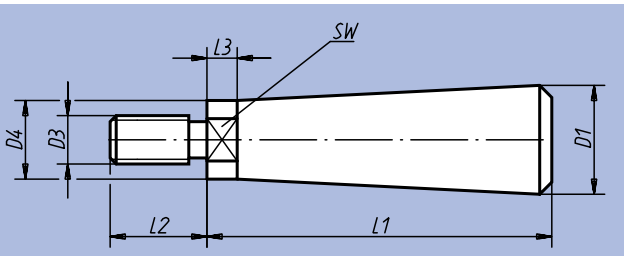

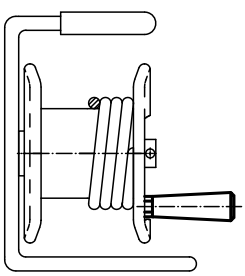

Order No.	D1	D3	D4	L1	L2	L3	SW	kg
06314-18	18	M8	13	57	16	5	11	0,034
06314-23	23	M10	16	69	20	5	13	0,067

Revolving Taper Grips



Material:
Black duroplastic PF 31;
axle and threaded bush in galvanized steel or in stainless steel, natural finish.

Surface finish:
Deburred and high-polish finish

Sample order:
nlm 06316-105007

Note:
In order to assemble, unscrew the axle.

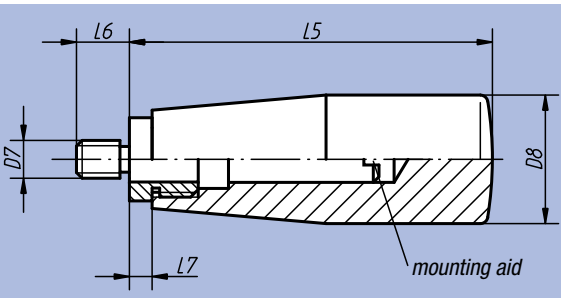

Order No. Surface finish axle in steel	Order No. Surface finish axle in stainless steel	Size	D7	D8	D9	L5	L6	L7	SW
06316-105007	06316-1105007	1	M5	17	15	51	7	5	13
06316-206008	06316-1206008	2	M6	23	18	68	8	6	16
06316-208009	06316-1208009	2	M8	23	18	68	9	6	16
06316-310011	06316-1310011	3	M10	28	21	77	11	7	19

nlm 06316

Revolving Taper Grips



Material:
Black duroplastic PF 31; axle steel, nickel-plated or stainless steel 1.4305, natural finish; snap ring in stainless steel 1.4310.

Surface finish:
Deburred and high-polish finish

Sample order:
nlm 06316-106009

Note:
The grips are suitable for Disc Handwheels with revolving taper grip 06287.

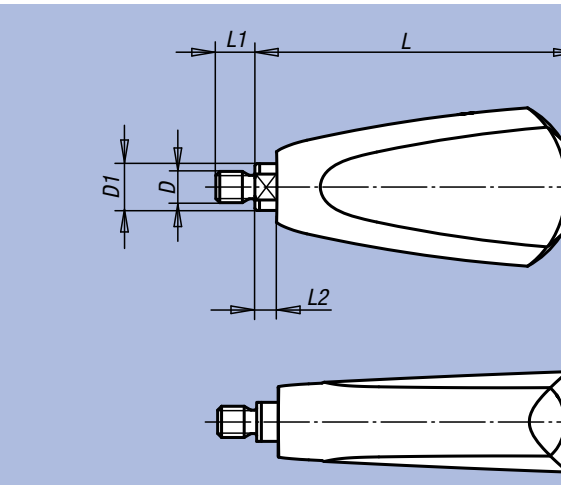

Order No. Surface finish axle in steel	Order No. Surface finish axle in stainless Ste el	Size	D	D1	D2	D3	L	L1	L2	SW
06316-106009	06316-1106009	1	M6	8	25	18	54,7	9	4,5	7
06316-208010	06316-1208010	2	M8	12	41	26	82,2	10	5,5	10

Taper Grips



Material:
Black duroplastic PF 31;
bush and threaded bolt in galvanized steel

Surface finish:
Deburred and high-polish finish

Sample order:
nlm 06320-106

Note:
The versions 06320-205 and 06320-206 have a bush in copper-plated steel.
The versions 06320-208 and 06320-2081 have a bush in brass.

On request:
Other colours.

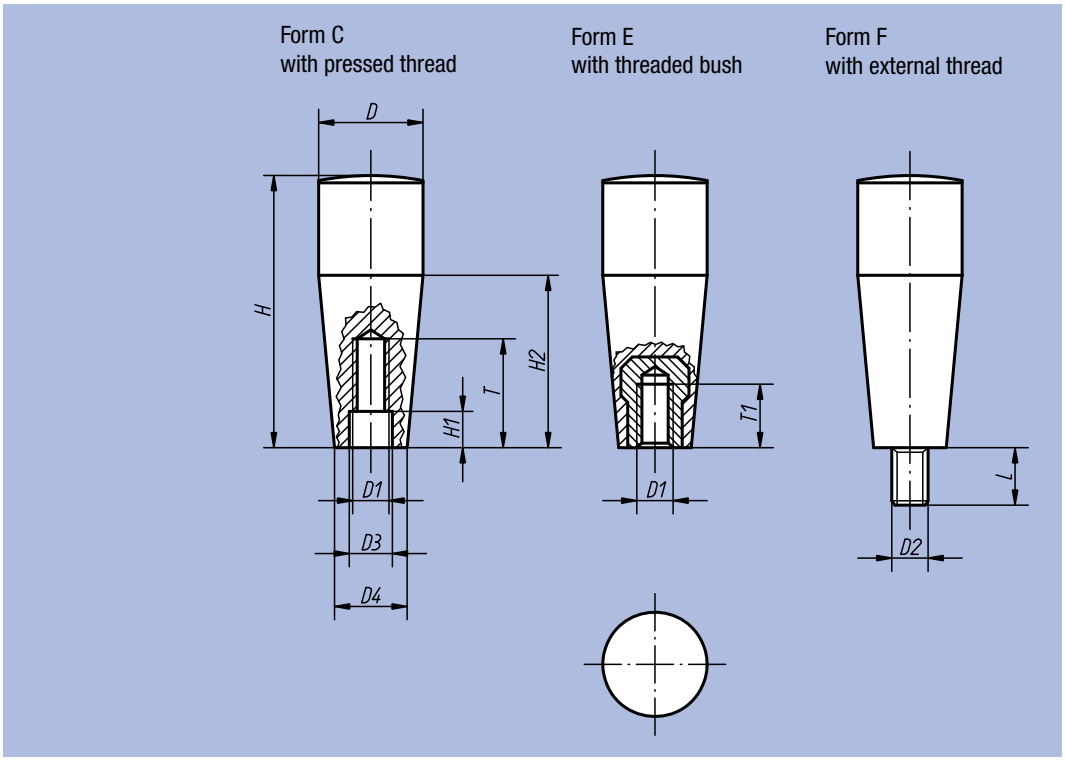

Taper Grips with internal thread

Order No.	Form	D	D1	D3	D4	H	H1	H2	T	T1
06320-106	C	17	M6	6,2	15	45	2	26	14	-
06320-108	C	17	M8	8,2	13	45	2	26	16	-
06320-1081	C	23	M8	8,5	18	60	8	38	24	-
06320-110	C	29	M10	10,5	21	70	10	42	28	-
06320-205	E	17	M5	-	15	45	-	26	-	10
06320-206	E	17	M6	-	15	45	-	26	-	9
06320-208	E	23	M8	-	18	60	-	38	-	14
06320-2081	E	28	M8	-	21	70	-	42	-	14

Taper Grips with external thread

Order No.	Form	D	D2	D4	H	H2	L
06320-306	F	17	M6	15	45	26	18
06320-308	F	23	M8	18	60	38	12
06320-310	F	29	M10	21	70	42	20

Cylindrical Grips



Material, Surface finish:
Anthracite grey thermoplastic;
steel parts black oxide finish

Sample order:
nlm 06326-104

Note:
Cylindrical Grips are supplied assembled and can be screwed to handwheels, spools and cranks. Borehole D3 is used as a positioning hole.

Cylindrical Fold-Away Grip

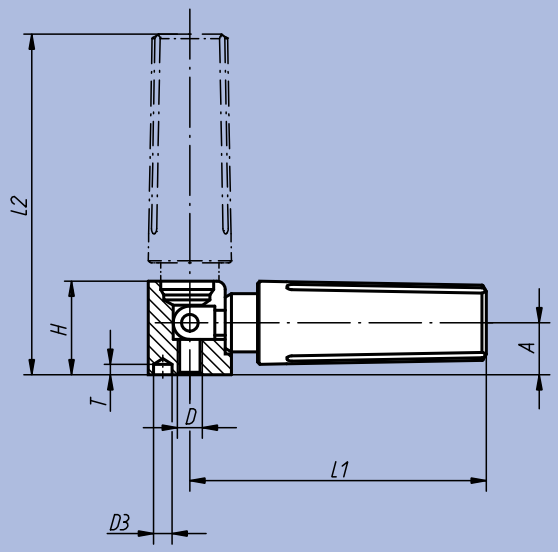

Cylindrical Revolving Grip

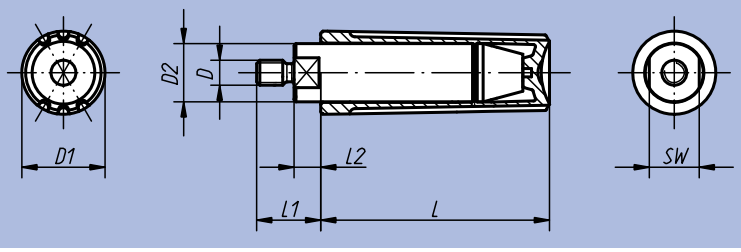

Cylindrical Revolving Grip

Order No.	Size	D	D1	D2	L	L1	L2	SW	kg
06325-104	1	M4	13	9	35	11	5	8	0,013
06325-205	2	M5	16	11	44	13	5,5	10	0,025
06325-306	3	M6	20	14	55	14	5	12	0,050
06325-408	4	M8	25	18	70,5	25	13	15	0,103

Cylindrical Fold-Away Grip

Order No.	Size	D	D1	D2	D3	A	A1	H	L	L1	L2	T	kg
06326-104	1	M4	13	13	2,5	8	4,3	14,5	35	47	54,5	4,5	0,028
06326-205	2	M5	16	16	3,5	10	5,3	18	44	58	67	4,5	0,051
06326-306	3	M6	20	20	4,5	12,5	6,5	22,5	55	71,5	82	6	0,101
06326-408	4	M8	25	26	5,5	16	9	29	70,5	98,5	112,5	6,5	0,225

Cylindrical Safety Grips

automatically returning



Material, Surface finish:
Grip anthracite grey thermoplastic; steel parts black oxide finish

Sample order:
nlm 06328-104

Note:
Two steps have to be executed to bring the Cylindrical Safety Grip into operating position:
- Swivel the grip around the axis of rotation until it stops (90°).
- Press the grip in axial direction into locking position.

The pressed-in position is the most comfortable position to crank. The grip returns automatically after letting go. Cylindrical Safety Grips are supplied assembled and can be screwed to handwheels, spools and cranks. Borehole D3 is used as a positioning hole.

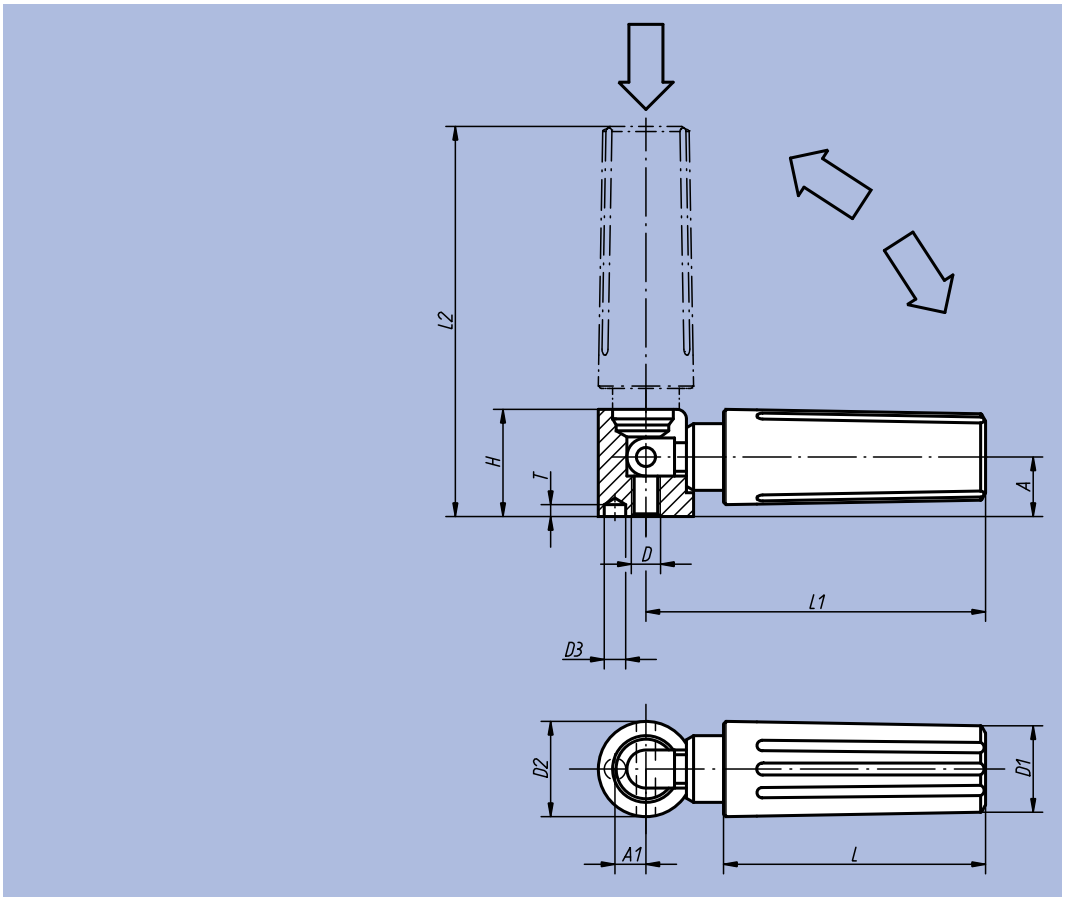

Order No.	Size	D	D1	D2	D3	A	A1	H	L	L1	L2	T	kg
06328-104	1	M4	13	13	2,5	8	4,3	14,5	35	47	52,5	4,5	0,028
06328-205	2	M5	16	16	3,5	10	5,3	18	44	58	65,5	4,5	0,051
06328-306	3	M6	20	20	4,5	12,5	6,5	22,5	55	71,5	81	6	0,101
06328-408	4	M8	25	26	5,5	16	9	29	70,5	98,5	111	6,5	0,225

Tension Levers 20°

to DIN 99



Material:
Steel
Surface finish:
Polished
Sample order:
nlm 06330-212
Note:
To fix the lever to another element, gluing is more cost-effective than pinning.

Form L
with borehole

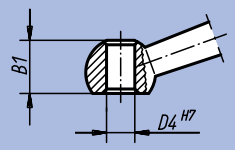

Form N
with internal thread

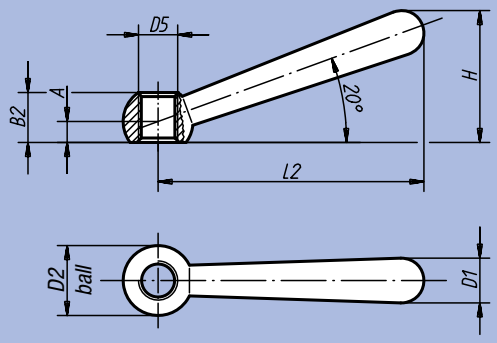

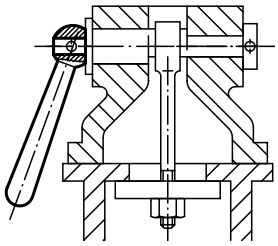

Order No. Form L	Order No. Form N	D4	D5	A	B1	B2	D1	D2 Ball	L2	H	kg
06330-106	06330-206	6	M6	4	9,5	9,5	8	12	48	24	0,018
06330-108	06330-208	8	M8	5	12	12	10	16	60	30,5	0,035
06330-110	06330-210	10	M10	6	14,5	14,5	13	20	76	38	0,076
06330-112	06330-212	12	M12	7,5	18,5	18,5	16	25	95	47	0,142
06330-116	06330-216	16	M16	10	24	24	20	32	119	59,5	0,285
06330-120	06330-220	20	M20	12,5	30	30	25	40	152	75,5	0,577

Notes:

Control Handles



Material:
Steel parts quality class 5.8;
black plastic ball knob

Surface finish:
Black oxide finish

Sample order:
nlm 06340-208

Note:
Control Handles can be used for simple clamping applications and switching operations.
Generally there must be enough space so that the handle can be turned 360°.

On request:
Other internal threads and locating holes and special versions.
Dimension „A“ available in other lengths at extra charge.

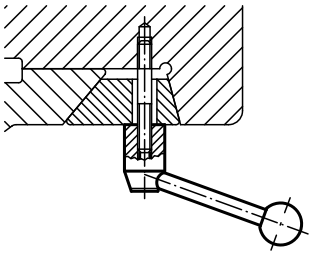

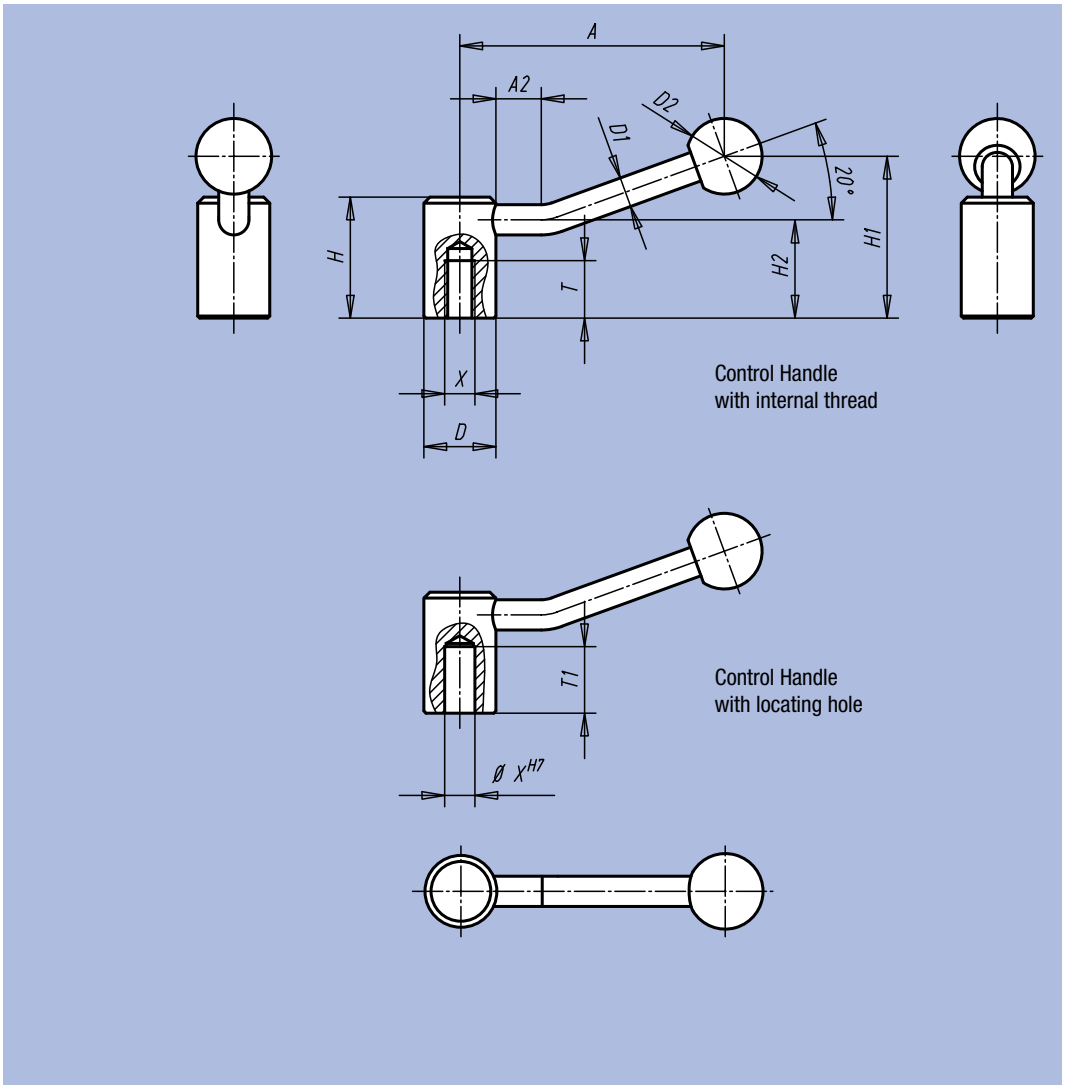

Order No.	Surface finish	Size	X	T	T1	D	D1	D2	H	H1	H2	A	A2	kg
06340-208	internal thread	1	M8	18	-	24	10	25	40	52,5	32,5	84,5	15	0,170
06340-210	internal thread	1	M10	19	-	24	10	25	40	52,5	32,5	84,5	15	0,170
06340-212	internal thread	2	M12	20	-	28	12	32	46	61	36,5	100	15	0,260
06340-216	internal thread	3	M16	23	-	33	13	32	52	72	41	121	15	0,380
06340-220	internal thread	4	M20	26	-	41	13	32	61	80	49	123	15	0,660
06340-108	locating hole	1	8	-	22	24	10	25	40	52,5	32,5	84,5	15	0,170
06340-110	locating hole	1	10	-	22	24	10	25	40	52,5	32,5	84,5	15	0,170
06340-112	locating hole	2	12	-	25	28	12	32	46	61	36,5	100	15	0,260
06340-114	locating hole	2	14	-	25	28	12	32	46	61	36,5	100	15	0,260
06340-116	locating hole	3	16	-	28	33	13	32	52	72	41	121	15	0,380
06340-118	locating hole	3	18	-	28	33	13	32	52	72	41	121	15	0,380
06340-120	locating hole	4	20	-	32	41	13	32	61	80	49	123	15	0,660

Flat Control Handles



Material:
Steel parts quality class 5.8;
black ball knob in duroplastic PF 31

Surface finish:
Black oxide finish

Sample order:
nlm 06342-206

Note:
Flat Control Handles can be used for simple clamping applications and switching operations.
Generally there must be enough space so that the handle can be turned 360°.
The version with star socket is designed to allow turning in steps of 45°.

On request:
Other internal threads, locating holes and star sockets.
Dimension „A“ available in other lengths at extra charge.

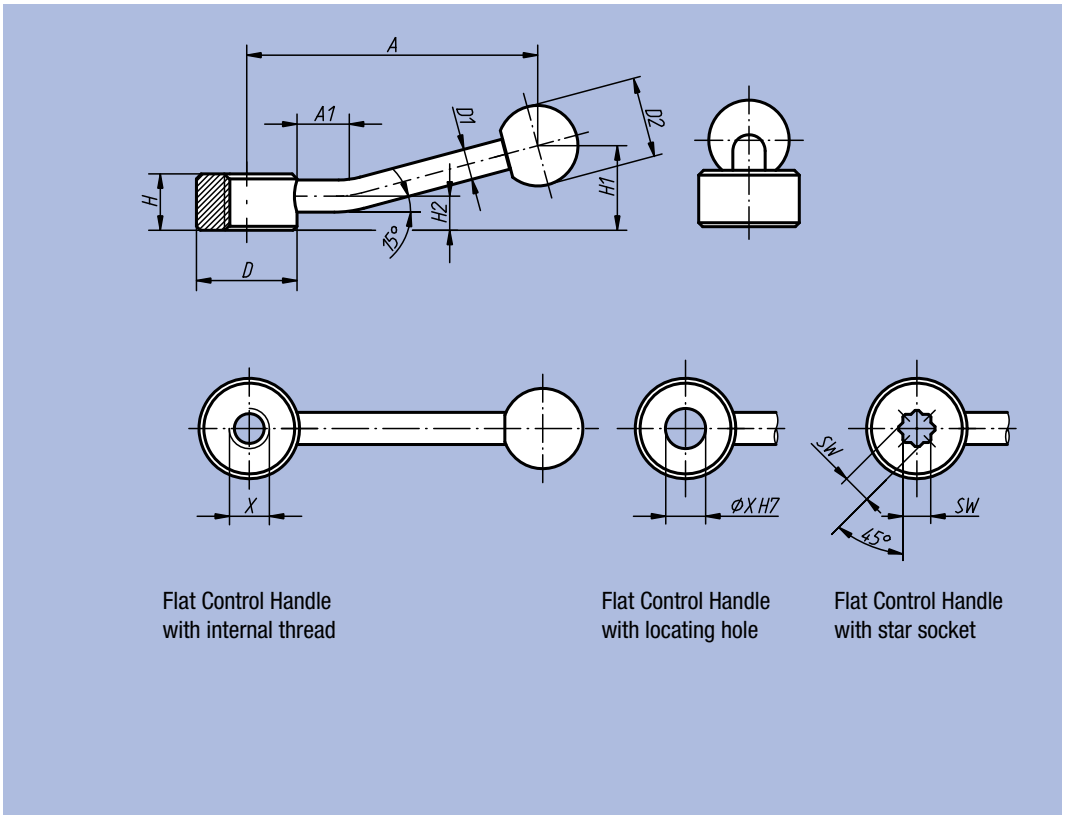

Flat Control Handle with internal thread

Flat Control Handle with locating hole

Flat Control Handle with star socket

Order No.	Surface finish	Size	X	D	D1	D2	H	H1	H2	A	A1	g
06342-206	internal thread	1	M6	25	8	20	14	22	8,5	75	15	81
06342-208	internal thread	1	M8	25	8	20	14	22	8,5	75	15	78
06342-210	internal thread	1	M10	25	8	20	14	22	8,5	75	15	76
06342-212	internal thread	2	M12	33	10	25	17	27	10	100	15	156
06342-216	internal thread	2	M16	33	10	25	17	27	10	100	15	144
06342-220	internal thread	3	M20	41	12	30	20	36	11,5	128	15	258
06342-224	internal thread	3	M24	41	12	30	20	36	11,5	128	15	246

Order No.	Surface finish	Size	X	D	D1	D2	H	H1	H2	A	A1	g
06342-106	locating hole	1	6	25	8	20	14	22	8,5	75	15	80
06342-108	locating hole	1	8	25	8	20	14	22	8,5	75	15	78
06342-110	locating hole	1	10	25	8	20	14	22	8,5	75	15	75
06342-112	locating hole	2	12	33	10	25	17	27	10	100	15	152
06342-116	locating hole	2	16	33	10	25	17	27	10	100	15	140
06342-120	locating hole	3	20	41	12	30	20	36	11,5	128	15	248
06342-124	locating hole	3	24	41	12	30	20	36	11,5	128	15	238

Order No.	Surface finish	Size	SW	D	D1	D2	H	H1	H2	A	A1	g
06342-305	star socket	1	5,5	25	8	20	14	22	8,5	75	15	79
06342-307	star socket	1	7	25	8	20	14	22	8,5	75	15	77
06342-309	star socket	2	9	33	10	25	17	27	10	100	15	154
06342-311	star socket	2	11	33	10	25	17	27	10	100	15	149
06342-314	star socket	3	14	41	12	30	20	36	11,5	128	15	273
06342-319	star socket	3	19	41	12	30	20	36	11,5	128	15	245

Locking Bars



Material, Surface finish:
Stainless steel 1.4308, natural finish or steel, black-oxide finish

Sample order:
nlm 06349-1040

Note:
The Locking Bar can be used individually. Its styled design with the easy recessed grip gives the fingers purchase and meets the demands of modern requirements. Large clamping forces can be easily transferred. Different types of attachment can be selected due to the lateral centring.

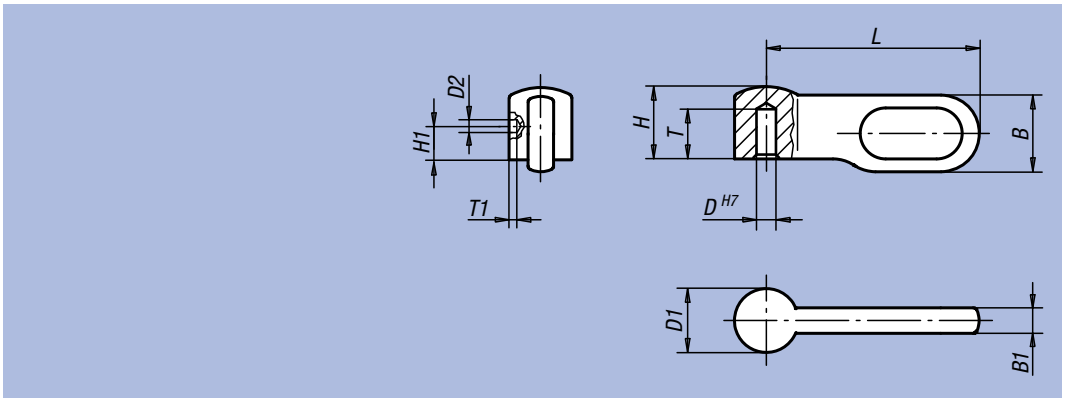

Order No.	Surface finish	Size	B	B1	D	D1	D2	H	H1	L	T	T1
06349-1040	stainless steel	1	9	3	4	7,5	1,5	8,5	3	25	5,5	0,5
06349-2050	stainless steel	2	10,8	3,6	5	9	2	10,2	4	30	6,5	1
06349-3060	stainless steel	3	14,4	4,8	6	12	2	13,6	5	40	8,7	1
06349-4080	stainless steel	4	18	6	8	15	3	17	6	50	10,2	1
06349-1041	steel	1	9	3	4	7,5	1,5	8,5	3	25	5,5	0,5
06349-2051	steel	2	10,8	3,6	5	9	2	10,2	4	30	6,5	1
06349-3061	steel	3	14,4	4,8	6	12	2	13,6	5	40	8,7	1
06349-4081	steel	4	18	6	8	15	3	17	6	50	10,2	1

Notes:

Tension Levers



Material:
GJMW 400 malleable cast iron
Surface finish:
Natural finish tumbled
Sample order:
nlm 06350-16

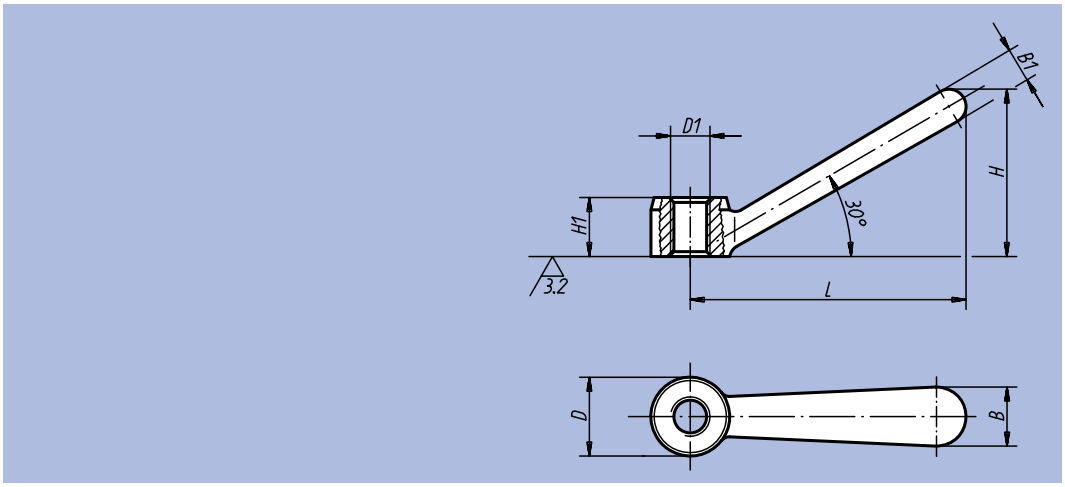

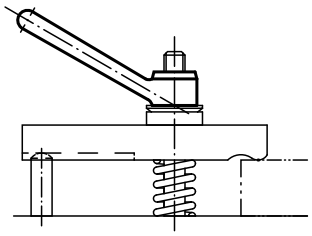

Order No.	D	D1	B	B1	H	H1	L	kg
06350-08	16	M8	12	7	34	12	56	0,037
06350-10	20	M10	14	9	42,5	14	70	0,068
06350-12	25	M12	18	11	53	18	87	0,128
06350-16	32	M16	22	15	66,5	24	109	0,271
06350-20	40	M20	28	18	84,5	28	140	0,551

Revolving Handles short version



Material, Surface finish:
Ball in Duroplast PF 31, black shiny finish;
steel bolts, blue chromed
Sample order:
nlm 06353-061

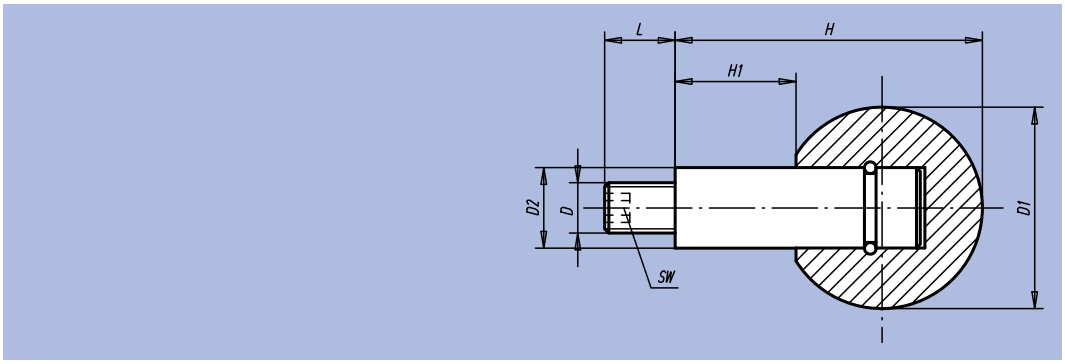

Order No.	D	D1	D2	H	H1	L	SW	kg
06353-061	M6	25	10	37,5	15	11	3	0,035
06353-081	M8	32	13	48	19	13	4	0,070
06353-101	M10	40	16	61	24	14	5	0,125
06353-121	M12	50	20	78	31	21	6	0,215

Screw-in Handles



Material, Surface finish:
Handle in tempered steel,
black oxide finish;
ball knob in black duroplastic PF 31.

Sample order:
nlm 06355-05059

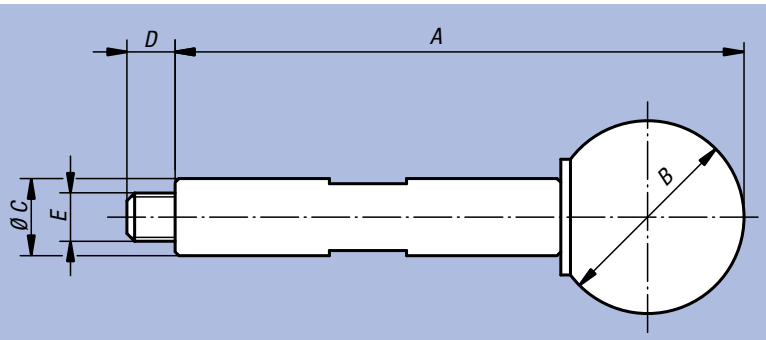

Order No.	A	B	C	D	E	kg
06355-05059	59	20	8	5	M5	0,030
06355-06089	89	25	10	6	M6	0,060

Notes:

Screw-in Handles

with adjustable torque



Material:
Tempered steel

Surface finish:
Hardened and black oxide finish

Sample order:
nlm 06357-05090

Note:
Changing the position of the grub screw with hexagon socket allows adjusting the disengagement torque to set a desired clamping force. The clamping force is reached when the handle folds approximately 15°.

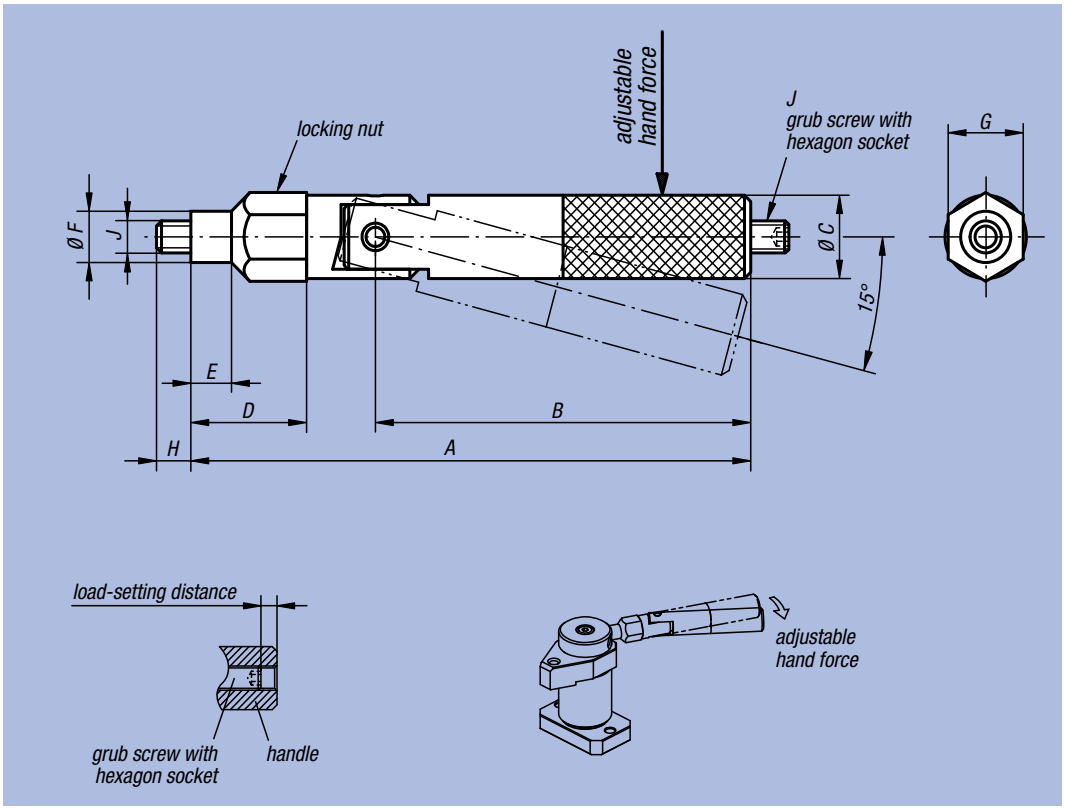

Order No.	A	B	C	D	E	F	G	H	J	K	Hand force N	kg
06357-05090	89,5	60	13	18,5	6,5	8	12	5,5	M5	M5x16	0-150	0,090
06357-06119	119	84	15	23	8	10	14	6,5	M6	M6x20	0-200	0,140

Handles



Material, Surface finish:
Duroplastic PF 31 Knobs, black, deburred with high-polish finish; steel Rod 1.0718, black oxide finish or stainless steel 1.4305, natural finish

Sample order:
nlm 06360-208X35
(please also indicate dimension L)

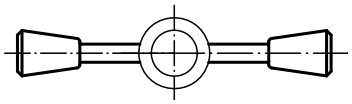

Form A

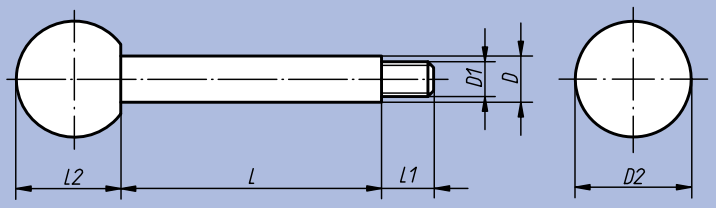

Form C

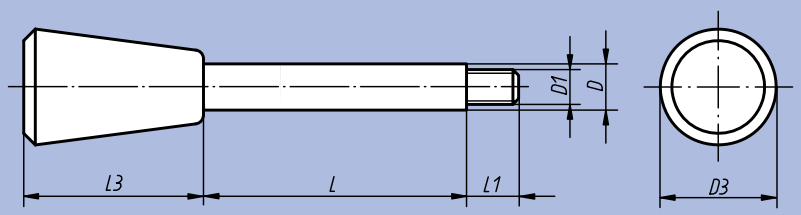

Form E

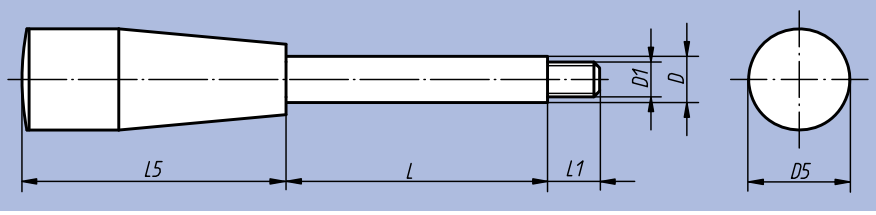

Order No.	Surface finish	Form	D	D1	D2	D3	D5	L	L1	L2	L3	L5
06360-208X	steel	A	8	M6	20	-	-	35 / 50 / 65	9	18	-	-
06360-210X	steel	A	10	M8	25	-	-	50 / 65 / 80 / 100	13	22,5	-	-
06360-212X	steel	A	12	M10	32	-	-	65 / 80 / 100 / 125	15	29	-	-
06360-214X	steel	A	14	M12	35	-	-	80 / 100 / 125 / 160	16	32,5	-	-
06360-408X	steel	C	8	M6	-	20	-	35 / 50 / 65	9	-	30	-
06360-410X	steel	C	10	M8	-	25	-	50 / 65 / 80 / 100	13	-	38	-
06360-412X	steel	C	12	M10	-	30	-	65 / 80 / 100 / 125	15	-	46	-
06360-414X	steel	C	14	M12	-	35	-	80 / 100 / 125 / 160	16	-	53	-
06360-608X	steel	E	8	M6	-	-	17	35 / 50 / 65	9	-	-	45
06360-610X	steel	E	10	M8	-	-	23	50 / 65 / 80 / 100	13	-	-	60
06360-612X	steel	E	12	M10	-	-	28	65 / 80 / 100 / 125	15	-	-	70
06360-614X	steel	E	14	M12	-	-	28	80 / 100 / 125 / 160	16	-	-	70

Order No.	Surface finish	Form	D	D1	D2	D3	D5	L	L1	L2	L3	L5
06360-1208X	stainless steel	A	8	M6	20	-	-	35 / 50 / 65	9	18	-	-
06360-1210X	stainless steel	A	10	M8	25	-	-	50 / 65 / 80 / 100	13	22,5	-	-
06360-1212X	stainless steel	A	12	M10	32	-	-	65 / 80 / 100 / 125	15	29	-	-
06360-1214X	stainless steel	A	14	M12	35	-	-	80 / 100 / 125 / 160	16	32,5	-	-
06360-1408X	stainless steel	C	8	M6	-	20	-	35 / 50 / 65	9	-	30	-
06360-1410X	stainless steel	C	10	M8	-	25	-	50 / 65 / 80 / 100	13	-	38	-
06360-1412X	stainless steel	C	12	M10	-	30	-	65 / 80 / 100 / 125	15	-	46	-
06360-1414X	stainless steel	C	14	M12	-	35	-	80 / 100 / 125 / 160	16	-	53	-
06360-1608X	stainless steel	E	8	M6	-	-	17	35 / 50 / 65	9	-	-	45
06360-1610X	stainless steel	E	10	M8	-	-	23	50 / 65 / 80 / 100	13	-	-	60
06360-1612X	stainless steel	E	12	M10	-	-	28	65 / 80 / 100 / 125	15	-	-	70
06360-1614X	stainless steel	E	14	M12	-	-	28	80 / 100 / 125 / 160	16	-	-	70

Clamp Hubs



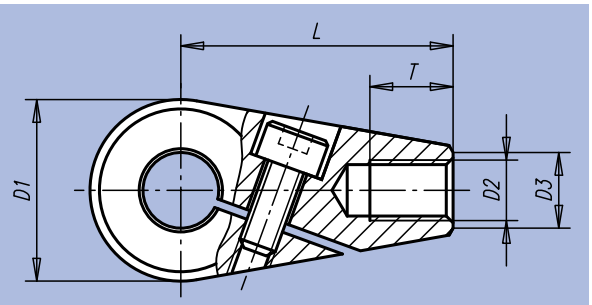

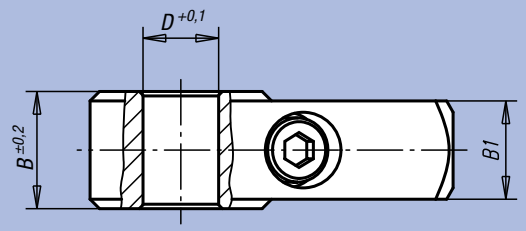

Material, Surface finish:
Tempered steel 1.1206, black oxide finish

Sample order:
nlm 06362-1012

Note:
Clamp hubs can be quickly and easily attached to shafts, adjusted in the proper operating position and then locked. For secure transmission of torque, shaft tolerance should not exceed h11.
At fastening thread (D2), customer-specific handles or 06360 handles can be screwed on.

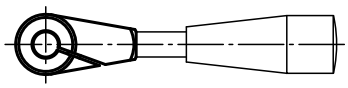

Order No.	D	D1	D2	D3	B	B1	L	T	kg
06362-0810	10	24	M8	10	15,5	13	36	11	0,078
06362-0812	12	24	M8	10	15,5	13	36	11	0,074
06362-1012	12	28	M10	12	17,5	15	41	14	0,118
06362-1014	14	28	M10	12	17,5	15	41	14	0,113
06362-1214	14	32	M12	14	19,5	17	45	16	0,169
06362-1216	16	32	M12	14	19,5	17	45	16	0,162

Tension Levers

with internal thread



Material:
Steel parts quality class 5.8;
black plastic ball knob

Surface finish:
Plastic-coated with fine texture, black

Sample order:
nlm 06370-1082

On request:
Other internal threads and special versions.
Dimension “H1“, “A“ and “A1“ available in other lengths at extra charge.

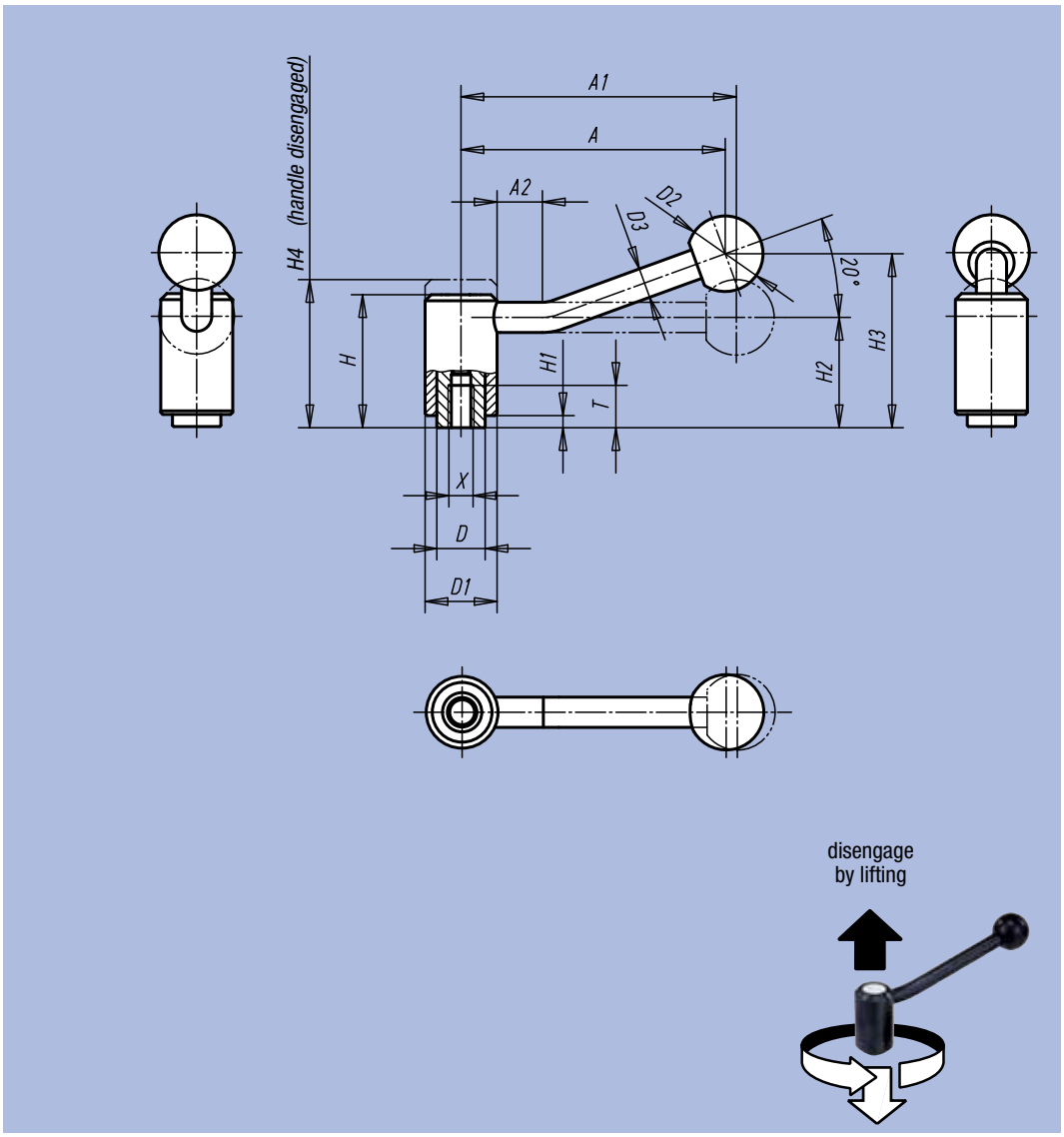

Order No. Surface finish 0 degree	Order No. Surface finish 20 degrees	Size	Internal thread X	T	D	D1	D2	D3	H	H1	H2	H3	H4	A	A1	A2	No. of teeth	kg
06370-1082	06370-1081	1	M8	14	16	24	25	10	44,5	4,5	37	58,5	49,5	88	92	15	22	0,170
06370-1102	06370-1101	1	M10	14	16	24	25	10	44,5	4,5	37	58,5	49,5	88	92	15	22	0,170
06370-2102	06370-2101	2	M10	17	19	28	32	12	51,5	5,5	42	68,5	57,5	106	111	15	24	0,260
06370-2122	06370-2121	2	M12	17	19	28	32	12	51,5	5,5	42	68,5	57,5	106	111	15	24	0,260
06370-3122	06370-3121	3	M12	23	23	33	32	13	58	6	47	81	65	128,5	134,5	15	26	0,400
06370-3162	06370-3161	3	M16	23	23	33	32	13	58	6	47	81	65	128,5	134,5	15	26	0,400
06370-4162	06370-4161	4	M16	27	30	41	32	13	68,5	7,5	56,5	89,5	76,5	128,5	134	15	36	0,670
06370-4202	06370-4201	4	M20	27	30	41	32	13	68,5	7,5	56,5	89,5	76,5	128,5	134	15	36	0,670
06370-4242	06370-4241	4	M24	27	30	41	32	13	68,5	7,5	56,5	89,5	76,5	128,5	134	15	36	1,000

Tension Levers in stainless steel

with internal thread



Material:
Steel parts in stainless steel, 1.4305; black plastic ball knob

Surface finish:
Steel parts natural finish

Sample order:
nlm 06371-1082

On request:
Other internal threads and special versions.
Dimension “H1“, “A“ and “A1“ available in other lengths at extra charge.

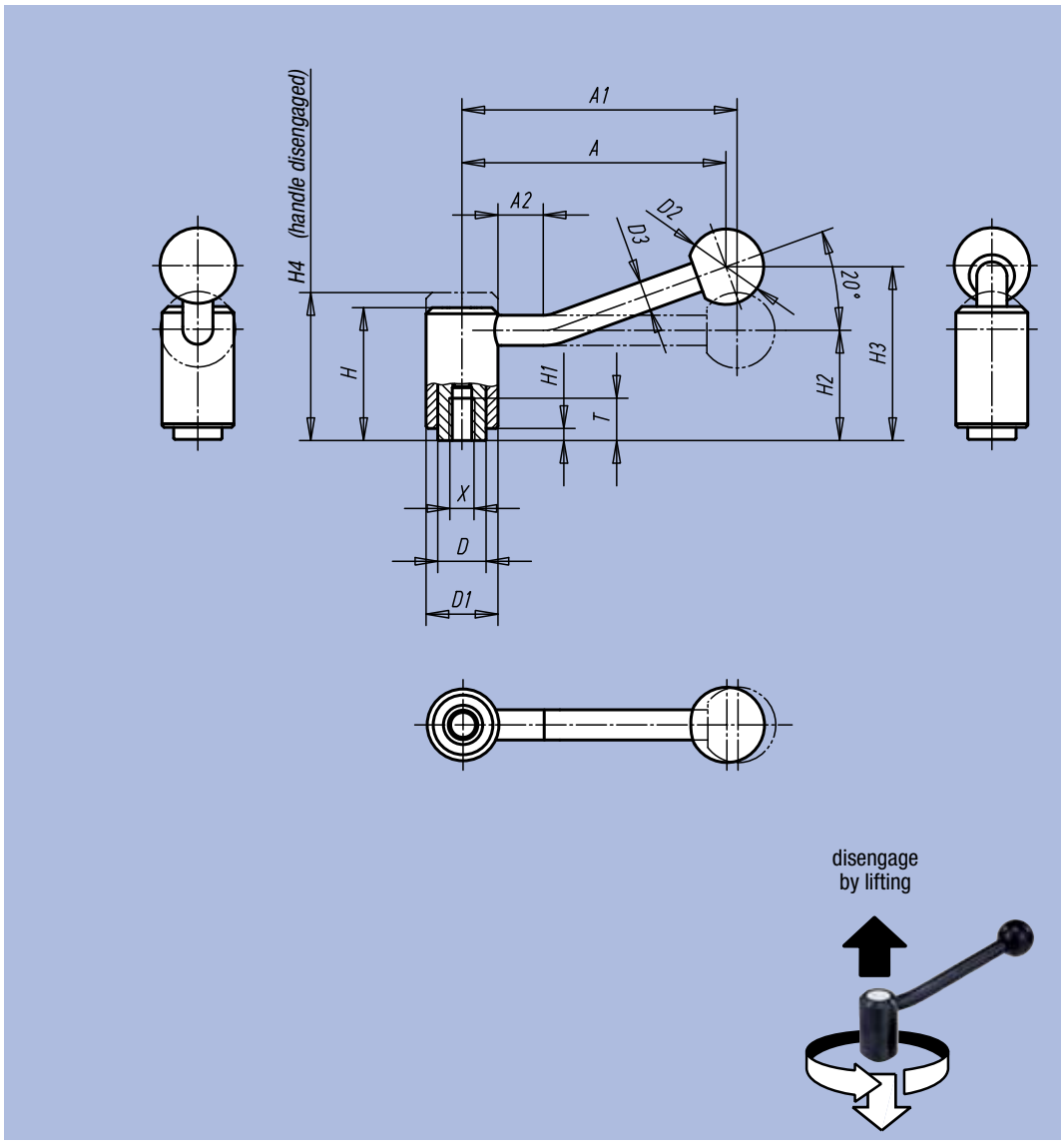

Order No. Surface finish 0 degree	Order No. Surface finish 20 degrees	Size	Internal thread X	T	D	D1	D2	D3	H	H1	H2	H3	H4	A	A1	A2	No. of teeth
06371-1082	06371-1081	1	M8	14	16	24	25	10	44,5	4,5	37	58,5	49,5	88	92	15	22
06371-1102	06371-1101	1	M10	14	16	24	25	10	44,5	4,5	37	58,5	49,5	88	92	15	22
06371-2102	06371-2101	2	M10	17	19	28	32	12	51,5	5,5	42	68,5	57,5	106	111	15	24
06371-2122	06371-2121	2	M12	17	19	28	32	12	51,5	5,5	42	68,5	57,5	106	111	15	24
06371-3122	06371-3121	3	M12	23	23	33	32	13	58	6	47	81	65	128,5	134,5	15	26
06371-3162	06371-3161	3	M16	23	23	33	32	13	58	6	47	81	65	128,5	134,5	15	26
06371-4162	06371-4161	4	M16	27	30	41	32	13	68,5	7,5	56,5	89,5	76,5	128,5	134	15	36
06371-4202	06371-4201	4	M20	27	30	41	32	13	68,5	7,5	56,5	89,5	76,5	128,5	134	15	36

Tension Levers

with external thread



Material:
Steel parts quality class 5.8;
black plastic ball knob

Surface finish:
Plastic-coated with fine texture, black

Sample order:
nlm 06380-1082X30
(please also indicate dimension L)

Note:
Missing dimensions see 06370.

On request:
Other external threads, screw lengths and special versions. Dimension „H1“, „A“ and „A1“ available in other lengths at extra charge.

example:

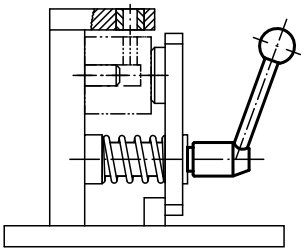

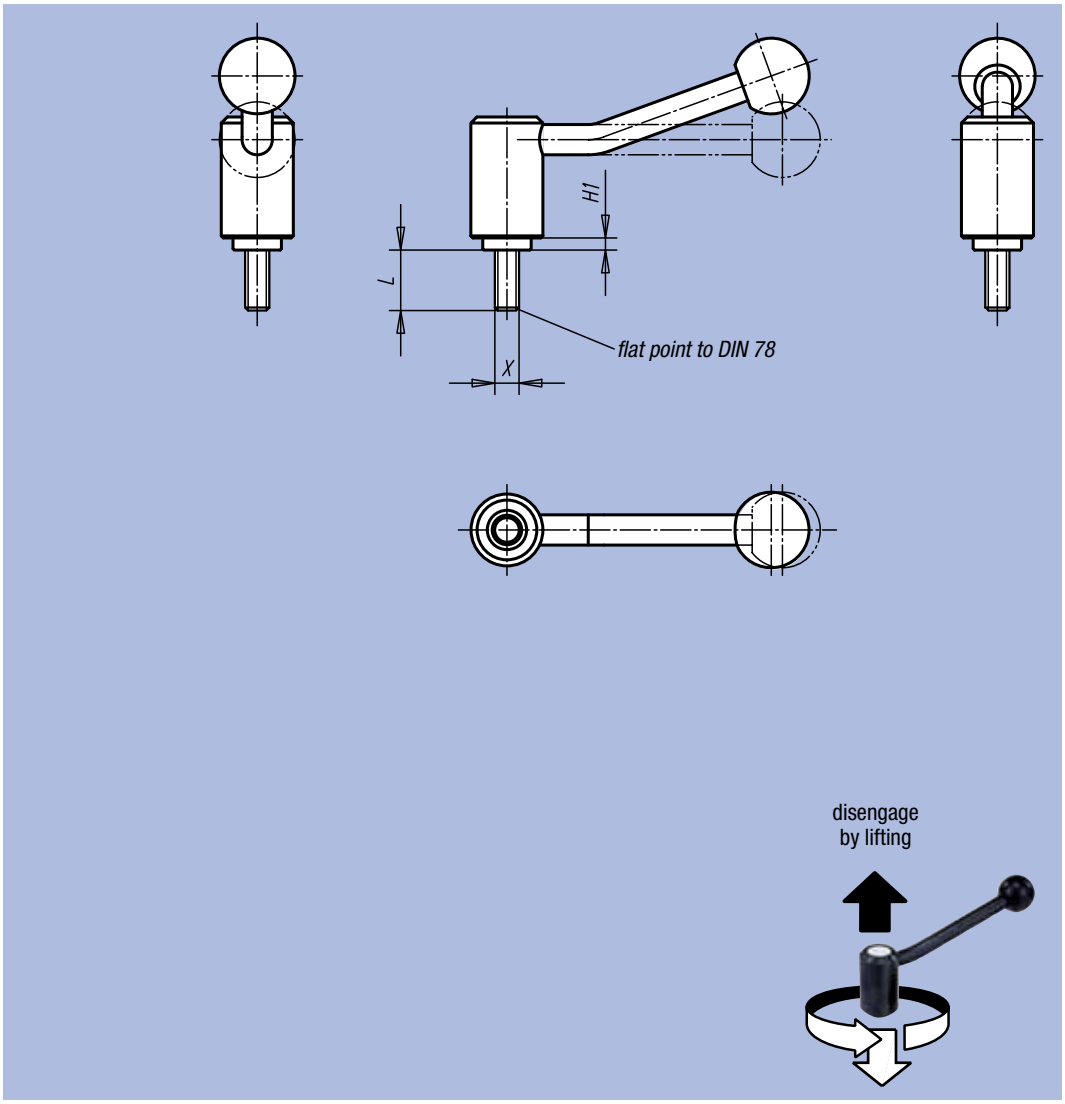

Order No. Surface finish 0 degree	Order No. Surface finish 20 degrees	Size	External thread X	H1	L = screw length
06380-1082X	06380-1081X	1	M8	4,5	15 / 20 / 25 / 30 / 40 / 50 / 60
06380-1102X	06380-1101X	1	M10	4,5	15 / 20 / 25 / 30 / 40 / 50 / 60
06380-1122X	06380-1121X	1	M12	4,5	15 / 20 / 25 / 30 / 40 / 50 / 60
06380-2122X	06380-2121X	2	M12	5,5	20 / 25 / 30 / 40 / 50 / 60
06380-3122X	06380-3121X	3	M12	6	20 / 25 / 30 / 40 / 50 / 60 / 70 / 80 / 90
06380-3162X	06380-3161X	3	M16	6	20 / 25 / 30 / 40 / 50 / 60 / 70 / 80 / 90
06380-4162X	06380-4161X	4	M16	7,5	30 / 40 / 50 / 60 / 70 / 80 / 90
06380-4202X	06380-4201X	4	M20	7,5	30 / 40 / 50 / 60 / 70 / 80 / 90
06380-4242X	06380-4241X	4	M24	7,5	30 / 40 / 50 / 60 / 70 / 80 / 90

Tension Levers in stainless steel

with external thread





Material:
Steel parts in stainless steel 1.4305; black plastic ball knob

Surface finish:
Steel parts natural finish

Sample order:
nlm 06381-1082X30
(please also indicate dimension L)

Note:
Missing dimensions see 06371.

On request:
Other external threads, screw lengths and special versions. Dimension „H1“, „A“ and „A1“ available in other lengths at extra charge.

example:

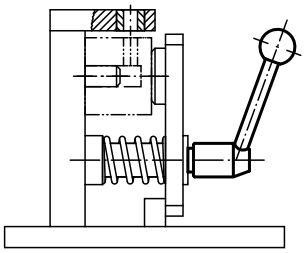

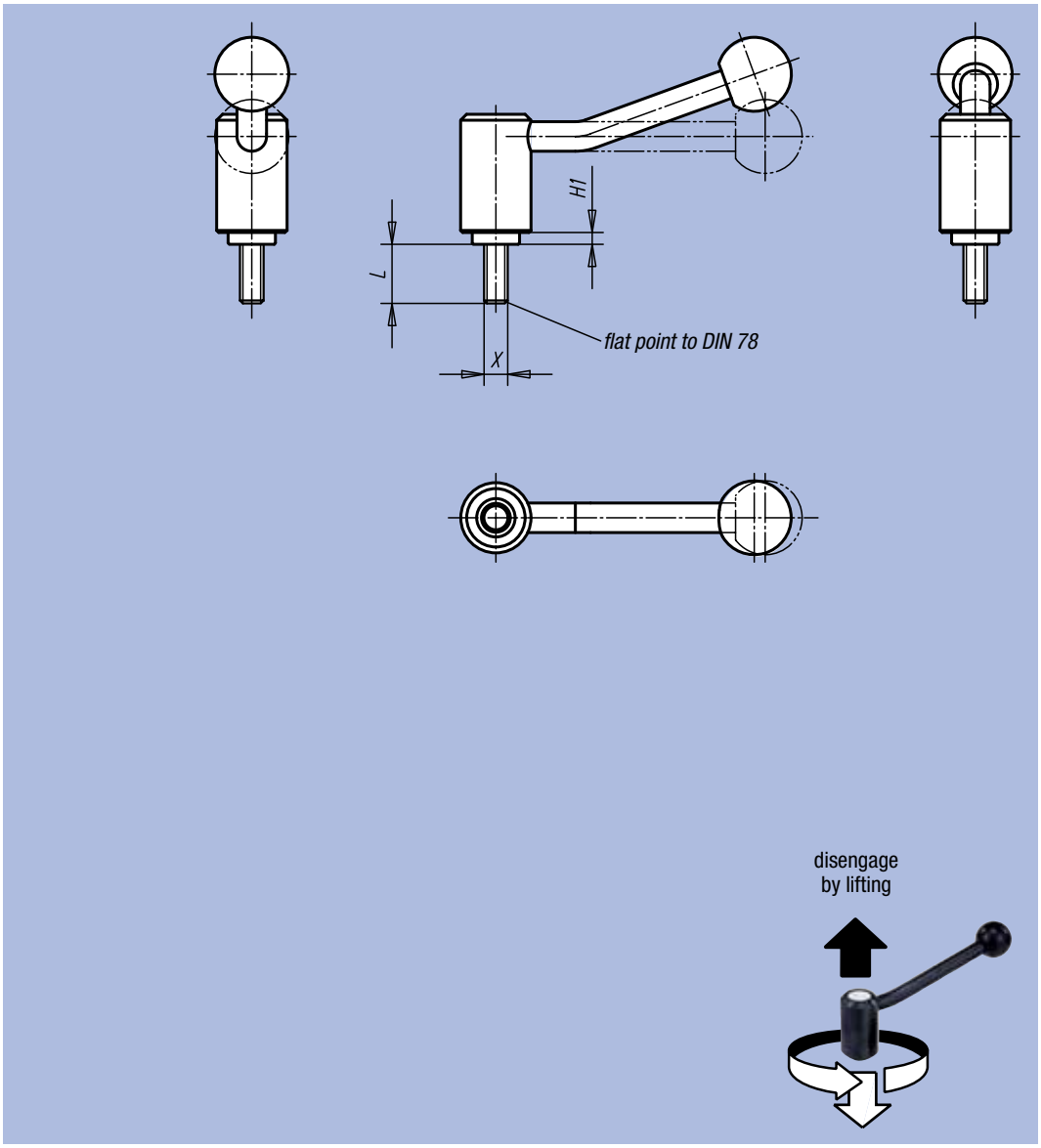

Order No. Surface finish 0 degree	Order No. Surface finish 20 degrees	Size	External thread X	H1	L = screw length
06381-1082X	06381-1081X	1	M8	4,5	15 / 20 / 25 / 30 / 40 / 50 / 60
06381-1102X	06381-1101X	1	M10	4,5	15 / 20 / 25 / 30 / 40 / 50 / 60
06381-1122X	06381-1121X	1	M12	4,5	15 / 20 / 25 / 30 / 40 / 50 / 60
06381-2122X	06381-2121X	2	M12	5,5	20 / 25 / 30 / 40 / 50 / 60
06381-3122X	06381-3121X	3	M12	6	20 / 25 / 30 / 40 / 50 / 60 / 70 / 80 / 90
06381-3162X	06381-3161X	3	M16	6	20 / 25 / 30 / 40 / 50 / 60 / 70 / 80 / 90
06381-4162X	06381-4161X	4	M16	7,5	30 / 40 / 50 / 60 / 70 / 80 / 90
06381-4202X	06381-4201X	4	M20	7,5	30 / 40 / 50 / 60 / 70 / 80 / 90

Safety Tension Levers

with internal thread



Material:
Steel parts quality class 5.8;
black plastic ball knob

Surface finish:
Plastic-coated with fine texture, black

Sample order:
nlm 06382-1108

Method of operation:
To operate Safety Tension Levers, press the handle down until the teeth are fully engaged. The object concerned can now be clamped or released. Spring pressure releases the locking mechanism immediately, thereby restoring the safety function (handle can be turned effortlessly).

On request:
Special versions.
Dimension „H1“ and „A“ available in other lengths at extra charge.

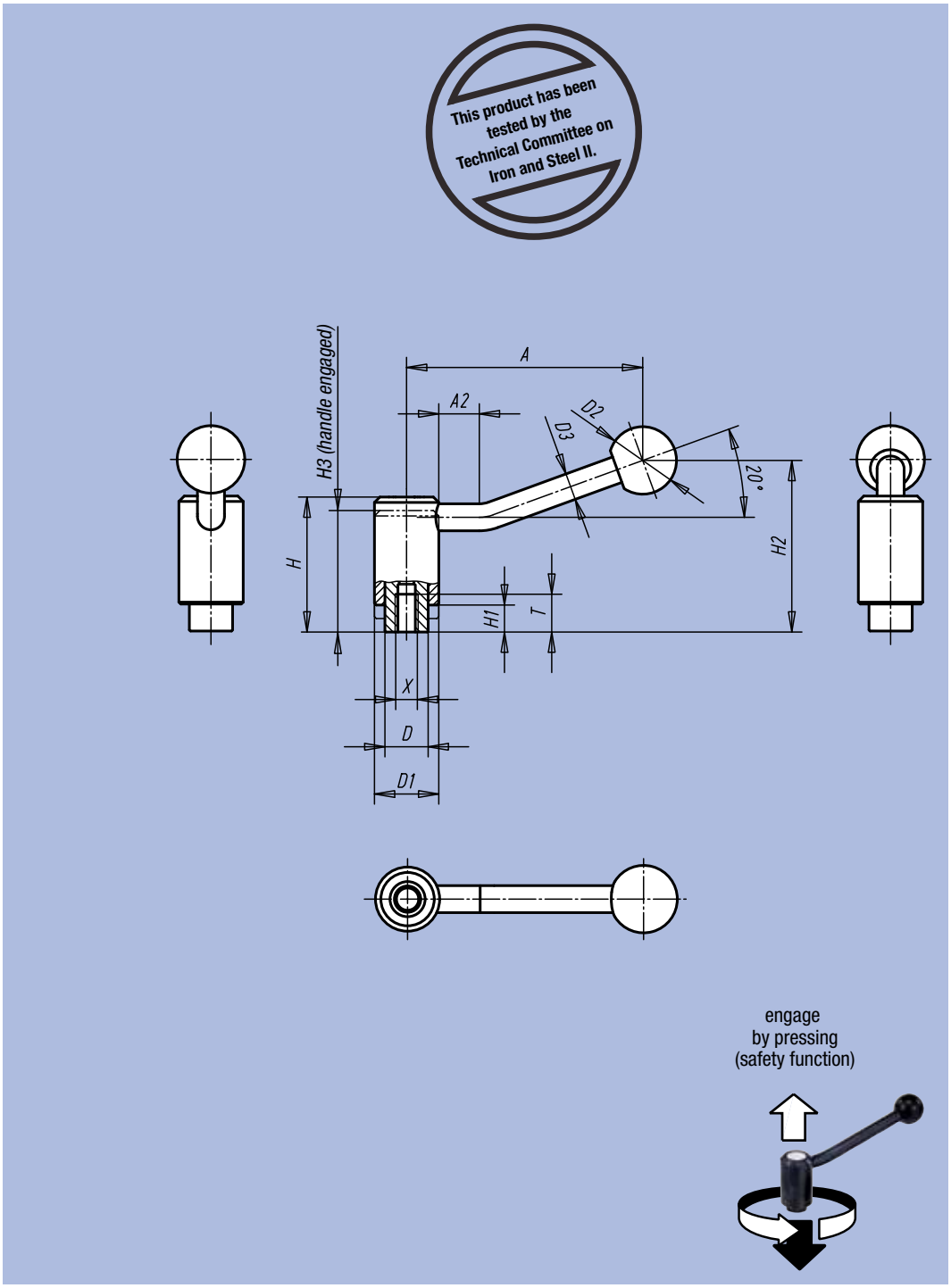

Order No.	Size	Internal thread X	T	D	D1	D2	D3	H	H1	H2	H3	A	A2	No. of teeth	kg
06382-1108	1	M8	14	16	24	25	10	49,5	9,5	63,5	44,5	88	15	22	0,160
06382-1110	1	M10	14	16	24	25	10	49,5	9,5	63,5	44,5	88	15	22	0,160
06382-1210	2	M10	17	19	28	32	12	56,5	10,5	74	51	106	15	24	0,250
06382-1212	2	M12	17	19	28	32	12	56,5	10,5	74	51	106	15	24	0,250
06382-1312	3	M12	23	23	33	32	13	64,5	12,5	87,5	57,5	128,5	15	26	0,370
06382-1316	3	M16	23	23	33	32	13	64,5	12,5	87,5	57,5	128,5	15	26	0,370

Safety Tension Levers

with external thread



Material:
Steel parts quality class 5.8,
black plastic ball knob

Surface finish:
Plastic-coated with
fine texture, black

Sample order:
nlm 06383-1108X30
(please also indicate dimension L)

Note:
Missing dimensions see 06382.

Actuation:
To operate Safety Tension Levers, press the handle down until the teeth are fully engaged. The object concerned can now be clamped or released. Spring pressure releases the locking mechanism immediately, thereby restoring the safety function (handle can be turned effortlessly).

On request:
Other external threads, screw lengths and special versions.
Dimension „H1“ and „A“ available in other lengths at extra charge.

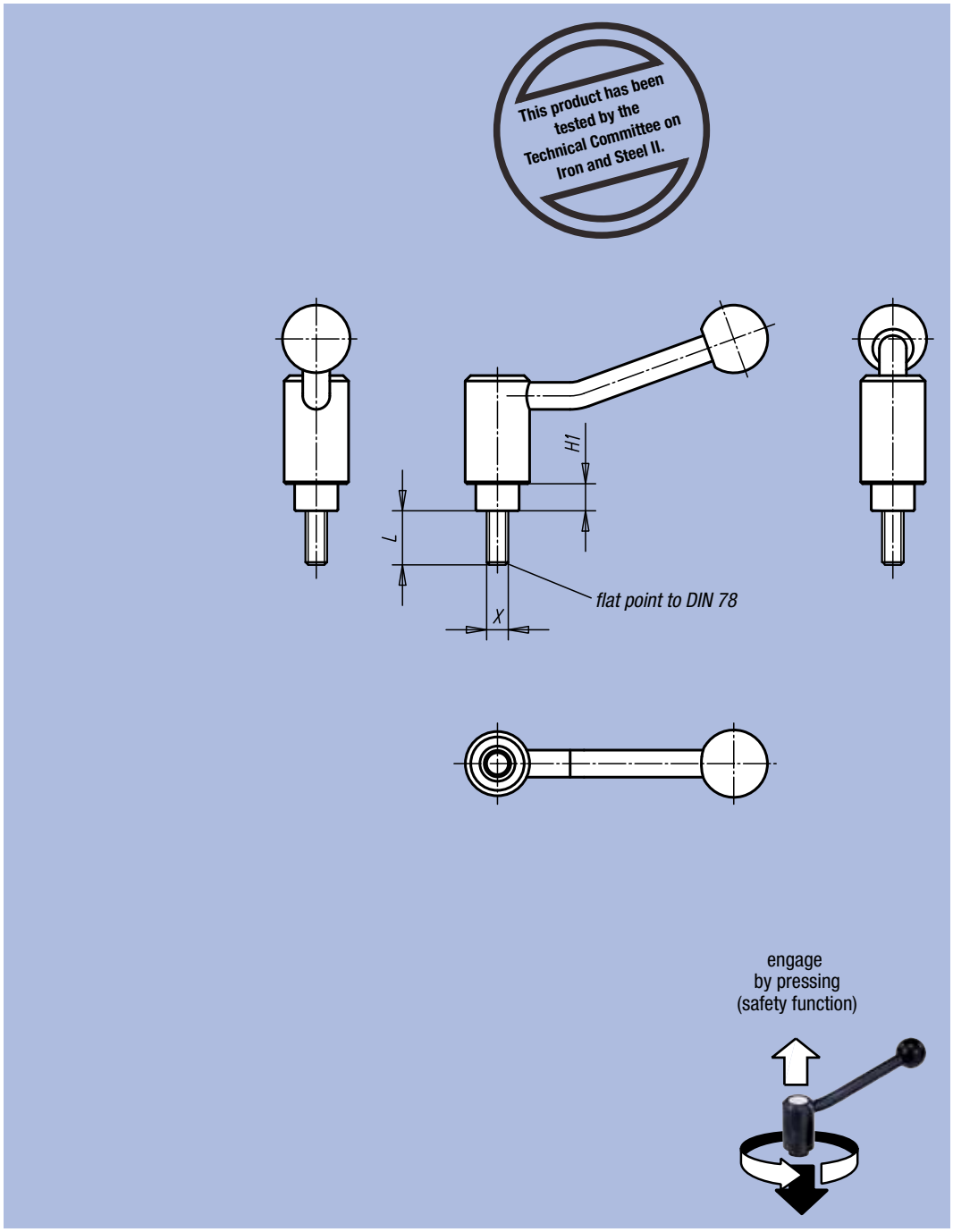

Order No.	Size	External thread X	H1	L = screw length
06383-1108X	1	M8	9,5	20 / 25 / 30 / 40 / 50 / 60
06383-1110X	1	M10	9,5	20 / 25 / 30 / 40 / 50 / 60
06383-1112X	1	M12	9,5	20 / 25 / 30 / 40 / 50 / 60
06383-1212X	2	M12	10,5	20 / 25 / 30 / 40 / 50 / 60
06383-1312X	3	M12	12,5	25 / 30 / 40 / 50 / 60
06383-1316X	3	M16	12,5	25 / 30 / 40 / 50 / 60

Flat Tension Levers

with internal thread



Material:
Steel parts quality class 5.8, black plastic ball knob

Surface finish:
Black oxide finish

Sample order:
nlm 06390-1061

On request:
Other internal threads and special versions.
Dimension „H1“, „A“ and „A1“ available in other lengths at extra charge.

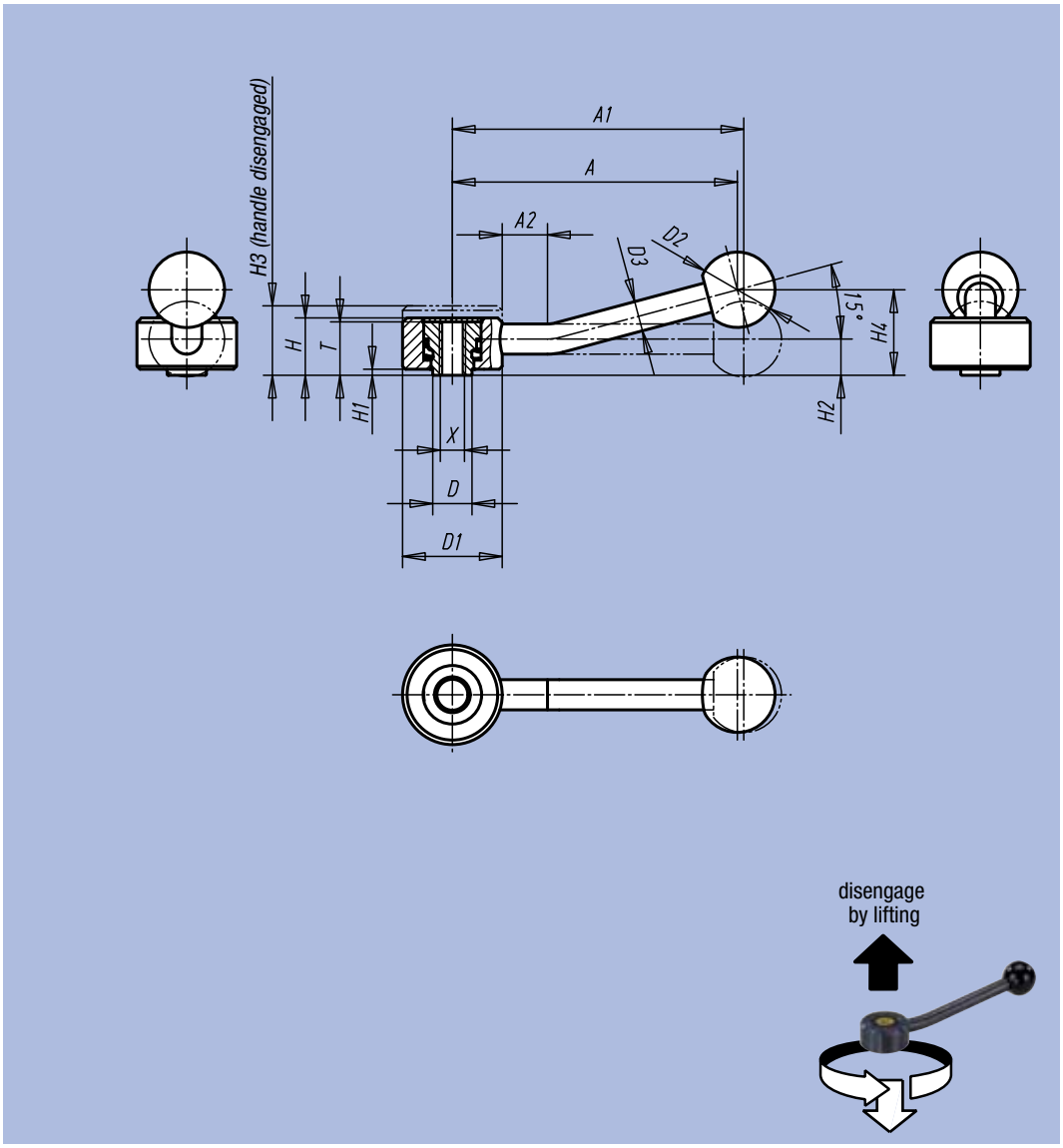

Order No. Surface finish 0 degree	Order No. Surface finish 15 degrees	Size	Internal thread X	T	D	D1	D2	D3	H	H1	H2	H3	H4	A	A1	A2	No. of teeth	□ kg
06390-1061	06390-1062	1	M6	18	13,5	33	25	10	19	2	12	23	29	100	102	15	20	0,160
06390-1081	06390-1082	1	M8	18	13,5	33	25	10	19	2	12	23	29	100	102	15	20	0,160
06390-2101	06390-2102	2	M10	21	19	41	30	12	22	2	13,5	26	38	127	131	15	24	0,290
06390-2121	06390-2122	2	M12	21	19	41	30	12	22	2	13,5	26	38	127	131	15	24	0,290
06390-3121	06390-3122	3	M12	27	23	45	37	14	28	2	17	33	48	145	148	15	26	0,450
06390-3161	06390-3162	3	M16	27	23	45	37	14	28	2	17	33	48	145	148	15	26	0,450

Flat Tension Levers

with external thread



Material:
Steel parts quality class 5.8,
black plastic ball knob

Surface finish:
Black oxide finish

Sample order:
nlm 06400-1081X30
(please also indicate dimension L)

Note:
Missing dimensions see 06390.

On request:
Other external threads, screw lengths and special versions. Dimension „H1“, „A“ and „A1“ available in other lengths at extra charge.

example:

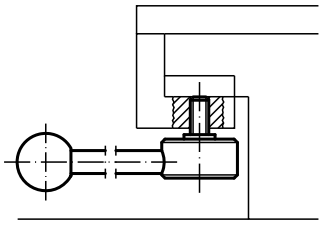

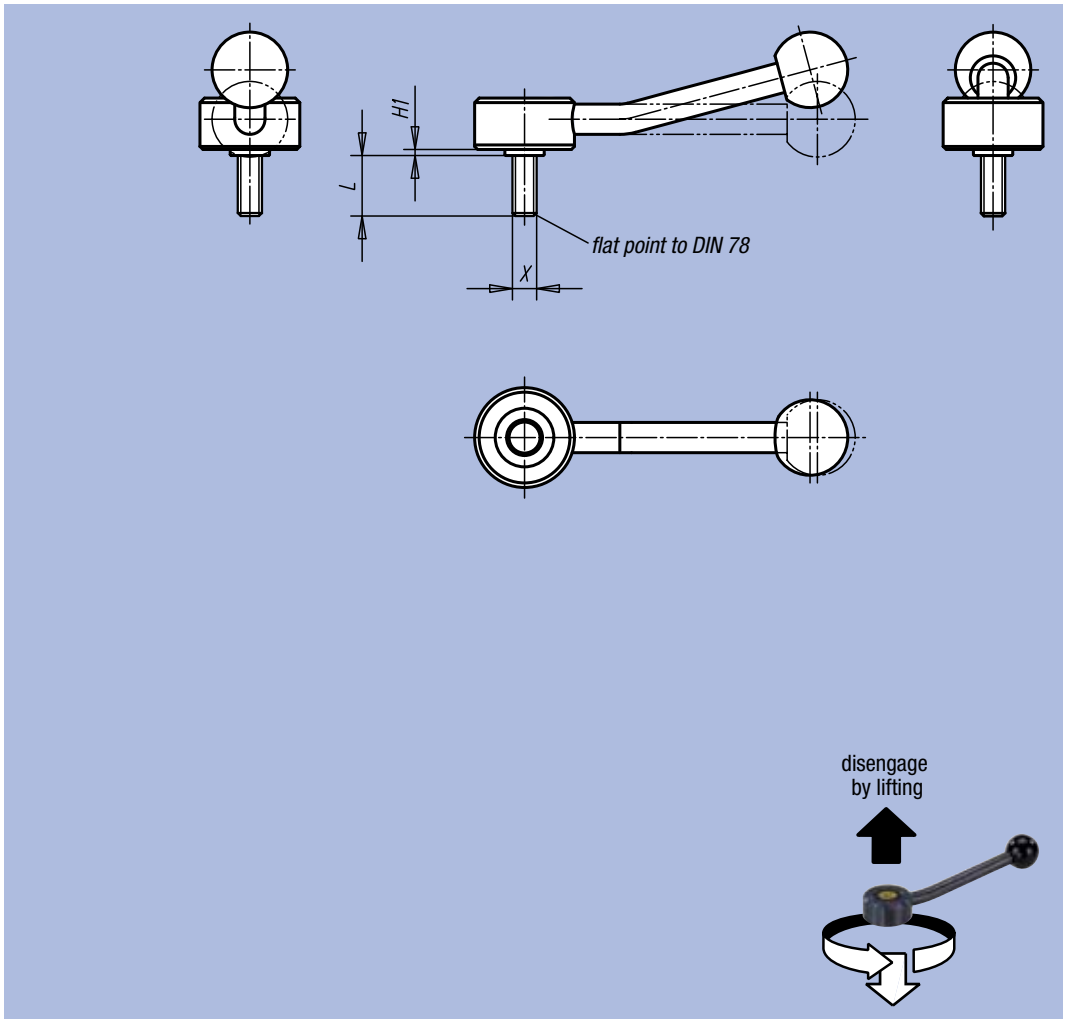

Order No. Surface finish 0 degree	Order No. Surface finish 15 degrees	Size	External thread X	H1	L = screw length
06400-1081X	06400-1082X	1	M8	2	15 / 20 / 25 / 30 / 40 / 50 / 60
06400-1101X	06400-1102X	1	M10	2	15 / 20 / 25 / 30 / 40 / 50 / 60
06400-2101X	06400-2102X	2	M10	2	20 / 25 / 30 / 40 / 50 / 60
06400-2121X	06400-2122X	2	M12	2	20 / 25 / 30 / 40 / 50 / 60
06400-3121X	06400-3122X	3	M12	2	20 / 25 / 30 / 40 / 50 / 60
06400-3161X	06400-3162X	3	M16	2	20 / 25 / 30 / 40 / 50 / 60

Clamp Levers

with internal thread



Material:
Handle in die cast zinc
to DIN 1743,
steel parts quality class 5.8

Surface finish:
Handle plastic-coated,
steel parts black oxide finish

Sample order:
nlm 06410-4103

Note:
Standard colours are:
black satin finish, silver metallic.

On request:
Other internal threads, colours and special versions.
Dimension „H1“ available in other lengths at extra charge.

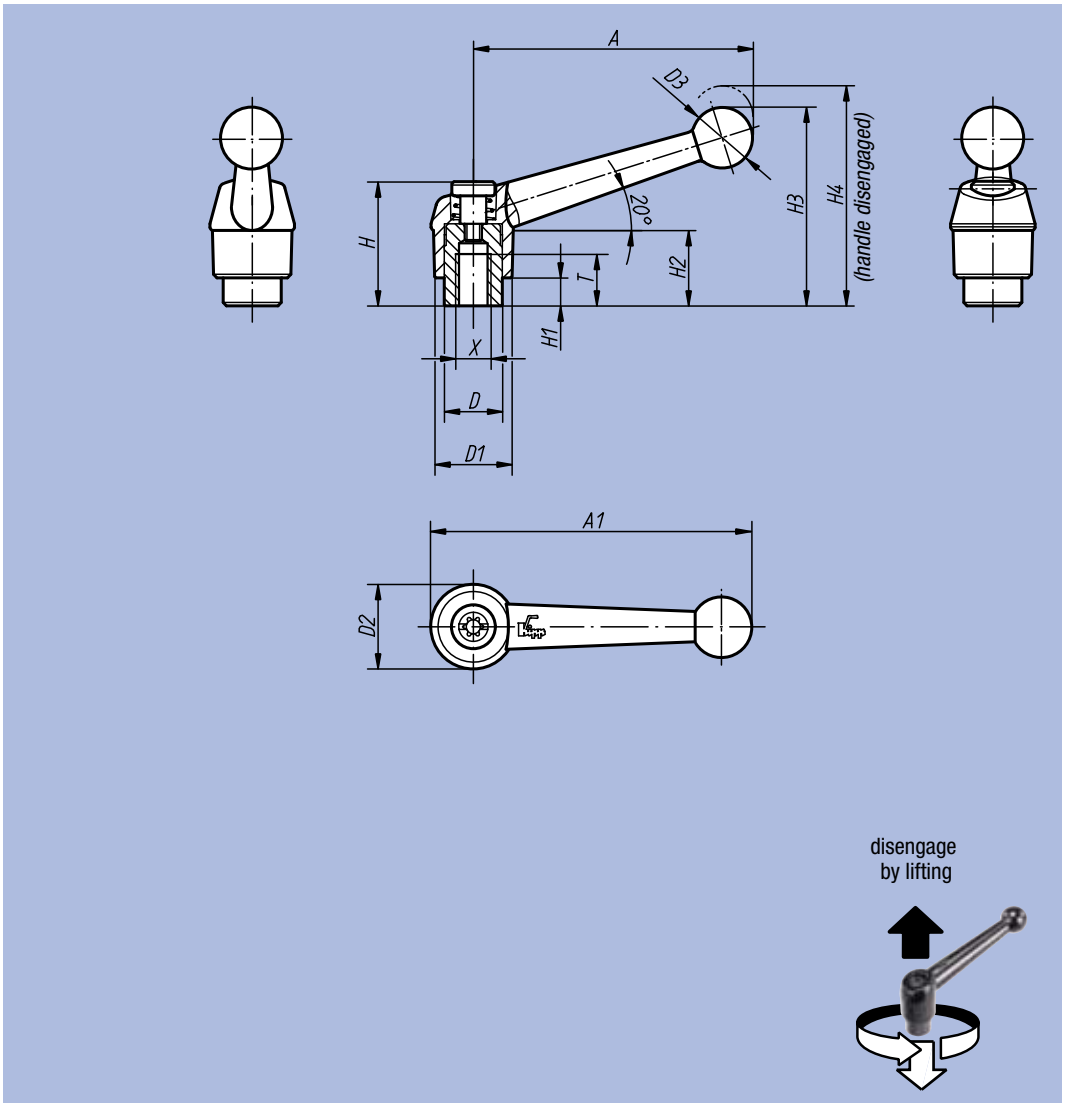

Order No. Colour black satin finish	Order No. Colour silver metallic	Size	Internal thread X	T	D	D1	D2	D3	H	H1	H2	H3	H4	A	A1	No. of teeth
06410-1041	06410-1043	1	M4	9	10	13	14	10,5	24,5	4	15	32,5	35,5	39	46	16
06410-1051	06410-1053	1	M5	9	10	13	14	10,5	24,5	4	15	32,5	35,5	39	46	16
06410-1061	06410-1063	1	M6	9	10	13	14	10,5	24,5	4	15	32,5	35,5	39	46	16
06410-2061	06410-2063	2	M6	12	13,5	18	18,5	15,5	28,5	6,5	16,5	45,5	49,5	64	73	20
06410-2081	06410-2083	2	M8	12	13,5	18	18,5	15,5	28,5	6,5	16,5	45,5	49,5	64	73	20
06410-3081	06410-3083	3	M8	14	16	21	22	17	37	10	23	57,5	61,5	79	90	22
06410-3101	06410-3103	3	M10	14	16	21	22	17	37	10	23	57,5	61,5	79	90	22
06410-4101	06410-4103	4	M10	17	19	25	26	19	42,5	10	26	67	72	95	108	24
06410-4121	06410-4123	4	M12	17	19	25	26	19	42,5	10	26	67	72	95	108	24
06410-5121	06410-5123	5	M12	23	23	30	31	22	49	12	32	79	84	110	126	26
06410-5161	06410-5163	5	M16	23	23	30	31	22	49	12	32	79	84	110	126	26

Clamp Levers

with internal thread, steel parts in stainless steel



Material:
Handle in die cast zinc to DIN 1743,
steel parts in stainless steel 1.4305

Surface finish:
Handle plastic-coated,
steel parts natural finish

Sample order:
nlm 06411-2061

Note:
Standard colours are:
black satin finish, silver metallic.

On request:
Other internal threads, colours and special versions.
Dimension „H1“ available in other lengths at extra charge.

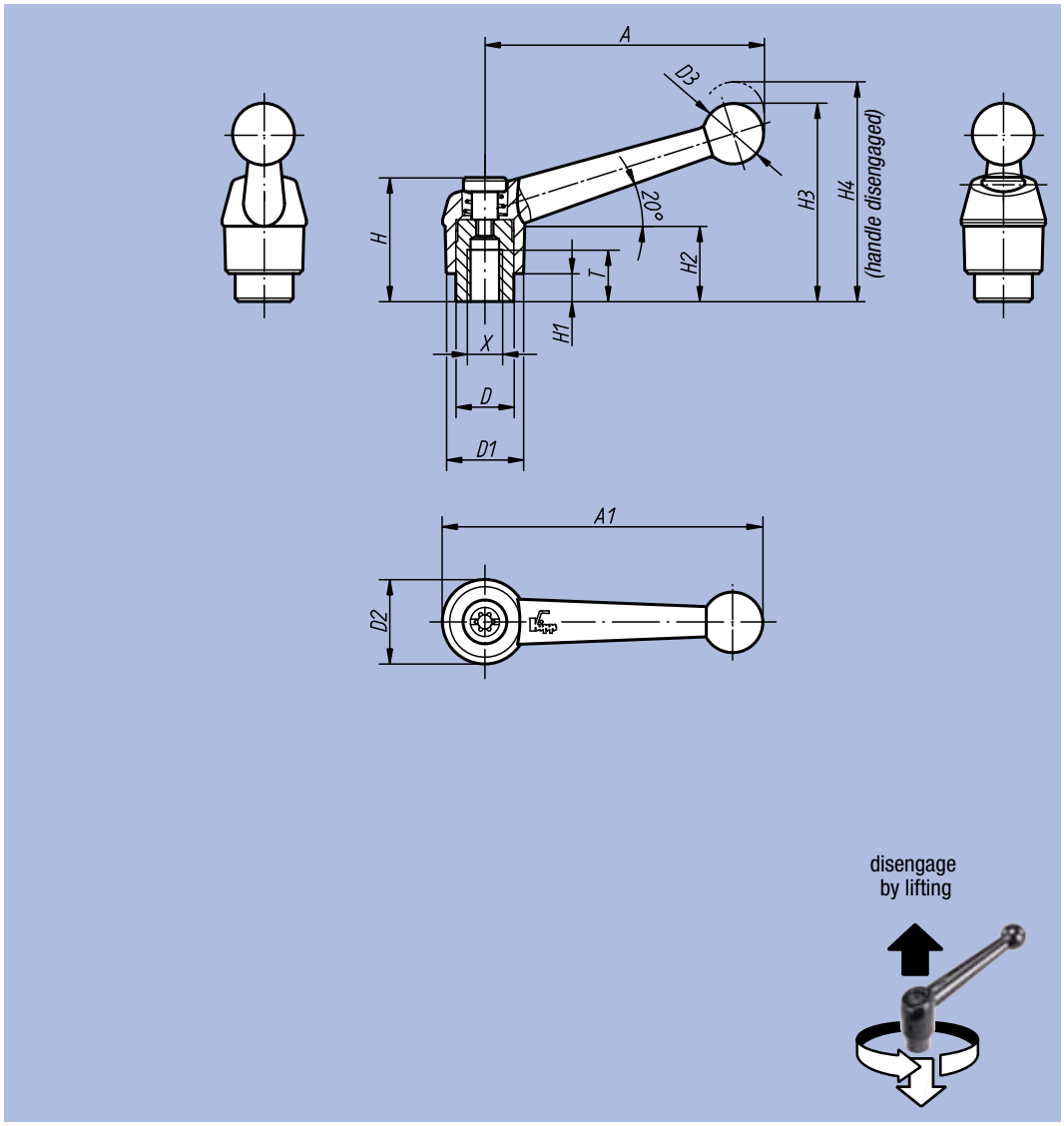

Order No. Colour black satin finish	Order No. Colour silver metallic	Size	Internal thread X	T	D	D1	D2	D3	H	H1	H2	H3	H4	A	A1	No. of teeth
06411-1041	06411-1043	1	M4	9	10	13	14	10,5	24,5	4	15	32,5	35,5	39	46	16
06411-1051	06411-1053	1	M5	9	10	13	14	10,5	24,5	4	15	32,5	35,5	39	46	16
06411-1061	06411-1063	1	M6	9	10	13	14	10,5	24,5	4	15	32,5	35,5	39	46	16
06411-2061	06411-2063	2	M6	12	13,5	18	18,5	15,5	28,5	6,5	16,5	45,5	49,5	64	73	20
06411-2081	06411-2083	2	M8	12	13,5	18	18,5	15,5	28,5	6,5	16,5	45,5	49,5	64	73	20
06411-3081	06411-3083	3	M8	14	16	21	22	17	37	10	23	57,5	61,5	79	90	22
06411-3101	06411-3103	3	M10	14	16	21	22	17	37	10	23	57,5	61,5	79	90	22
06411-4101	06411-4103	4	M10	17	19	25	26	19	42,5	10	26	67	72	95	108	24
06411-4121	06411-4123	4	M12	17	19	25	26	19	42,5	10	26	67	72	95	108	24
06411-5121	06411-5123	5	M12	23	23	30	31	22	49	12	32	79	84	110	126	26
06411-5161	06411-5163	5	M16	23	23	30	31	22	49	12	32	79	84	110	126	26

Ball handles



Material:
Steel,
ball handle: Duroplast

Surface finish:
black oxide finish,
head of handle black

Sample order:
nlm 06420-112

with locating hole

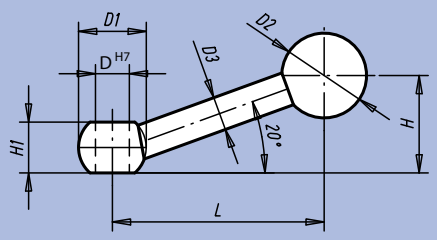

with internal thread

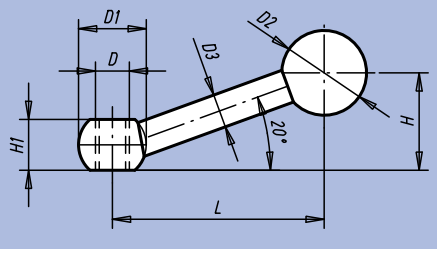

Order No. Surface finish Locating hole	Order No. Surface finish Internal thread	D	D1	D2	D3	H	H1	L	kg
06420-108	06420-208	M8	16	20	8	23	12	50	0,030
06420-110	06420-210	M10	20	20	9	30	14,5	66	0,055
06420-112	06420-212	M12	25	25	11	37,5	18,5	82,5	0,105
06420-116	06420-216	M16	32	32	15	47	24	103	0,225

Steel Clamp Levers



Material:
Steel,
ball handle: Duroplast

Surface finish:
steel black oxide finish,
head of handle black

Sample order:
nlm 06430-112

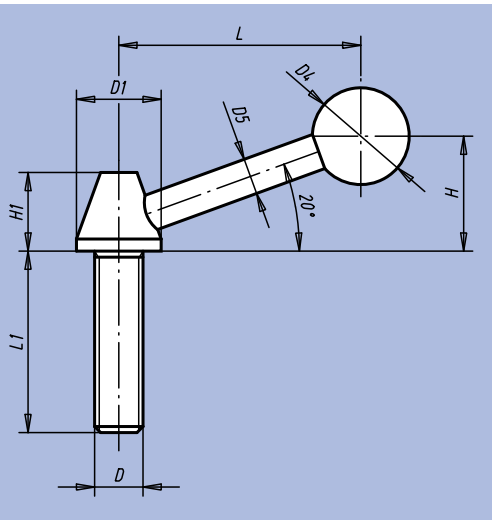

Order No.	D	D1	D4	D5	H	H1	L	L1	kg
06430-108	M8	14	16	6	19	13	40	45	0,050
06430-110	M10	18	20	6	24	17	54	60	0,080
06430-112	M12	22	30	10	42	19	82	70	0,150
06430-116	M16	25	32	12	55	23	110	75	0,265

Notes:

Clamp Levers

with external thread, steel or stainless steel



Material:
Handle in die cast zinc to DIN 1743;
steel parts quality class 5.8 or
steel parts in stainless steel 1.4305

Surface finish:
Handle plastic-coated;
steel black oxide finish;
stainless steel natural finish

Sample order:
nlm 06430-1051X20
(please also indicate dimension L)

Note:
Standard colours are:
black satin finish, silver metallic.

On request:
Other external threads, screw lengths, colours and special versions.
Dimension „H1“ available in other lengths at extra charge.

Thread:
The external screw threads are persistent up to 60 mm.
From 70 mm screw length, the threads are only 60 mm long.

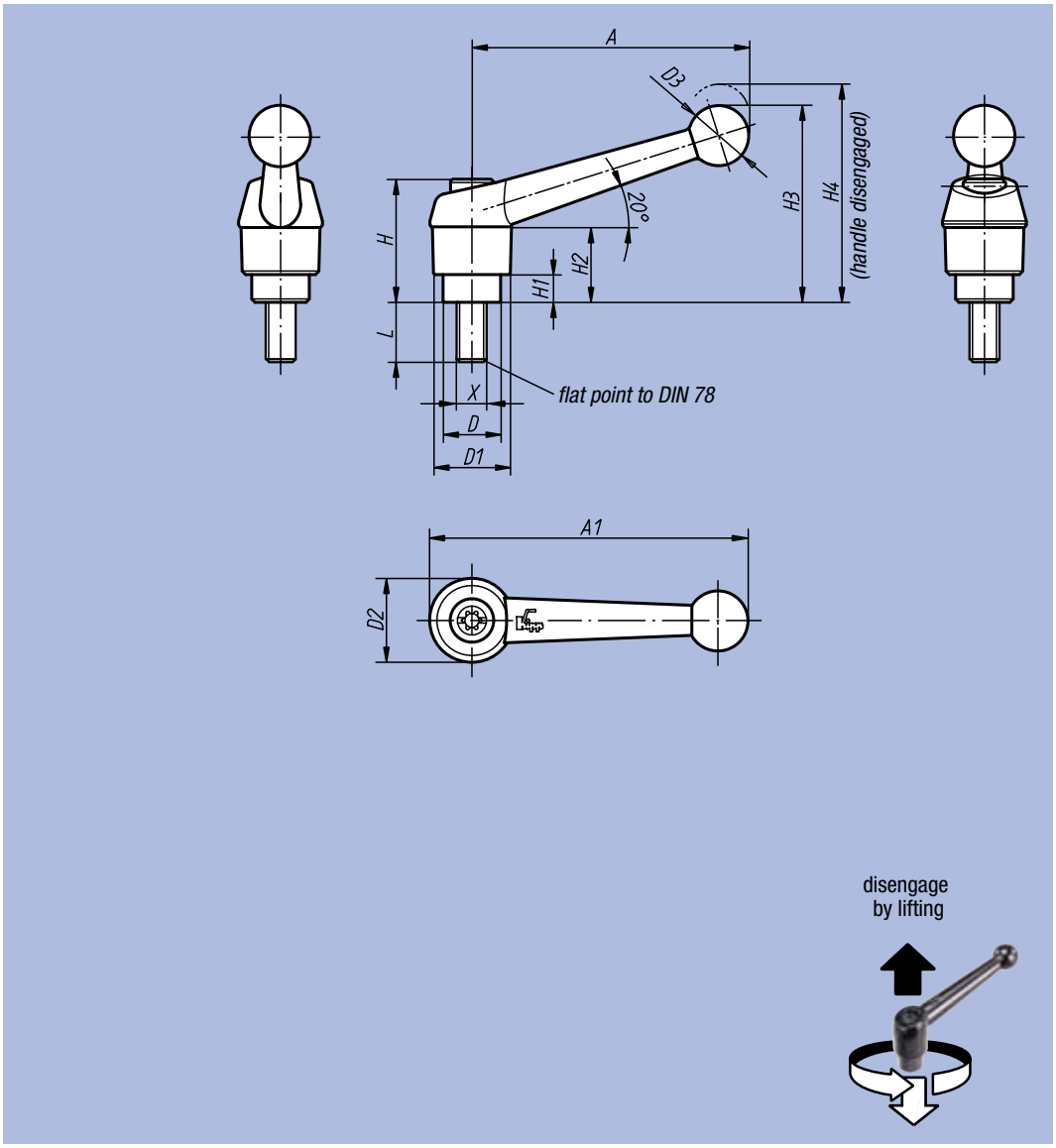

Clamp Levers

with external thread, steel or stainless steel

Technical Data

Size	External thread X	D	D1	D2	D3	H	H1	H2	H3	H4	A	A1	No. of teeth
1	M5	10	13	14	10,5	24,5	4	15	32,5	35,5	39	46	16
1	M6	10	13	14	10,5	24,5	4	15	32,5	35,5	39	46	16
2	M6	13,5	18	18,5	15,5	28,5	6,5	16,5	45,5	49,5	64	73	20
2	M8	13,5	18	18,5	15,5	28,5	6,5	16,5	45,5	49,5	64	73	20
2	M10	13,5	18	18,5	15,5	28,5	6,5	16,5	45,5	49,5	64	73	20
3	M8	16	21	22	17	37	10	23	57,5	61,5	79	90	22
3	M10	16	21	22	17	37	10	23	57,5	61,5	79	90	22
4	M10	19	25	26	19	42,5	10	26	67	72	95	108	24
4	M12	19	25	26	19	42,5	10	26	67	72	95	108	24
5	M12	23	30	31	22	49	12	32	79	84	110	126	26
5	M16	23	30	31	22	49	12	32	79	84	110	126	26

Clamp Levers with external thread, steel parts in steel

Order No. Colour black satin finish	Order No. Colour silver metallic	Size	External thread X	L = screw length
06430-1051X	06430-1053X	1	M5	10 / 15 / 20 / 25 / 30 / 35 / 40 / 45 / 50
06430-1061X	06430-1063X	1	M6	10 / 15 / 20 / 25 / 30 / 35 / 40 / 45 / 50
06430-2061X	06430-2063X	2	M6	15 / 20 / 25 / 30 / 35 / 40 / 45 / 50 / 55 / 60
06430-2081X	06430-2083X	2	M8	15 / 20 / 25 / 30 / 35 / 40 / 45 / 50 / 55 / 60
06430-2101X	06430-2103X	2	M10	15 / 20 / 25 / 30 / 35 / 40 / 45 / 50 / 55 / 60
06430-3081X	06430-3083X	3	M8	15 / 20 / 25 / 30 / 35 / 40 / 45 / 50 / 55 / 60
06430-3101X	06430-3103X	3	M10	15 / 20 / 25 / 30 / 35 / 40 / 45 / 50 / 55 / 60
06430-4101X	06430-4103X	4	M10	20 / 25 / 30 / 35 / 40 / 45 / 50 / 55 / 60 / 70 / 80 / 90
06430-4121X	06430-4123X	4	M12	20 / 25 / 30 / 35 / 40 / 45 / 50 / 55 / 60 / 70 / 80 / 90
06430-5121X	06430-5123X	5	M12	25 / 30 / 35 / 40 / 45 / 50 / 55 / 60 / 70 / 80 / 90
06430-5161X	06430-5163X	5	M16	25 / 30 / 35 / 40 / 45 / 50 / 55 / 60 / 70 / 80 / 90

Clamp Levers with external thread, steel parts in stainless steel

Order No. Colour black satin finish	Order No. Colour silver metallic	Size	External thread X	L = screw length
06431-1051X	06431-1053X	1	M5	10 / 15 / 20 / 25
06431-1061X	06431-1063X	1	M6	10 / 15 / 20 / 25 / 30 / 40 / 50
06431-2061X	06431-2063X	2	M6	15 / 20 / 25 / 30 / 40 / 50 / 60
06431-2081X	06431-2083X	2	M8	15 / 20 / 25 / 30 / 40 / 50 / 60
06431-2101X	06431-2103X	2	M10	20 / 25 / 30 / 40 / 50 / 60
06431-3081X	06431-3083X	3	M8	20 / 25 / 30 / 40 / 50 / 60
06431-3101X	06431-3103X	3	M10	20 / 25 / 30 / 40 / 50 / 60
06431-4121X	06431-4123X	4	M12	25 / 30 / 40 / 50 / 60
06431-5161X	06431-5163X	5	M16	30 / 40 / 50 / 60

Steel Clamp Levers

with internal thread



Material:
Handle in 1.0503 or in stainless steel 1.4308;
all other steel parts quality class 5.8 or in stainless steel 1.4305

Surface finish:
Handle painted silver-grey with hammertone finish, steel parts black oxide finish;
handle in stainless steel electrolytic-polish, steel parts natural finish

Sample order:
nlm 06440-108

On request:
Other internal threads and special versions.
Dimension „H1“ available in other lengths at extra charge.

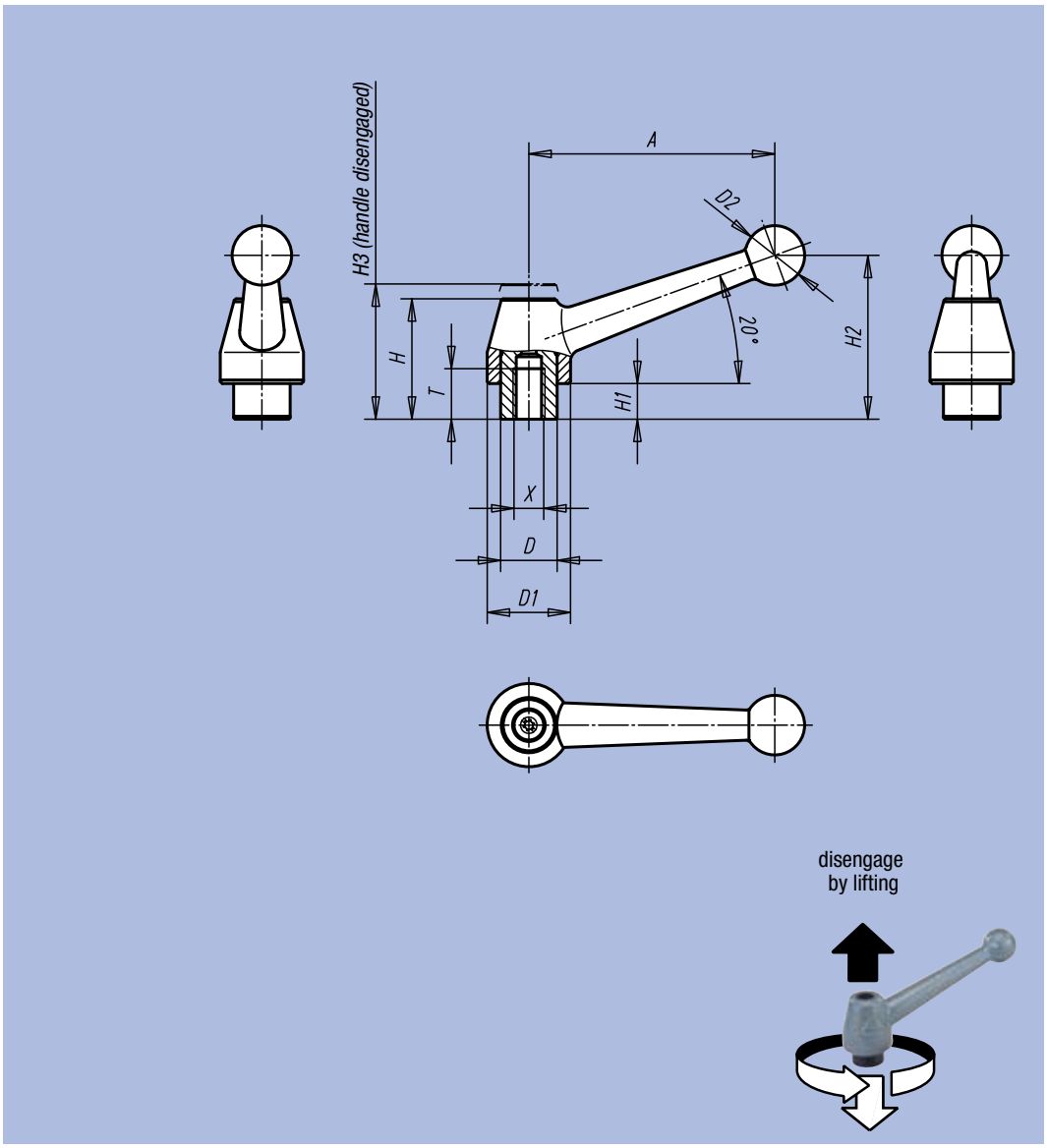

Order No.	Surface finish	Size	Internal thread X	T	D	D1	D2	H	H1	H2	H3	A	No. of teeth	□ kg
06440-108	steel silver-grey	1	M8	17	19	28	20	41	12	54	49	83	24	0,230
06440-110	steel silver-grey	1	M10	17	19	28	20	41	12	54	49	83	24	0,230
06440-112	steel silver-grey	1	M12	17	19	28	20	41	12	54	49	83	24	0,230
06440-212	steel silver-grey	2	M12	23	23	35	25	50	12	69	56	108	26	0,440
06440-216	steel silver-grey	2	M16	23	23	35	25	50	12	69	56	108	26	0,440
06440-316	steel silver-grey	3	M16	27	30	43	30	58,5	12	78	65	132	36	0,730
06440-320	steel silver-grey	3	M20	27	30	43	30	58,5	12	78	65	132	36	0,730
06440-1108	stainless steel electrolytic-polish	1	M8	17	19	28	20	41	12	54	49	83	24	0,230
06440-1110	stainless steel electrolytic-polish	1	M10	17	19	28	20	41	12	54	49	83	24	0,230
06440-1112	stainless steel electrolytic-polish	1	M12	17	19	28	20	41	12	54	49	83	24	0,230

Steel Clamp Levers

with external thread



Material:
Handle in 1.0503 or in stainless steel 1.4308;
all other steel parts quality class 5.8 or in stainless steel 1.4305

Surface finish:
Handle painted silver-grey with hammertone finish, steel parts black oxide finish;
handle in stainless steel electrolytic-polish, steel parts natural finish

Sample order:
nlm 06441-110X30
(please also indicate dimension L)

Note:
Missing dimensions see 06440.

On request:
Other external threads, screw lengths and special versions.
Dimension „H1“ available in other lengths at extra charge.

example:

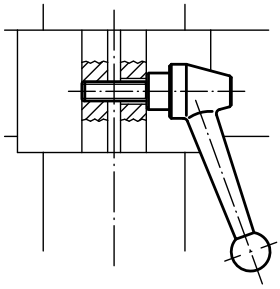

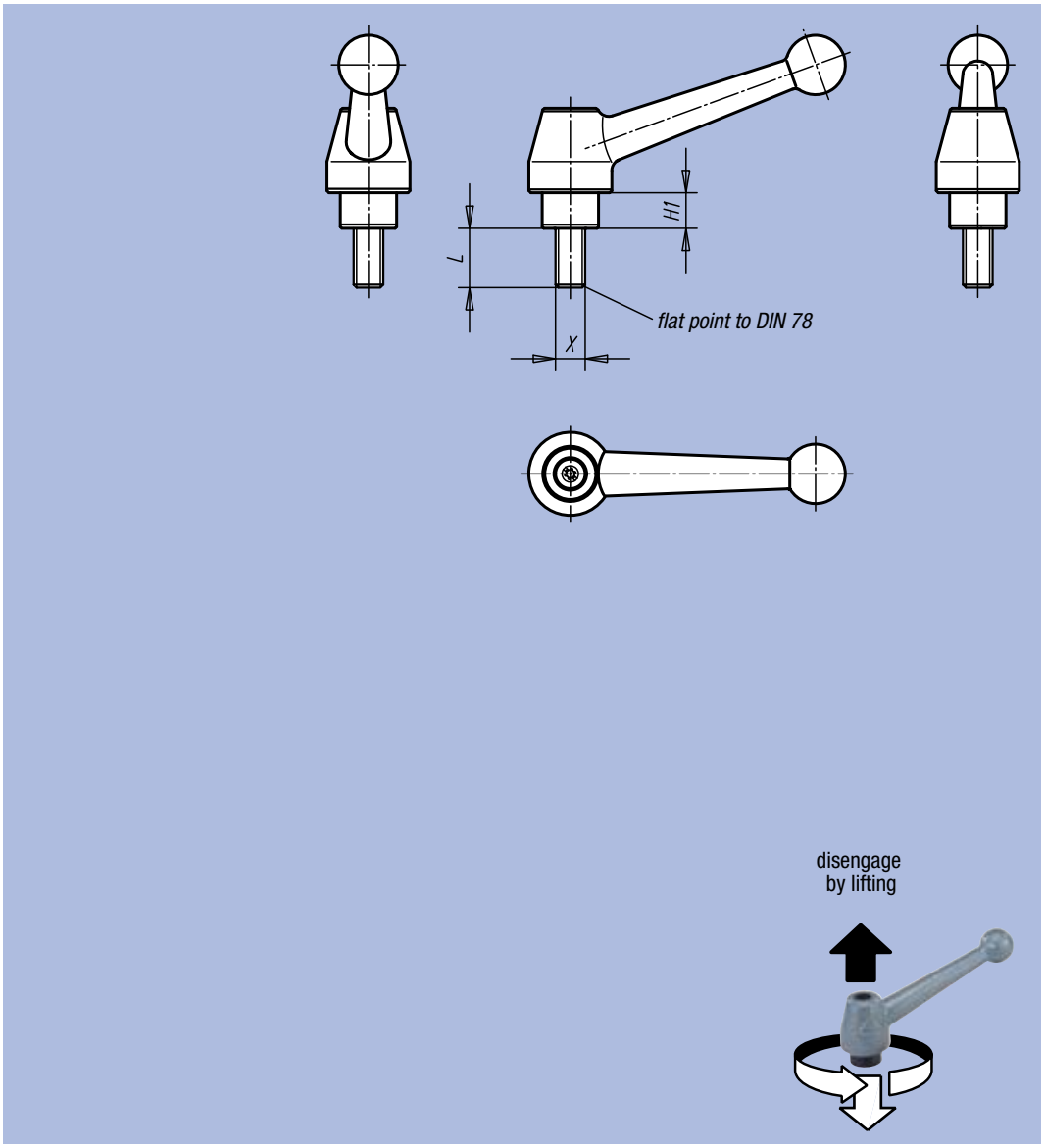

Order No.	Surface finish	Size	External thread X	H1	L = screw length
06441-110X	steel silver-grey	1	M10	12	20 / 25 / 30 / 35 / 40 / 45 / 50 / 55 / 60 / 70 / 80 / 90
06441-112X	steel silver-grey	1	M12	12	20 / 25 / 30 / 35 / 40 / 45 / 50 / 55 / 60 / 70 / 80 / 90
06441-212X	steel silver-grey	2	M12	12	25 / 30 / 35 / 40 / 45 / 50 / 55 / 60 / 70 / 80 / 90
06441-216X	steel silver-grey	2	M16	12	25 / 30 / 35 / 40 / 45 / 50 / 55 / 60 / 70 / 80 / 90
06441-316X	steel silver-grey	3	M16	12	30 / 40 / 50 / 60 / 70 / 80 / 90
06441-320X	steel silver-grey	3	M20	12	30 / 40 / 50 / 60 / 70 / 80 / 90
06441-1110X	stainless steel electrolytic-polish	1	M10	12	25 / 30 / 40 / 50 / 60
06441-1112X	stainless steel electrolytic-polish	1	M12	12	25 / 30 / 40 / 50 / 60

Clamp Levers

with internal thread



Material:
Handle in die cast zinc to DIN 1743, steel parts quality class 5.8

Surface finish:
Handle plastic-coated, steel parts black oxide finish

Sample order:
nlm 06450-1041

Note:
Standard colours are:
black satin finish,
orange RAL 2004.

On request:
Other internal threads, colours and special versions.
Dimension „H1“ available in other lengths at extra charge.

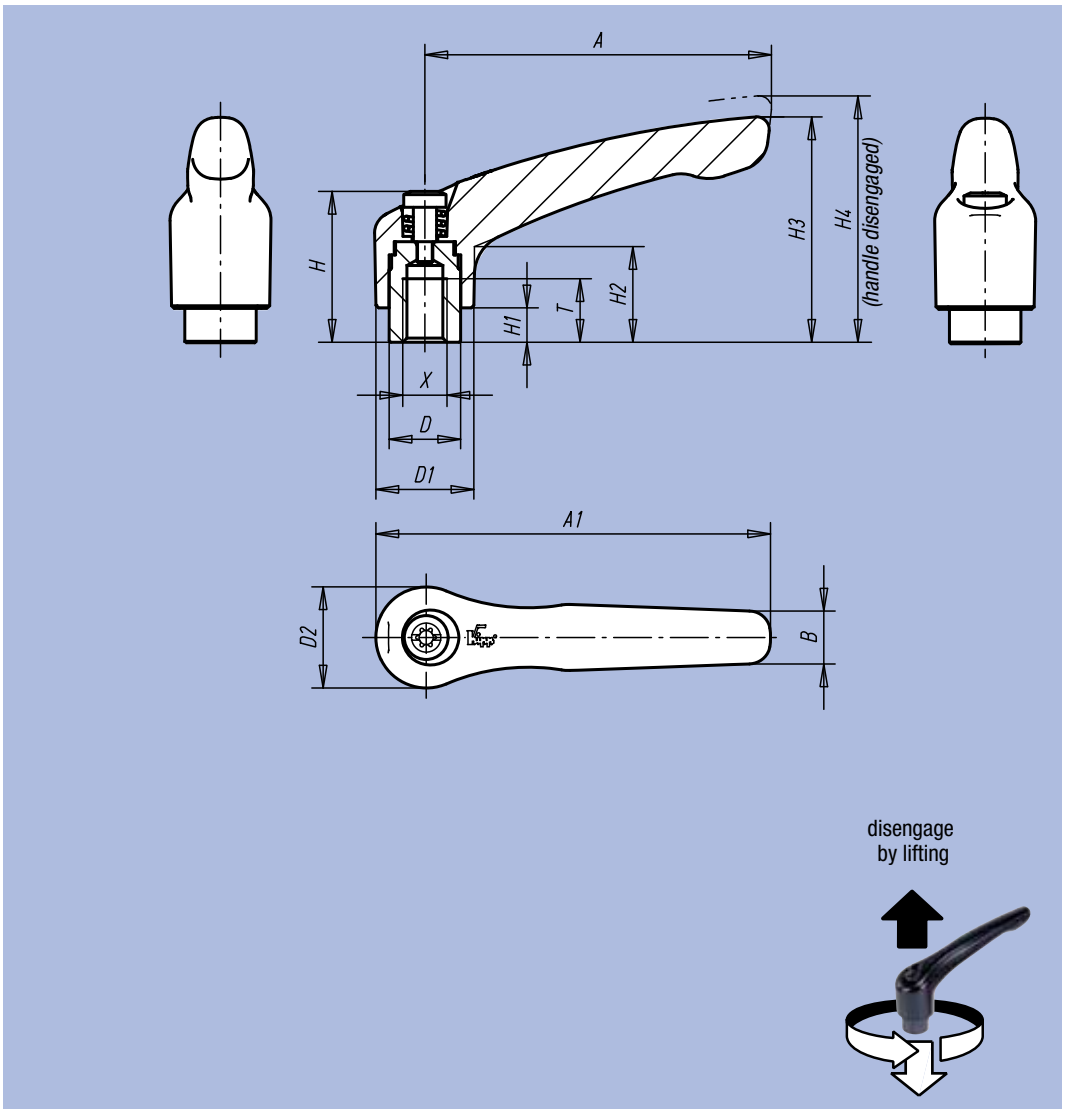

Order No. Colour black satin finish	Order No. Colour orange	Size	Internal thread X	T	D	D1	D2	H	H1	H2	H3	H4	A	A1	B	No. of teeth
06450-0031	06450-0032	0	M3	9	10	13	14	24,5	4	14,5	30	33	30	37	7	16
06450-0041	06450-0042	0	M4	9	10	13	14	24,5	4	14,5	30	33	30	37	7	16
06450-0051	06450-0052	0	M5	9	10	13	14	24,5	4	14,5	30	33	30	37	7	16
06450-1041	06450-1042	1	M4	9	10	13	14	24,5	4	14,5	31	34	40	47	7	16
06450-1051	06450-1052	1	M5	9	10	13	14	24,5	4	14,5	31	34	40	47	7	16
06450-1061	06450-1062	1	M6	9	10	13	14	24,5	4	14,5	31	34	40	47	7	16
06450-2061	06450-2062	2	M6	12	13,5	18,5	19	28,5	6,5	17,5	42,5	45,5	65	74,5	9,5	20
06450-2081	06450-2082	2	M8	12	13,5	18,5	19	28,5	6,5	17,5	42,5	45,5	65	74,5	9,5	20
06450-3081	06450-3082	3	M8	14	16	21	22	37	10	24	54,5	58,5	80	91	11	22
06450-3101	06450-3102	3	M10	14	16	21	22	37	10	24	54,5	58,5	80	91	11	22
06450-4101	06450-4102	4	M10	17	19	27	27,5	43	10	27	63	67,5	95	109	13	24
06450-4121	06450-4122	4	M12	17	19	27	27,5	43	10	27	63	67,5	95	109	13	24
06450-5121	06450-5122	5	M12	23	23	31	32	49	12	31,5	73	77,5	110	126	15	26
06450-5161	06450-5162	5	M16	23	23	31	32	49	12	31,5	73	77,5	110	126	15	26

Clamp Levers

with internal thread, steel parts in stainless steel



Material:
Handle in die cast zinc to DIN 1743, steel parts in stainless steel, 1.4305

Surface finish:
Handle plastic-coated;
steel parts natural finish

Sample order:
nlm 06451-1051

Note:
Standard colours are:
black satin finish, orange RAL 2004.

On request:
Other internal threads, colours and special versions.
Dimension „H1“ available in other lengths at extra charge.

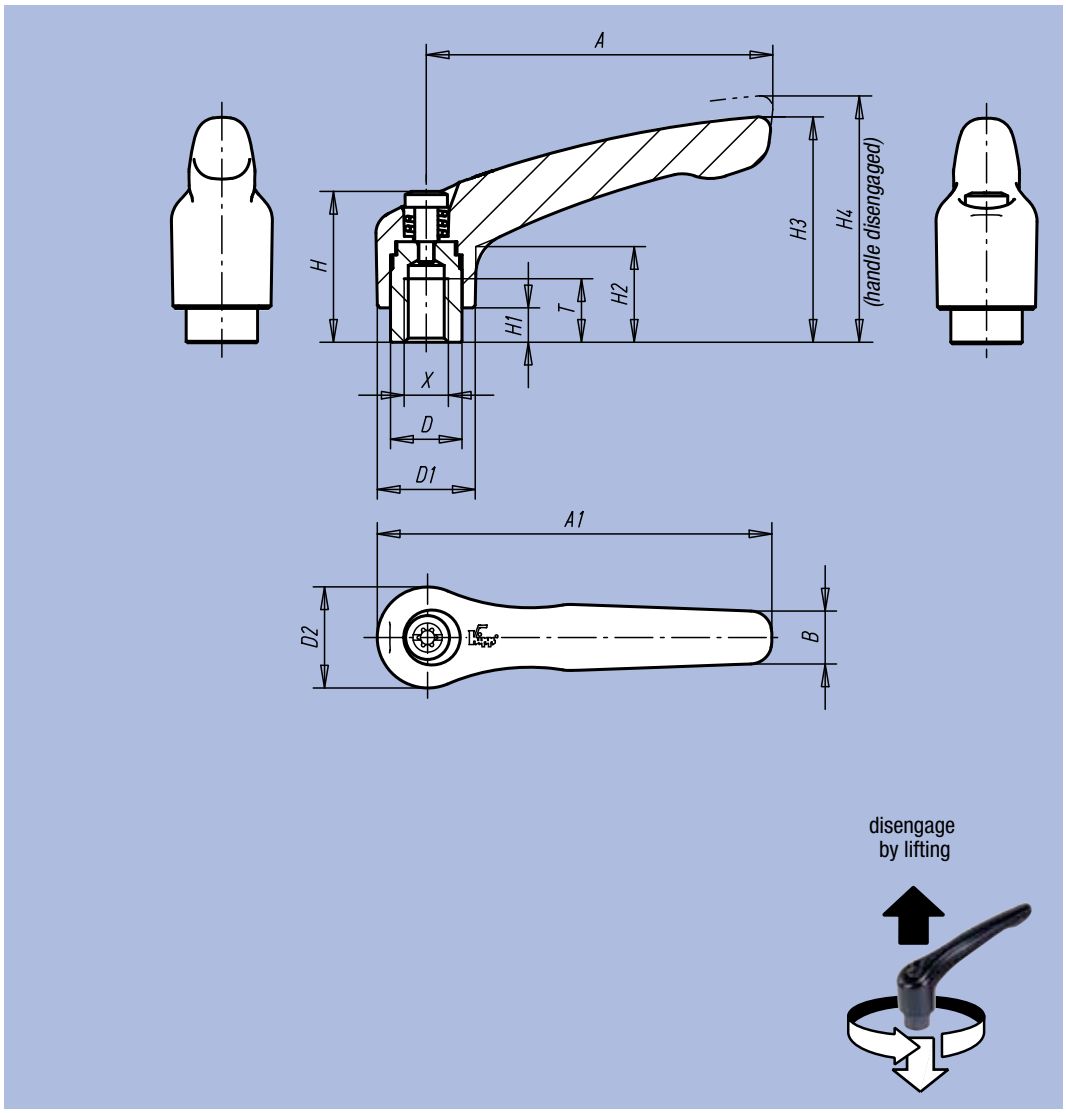

Order No. Colour black satin finish	Order No. Colour orange	Size	Internal thread X	T	D	D1	D2	H	H1	H2	H3	H4	A	A1	B	No. of teeth
06451-0031	06451-0032	0	M3	9	10	13	14	24,5	4	14,5	30	33	30	37	7	16
06451-0041	06451-0042	0	M4	9	10	13	14	24,5	4	14,5	30	33	30	37	7	16
06451-0051	06451-0052	0	M5	9	10	13	14	24,5	4	14,5	30	33	30	37	7	16
06451-1041	06451-1042	1	M4	9	10	13	14	24,5	4	14,5	31	34	40	47	7	16
06451-1051	06451-1052	1	M5	9	10	13	14	24,5	4	14,5	31	34	40	47	7	16
06451-1061	06451-1062	1	M6	9	10	13	14	24,5	4	14,5	31	34	40	47	7	16
06451-2061	06451-2062	2	M6	12	13,5	18,5	19	28,5	6,5	17,5	42,5	45,5	65	74,5	9,5	20
06451-2081	06451-2082	2	M8	12	13,5	18,5	19	28,5	6,5	17,5	42,5	45,5	65	74,5	9,5	20
06451-3081	06451-3082	3	M8	14	16	21	22	37	10	24	54,5	58,5	80	91	11	22
06451-3101	06451-3102	3	M10	14	16	21	22	37	10	24	54,5	58,5	80	91	11	22
06451-4101	06451-4102	4	M10	17	19	27	27,5	43	10	27	63	67,5	95	109	13	24
06451-4121	06451-4122	4	M12	17	19	27	27,5	43	10	27	63	67,5	95	109	13	24
06451-5121	06451-5122	5	M12	23	23	31	32	49	12	31,5	73	77,5	110	126	15	26
06451-5161	06451-5162	5	M16	23	23	31	32	49	12	31,5	73	77,5	110	126	15	26

Clamp Levers in stainless steel

with internal thread



Material:
Handle in precision cast 1.4308,
other steel parts 1.4305

Surface finish:
Handle in stainless steel
electrolytic-polish;
steel parts natural finish

Sample order:
nlm 06454-105

On request:
Other internal threads and special versions.
Dimension „H1“ available in other lengths at extra charge.

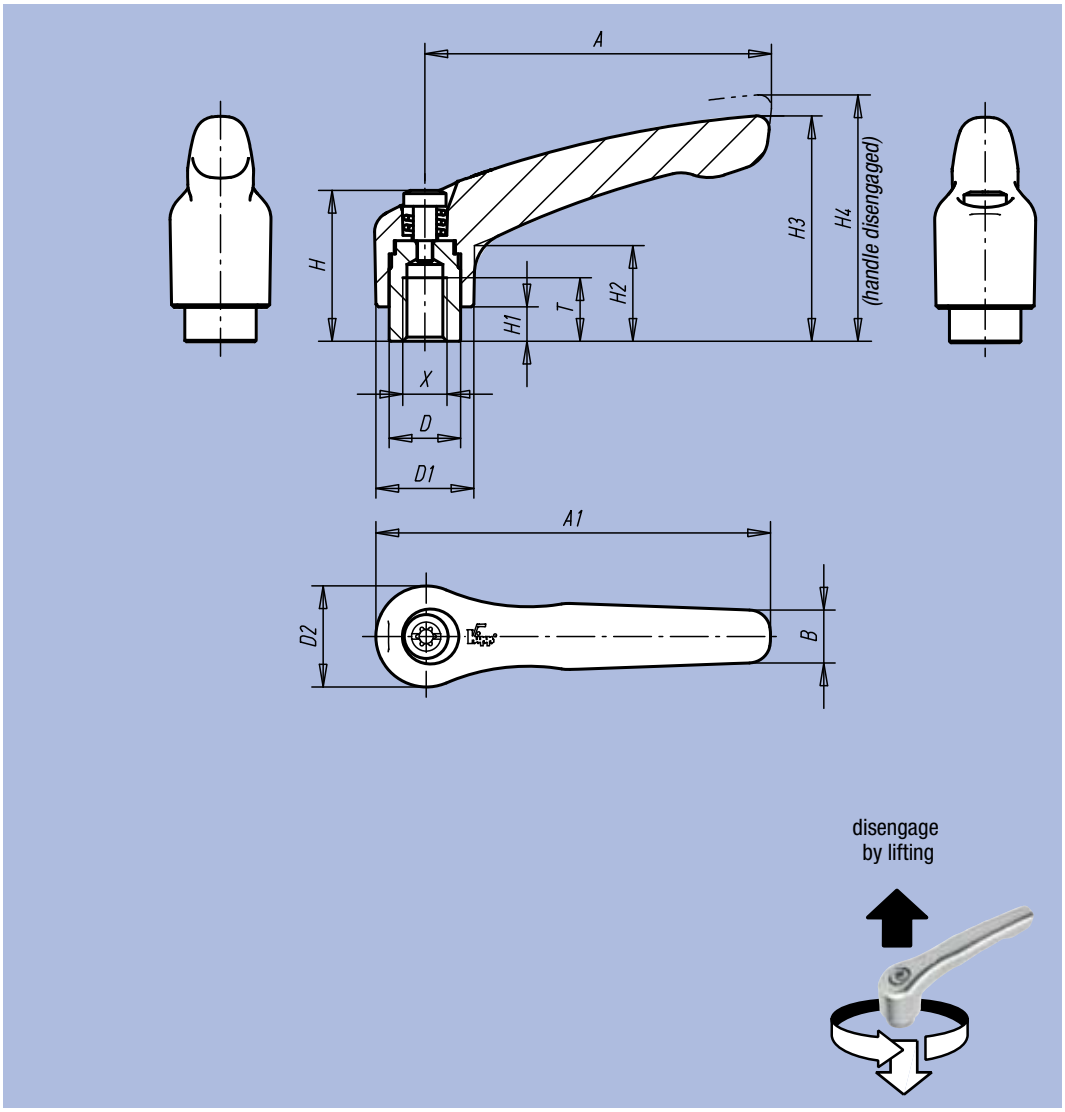

Order No.	Size	Internal thread X	T	D	D1	D2	H	H1	H2	H3	H4	A	A1	B	No. of teeth
06454-104	1	M4	9	10	13	14	24,5	4	14,5	31	34	40	47	7	16
06454-105	1	M5	9	10	13	14	24,5	4	14,5	31	34	40	47	7	16
06454-106	1	M6	9	10	13	14	24,5	4	14,5	31	34	40	47	7	16
06454-206	2	M6	12	13,5	18,5	19	28,5	6,5	17,5	42,5	45,5	65	74,5	10	20
06454-208	2	M8	12	13,5	18,5	19	28,5	6,5	17,5	42,5	45,5	65	74,5	10	20
06454-308	3	M8	14	16	21	22	37	10	24	54,5	58,5	80	91	11	22
06454-310	3	M10	14	16	21	22	37	10	24	54,5	58,5	80	91	11	22
06454-410	4	M10	17	19	27	27,5	43	10	27	63	67,5	95	109	13	24
06454-412	4	M12	17	19	27	27,5	43	10	27	63	67,5	95	109	13	24

Notes:

Clamp Levers

with external thread, steel or stainless steel



Material:
Handle in die cast zinc to DIN 1743;
steel parts quality class 5.8 or
steel parts in stainless steel 1.4305

Surface finish:
Handle plastic-coated;
steel black oxide finish;
stainless steel natural finish

Sample order:
nlm 06460-1051X25
(please also indicate dimension L)

Note:
Standard colours are:
black satin finish, orange RAL 2004.

On request:
Other external threads, screw lengths, colours and special versions.
Dimension „H1“ available in other lengths at extra charge.

Thread:
The external screw threads are persistent up to 60 mm.
From 70 mm screw length, the threads are only 60 mm long.

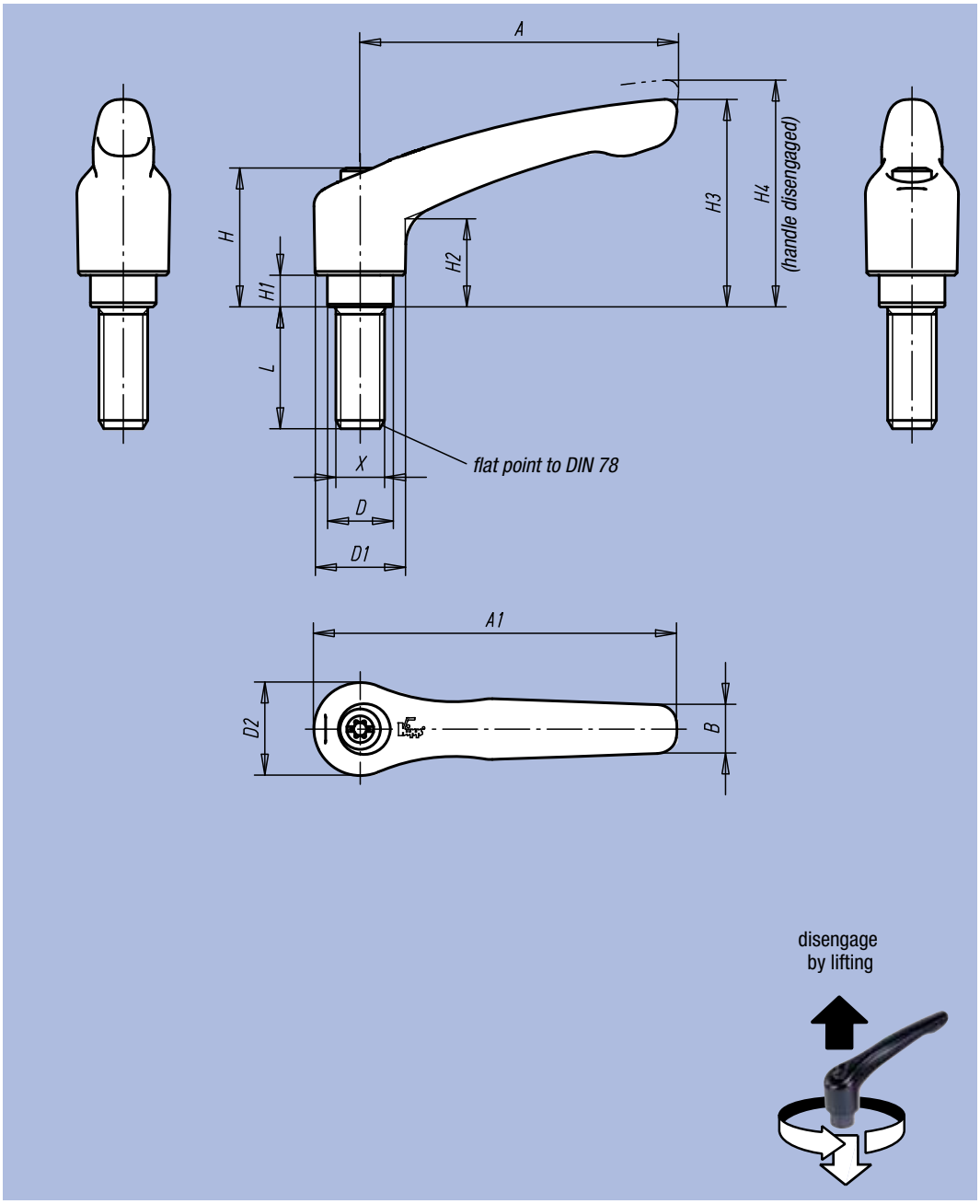

Clamp Levers

with external thread, steel or stainless steel

Technical data

Size	External thread X	D	D1	D2	H	H1	H2	H3	H4	A	A1	B	No. of teeth
0	M4	10	13	14	24,5	4	14,5	30	33	30	37	7	16
0	M5	10	13	14	24,5	4	14,5	30	33	30	37	7	16
1	M5	10	13	14	24,5	4	14,5	31	34	40	47	7	16
1	M6	10	13	14	24,5	4	14,5	31	34	40	47	7	16
2	M6	13,5	18,5	19	28,5	6,5	17,5	42,5	45,5	65	74,5	9,5	20
2	M8	13,5	18,5	19	28,5	6,5	17,5	42,5	45,5	65	74,5	9,5	20
2	M10	13,5	18,5	19	28,5	6,5	17,5	42,5	45,5	65	74,5	9,5	20
3	M8	16	21	22	37	10	24	54,5	58,5	80	91	11	22
3	M10	16	21	22	37	10	24	54,5	58,5	80	91	11	22
4	M10	19	27	27,5	43	10	27	63	67,5	95	109	13	24
4	M12	19	27	27,5	43	10	27	63	67,5	95	109	13	24
5	M12	23	31	32	49	12	31,5	73	77,5	110	126	15	26
5	M16	23	31	32	49	12	31,5	73	77,5	110	126	15	26

Clamp Levers with external thread, steel parts in steel

Order No. Colour black satin finish	Order No. Colour orange	Size	External thread X	L = screw length
06460-0041X	06460-0042X	0	M4	10 / 15 / 20 / 25 / 30 / 35 / 40 / 45 / 50
06460-0051X	06460-0052X	0	M5	10 / 15 / 20 / 25 / 30 / 35 / 40 / 45 / 50
06460-1051X	06460-1052X	1	M5	10 / 15 / 20 / 25 / 30 / 35 / 40 / 45 / 50
06460-1061X	06460-1062X	1	M6	10 / 15 / 20 / 25 / 30 / 35 / 40 / 45 / 50
06460-2061X	06460-2062X	2	M6	15 / 20 / 25 / 30 / 35 / 40 / 45 / 50 / 55 / 60
06460-2081X	06460-2082X	2	M8	15 / 20 / 25 / 30 / 35 / 40 / 45 / 50 / 55 / 60
06460-2101X	06460-2102X	2	M10	15 / 20 / 25 / 30 / 35 / 40 / 45 / 50 / 55 / 60
06460-3081X	06460-3082X	3	M8	15 / 20 / 25 / 30 / 35 / 40 / 45 / 50 / 55 / 60
06460-3101X	06460-3102X	3	M10	15 / 20 / 25 / 30 / 35 / 40 / 45 / 50 / 55 / 60
06460-4101X	06460-4102X	4	M10	20 / 25 / 30 / 35 / 40 / 45 / 50 / 55 / 60 / 70 / 80 / 90
06460-4121X	06460-4122X	4	M12	20 / 25 / 30 / 35 / 40 / 45 / 50 / 55 / 60 / 70 / 80 / 90
06460-5121X	06460-5122X	5	M12	25 / 30 / 35 / 40 / 45 / 50 / 55 / 60 / 70 / 80 / 90
06460-5161X	06460-5162X	5	M16	25 / 30 / 35 / 40 / 45 / 50 / 55 / 60 / 70 / 80 / 90

Clamp Levers with external thread, steel parts in stainless steel

Order No. Colour black satin finish	Order No. Colour orange	Size	External thread X	L = screw length
06461-0041X	06461-0042X	0	M4	10 / 15 / 20 / 25
06461-0051X	06461-0052X	0	M5	10 / 15 / 20 / 25
06461-1051X	06461-1052X	1	M5	10 / 15 / 20 / 25
06461-1061X	06461-1062X	1	M6	10 / 15 / 20 / 25 / 30 / 40 / 50
06461-2061X	06461-2062X	2	M6	15 / 20 / 25 / 30 / 40 / 50 / 60
06461-2081X	06461-2082X	2	M8	15 / 20 / 25 / 30 / 40 / 50 / 60
06461-2101X	06461-2102X	2	M10	20 / 25 / 30 / 40 / 50 / 60
06461-3081X	06461-3082X	3	M8	20 / 25 / 30 / 40 / 50 / 60
06461-3101X	06461-3102X	3	M10	20 / 25 / 30 / 40 / 50 / 60
06461-4121X	06461-4122X	4	M12	25 / 30 / 40 / 50 / 60
06461-5161X	06461-5162X	5	M16	30 / 40 / 50 / 60

Clamp Levers in stainless steel

with external thread



Material:
Handle in precision cast 1.4308,
other steel parts 1.4305

Surface finish:
Handle in stainless steel
electrolytic-polish;
steel parts natural finish

Sample order:
nlm 06464-105X10
(please also indicate dimension L)

On request:
Other external threads, screw lengths and special versions.
Dimension „H1“ available in other lengths at extra charge.

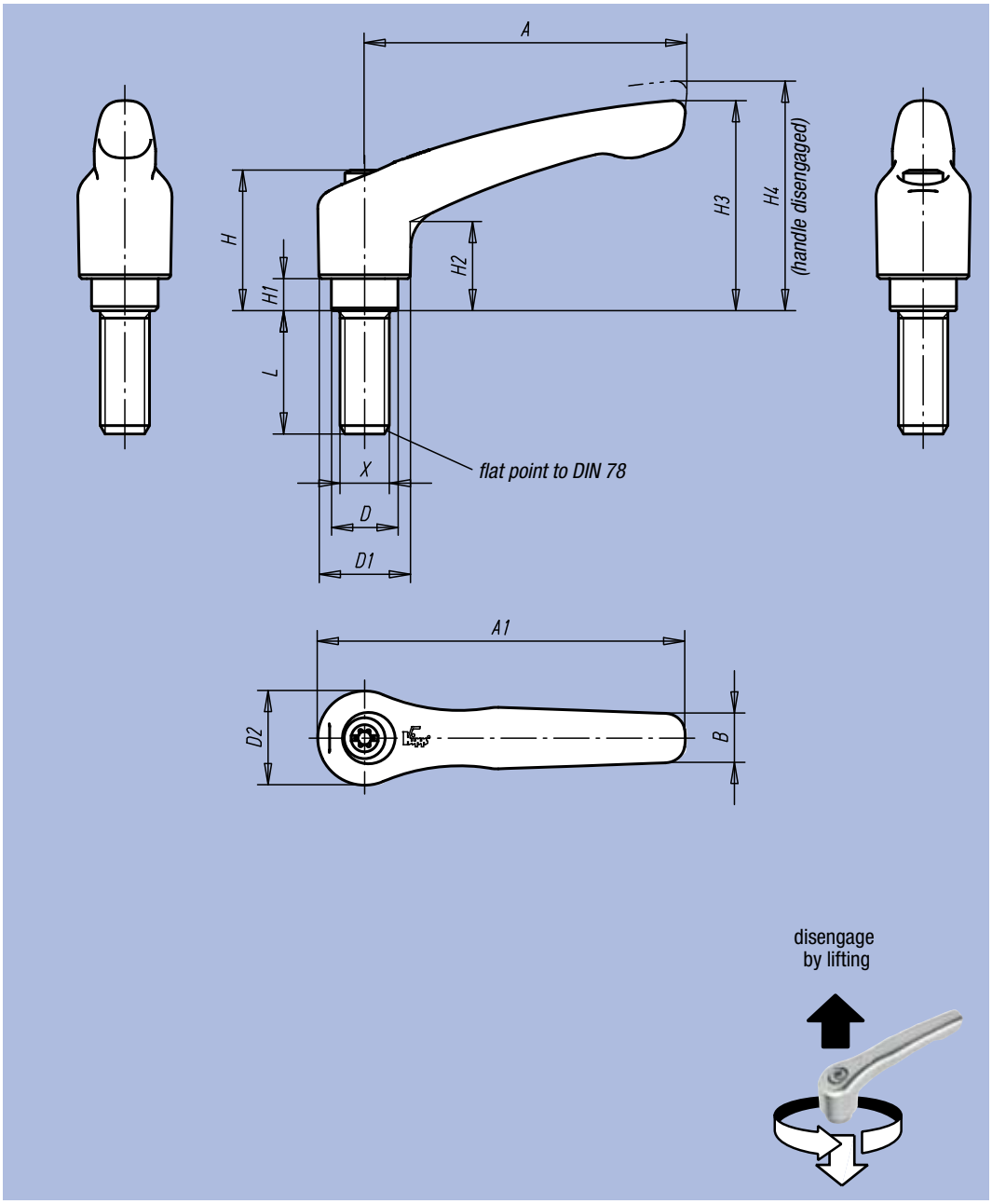

Order No.	Size	External thread X	D	D1	D2	H	H1	H2	H3	H4	A	A1	B	No. of teeth	L = screw length
06464-105X	1	M5	10	13	14	24,5	4	14,5	31	34	40	47	7	16	10 / 15 / 20 / 25
06464-106X	1	M6	10	13	14	24,5	4	14,5	31	34	40	47	7	16	10 / 15 / 20 / 25 / 30 / 40 / 50
06464-206X	2	M6	13,5	18,5	19	28,5	6,5	17,5	42,5	45,5	65	74,5	10	20	15 / 20 / 25 / 30 / 40 / 50 / 60
06464-208X	2	M8	13,5	18,5	19	28,5	6,5	17,5	42,5	45,5	65	74,5	10	20	15 / 20 / 25 / 30 / 40 / 50 / 60
06464-210X	2	M10	13,5	18,5	19	28,5	6,5	17,5	42,5	45,5	65	74,5	10	20	20 / 25 / 30 / 40 / 50 / 60
06464-308X	3	M8	16	21	22	37	10	24	54,5	58,5	80	91	11	22	20 / 25 / 30 / 40 / 50 / 60
06464-310X	3	M10	16	21	22	37	10	24	54,5	58,5	80	91	11	22	20 / 25 / 30 / 40 / 50 / 60
06464-412X	4	M12	19	27	27,5	43	10	27	63	67,5	95	109	13	24	25 / 30 / 40 / 50 / 60

Notes:

Ratchet Levers



Material:
Housing in tempered steel;
tension nut and tension pin in case-hardened free-cutting steel

Surface finish:
Black oxide finish; matt-finished or high-polish chromium-plated versions available at extra charge

Sample order:
nlm 06470-316, special model: Tension Pin B

Note:
Tension Pin A standard model (for ratchet action):
Use for clamping and releasing in limited space and when considerable travel is involved. In order to change the tightening direction, the handle must be reversed by 180°.

Tension Pin B special model:
Use for clamping and releasing in limited space and when short travel is involved. The handle is not reversed in order to change the tightening direction. It must be pulled out before it can be engaged in the next slot.

On request:
Other internal threads, locating holes and square sockets.
Dimension „E“ available in other lengths at extra charge.

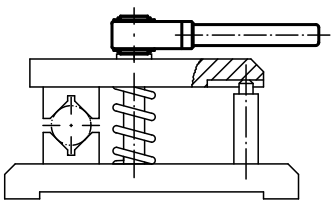

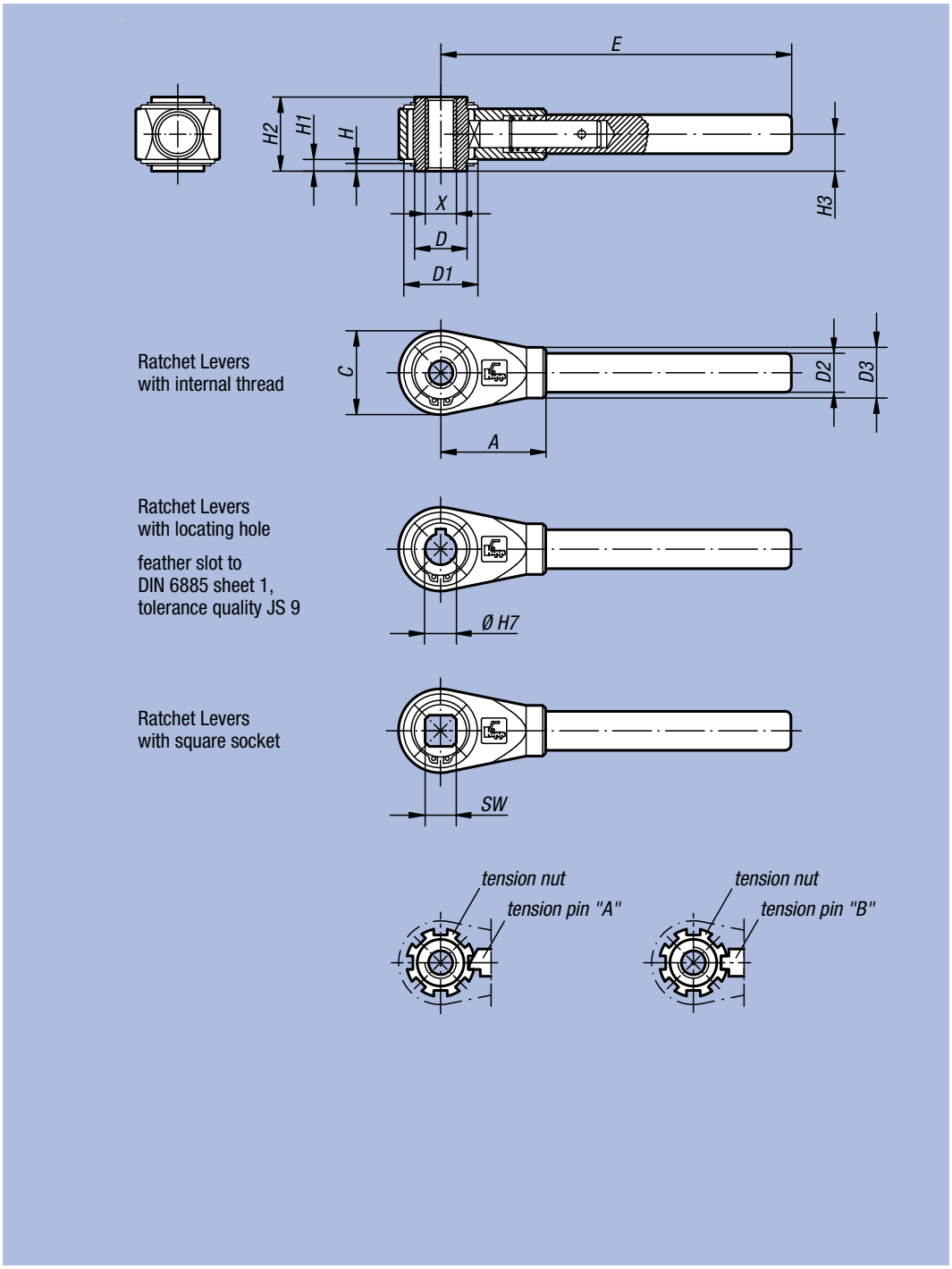

Ratchet Levers

Order No. Internal thread	Surface finish	Size	Internal thread X	D	D1	D2	D3	H	H1	H2	H3	C	A	E	No. of locking slots
06470-310	tension pin A	1	M10	22	33	17	22	3	4,5	31	15,5	36	48	150	7
06470-312	tension pin A	1	M12	22	33	17	22	3	4,5	31	15,5	36	48	150	7
06470-314	tension pin A	2	M14	27	38	20	26	4	6	38	19	43	54	180	8
06470-316	tension pin A	2	M16	27	38	20	26	4	6	38	19	43	54	180	8
06470-318	tension pin A	3	M18	35	45	24	30	4	6	42	21	51	70	230	8
06470-320	tension pin A	3	M20	35	45	24	30	4	6	42	21	51	70	230	8
06470-322	tension pin A	4	M22	42	56	28	35	4	6	47	23,5	61	80	300	9
06470-324	tension pin A	4	M24	42	56	28	35	4	6	47	23,5	61	80	300	9
06470-327	tension pin A	4	M27	42	56	28	35	4	6	47	23,5	61	80	300	9
06470-330	tension pin A	5	M30	60	75	32	38	5	7,5	53	26,5	82	110	400	11
06470-336	tension pin A	5	M36	60	75	32	38	5	7,5	53	26,5	82	110	400	11
06470-342	tension pin A	5	M42	60	75	32	38	5	7,5	53	26,5	82	110	400	11

Order No. Locating hole	Surface finish	Size	Locating hole dia. H7 with feather slot to DIN 6885 sheet 1	D	D1	D2	D3	H	H1	H2	H3	C	A	E	No. of locking slots
06470-412	tension pin A	1	12	22	33	17	22	3	4,5	31	15,5	36	48	150	7
06470-414	tension pin A	2	14	27	38	20	26	4	6	38	19	43	54	180	8
06470-415	tension pin A	2	15	27	38	20	26	4	6	38	19	43	54	180	8
06470-416	tension pin A	2	16	27	38	20	26	4	6	38	19	43	54	180	8
06470-418	tension pin A	3	18	35	45	24	30	4	6	42	21	51	70	230	8
06470-420	tension pin A	3	20	35	45	24	30	4	6	42	21	51	70	230	8
06470-422	tension pin A	4	22	42	56	28	35	4	6	47	23,5	61	80	300	9
06470-425	tension pin A	4	25	42	56	28	35	4	6	47	23,5	61	80	300	9
06470-427	tension pin A	4	27	42	56	28	35	4	6	47	23,5	61	80	300	9
06470-430	tension pin A	5	30	60	75	32	38	5	7,5	53	26,5	82	110	400	11
06470-436	tension pin A	5	36	60	75	32	38	5	7,5	53	26,5	82	110	400	11

Order No. Square socket	Surface finish	Size	Square socket SW	D	D1	D2	D3	H	H1	H2	H3	C	A	E	No. of locking slots
06470-510	tension pin A	1	10	22	33	17	22	3	4,5	31	15,5	36	48	150	7
06470-512	tension pin A	1	12	22	33	17	22	3	4,5	31	15,5	36	48	150	7
06470-513	tension pin A	2	13	27	38	20	26	4	6	38	19	43	54	180	8
06470-514	tension pin A	2	14	27	38	20	26	4	6	38	19	43	54	180	8
06470-517	tension pin A	3	17	35	45	24	30	4	6	42	21	51	70	230	8
06470-519	tension pin A	4	19	42	56	28	35	4	6	47	23,5	61	80	300	9
06470-520	tension pin A	4	20	42	56	28	35	4	6	47	23,5	61	80	300	9
06470-522	tension pin A	4	22	42	56	28	35	4	6	47	23,5	61	80	300	9
06470-524	tension pin A	4	24	42	56	28	35	4	6	47	23,5	61	80	300	9
06470-530	tension pin A	5	30	60	75	32	38	5	7,5	53	26,5	82	110	400	11
06470-532	tension pin A	5	32	60	75	32	38	5	7,5	53	26,5	82	110	400	11

Offset Crank Handles

similar to DIN 468



Material:
Malleable or ductile cast iron crank arm

Surface finish:
Blasted

Sample order:
nlm 06480-212X14

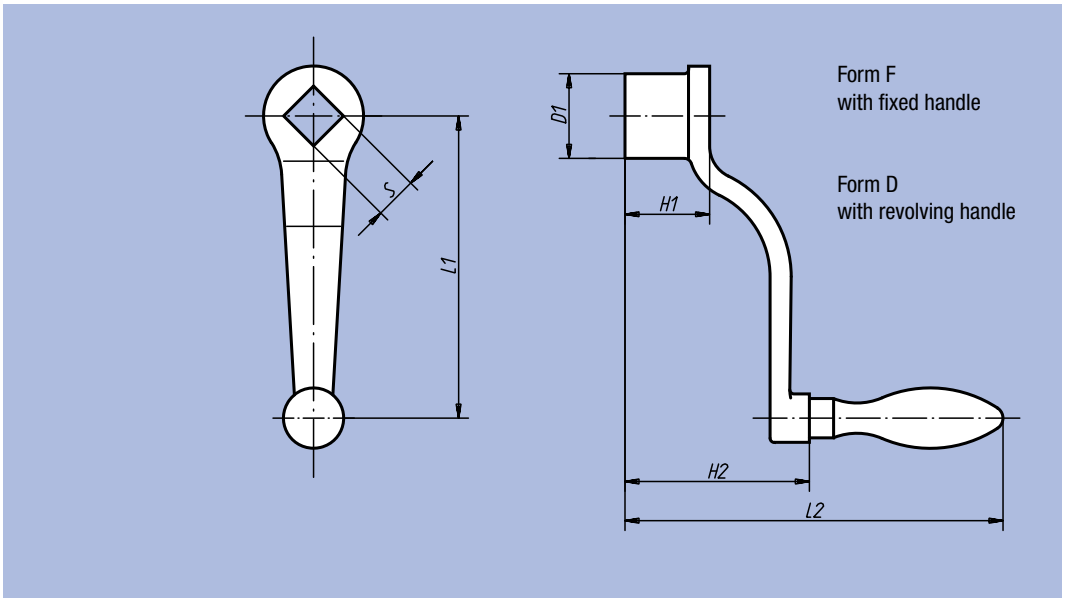

Order No.	Form	L1	L2	S	D1	H1	H2	Diameter handle	kg
06480-106X10	F	63	92	10 +0,2	20	20	40	16	0,130
06480-108X10	F	80	109	10 +0,2	24	24	44	20	0,245
06480-108X12	F	80	109	12 +0,2	24	24	44	20	0,245
06480-110X12	F	100	120	12 +0,2	28	28	55	20	0,330
06480-110X14	F	100	120	14 +0,3	28	28	55	20	0,330
06480-112X14	F	125	141	14 +0,3	34	34	58	25	0,550
06480-112X17	F	125	141	17 +0,3	34	34	58	25	0,550
06480-116X17	F	160	153	17 +0,3	37	38	70	25	0,710
06480-116X19	F	160	153	19 +0,3	37	38	70	25	0,710
06480-120X19	F	200	189	19 +0,3	40	44	84	32	1,120
06480-120X22	F	200	189	22 +0,3	40	44	84	32	1,120
06480-206X10	D	63	92	10 +0,2	20	20	40	16	0,130
06480-208X10	D	80	109	10 +0,2	24	24	44	20	0,245
06480-208X12	D	80	109	12 +0,2	24	24	44	20	0,245
06480-210X12	D	100	120	12 +0,2	28	28	55	20	0,330
06480-210X14	D	100	120	14 +0,3	28	28	55	20	0,330
06480-212X14	D	125	141	14 +0,3	34	34	58	25	0,550
06480-212X17	D	125	141	17 +0,3	34	34	58	25	0,550
06480-216X17	D	160	153	17 +0,3	37	38	70	25	0,710
06480-216X19	D	160	153	19 +0,3	37	38	70	25	0,710
06480-220X19	D	200	189	19 +0,3	40	44	84	32	1,120
06480-220X22	D	200	189	22 +0,3	40	44	84	32	1,120

Straight Crank Handles

similar to DIN 469



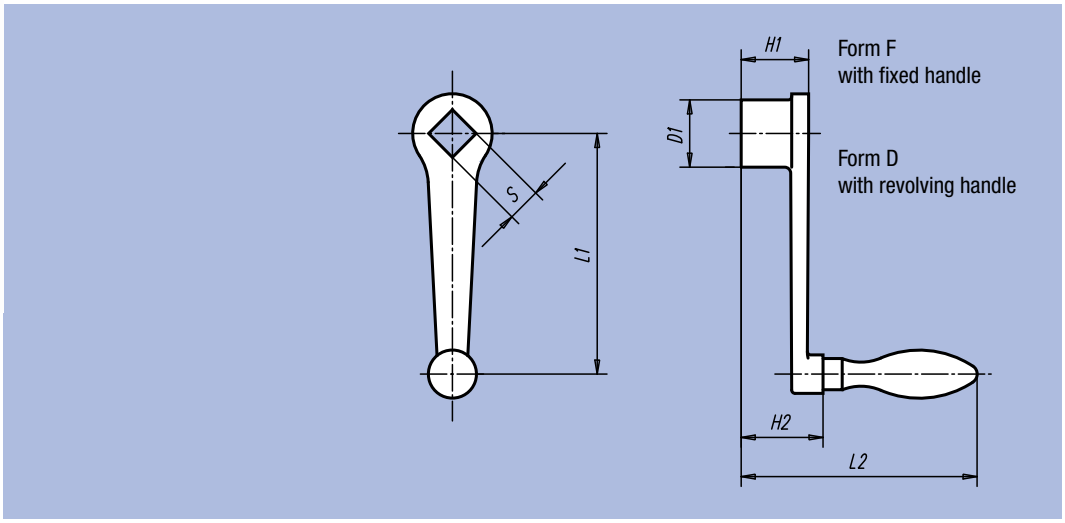

Material:
Malleable or ductile cast iron crank arm

Surface finish:
Blasted

Sample order:
nlm 06490-120X22

Order No.	Form	L1	L2	S	D1	H1	H2	Diameter handle	kg
06490-106X10	F	63	80	10 +0,2	20	20	28	16	0,135
06490-108X10	F	80	98	10 +0,2	24	24	33	20	0,250
06490-108X12	F	80	98	12 +0,2	24	24	33	20	0,250
06490-110X12	F	100	102	12 +0,2	28	28	37	20	0,330
06490-110X14	F	100	102	14 +0,3	28	28	37	20	0,330
06490-112X14	F	125	120	14 +0,3	34	34	40	25	0,550
06490-112X17	F	125	120	17 +0,3	34	34	40	25	0,550
06490-116X17	F	160	131	17 +0,3	37	38	48	25	0,720
06490-116X19	F	160	131	19 +0,3	37	38	48	25	0,720
06490-120X19	F	200	158	19 +0,3	40	44	53	32	1,140
06490-120X22	F	200	158	22 +0,3	40	44	53	32	1,140
06490-206X10	D	63	80	10 +0,2	20	20	28	16	0,135
06490-208X10	D	80	98	10 +0,2	24	24	33	20	0,250
06490-208X12	D	80	98	12 +0,2	24	24	33	20	0,250
06490-210X12	D	100	102	12 +0,2	28	28	37	20	0,330
06490-210X14	D	100	102	14 +0,3	28	28	37	20	0,330
06490-212X14	D	125	120	14 +0,3	34	34	40	25	0,550
06490-212X17	D	125	120	17 +0,3	34	34	40	25	0,550
06490-216X17	D	160	131	17 +0,3	37	38	48	25	0,720
06490-216X19	D	160	131	19 +0,3	37	38	48	25	0,720
06490-220X19	D	200	158	19 +0,3	40	44	53	32	1,140
06490-220X22	D	200	158	22 +0,3	40	44	53	32	1,140

Aluminium Crank Handles



Material:
Aluminium;
duroplastic cylindrical revolving handle

Surface finish:
Black plastic-coated,
black Revolving Handle

Sample order:
nlm 06492-100

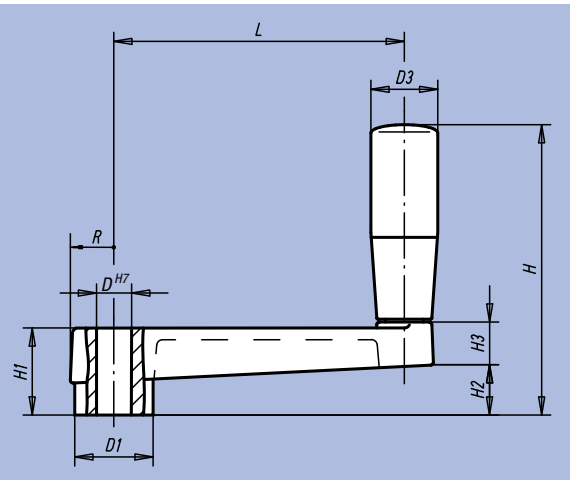

Order No.	D	D1	D3	H	H1	~H2	H3	L	R	kg
06492-100	10	23	21	81	24	14	14	80	13	0,101
06492-120	12	27	23	100	28	17	15	100	15	0,170
06492-140	14	32	26	123	34	22	18	125	17,5	0,262

Notes:

Crank Handles

with cylindrical fold-away grip



Material, surface finish:
Anthracite grey thermoplastic,
steel parts black oxide finish

Sample order:
nlm 06500-1108

Note:
The hub cover is supplied unassembled.
The Crank Handles can be secured axially to the shaft via feather connection by cross-pinning or with a socket head screw to DIN 6912 and a washer to DIN 7349.

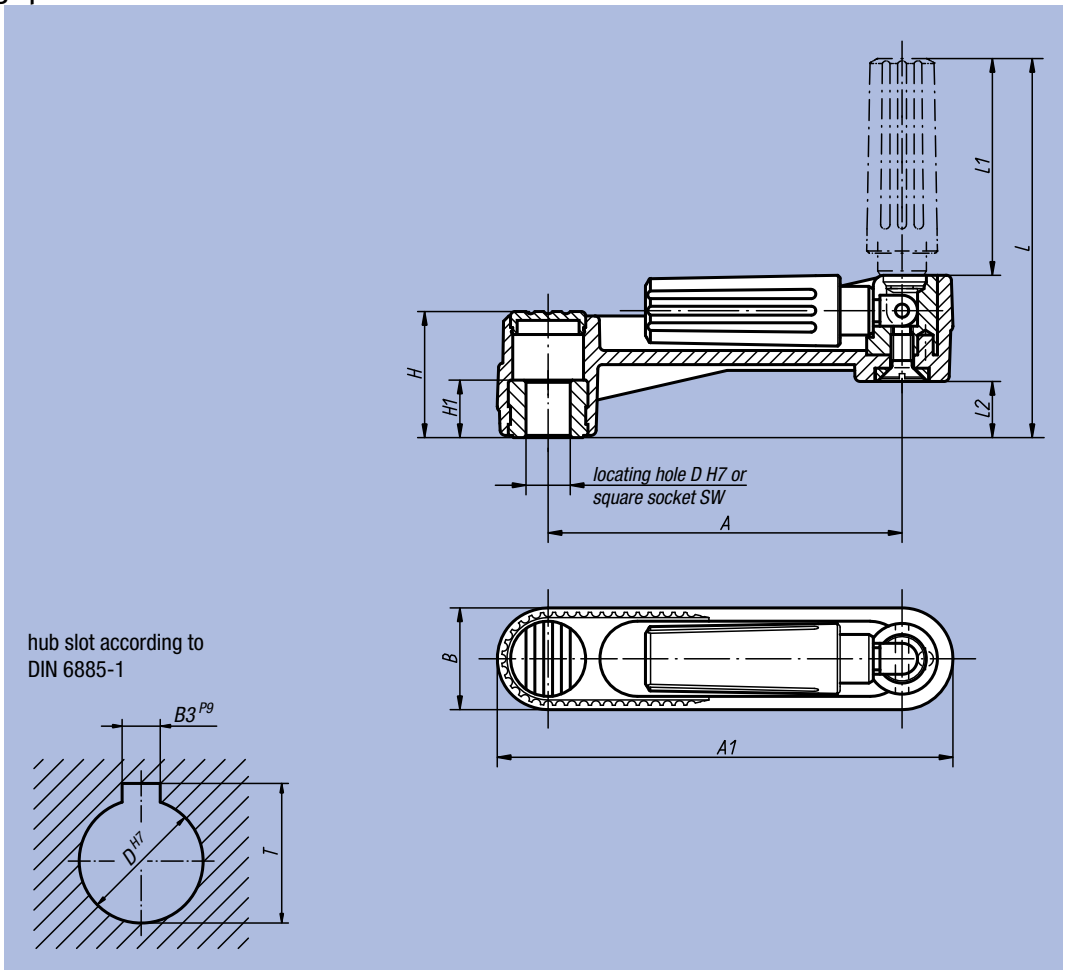

Order No.	Surface finish	Size	A	A1	B	D	H	H1	L	L1	L2	kg
06500-1108	locating hole without slot	1	80	104	24	8	29	13	85,5	49	13	0,100
06500-1110	locating hole without slot	1	80	104	24	10	29	13	85,5	49	13	0,100
06500-1210	locating hole without slot	2	100	129	29	10	36	13	105	59,5	16	0,190
06500-1212	locating hole without slot	2	100	129	29	12	36	13	105	59,5	16	0,190
06500-1312	locating hole without slot	3	125	161	36	12	44	18,5	140	83,5	19,5	0,370
06500-1314	locating hole without slot	3	125	161	36	14	44	18,5	140	83,5	19,5	0,370

Order No.	Surface finish	Size	A	A1	B	D	H	H1	L	L1	L2	B3	T	kg
06500-110802	locating hole with slot	1	80	104	24	8	29	13	85,5	49	13	2	9	0,100
06500-111003	locating hole with slot	1	80	104	24	10	29	13	85,5	49	13	3	11,4	0,100
06500-121003	locating hole with slot	2	100	129	29	10	36	13	105	59,5	16	3	11,4	0,190
06500-121204	locating hole with slot	2	100	129	29	12	36	13	105	59,5	16	4	13,8	0,190
06500-131204	locating hole with slot	3	125	161	36	12	44	18,5	140	83,5	19,5	4	13,8	0,370
06500-131405	locating hole with slot	3	125	161	36	14	44	18,5	140	83,5	19,5	5	16,3	0,370

Order No.	Surface finish	Size	A	A1	B	SW	H	H1	L	L1	L2	kg
06500-2108	square socket	1	80	104	24	8	29	13	85,5	49	13	0,100
06500-2110	square socket	1	80	104	24	10	29	13	85,5	49	13	0,100
06500-2210	square socket	2	100	129	29	10	36	13	105	59,5	16	0,190
06500-2212	square socket	2	100	129	29	12	36	13	105	59,5	16	0,190
06500-2312	square socket	3	125	161	36	12	44	18,5	140	83,5	19,5	0,370
06500-2314	square socket	3	125	161	36	14	44	18,5	140	83,5	19,5	0,370

Crank Handles

with cylindrical revolving grip



Material, surface finish:
Anthracite grey thermoplastic,
steel parts black oxide finish

Sample order:
nlm 06500-3108

Note:
The hub cover and the Cylindrical Revolving Grip are supplied unassembled. In order to assemble the grip, the axis must be screwed into the receiving hole.
The Crank Handles can be secured axially to the shaft via feather connection by cross-pinning or with a socket head screw to DIN 6912 and a washer to DIN 7349.

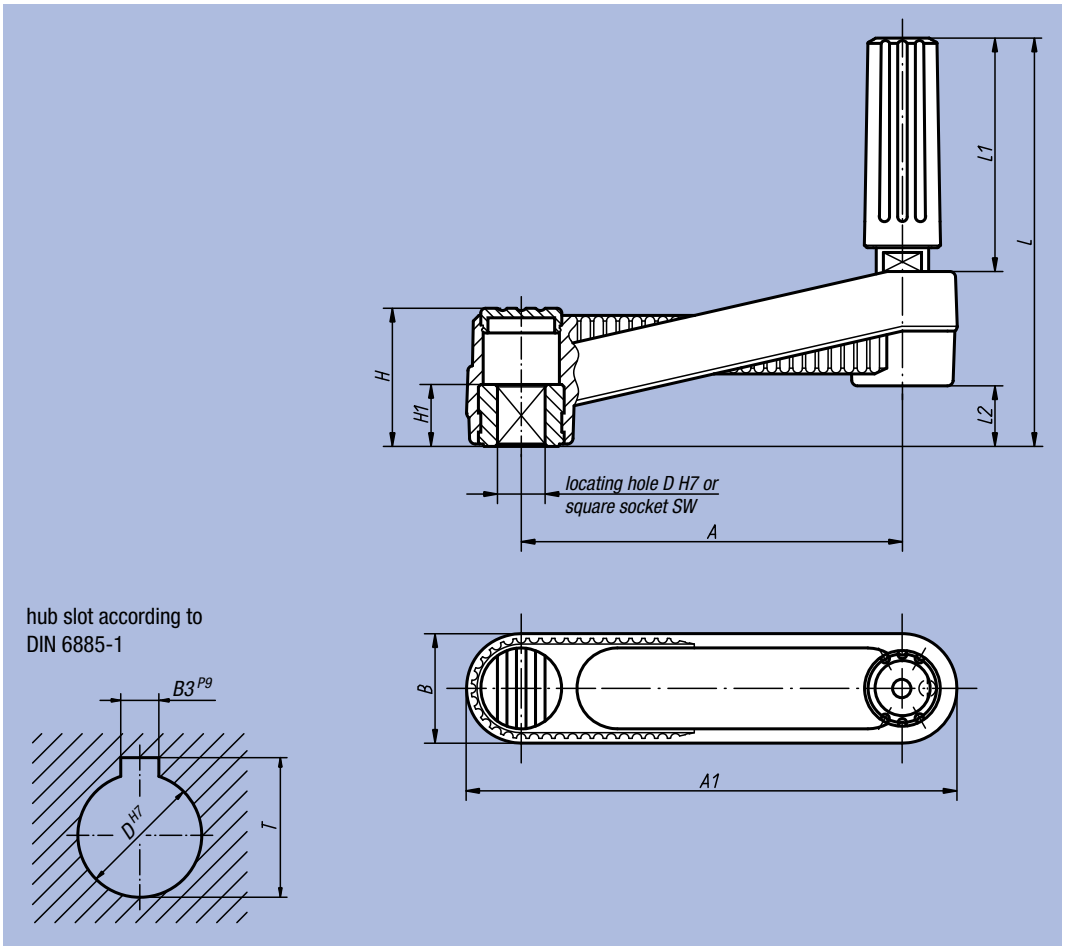

Order No.	Surface finish	Size	A	A1	B	D	H	H1	L	L1	L2	kg
06500-3108	locating hole without slot	1	80	104	24	8	29	13	85,5	49	13	0,110
06500-3110	locating hole without slot	1	80	104	24	10	29	13	85,5	49	13	0,110
06500-3210	locating hole without slot	2	100	129	29	10	36	13	105	59,5	16	0,210
06500-3212	locating hole without slot	2	100	129	29	12	36	13	105	59,5	16	0,210
06500-3312	locating hole without slot	3	125	161	36	12	44	18,5	140	83,5	19,5	0,405
06500-3314	locating hole without slot	3	125	161	36	14	44	18,5	140	83,5	19,5	0,405

Order No.	Surface finish	Size	A	A1	B	D	H	H1	L	L1	L2	B3	T	kg
06500-310802	locating hole with slot	1	80	104	24	8	29	13	85,5	49	13	2	9	0,110
06500-311003	locating hole with slot	1	80	104	24	10	29	13	85,5	49	13	3	11,4	0,110
06500-321003	locating hole with slot	2	100	129	29	10	36	13	105	59,5	16	3	11,4	0,210
06500-321204	locating hole with slot	2	100	129	29	12	36	13	105	59,5	16	4	13,8	0,210
06500-331204	locating hole with slot	3	125	161	36	12	44	18,5	140	83,5	19,5	4	13,8	0,405
06500-331405	locating hole with slot	3	125	161	36	14	44	18,5	140	83,5	19,5	5	16,3	0,405

Order No.	Surface finish	Size	A	A1	B	SW	H	H1	L	L1	L2	kg
06500-4108	square socket	1	80	104	24	8	29	13	85,5	49	13	0,110
06500-4110	square socket	1	80	104	24	10	29	13	85,5	49	13	0,110
06500-4210	square socket	2	100	129	29	10	36	13	105	59,5	16	0,210
06500-4212	square socket	2	100	129	29	12	36	13	105	59,5	16	0,210
06500-4312	square socket	3	125	161	36	12	44	18,5	140	83,5	19,5	0,405
06500-4314	square socket	3	125	161	36	14	44	18,5	140	83,5	19,5	0,405

Crank Handles

with cylindrical safety grip



Material, surface finish:
Body and grip in anthracite grey thermoplastic, steel parts black oxide finish

Sample order:
nlm 06502-1108

Note:
The hub cover is supplied unassembled.
The Crank Handles can be secured axially to the shaft via feather connection by cross-pinning or with a socket head screw to DIN 6912 and a washer to DIN 7349.
Two steps have to be executed to bring the Cylindrical Safety Grip into operating position:
- Swivel the grip around the axis of rotation until it stops (90°).
- Press the grip in axial direction into locking position.

The pressed-in position is the most comfortable position to crank. The grip returns automatically after letting go.

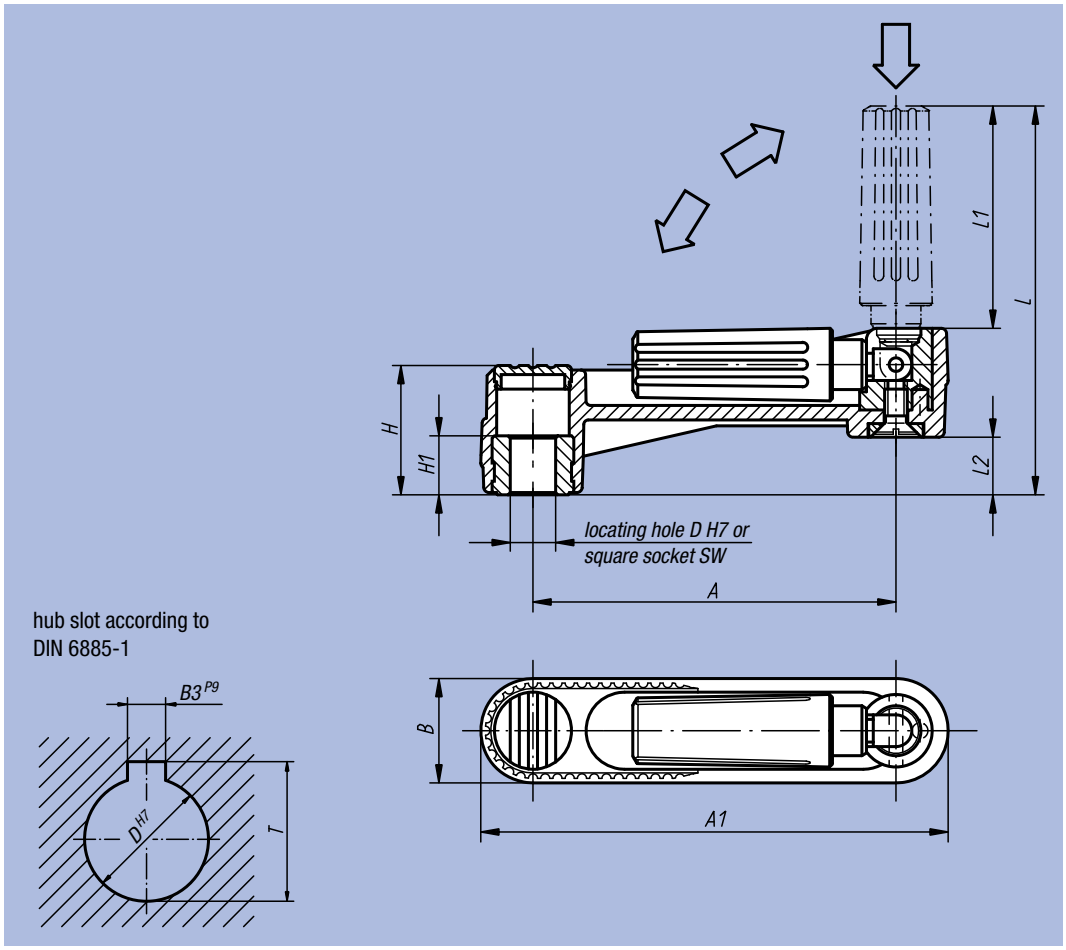

Order No.	Surface finish	Size	A	A1	B	D	H	H1	L	L1	L2	kg
06502-1108	locating hole without slot	1	80	104	24	8	29	13	84	47,5	13	0,100
06502-1110	locating hole without slot	1	80	104	24	10	29	13	84	47,5	13	0,100
06502-1210	locating hole without slot	2	100	129	29	10	36	13	104	58,5	16	0,190
06502-1212	locating hole without slot	2	100	129	29	12	36	13	104	58,5	16	0,190
06502-1312	locating hole without slot	3	125	161	36	12	44	18,5	138,5	82	19,5	0,370
06502-1314	locating hole without slot	3	125	161	36	14	44	18,5	138,5	82	19,5	0,370

Order No.	Surface finish	Size	A	A1	B	D	H	H1	L	L1	L2	B3	T	kg
06502-110802	locating hole with slot	1	80	104	24	8	29	13	84	47,5	13	2	9	0,100
06502-111003	locating hole with slot	1	80	104	24	10	29	13	84	47,5	13	3	11,4	0,100
06502-121003	locating hole with slot	2	100	129	29	10	36	13	104	58,5	16	3	11,4	0,190
06502-121204	locating hole with slot	2	100	129	29	12	36	13	104	58,5	16	4	13,8	0,190
06502-131204	locating hole with slot	3	125	161	36	12	44	18,5	138,5	82	19,5	4	13,8	0,370
06502-131405	locating hole with slot	3	125	161	36	14	44	18,5	138,5	82	19,5	5	16,3	0,370

Order No.	Surface finish	Size	A	A1	B	SW	H	H1	L	L1	L2	kg
06502-2108	square socket	1	80	104	24	8	29	13	84	47,5	13	0,100
06502-2110	square socket	1	80	104	24	10	29	13	84	47,5	13	0,100
06502-2210	square socket	2	100	129	29	10	36	13	104	58,5	16	0,190
06502-2212	square socket	2	100	129	29	12	36	13	104	58,5	16	0,190
06502-2312	square socket	3	125	161	36	12	44	18,5	138,5	82	19,5	0,370
06502-2314	square socket	3	125	161	36	14	44	18,5	138,5	82	19,5	0,370

Balanced Handles



Material:
Steel

Surface finish:
Galvanized

Sample order:
nlm 06510-108

Note:
Fixed Handle DIN 39.

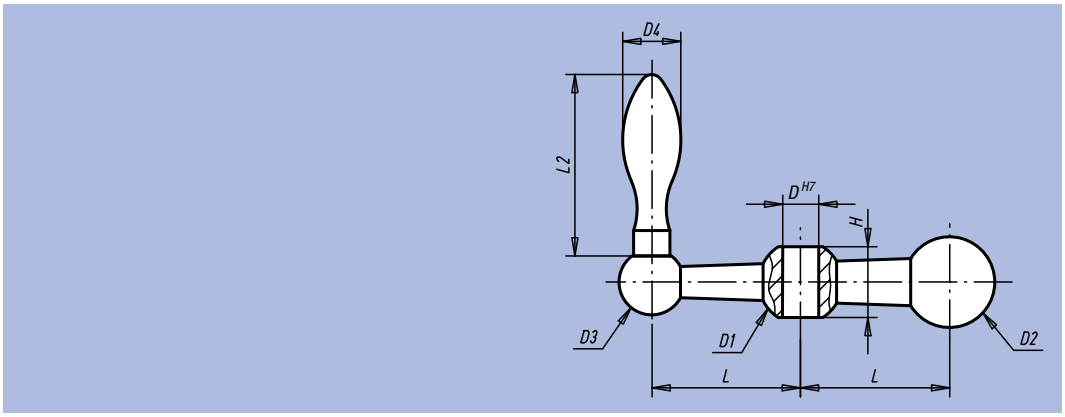

Order No.	D	D1	D2	D3	D4	H	L	L2	kg
06510-107	7	16	18	13	10	13	25	32	0,065
06510-108	8	20	22	16	14	17	34	46	0,140
06510-110	10	23	25	18	16	19,5	41	50	0,200
06510-112	12	26	28	20	18	21,5	50	56	0,415

Bar Knops



Material:
Malleable cast iron

Surface finish:
Sand-blasted

Sample order:
nlm 06550-12

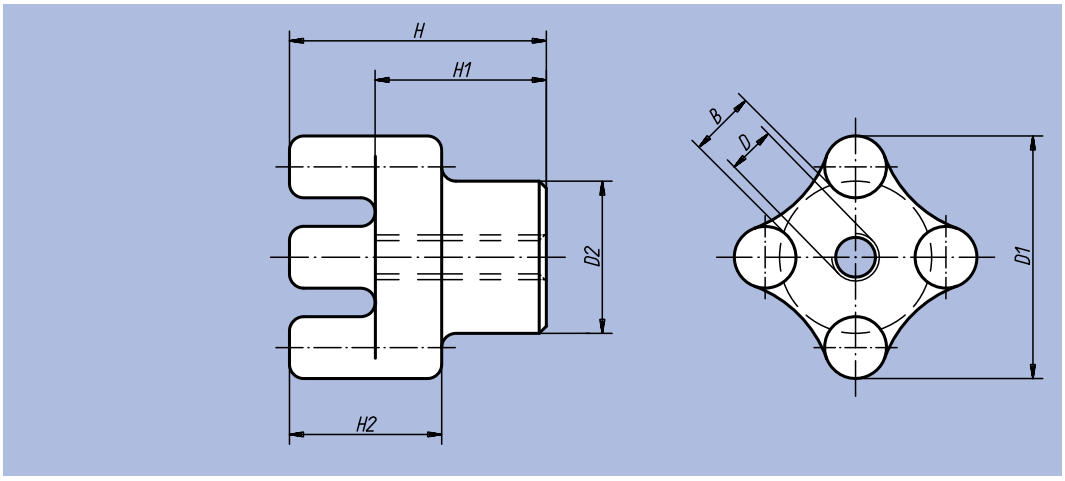

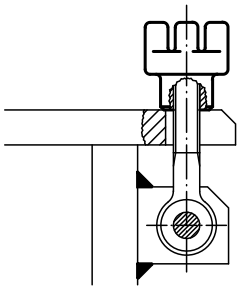

Order No.	D	D1	D2	H	H1	H2	B	kg
06550-10	M10	51	32	54	36	32	12	0,390
06550-12	M12	51	32	54	36	32	12	0,350
06550-14	M14	51	32	54	36	32	12	0,340
06550-16	M16	51	32	54	36	32	12	0,330
06550-20	M20	64	38	60	40	35	18	0,545
06550-24	M24	90	57	70	40	45	30	0,500

Notes:

Clamp Levers

with internal thread and plastic handle, steel or stainless steel



Material, surface finish:
Handle in glass-fibre reinforced plastic with toothed wheel in sprayed zinc; steel parts quality class 5.8, black oxide finish or stainless steel 1.4305, natural finish

Sample order:
nlm 06600-10486
(clamp lever colour signal green)

Note:
Δ Add the desired clamp lever colour here

On request:
Other internal threads and special versions.
Dimension „H1“ in other lengths.

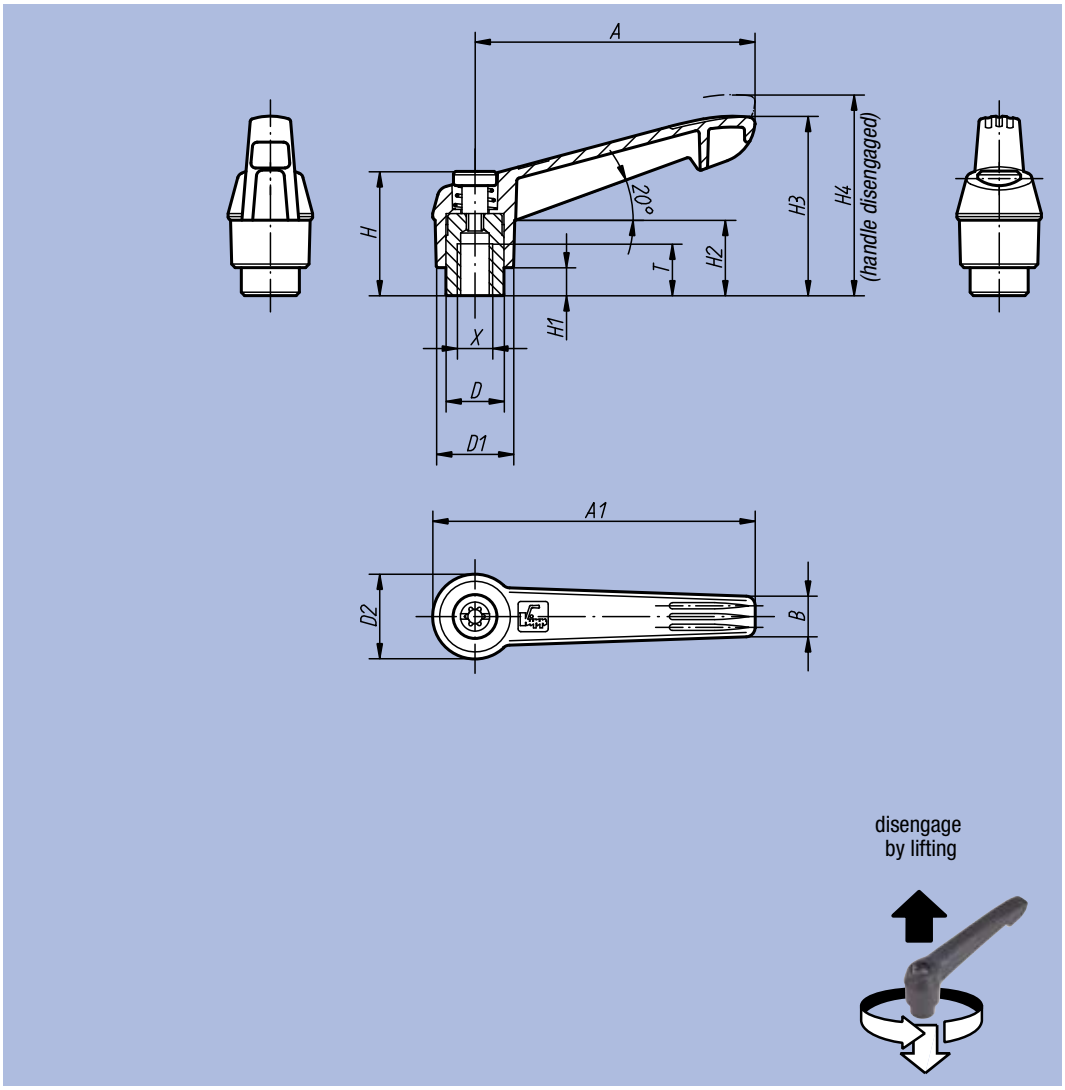

anthracite grey Δ = 1	orange Δ = 2	signal green Δ = 86	traffic red Δ = 84	bright yellow Δ = 16	traffic blue Δ = 87
RAL 7021	RAL 2004	RAL 6032	RAL 3020	RAL 1021	RAL 5017

Clamp Levers

with internal thread and plastic handle, steel or stainless steel

Clamp Levers with internal thread and plastic handle in steel

Order No.	Size	Internal thread X	T	D	D1	D2	H	H1	H2	H3	H4	A	A1	B	No. of teeth	kg
06600-104Δ	1	M4	9	10	13	14,5	24,5	4	15	30	33,5	40	47	7,5	16	0,013
06600-105Δ	1	M5	9	10	13	14,5	24,5	4	15	30	33,5	40	47	7,5	16	0,013
06600-106Δ	1	M6	9	10	13	14,5	24,5	4	15	30	33,5	40	47	7,5	16	0,013
06600-206Δ	2	M6	12	13,5	18	19,5	28,5	6,5	17,5	41,5	45,5	65	75	9,5	20	0,029
06600-208Δ	2	M8	12	13,5	18	19,5	28,5	6,5	17,5	41,5	45,5	65	75	9,5	20	0,029
06600-308Δ	3	M8	14	16	21,5	23	37	10	24	53,5	58	80	91,5	11	22	0,050
06600-310Δ	3	M10	14	16	21,5	23	37	10	24	53,5	58	80	91,5	11	22	0,050
06600-410Δ	4	M10	17	19	25,5	27,5	43	10	26	61	66	95	109	13	24	0,078
06600-412Δ	4	M12	17	19	25,5	27,5	43	10	26	61	66	95	109	13	24	0,078
06600-512Δ	5	M12	23	23	30	32,5	49	12	33	72	77	110	126	15,5	26	0,130
06600-516Δ	5	M16	23	23	30	32,5	49	12	33	72	77	110	126	15,5	26	0,130

Clamp Levers with internal thread and plastic handle, steel parts in stainless steel

Order No.	Size	Internal thread X	T	D	D1	D2	H	H1	H2	H3	H4	A	A1	B	No. of teeth	kg
06601-104Δ	1	M4	9	10	13	14,5	24,5	4	15	30	33,5	40	47	7,5	16	0,013
06601-105Δ	1	M5	9	10	13	14,5	24,5	4	15	30	33,5	40	47	7,5	16	0,013
06601-106Δ	1	M6	9	10	13	14,5	24,5	4	15	30	33,5	40	47	7,5	16	0,013
06601-206Δ	2	M6	12	13,5	18	19,5	28,5	6,5	17,5	41,5	45,5	65	75	9,5	20	0,029
06601-208Δ	2	M8	12	13,5	18	19,5	28,5	6,5	17,5	41,5	45,5	65	75	9,5	20	0,029
06601-308Δ	3	M8	14	16	21,5	23	37	10	24	53,5	58	80	91,5	11	22	0,050
06601-310Δ	3	M10	14	16	21,5	23	37	10	24	53,5	58	80	91,5	11	22	0,050
06601-410Δ	4	M10	17	19	25,5	27,5	43	10	26	61	66	95	109	13	24	0,078
06601-412Δ	4	M12	17	19	25,5	27,5	43	10	26	61	66	95	109	13	24	0,078
06601-512Δ	5	M12	23	23	30	32,5	49	12	33	72	77	110	126	15,5	26	0,130
06601-516Δ	5	M16	23	23	30	32,5	49	12	33	72	77	110	126	15,5	26	0,130

Clamp Levers

with external thread and plastic handle, steel or stainless steel



Material, surface finish:
Handle in glass-fibre reinforced plastic with toothed wheel in sprayed zinc; steel parts quality class 5.8, black oxide finish or stainless steel 1.4305, natural finish

Sample order:
nlm 06610-1051X40
(clamp lever anthracite grey; please also indicate dimension L)

Note:
Δ Add the desired clamp lever colour here.

On request:
Other external threads, screw lengths and special versions.
Dimension „H1“ available in other lengths at extra charge.

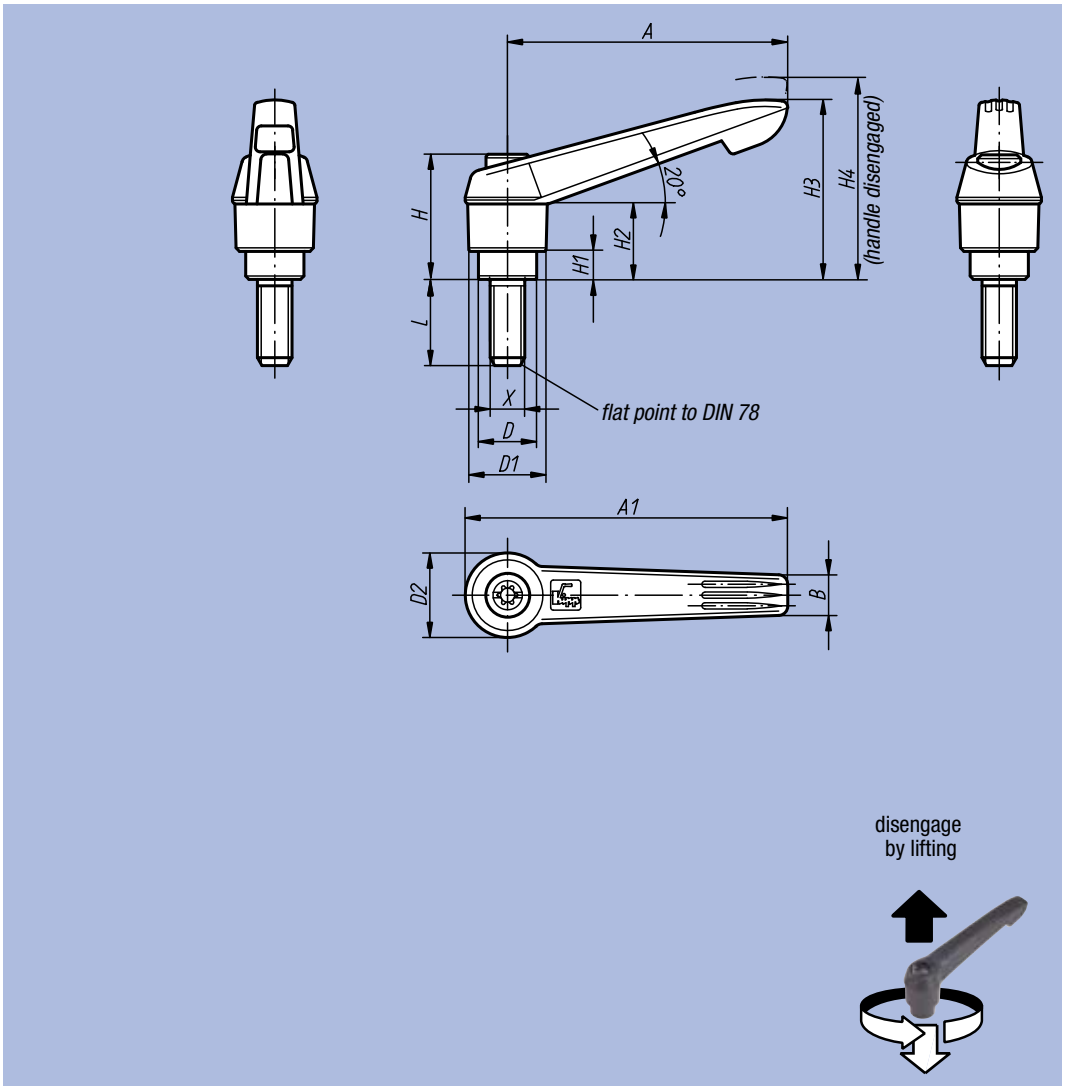

anthracite grey Δ = 1	orange Δ = 2	signal green Δ = 86	traffic red Δ = 84	bright yellow Δ = 16	traffic blue Δ = 87
RAL 7021	RAL 2004	RAL 6032	RAL 3020	RAL 1021	RAL 5017

Clamp Levers

with external thread and plastic handle, steel or stainless steel

Technical data

Size	External thread X	D	D1	D2	H	H1	H2	H3	H4	A	A1	B	No. of teeth
1	M5	10	13	14,5	24,5	4	15	30	33,5	40	47	7,5	16
1	M6	10	13	14,5	24,5	4	15	30	33,5	40	47	7,5	16
2	M6	13,5	18	19,5	28,5	6,5	17,5	41,5	45,5	65	75	9,5	20
2	M8	13,5	18	19,5	28,5	6,5	17,5	41,5	45,5	65	75	9,5	20
2	M10	13,5	18	19,5	28,5	6,5	17,5	41,5	45,5	65	75	9,5	20
3	M8	16	21,5	23	37	10	24	53,5	58	80	91,5	11	22
3	M10	16	21,5	23	37	10	24	53,5	58	80	91,5	11	22
4	M10	19	25,5	27,5	43	10	26	61	66	95	109	13	24
4	M12	19	25,5	27,5	43	10	26	61	66	95	109	13	24
5	M12	23	30	32,5	49	12	33	72	77	110	126	15,5	26
5	M16	23	30	32,5	49	12	33	72	77	110	126	15,5	26

Clamp Levers with external thread and plastic handle, steel parts in steel

Order No.	Size	External thread X	L = screw length
06610-105ΔX	1	M5	10 / 15 / 20 / 25 / 30 / 35 / 40 / 45 / 50
06610-106ΔX	1	M6	10 / 15 / 20 / 25 / 30 / 35 / 40 / 45 / 50
06610-206ΔX	2	M6	15 / 20 / 25 / 30 / 35 / 40 / 45 / 50 / 55 / 60
06610-208ΔX	2	M8	15 / 20 / 25 / 30 / 35 / 40 / 45 / 50 / 55 / 60
06610-210ΔX	2	M10	15 / 20 / 25 / 30 / 35 / 40 / 45 / 50 / 55 / 60
06610-308ΔX	3	M8	15 / 20 / 25 / 30 / 35 / 40 / 45 / 50 / 55 / 60
06610-310ΔX	3	M10	15 / 20 / 25 / 30 / 35 / 40 / 45 / 50 / 55 / 60
06610-410ΔX	4	M10	20 / 25 / 30 / 35 / 40 / 45 / 50 / 55 / 60 / 70 / 80 / 90
06610-412ΔX	4	M12	20 / 25 / 30 / 35 / 40 / 45 / 50 / 55 / 60 / 70 / 80 / 90
06610-512ΔX	5	M12	25 / 30 / 35 / 40 / 45 / 50 / 55 / 60 / 70 / 80 / 90
06610-516ΔX	5	M16	25 / 30 / 35 / 40 / 45 / 50 / 55 / 60 / 70 / 80 / 90

Clamp Levers with external thread and plastic handle, steel parts in stainless steel

Order No.	Size	External thread X	L = screw length
06611-105ΔX	1	M5	10 / 15 / 20 / 25
06611-106ΔX	1	M6	10 / 15 / 20 / 25 / 30 / 40 / 50
06611-206ΔX	2	M6	15 / 20 / 25 / 30 / 40 / 50 / 60
06611-208ΔX	2	M8	15 / 20 / 25 / 30 / 40 / 50 / 60
06611-210ΔX	2	M10	20 / 25 / 30 / 40 / 50 / 60
06611-308ΔX	3	M8	20 / 25 / 30 / 40 / 50 / 60
06611-310ΔX	3	M10	20 / 25 / 30 / 40 / 50 / 60
06611-412ΔX	4	M12	25 / 30 / 40 / 50 / 60
06611-516ΔX	5	M16	30 / 40 / 50 / 60

Clamping Joints



Material, surface finish:
Clamp Levers:
Handle, glass-fibre thermoplastic, anthracite grey;
steel parts quality class 5.8, black oxide finish;
remaining Components:
High-strength aluminium, nickel silver anodized

Sample order:
nlm 06620-03

Note:
Clamping Joints are used to clamp round cross sections (bars, tubes, etc.) and are continuously adjustable. The design has been kept as simple as possible and, in conjunction with the adjustable Clamp Lever, it permits rapid clamping.

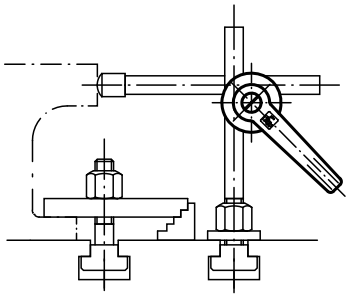

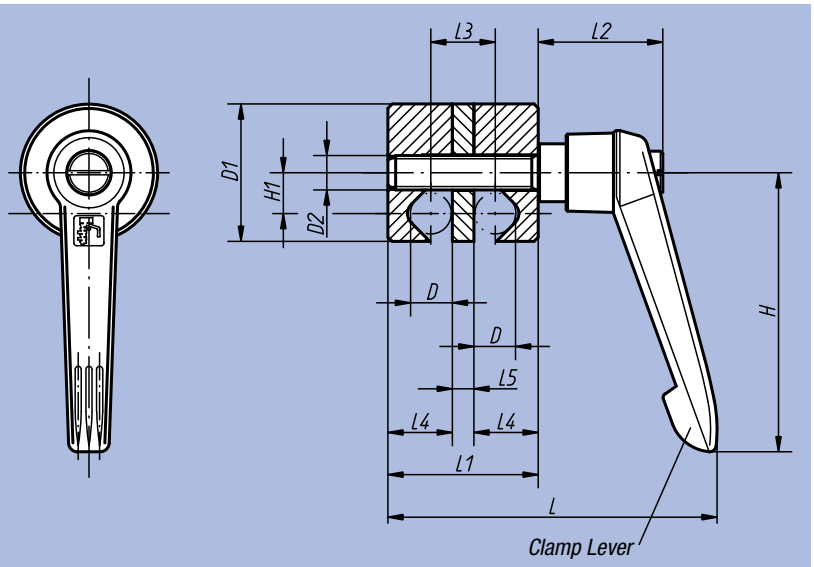

Order No.	Size	D	D1	D2	L	L1	L2	L3	L4	L5	H	H1	kg
06620-01	1	8	28	M8	72	31	29	13	13	5	65	8,5	0,082
06620-02	2	10	32	M8	76	35	29	15	15	5	65	9,5	0,100
06620-03	3	12	36	M8	81	40	29	18	17	6	65	10,5	0,127
06620-04	4	16	45	M10	103	50	37,5	22	22	6	80	13,5	0,233
06620-05	5	20	74	M10	131	70	42,5	30	30	10	95	22	0,750

Clamping Joints

individually adjustable



Material, surface finish:
Wing Grip: handle in thermoplastic, anthracite grey;
threaded bolt in blue chromated steel 5.8;
other parts in high-strength aluminium nickel silver anodized

Sample order:
nlm 06621-02

Note:
Clamping Joints are used to clamp round cross sections (bars, tubes, etc.) and are continuously adjustable.
The design has been kept as simple as possible and, in conjunction with the Wing Grips, it permits rapid clamping.

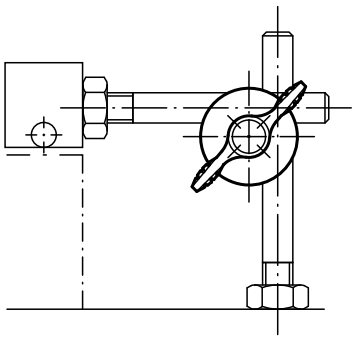

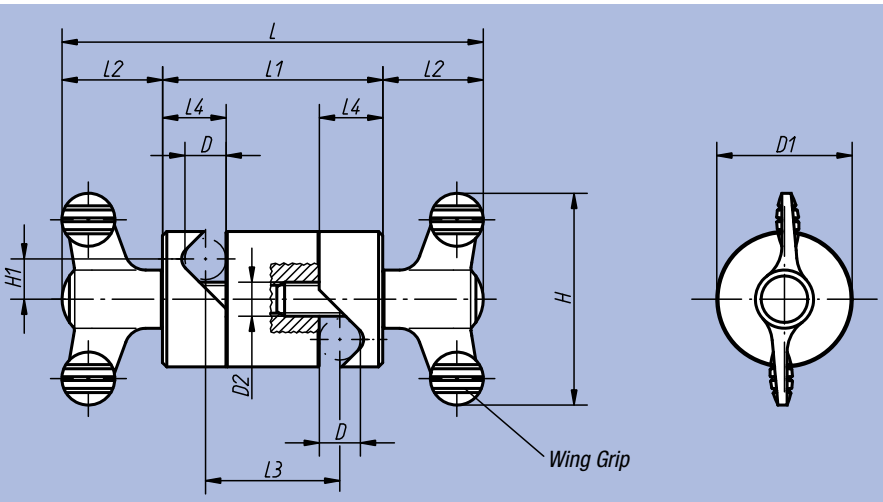

Order No.	Size	D	D1	D2	L	L1	L2	L3	L4	H	H1	kg
06621-01	1	8	28	M8	90	42	24	24	13	50	8,5	0,086
06621-02	2	10	32	M8	100	52	24	32	15	50	9,5	0,124
06621-03	3	12	36	M8	104	56	24	34	17	50	10,5	0,157
06621-04	4	16	45	M10	143,2	72	35,6	44	22	75	13,5	0,345
06621-05	5	20	74	M10	173,2	102	35,6	62	30	75	22	1,110

Multiple Connectors



Material, surface finish:
Wing Grip: handle in thermoplastic, anthracite grey;
threaded bolt in blue chromated steel 5.8;
main body in high-strength aluminium nickel silver anodized

Sample order:
nlm 06622-04

Note:
Multiple Connectors are used to extend round cross sections (bars, tubes, etc.) in a coaxial or parallel arrangement. A parallel arrangement of bars, for example, can also be used to strengthen or stiffen an assembly. The locating hole system in the main body also makes it possible to produce right-angled connections.

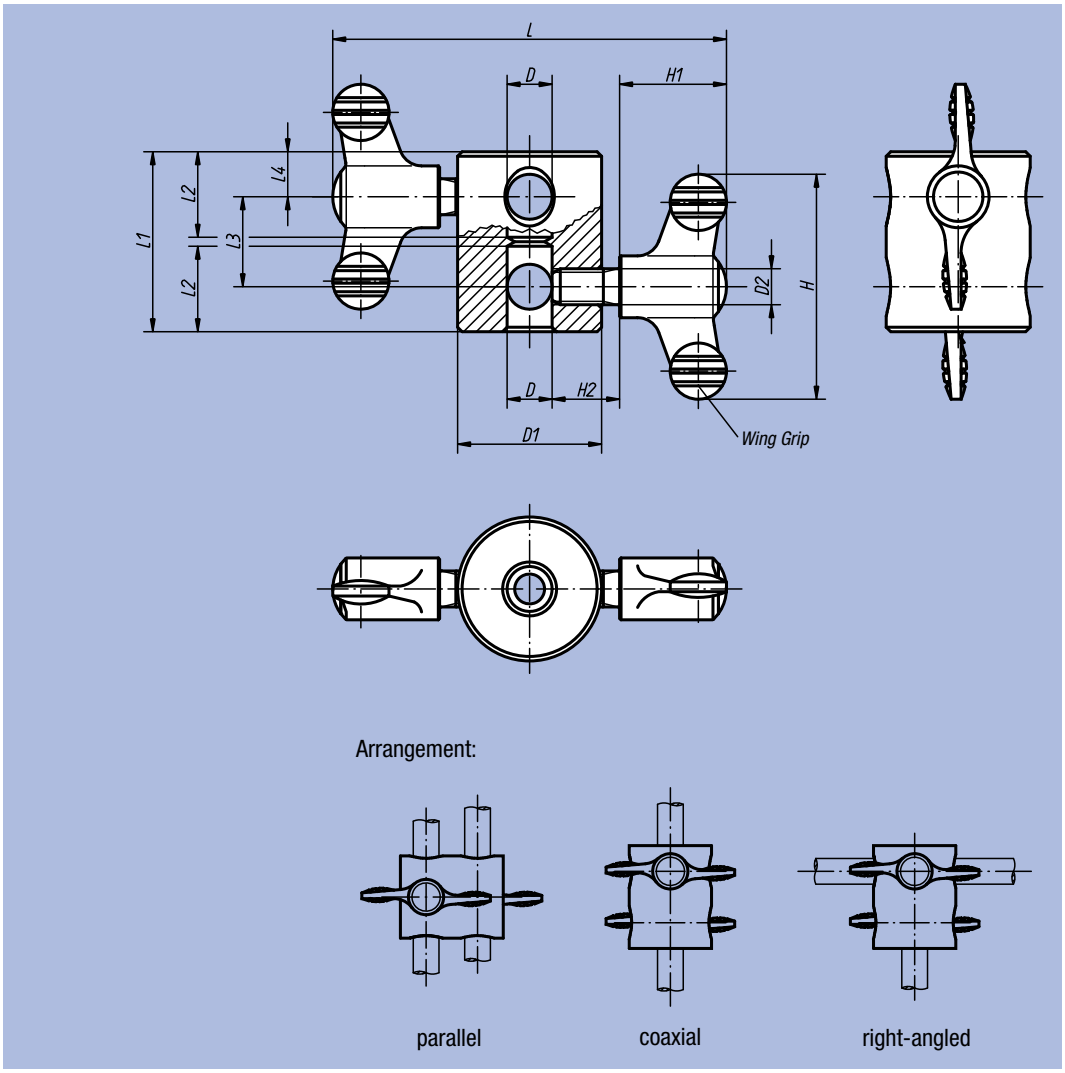

Order No.	Size	D	D1	D2	L	L1	L2	L3	L4	H	H1	H2	kg
06622-01	1	8	28	M8	86	36	17	20	8	50	24	15	0,074
06622-02	2	10	32	M8	88	40	19	20	10	50	24	15	0,093
06622-03	3	12	36	M8	90	44	21	20	12	50	24	15	0,118
06622-04	4	16	45	M10	127,2	56	27	24	16	75	35,6	20	0,262

T-Grips



Material, surface finish:
Thermoplastic, glass-fibre reinforced thermoplastic, black; threaded bush in brass; threaded bolt in steel, galvanised

Sample order:
nlm 06649-25005X15
(please also indicate dimension L)

On request:
Colour of the grip red, yellow, green, blue, white or grey (provided the number of pieces more than 250).

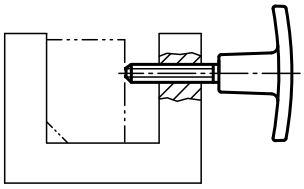

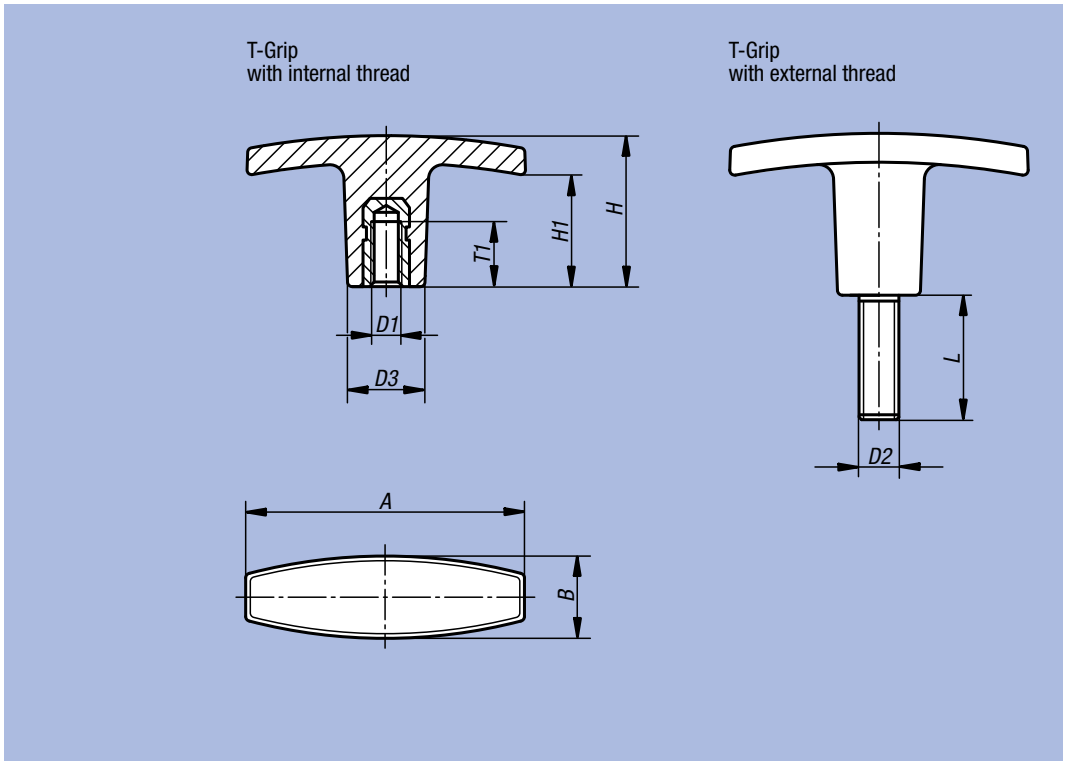

T-Grips, with internal thread

Order No.	A	B	D1	D3	H	H1	T1	kg
06649-14005	40	13	M5	13	30,5	20	10	0,011
06649-15005	50	15	M5	14	24	16	10	0,013
06649-16006	60	17	M6	16	31,5	23	12	0,017
06649-17108	71	19,5	M8	20	36	19	20	0,028
06649-17110	71	19,5	M10	20	36	19	20	0,030
06649-18010	80	26	M10	26	39,5	26	25	0,048
06649-18012	80	26	M12	26	39,5	26	25	0,056

T-Grips, with external thread

Order No.	A	B	D2	D3	H	H1	L = screw length
06649-24005X	40	13	M5	13	30,5	20	15
06649-25005X	50	15	M5	14	24	16	15 / 20
06649-26006X	60	17	M6	16	31,5	23	20 / 25
06649-27108X	71	19,5	M8	20	36	19	20 / 30
06649-27110X	71	19,5	M10	20	36	19	20 / 30
06649-28010X	80	26	M10	26	39,5	26	30
06649-28012X	80	26	M12	26	39,5	26	40

T-Grips



Material:
Black duroplastic PF 31, bush and threaded bolt in galvanized steel

Surface finish:
Deburred and high-polish finish

Sample order:
nlm 06650-27006X18
(please also indicate dimension L)

Note:
The versions 06650-17008 and 06650-18008 have a bush in copper-plated steel.

On request:
Other external threads, screw lengths and colours.

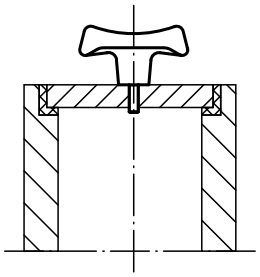

T-Grip
with internal thread

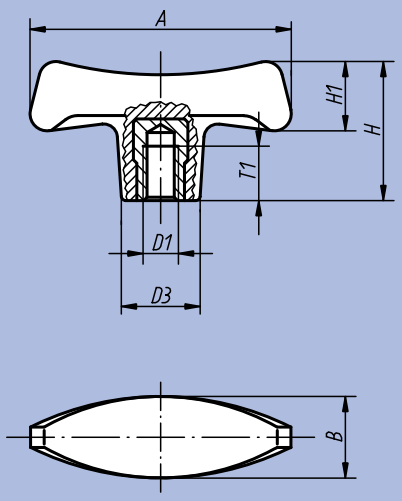

T-Grip
with external thread

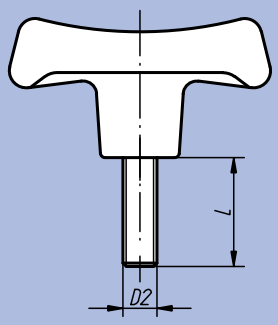

Order No.	Surface finish	A	B	D1	D3	H	H1	T1	kg
06650-17006	internal thread	70	22	M6	19,6	38,8	20,2	12	0,035
06650-17008	internal thread	70	22	M8	19,6	38,8	20,2	14	0,041
06650-17010	internal thread	70	22	M10	19,6	38,8	20,2	14	0,040
06650-18008	internal thread	80	25	M8	22,3	44	23	14	0,053
06650-18010	internal thread	80	25	M10	22,3	44	23	22	0,056
06650-19010	internal thread	90	28	M10	25	49,6	26	22	0,072
06650-19012	internal thread	90	28	M12	25	49,6	26	21	0,082

Order No.	Surface finish	A	B	D2	D3	H	H1	L = screw length
06650-27006X	external thread	70	22	M6	19,6	38,8	20,2	18
06650-27008X	external thread	70	22	M8	19,6	38,8	20,2	24
06650-28010X	external thread	80	25	M10	22,3	44	23	20 / 30
06650-29010X	external thread	90	28	M10	25	49,6	26	30
06650-29012X	external thread	90	28	M12	25	49,6	26	24

Wing Grips in stainless steel



Material, surface finish:
Stainless steel 1.4308, ground and polished

Sample order:
nlm 06651-105

On request:
Wing Grips with external threads.

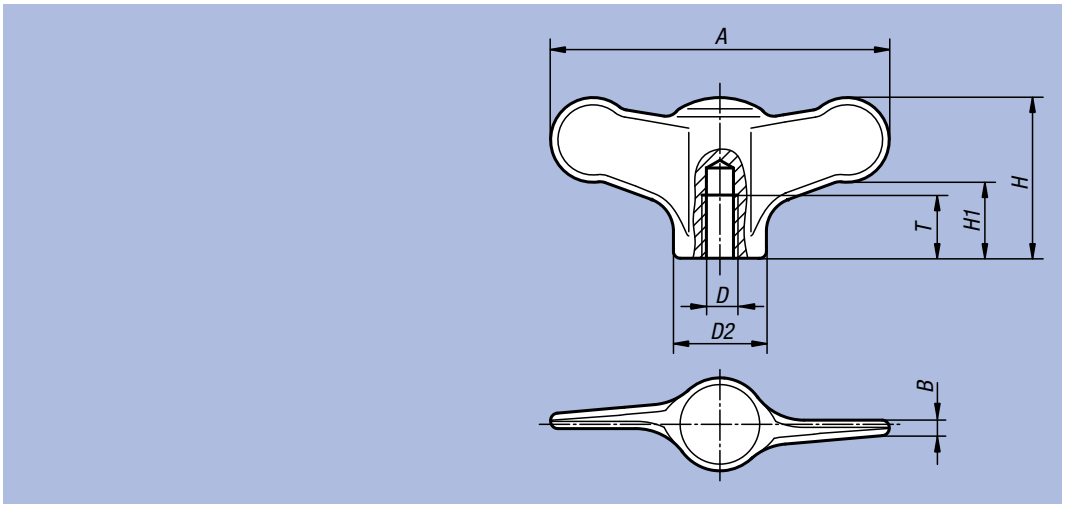

Order No.	D	D2	A	B	H	H1	T	kg
06651-904	M4	10,5	38	1,7	18	8,5	9	0,015
06651-905	M5	10,5	38	1,7	18	8,5	9	0,015
06651-906	M6	10,5	38	1,7	18	8,5	9	0,015
06651-105	M5	14	50	2,3	24	11,5	12	0,035
06651-106	M6	14	50	2,3	24	11,5	12	0,035
06651-208	M8	21	75	3,4	35	16,5	15	0,121
06651-210	M10	21	75	3,4	35	16,5	15	0,121

Notes:

Wing Grips



Material, surface finish:
Anthracite grey thermoplastic;
bush and threaded bolt in steel 5.8, blue chromated or stainless steel 1.4305, natural finish

Sample order:
nlm 06652-1057X20 (grip cap colour bright yellow; please also indicate dimension L)

Note:
Δ Add the desired grip cap colour here; no colour code is required with anthracite grey grip caps

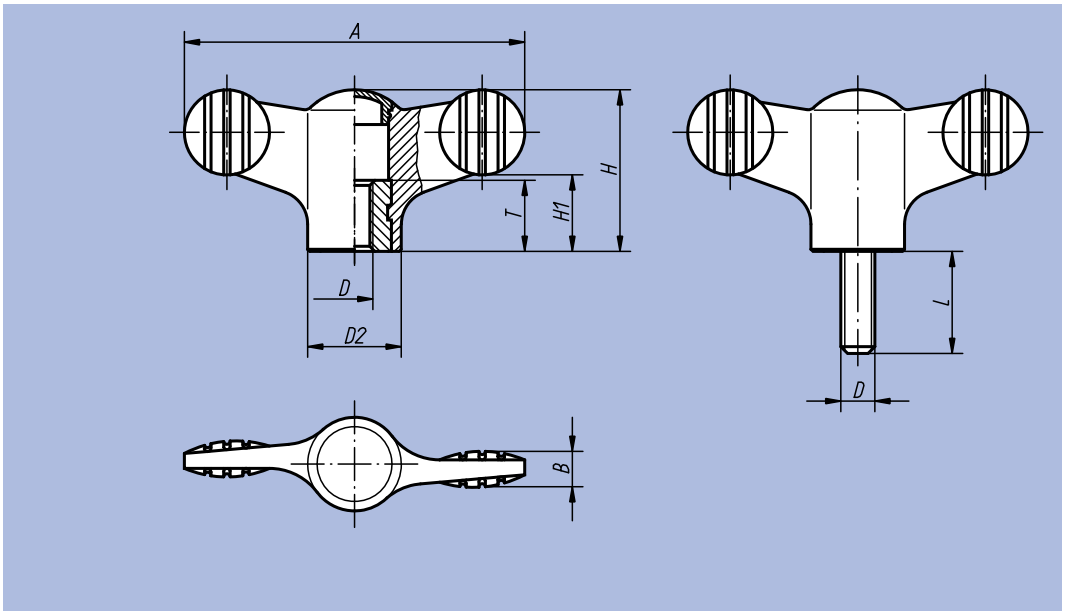

anthracite grey	light grey Δ = 5	traffic red Δ = 6	bright yellow Δ = 7
RAL 7021	RAL 7035	RAL 3020	RAL 1021

Order No. Surface finish bush in steel	Order No. Surface finish bush in stainless steel	Surface finish	D	D2	A	B	H	H1	T
06652-904Δ	06652-0904Δ	internal thread	M4	12	38	4,5	18	8,5	10
06652-905Δ	06652-0905Δ	internal thread	M5	12	38	4,5	18	8,5	10
06652-906Δ	06652-0906Δ	internal thread	M6	12	38	4,5	18	8,5	10
06652-105Δ	06652-0105Δ	internal thread	M5	14	50	5	24	11,5	10
06652-106Δ	06652-0106Δ	internal thread	M6	14	50	5	24	11,5	10
06652-208Δ	06652-0208Δ	internal thread	M8	21	75	7	35,6	16,5	14
06652-210Δ	06652-0210Δ	internal thread	M10	21	75	7	35,6	16,5	14

Order No. Surface finish bolt in steel	Order No. Surface finish bolt in stainless steel	Surface finish	D	D2	A	B	H	H1	L = screw length
06652-904ΔX	06652-0904ΔX	external thread	M4	12	38	4,5	18	8,5	10 / 15
06652-905ΔX	06652-0905ΔX	external thread	M5	12	38	4,5	18	8,5	15 / 20 / 30
06652-906ΔX	06652-0906ΔX	external thread	M6	12	38	4,5	18	8,5	20 / 30 / 40
06652-105ΔX	06652-0105ΔX	external thread	M5	14	50	5	24	11,5	15 / 20
06652-106ΔX	06652-0106ΔX	external thread	M6	14	50	5	24	11,5	20 / 30 / 40
06652-108ΔX	06652-0108ΔX	external thread	M8	14	50	5	24	11,5	20 / 30 / 40
06652-208ΔX	06652-0208ΔX	external thread	M8	21	75	7	35,6	16,5	20 / 30 / 40
06652-210ΔX	06652-0210ΔX	external thread	M10	21	75	7	35,6	16,5	20 / 30 / 40 / 50

Wing Grips

with continuous internal thread



Material, surface finish:
Anthracite grey thermoplastic,
bush in steel 5.8, blue chromated or
stainless steel 1.4305, natural finish.

Sample order:
nlm 06652-1904

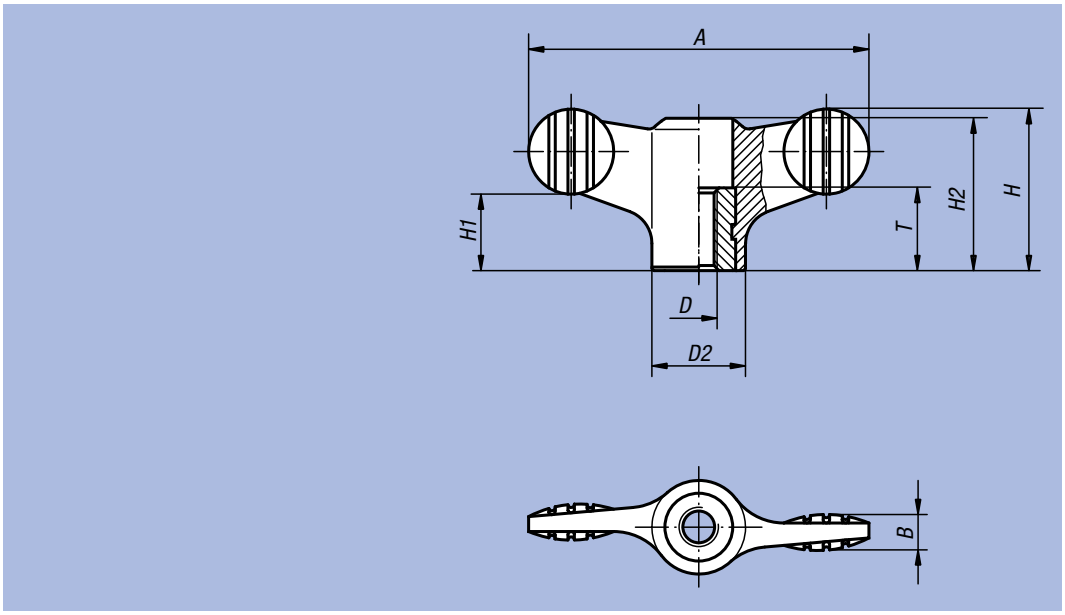

Order No.	Surface finish	D	D2	A	B	H	H1	H2	T
06652-1904	bush in steel	M4	12	38	4,5	18	8,5	16,1	10
06652-1905	bush in steel	M5	12	38	4,5	18	8,5	16,1	10
06652-1906	bush in steel	M6	12	38	4,5	18	8,5	16,1	10
06652-1105	bush in steel	M5	14	50	5	24	11,5	22	10
06652-1106	bush in steel	M6	14	50	5	24	11,5	22	10
06652-1208	bush in steel	M8	21	75	7	35,6	17	33,3	14
06652-1210	bush in steel	M10	21	75	7	35,6	17	33,3	14
06652-10904	bush in stainless steel	M4	12	38	4,5	18	8,5	16,1	10
06652-10905	bush in stainless steel	M5	12	38	4,5	18	8,5	16,1	10
06652-10906	bush in stainless steel	M6	12	38	4,5	18	8,5	16,1	10
06652-10105	bush in stainless steel	M5	14	50	5	24	11,5	22	10
06652-10106	bush in stainless steel	M6	14	50	5	24	11,5	22	10
06652-10208	bush in stainless steel	M8	21	75	7	35,6	17	33,3	14
06652-10210	bush in stainless steel	M10	21	75	7	35,6	17	33,3	14

Miniwings



Material, surface finish:
Anthracite grey thermoplastic;
bush in brass or stainless steel 1.4305, natural finish;
threaded bolt in steel 5.8, blue chromated or stainless steel 1.4305, natural finish

Sample order:
nlm 06652-005X10
(please also indicate dimension L)

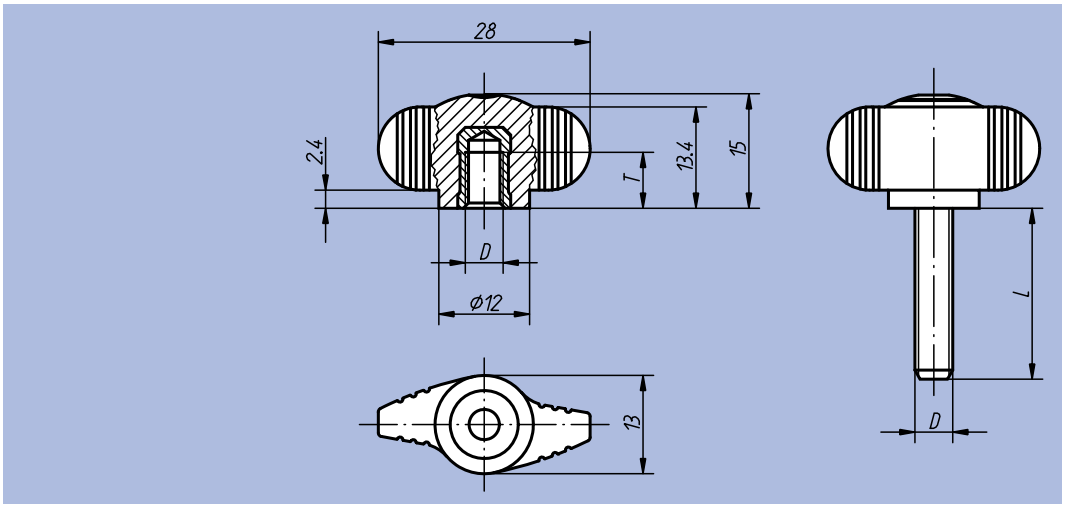

Order No.	Surface finish	Surface finish	D	T	kg
06652-004	internal thread	bush in brass	M4	6	0,003
06652-005	internal thread	bush in brass	M5	7,5	0,004
06652-006	internal thread	bush in brass	M6	9	0,005
06652-0004	internal thread	bush in brass	M4	6	0,003
06652-0005	internal thread	bush in brass	M5	7,5	0,004
06652-0006	internal thread	bush in brass	M6	9	0,005

Order No.	Surface finish	Surface finish	D	L = screw length
06652-004X	external thread	bolt in steel	M4	8
06652-005X	external thread	bolt in steel	M5	10 / 15 / 20
06652-006X	external thread	bolt in steel	M6	10 / 15 / 20 / 25 / 30
06652-008X	external thread	bolt in steel	M8	20 / 25 / 30 / 40
06652-0004X	external thread	bolt in stainless steel	M4	8
06652-0005X	external thread	bolt in stainless steel	M5	10 / 15 / 20
06652-0006X	external thread	bolt in stainless steel	M6	10 / 15 / 20 / 25 / 30
06652-0008X	external thread	bolt in stainless steel	M8	20 / 25 / 30 / 40

Miniwing

with continuous internal thread



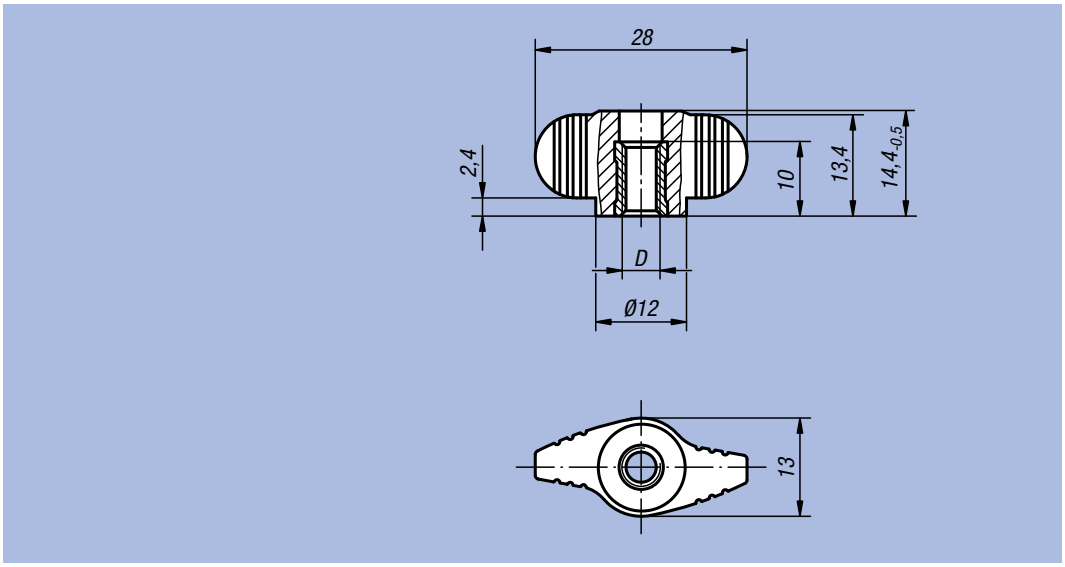

Material, surface finish:
Anthracite grey thermoplastic,
bush in steel 5.8, blue chromated or
stainless steel 1.4305, natural finish.

Sample order:
nlm 06652-1004

Order No.	Surface finish	D
06652-1904	bush in steel	M4
06652-1905	bush in steel	M5
06652-1906	bush in steel	M6
06652-10904	bush in stainless steel	M4
06652-10905	bush in stainless steel	M5
06652-10906	bush in stainless steel	M6

Wing screws

with a counter grip



Material, surface finish:
Wing screw: Anthracite grey thermoplastic. Threaded bolt in steel 5.8, blue chromated.
Counter grip: Anthracite grey thermoplastic. Bush in steel, blue chromated.

Sample order:
nlm 06655-904X30

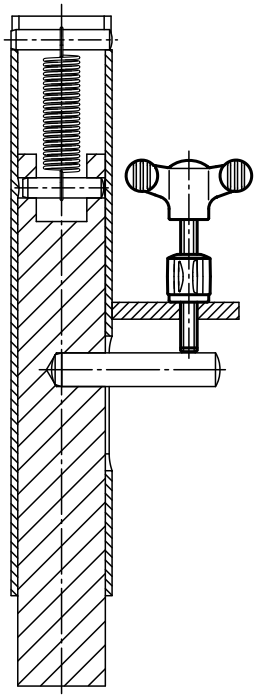

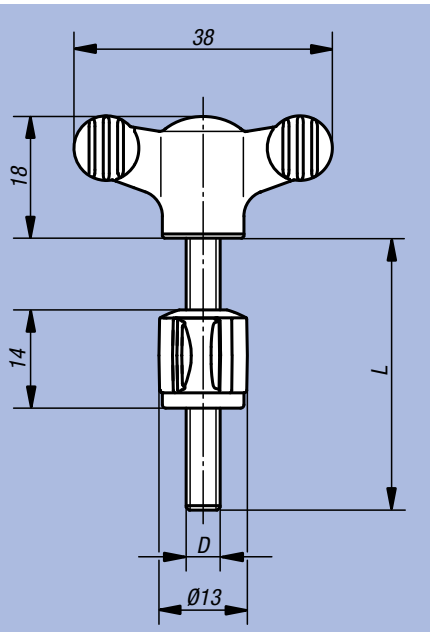

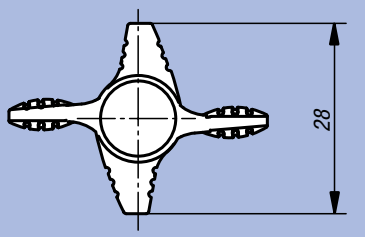

Order No.	D	L
06655-904X30	M4	30
06655-904X40	M4	40
06655-905X30	M5	30
06655-905X40	M5	40
06655-906X30	M6	30
06655-906X40	M6	40

Triangular Star Grips

with high collar



Material:
Black duroplastic PF 31, bush and threaded bolt in galvanized steel or stainless steel with natural finish

Surface finish:
Deburred and high-polish finish

Sample order:
nlm 06702-14008X20
(please also indicate dimension L)

On request:
Other external threads, screw lengths and colours.

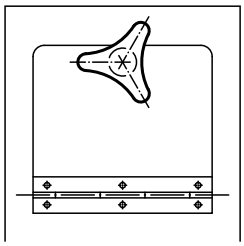

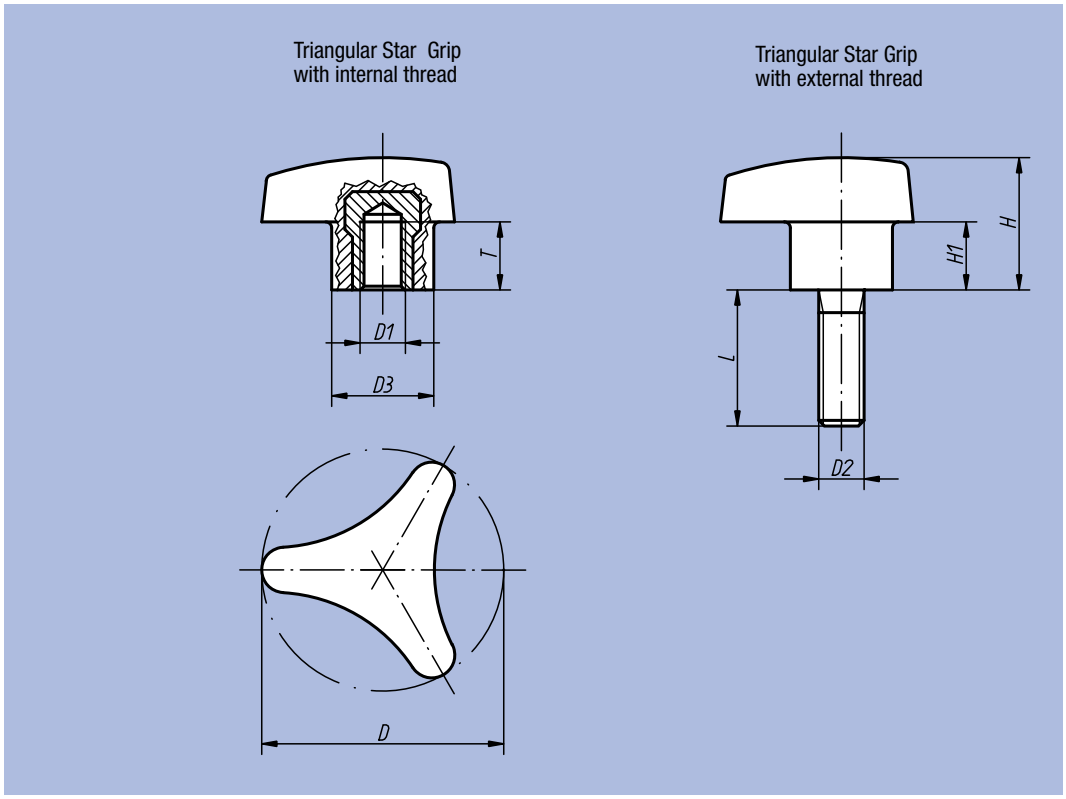

Order No.	Surface finish	Surface finish	D	D1	D3	H	H1	T
06702-14006	internal thread	bush in steel	40	M6	13,5	24	13,5	9
06702-15008	internal thread	bush in steel	50	M8	17,4	28	14	13
06702-16210	internal thread	bush in steel	62	M10	21,8	34	17	13
06702-24006	internal thread	bush in stainless steel	40	M6	13,5	24	13,5	9
06702-25008	internal thread	bush in stainless steel	50	M8	17,4	28	14	13
06702-26210	internal thread	bush in stainless steel	62	M10	21,8	34	17	13

Order No.	Surface finish	Surface finish	D	D2	D3	H	H1	L
06702-14006X15	external thread	bush in steel	40	M6	13,5	24	13,5	15
06702-14008X20	external thread	bush in steel	40	M8	13,5	24	13,5	20
06702-15008X20	external thread	bush in steel	50	M8	17,4	28	14	20
06702-15010X25	external thread	bush in steel	50	M10	17,4	28	14	25
06702-16210X25	external thread	bush in steel	62	M10	21,8	34	17	25
06702-24006X20	external thread	bush in stainless steel	40	M6	13,5	24	13,5	20
06702-24008X20	external thread	bush in stainless steel	40	M8	13,5	24	13,5	20
06702-25008X20	external thread	bush in stainless steel	50	M8	17,4	28	14	20
06702-25010X30	external thread	bush in stainless steel	50	M10	17,4	28	14	30
06702-26210X30	external thread	bush in stainless steel	62	M10	21,8	34	17	30

Duroplastic Handwheels



Material:
Handwheel in duroplastic PF 31;
bush in steel, black oxide finish

Surface finish:
High-polish finish, black

Sample order:
nlm 06830-70112

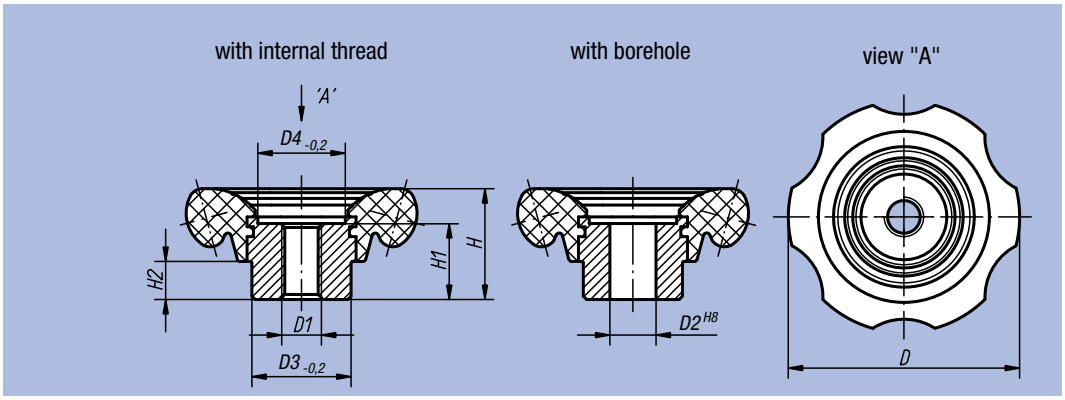

Order No.	Surface finish	D	D1	D2	D3	D4	H	H1	H2
06830-70110	handwheel with internal thread	70	M10	-	30	26,5	33,5	23	11,5
06830-70112	handwheel with internal thread	70	M12	-	30	26,5	33,5	23	11,5
06830-83112	handwheel with internal thread	83	M12	-	35	31,5	40	28	14
06830-83116	handwheel with internal thread	83	M16	-	35	31,5	40	28	14
06830-70212	handwheel with borehole	70	-	12	30	26,5	33,5	23	11,5
06830-70214	handwheel with borehole	70	-	14	30	26,5	33,5	23	11,5
06830-83214	handwheel with borehole	83	-	14	35	31,5	40	28	14
06830-83216	handwheel with borehole	83	-	16	35	31,5	40	28	14



Five Lobe Grips



Material:
Black duroplastic PF 31,
bush and threaded bolt in
galvanized steel

Surface finish:
Deburred and high-polish finish

Sample order:
nlm 06850-3206X12
(please also indicate dimension L)

Note:
The versions 06850-3205 and
06850-3206 have a bush in brass.

On request:
Other external threads, screw
lengths and colours.

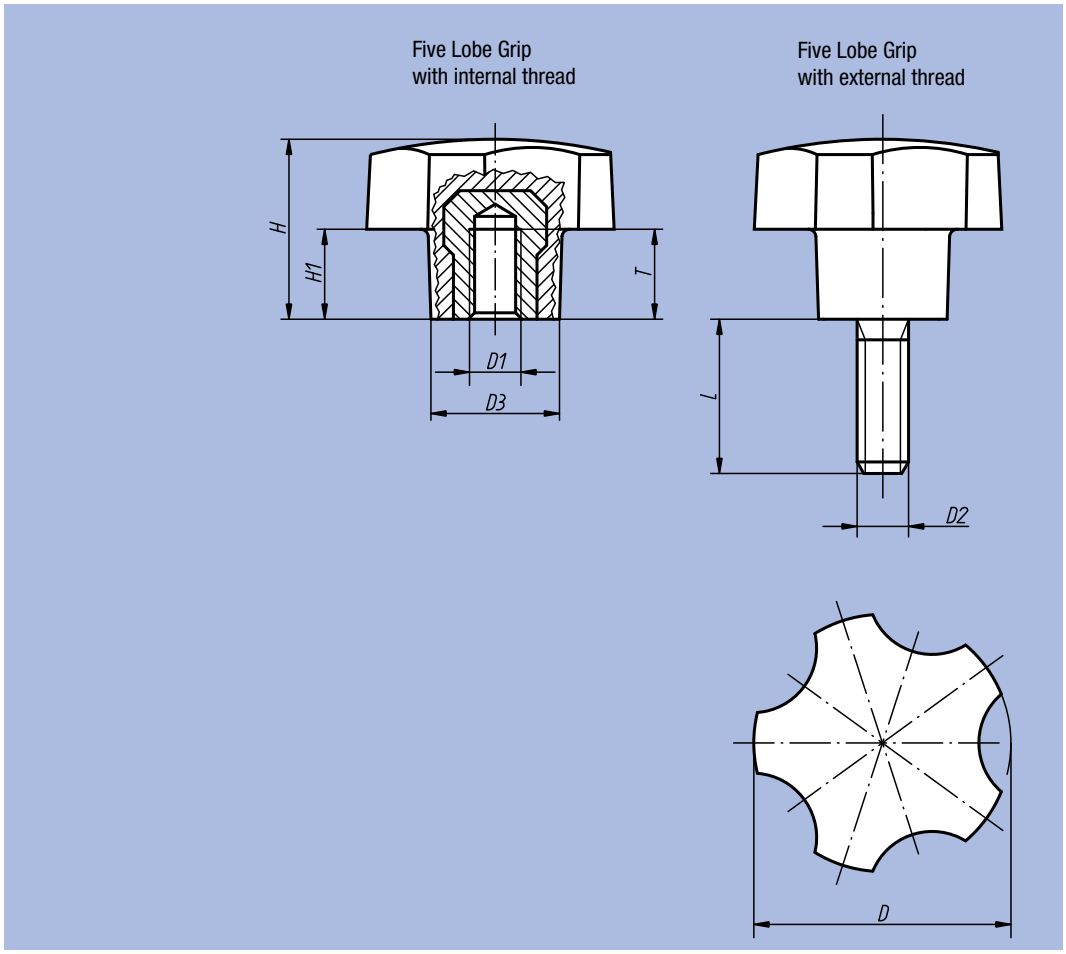

Order No.	Surface finish	D	D1	D3	H	H1	T
06850-3205	internal thread	32	M5	16	22,4	11,2	10
06850-3206	internal thread	32	M6	16	22,4	11,2	9
06850-4006	internal thread	40	M6	20	28	14	12
06850-4008	internal thread	40	M8	20	28	14	14
06850-4010	internal thread	40	M10	20	28	14	14
06850-5008	internal thread	50	M8	25	35	17,5	14
06850-5010	internal thread	50	M10	25	35	17,5	14

Order No.	Surface finish	D	D2	D3	H	H1	L = screw length
06850-3206X	external thread	32	M6	16	22,4	11,2	12 / 18
06850-3208X	external thread	32	M8	16	22,4	11,2	16 / 24
06850-4006X	external thread	40	M6	20	28	14	18
06850-4008X	external thread	40	M8	20	28	14	16 / 20 / 24
06850-4010X	external thread	40	M10	20	28	14	30
06850-5008X	external thread	50	M8	25	35	17,5	16 / 24
06850-5010X	external thread	50	M10	25	35	17,5	20 / 30

Ripped Grips



Material, surface finish:
Anthracite grey thermoplastic,
bush and threaded bolt in steel 5.8,
blue chromated

Sample order:
nlm 06853-3206

Ripped Grip
with internal thread

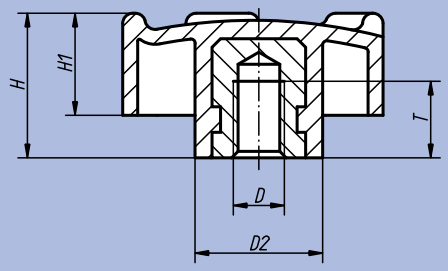

Ripped Grip
with external thread

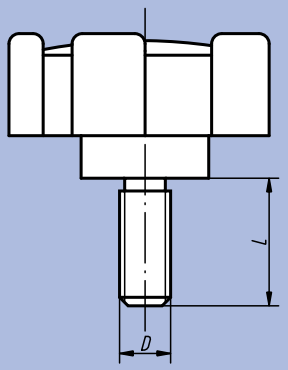

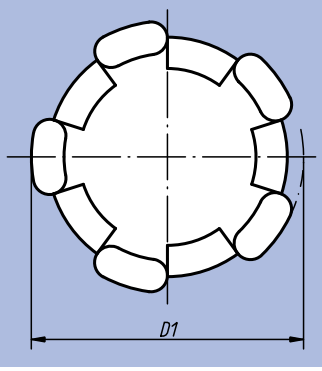

Order No.	Surface finish	Size	D	D1	D2	H	H1	T
06853-3206	internal thread	1	M6	32	15	17	12	9
06853-4008	internal thread	2	M8	40	18	20,5	14,5	11
06853-5010	internal thread	3	M10	50	20	25	18	14

Order No.	Surface finish	Size	D	D1	D2	H	H1	L
06853-320615	external thread	1	M6	32	15	17	12	15
06853-400816	external thread	2	M8	40	18	20,5	14,5	16
06853-501020	external thread	3	M10	50	20	25	18	20

Stirrup-Shaped Handles



Material:
GJS 400.
Surface finish:
Deburred and tumbled;
black plastic-coated;
contact surfaces machined
Sample order:
nlm 06895-12510

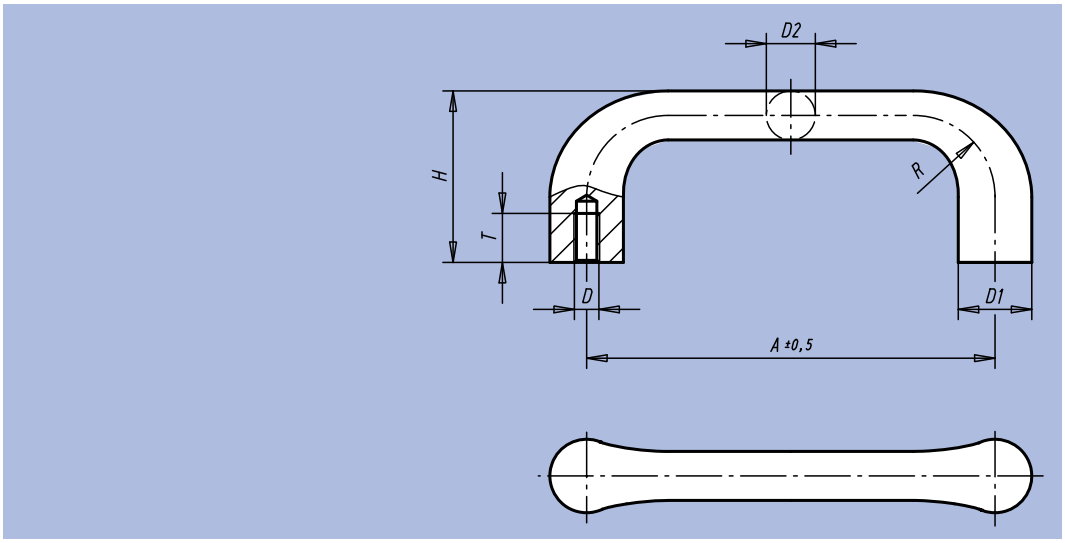

Order No. Surface finish tumbled	Order No. Surface finish tumbled black plastic-coated	A	D	D1	D2	H	R	T	Load bearing capacity N
06895-10006	06895-100061	100	M6	18	12	42	20	12	1000
06895-11208	06895-112081	112	M8	20	14	47	22	15	1000
06895-12510	06895-125101	125	M10	22	16	53	24	18	1000
06895-14012	06895-140121	140	M12	25	18	59	26	20	1000

Stirrup-Shaped Handles

in duroplastic



Material:
Black duroplastic PF 31;
bush in brass or in galvanized steel
Surface finish:
Deburred and high-polish finish
Sample order:
nlm 06900-101

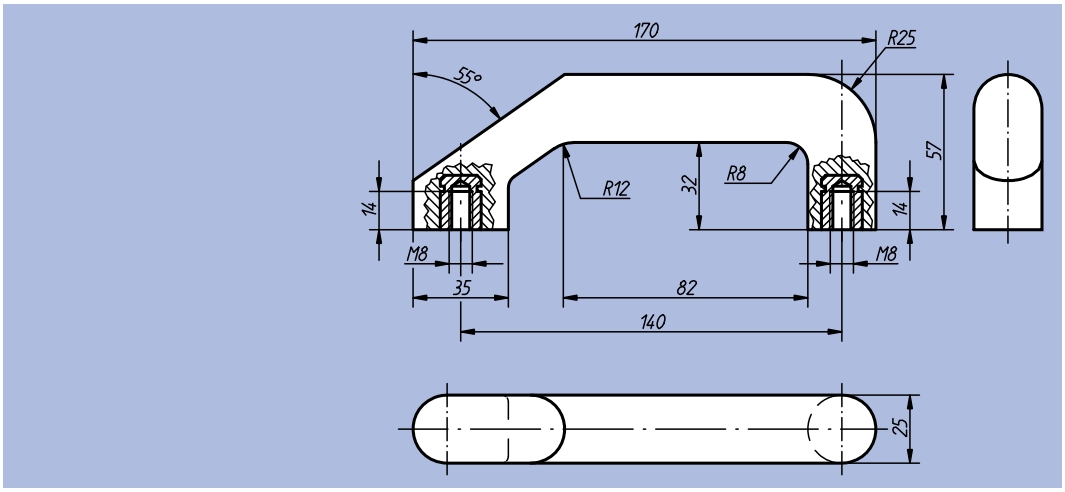

Order No.	Bush material	Load bearing capacity N	kg
06900-101	brass	300	0,180
06900-201	galvanized steel	300	0,180

Stirrup-Shaped Handles



Material:
Aluminium chill casting EN AW-5754

Surface finish:
Surface vibration ground, black powder-coated or vibration ground, rough

Sample order:
nlm 06900-140066

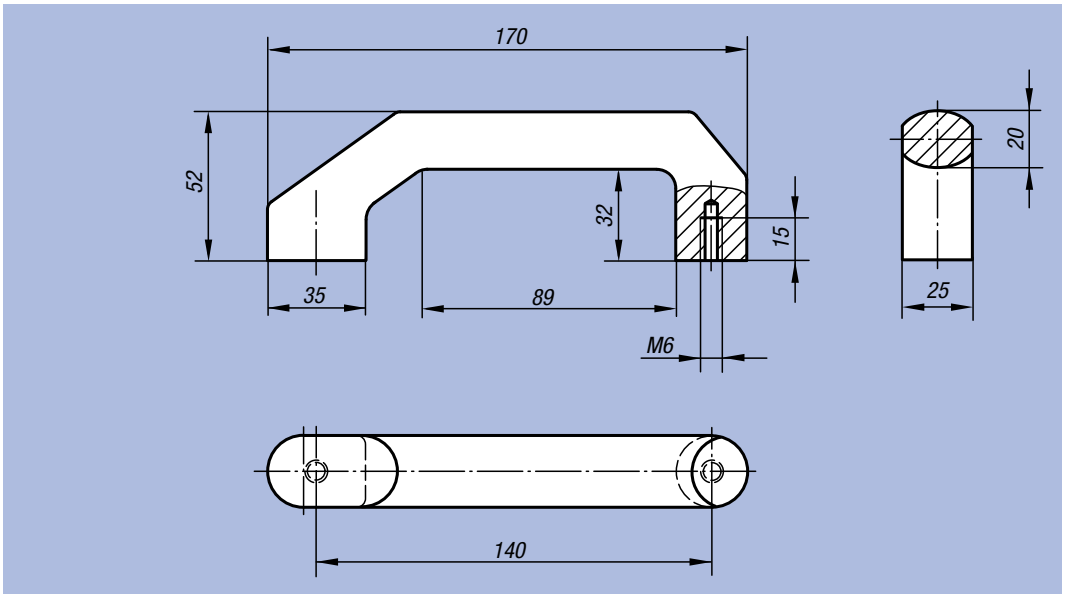

Order No.	Surface finish	Load bearing capacity N	kg
06900-140066	black powder-coated	1000	0,260
06900-140067	natural finish	1000	0,260

Stirrup-Shaped Handles

in duroplastic



Material:
Black duroplastic PF 31;
bush in brass or in galvanized steel

Surface finish:
Deburred and high-polish finish

Sample order:
nlm 06901-114008

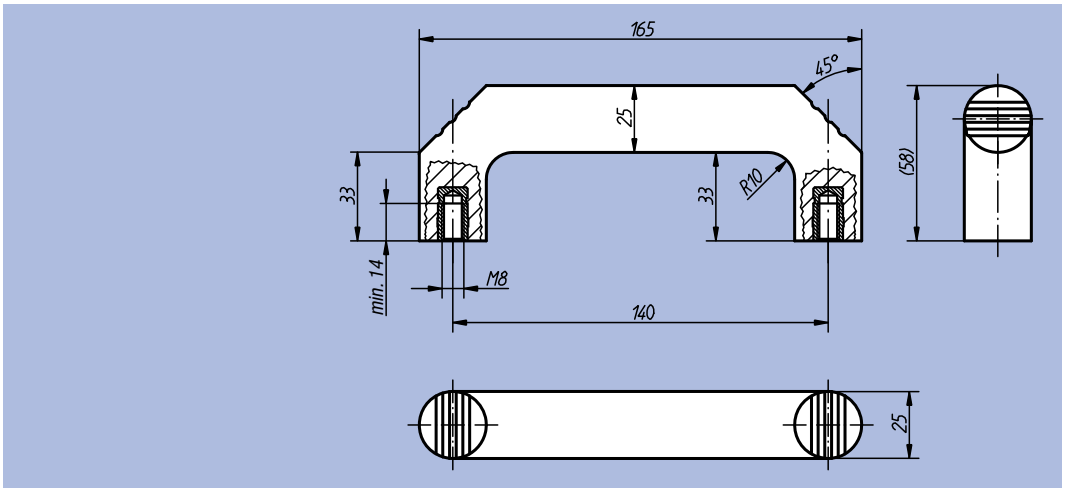

Order No.	Bush material	Load bearing capacity N	kg
06901-114008	brass	500	0,180
06901-214008	galvanized steel	500	0,180

Stirrup-Shaped Handles

in thermoplastic



Material:
Thermoplastic;
bush in brass

Surface finish:
Handle and handle cap in black

Sample order:
nlm 06902-109406

On request:
Other handle or handle cap colours.

Form A

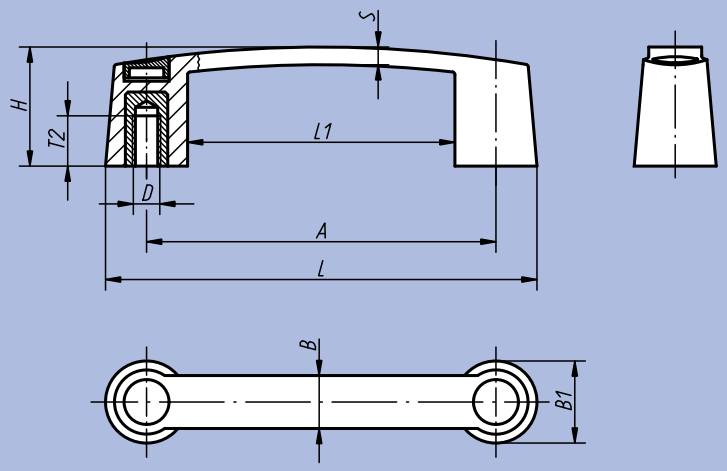

Form B

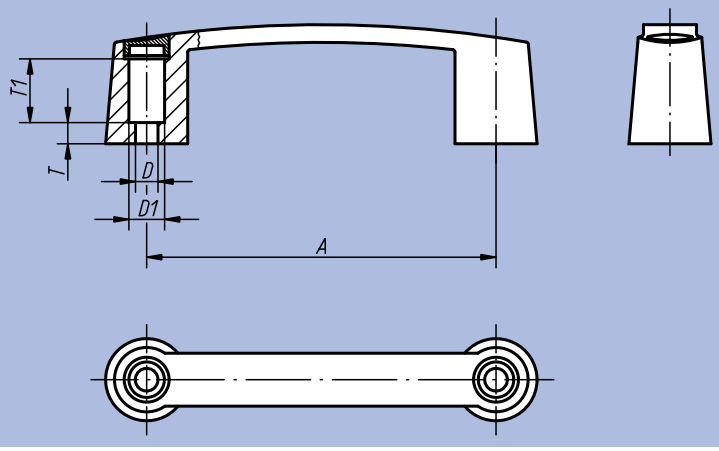

Order No.	Form	A	B	B1	D	D1	H	L	L1	S	T	T1	T2	kg
06902-109406	A	93,5	17	26	M6	-	35	119,5	67,5	5,8	-	-	15,5	0,049
06902-111706	A	117	19	29	M6	-	40	145	89	6,4	-	-	15,5	0,086
06902-111708	A	117	19	29	M8	-	40	145	89	6,4	-	-	16	0,080
06902-113206	A	132	20	31	M6	-	45	163	101	6,7	-	-	15,5	0,098
06902-113208	A	132	20	31	M8	-	45	163	101	6,7	-	-	16	0,091
06902-117910	A	179	22	35	M10	-	50	213	145	7,1	-	-	22	0,147
06902-117912	A	179	22	35	M12	-	50	213	145	7,1	-	-	22	0,135
06902-209406	B	93,5	17	26	6,8	12	35	119,5	67,5	5,8	4,5	19	-	0,032
06902-211708	B	117	19	29	8,5	13,5	40	145	89	6,4	8	23	-	0,041
06902-213208	B	132	20	31	8,5	13,5	45	163	101	6,7	8	22	-	0,059
06902-217908	B	179	22	35	8,5	13,5	50	213	145	7,1	12	22	-	0,087

Stirrup-Shaped Handles

in thermoplastic



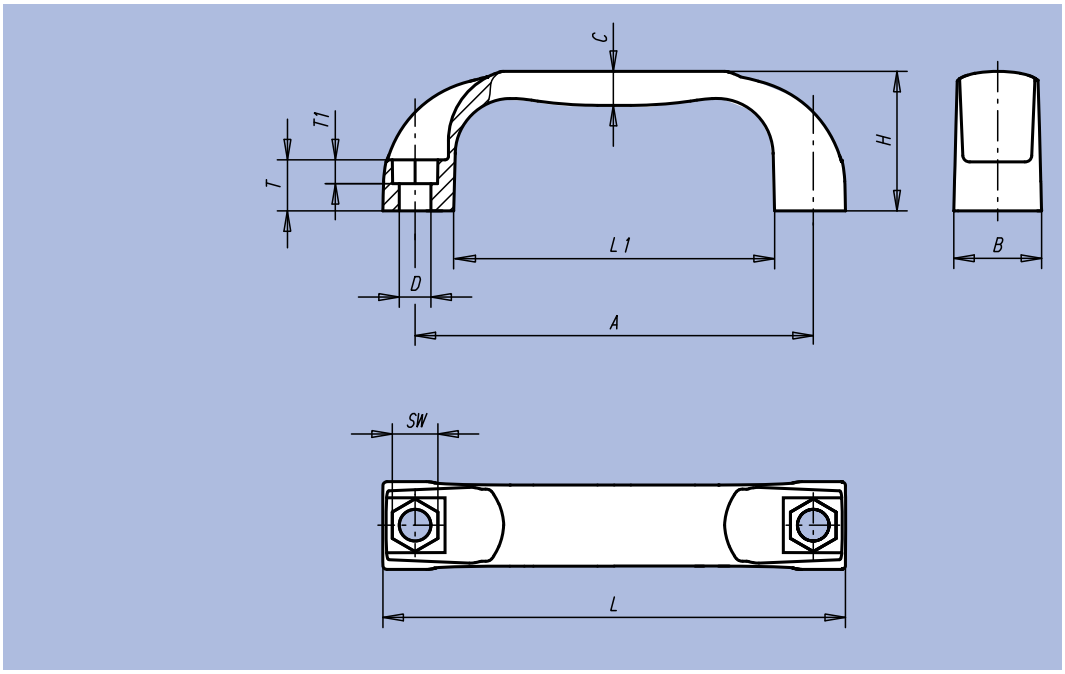

Material:
Thermoplastic PA (polyamide) or PP (polypropylene), glass-ball reinforced

Surface finish:
Anthracite grey

Sample order:
nlm 06903-113208

Note:
The fastening hole is designed in such a way that the Stirrup-Shaped Handles can be secured from the operating side with a socket head screw or a hexagon nut.

On request:
Other handle colours.

Order No.	Surface finish	A	B	C	D	H	L	L1	T	T1	SW	Load bearing capacity N
06903-109406	Thermoplastic PA	94 ±0,5	21	8	6,6	36	109	76	13	6	10	1000
06903-111708	Thermoplastic PA	117 ±0,5	26	10	9	41	136	94	15	8	13	1500
06903-113208	Thermoplastic PA	132 ±0,5	27	11	9	44	154	112	16	8	13	1500
06903-117908	Thermoplastic PA	179 ±1,0	28	11	9	50	197	156	17	8	13	1500
06903-209406	Thermoplastic PP	94 ±0,5	21	8	6,6	36	109	76	13	6	10	500
06903-211708	Thermoplastic PP	117 ±0,5	26	10	9	41	136	94	15	8	13	800
06903-213208	Thermoplastic PP	132 ±0,5	27	11	9	44	154	112	16	8	13	800
06903-217908	Thermoplastic PP	179 ±1,0	28	11	9	50	197	156	17	8	13	800

Stirrup-Shaped Handles



Material:
Glass-ball reinforced thermoplastic

Surface finish:
Matt black or orange

Sample order:
nlm 06904-1120081

Note:
Screw-on dimension „A“ applies according to handle assembly. In the unassembled state, it is up to 2 mm smaller through flexural stress upon demoulding.

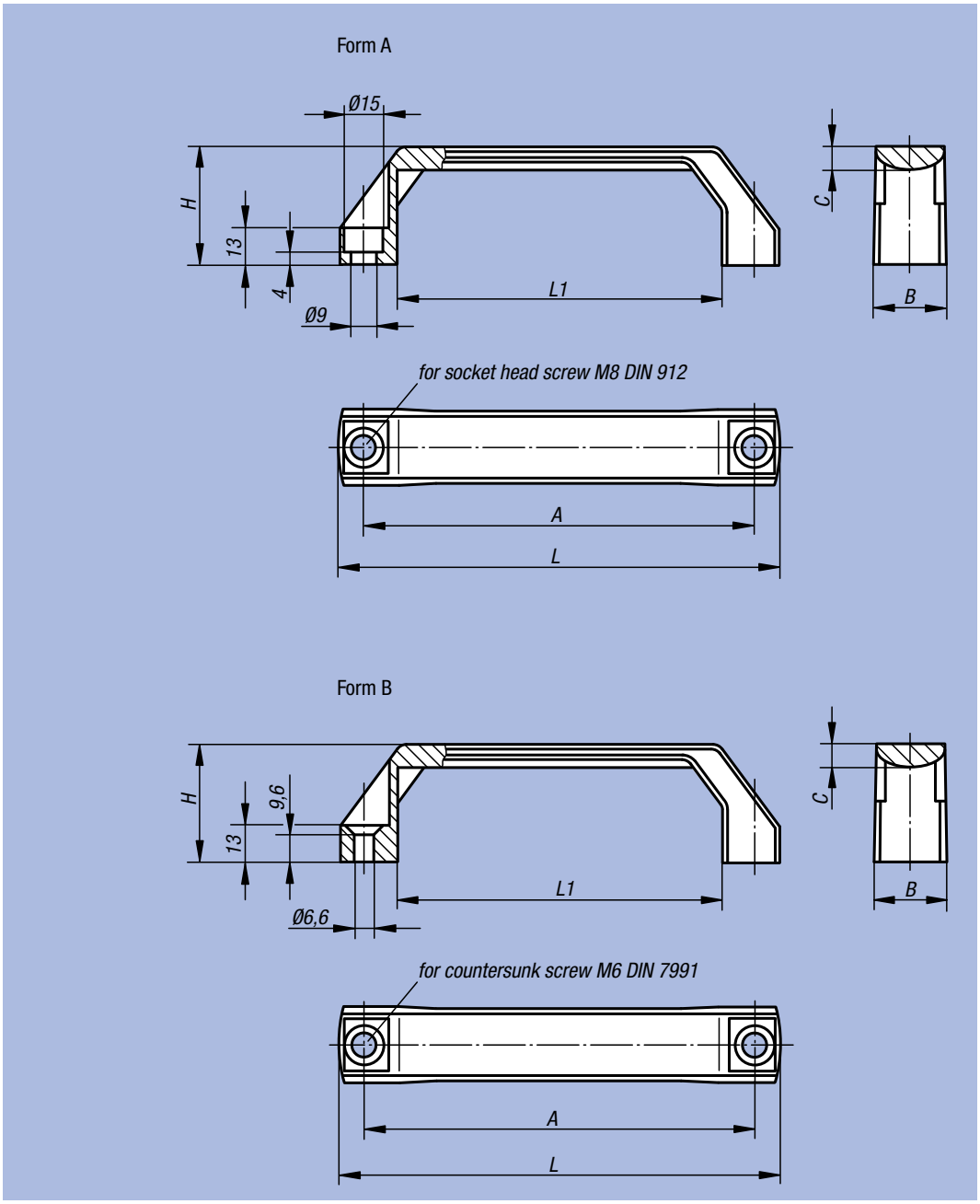

Order No. Colour matt black	Order No. Colour orange	Form	A	B	C	H	L	L1	Load bearing capacity N	kg
06904-1120081	06904-1120082	A	120	26	8	42	138	96	1000	0,053
06904-1140081	06904-1140082	A	140	26	8	42	158	116	1000	0,058
06904-1160081	06904-1160082	A	160	28	9	45	178	136	1000	0,074
06904-2120061	06904-2120062	B	120	26	8	42	138	96	1000	0,056
06904-2140061	06904-2140062	B	140	26	8	42	158	116	1000	0,061
06904-2160061	06904-2160062	B	160	28	9	45	178	136	1000	0,076

Bridge Handle



Material, surface finish:
Anthracite grey thermoplastic

Sample order:
nlm 06909-11406

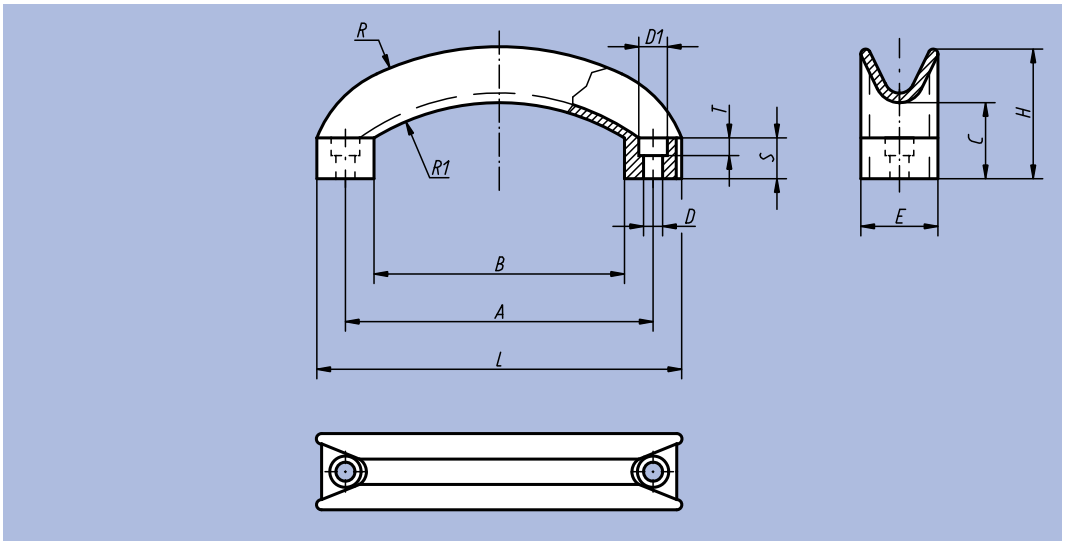

Order No.	D	D1	A	B	C	E	H	L	R	R1	S	T	kg
06909-11406	6,5	10,5	114	92	29	28	48	134	117	79	15	6,5	0,037

Stirrup-Shaped Handles

in aluminium



Material:
Profile aluminium EN AW-6060

Surface finish:
High quality anodized model,
glass-ball blasted, semi-matt finish

Sample order:
nlm 06910-120061

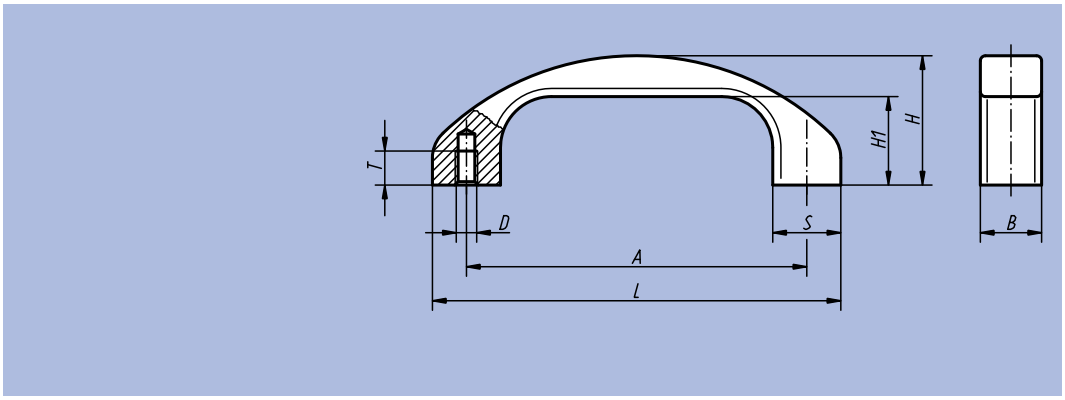

Order No.	Surface finish	A	B	D	H	H1	L	S	T	Load bearing capacity N	kg
06910-120061	black anodized	120	22	M6	46	31	144	24	12	1000	0,145
06910-140081	black anodized	140	25	M8	53	36	168	28	15	1000	0,220
06910-120063	natural colour anodized	120	22	M6	46	31	144	24	12	1000	0,145
06910-140083	natural colour anodized	140	25	M8	53	36	168	28	15	1000	0,220

Stirrup Handle



Material, surface finish:
Anthracite grey thermoplastic;
bush in steel 5.8, blue chromated

Sample order:
nlm 06911-11906

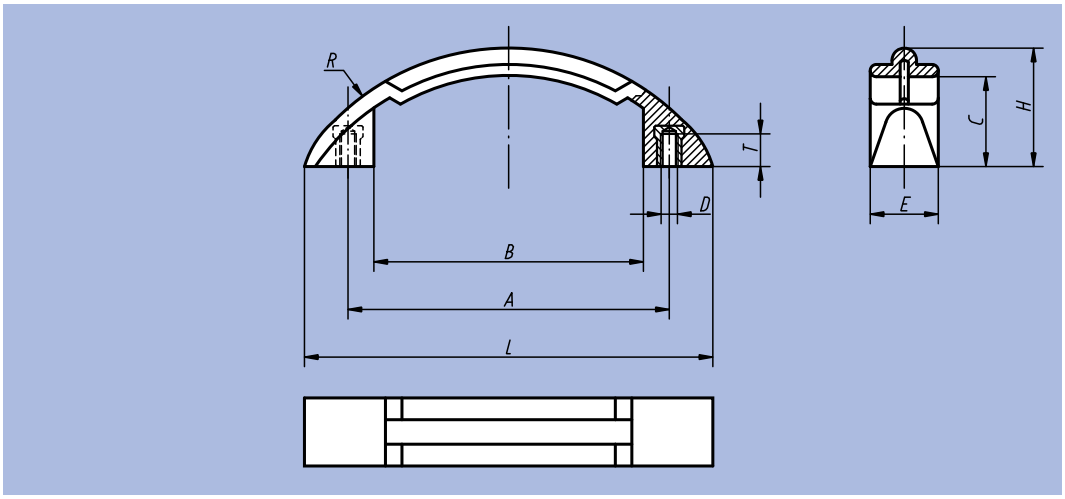

Order No.	D	A	B	C	E	H	L	R	T	kg
06911-11906	M6	119	98	33	25	43,5	150	94	10	0,045

Slanting Stirrup-Shaped Handles



Material:
Grip in glass-ball reinforced thermoplastic; threaded bush in brass

Surface finish:
Matt black or light grey

Sample order:
nlm 06912-140061

Note:
Slant compact polyamide handle. Handle tube and handle foot are one unit. With its slanted contact surfaces, assembly is also possible under cramped spacial conditions.

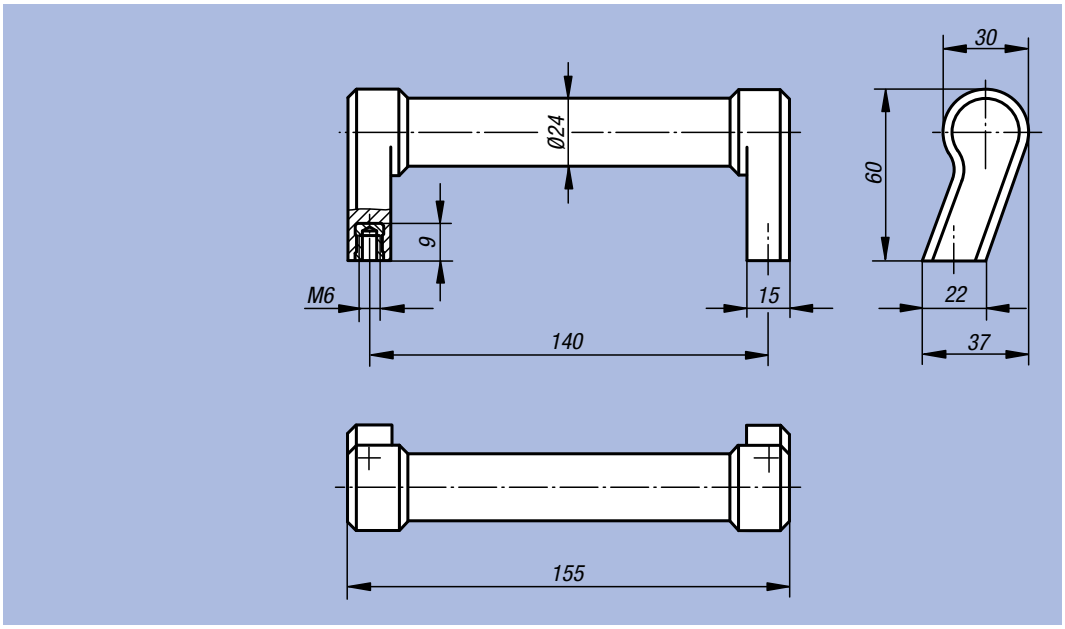

Order No.	Colour	Load bearing capacity N	kg
06912-140061	matt black	1000	0,148
06912-140062	light grey	1000	0,148

Stirrup-Shaped Handles

with soft inner surface



Material:
Hard component in glass-ball reinforced thermoplastic; soft component in SEBS

Surface finish:
Hard component matt black; soft component basalt grey

Sample order:
nlm 06913-515008

Note:
Heavy-duty polyamide handle. Excellent carrying and gripping comfort thanks to its soft inner surface.
Black galvanized cylindrical screws, nuts and washers are supplied.
For wet areas, the fastening material is supplied in refined steel (1.4301).

On request:
With and without individual inscription, embossed or raised. Hard component and soft component are available in all RAL colours.

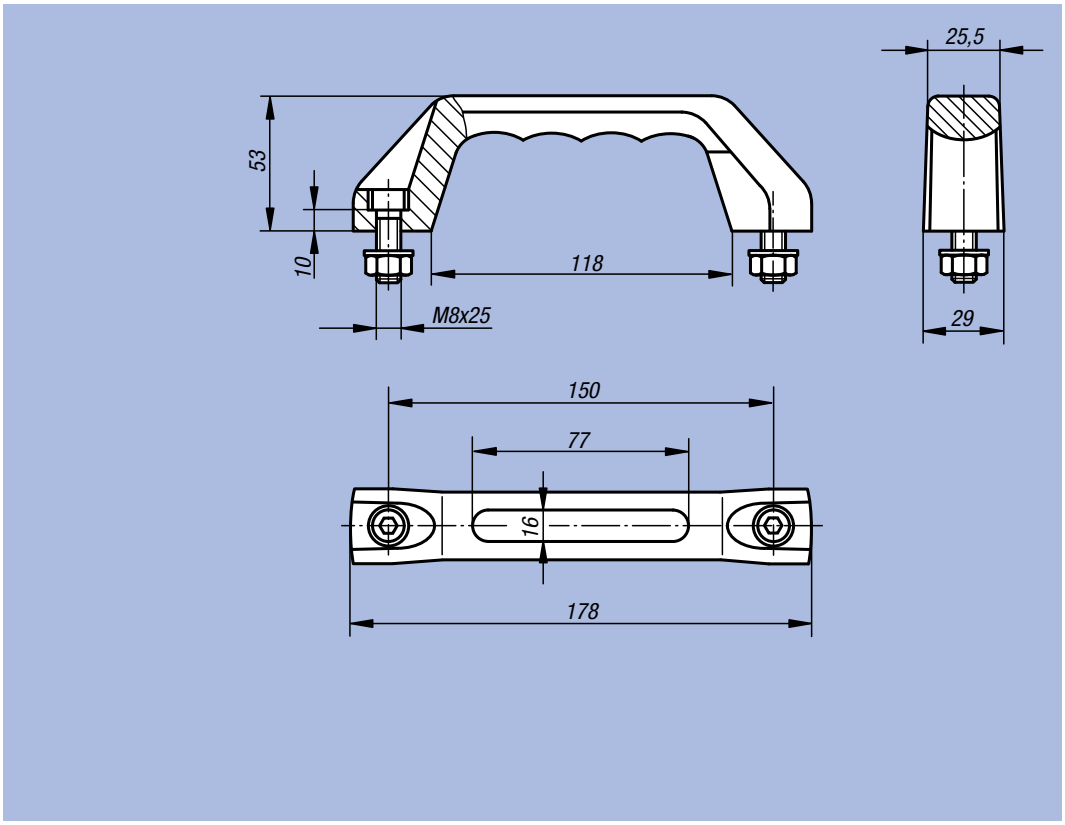

Order No.	Surface finish	Load bearing capacity N	kg
06913-515008	-	500	0,186
06913-615008	for wet areas	500	0,186

Stirrup-Shaped Handles

in stainless steel





Material:
Refined steel precision cast 1.4308;
fastening material 1.4301

Surface finish:
Blasted and electro-polished with
matt-gloss finish

Sample order:
nlm 06914-140081

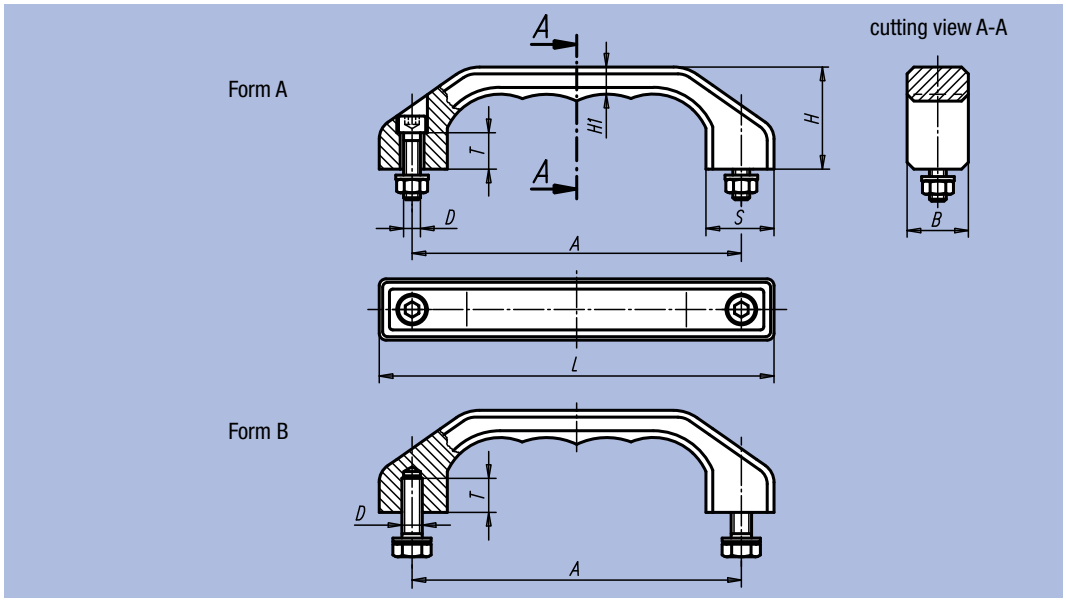

Order No.	Form	A	B	D	H	H1	L	S	T	Load bearing capacity N	kg
06914-140081	A	140	25	M8x30	45	12	170	28	15	1000	0,550
06914-180101	A	180	32	M10x40	58	15	218	36	18	1000	1,460
06914-140082	B	140	25	M8x18	45	12	170	28	15	1000	0,550
06914-180102	B	180	32	M10x20	58	15	218	36	18	1000	1,460

Stirrup-Shaped Handles

in aluminium



Material:
EN AW-6060.

Surface finish:
Matt-finished and anodised
or powder-coated

Sample order:
nlm 06915-140082

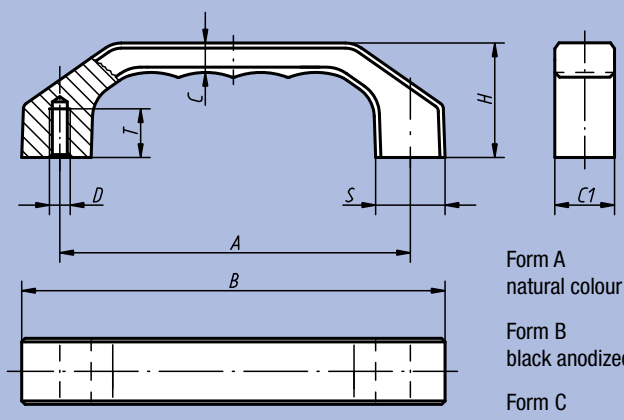

Form A
natural colour anodized

Form B
black anodized

Form C
titanium colour powder-coatet

Order No. Form A	Order No. Form B	Order No. Form C	A	B	C	C1	D	H	S	T	Load bearing capacity N	kg
06915-120061	06915-120062	06915-120063	120	146	10,5	22	M6	39	24	15	1000	0,127
06915-140081	06915-140082	06915-140083	140	170	12	25	M8	45	28	16	1000	0,193
06915-160081	06915-160082	06915-160083	160	194	13,5	28	M8	52	32	16	1000	0,293

Stirrup-Shaped Handles

in thermoplastic



Material, surface finish:
Glass-ball reinforced thermoplastic; matt black with fine texture

Sample order:
nlm 06916-140082

Note:
These handles possess extreme torsional strength and are highly operator friendly. Fastening screws, nuts and flat washers are supplied. For wet areas, the fastening screws, nuts and flat washers are supplied in refined steel.

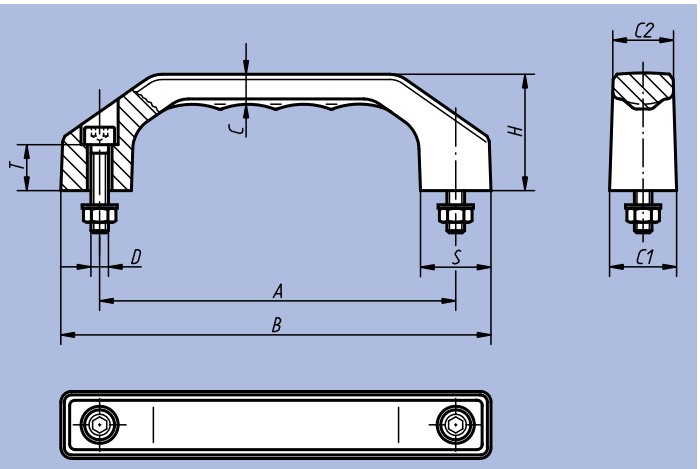

Order No.	Order No. Surface finish for wet areas	A	B	C	C1	C2	D	H	S	T	Load bearing capacity N	kg
06916-100051	06916-100052	100	122	8,5	19	17	M5x22	33	20	13	1000	0,049
06916-120061	06916-120062	120	146	10,5	23	20,5	M6x25	39	24	15	1000	0,088
06916-140081	06916-140082	140	170	12	27	24	M8x30	45	28	16	1000	0,158
06916-160081	06916-160082	160	194	13,5	31	27,5	M8x35	52	32	20	1000	0,212
06916-180081	06916-180082	180	218	15,5	35	31	M10x40	58	36	20	1000	0,350

Notes:

Stirrup-Shaped Handles round



Suitable for 19" technology

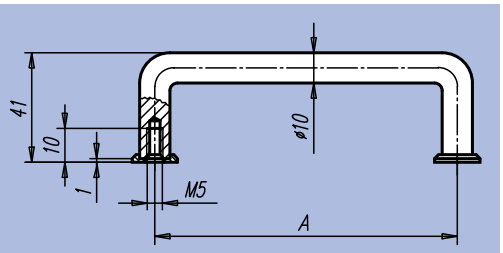

Material:
Round aluminium

Surface finish:
Surface matt-finished and natural colour or black anodized

Sample order:
nlm 06917-055051

Note:
End washers not included.

Order No.	Surface finish	A	Load bearing capacity N	kg	Order No. End washer
06917-055051	black anodized	55	500	0,023	06917-1
06917-088051	black anodized	88	500	0,029	06917-1
06917-100051	black anodized	100	500	0,032	06917-1
06917-120051	black anodized	120	500	0,037	06917-1
06917-180051	black anodized	180	500	0,049	06917-1
06917-200051	black anodized	200	500	0,053	06917-1
06917-235051	black anodized	235	500	0,063	06917-1
06917-250051	black anodized	250	500	0,067	06917-1
06917-055053	natural colour anodized	55	500	0,023	06917-3
06917-088053	natural colour anodized	88	500	0,029	06917-3
06917-100053	natural colour anodized	100	500	0,032	06917-3
06917-120053	natural colour anodized	120	500	0,037	06917-3
06917-180053	natural colour anodized	180	500	0,049	06917-3
06917-200053	natural colour anodized	200	500	0,053	06917-3
06917-235053	natural colour anodized	235	500	0,063	06917-3
06917-250053	natural colour anodized	250	500	0,067	06917-3

Oval Bow Handles



Material:
Oval aluminium.

Surface finish:
Surface matt-finished and natural colour anodized or black anodized

Sample order:
nlm 06918-055051

Suitable for 19" technology

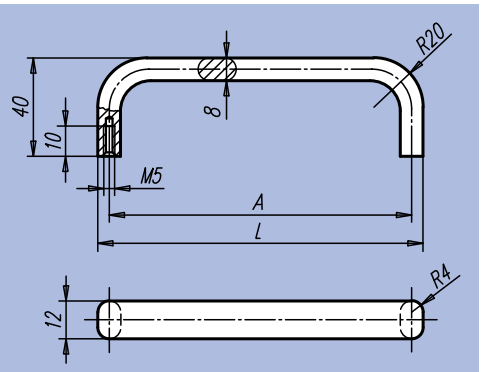

Order No. Surface finish black anodized	Order No. Surface finish natural colour anodized	A	L	Load bearing capacity N	kg
06918-055051	06918-055053	55	63	500	0,024
06918-088051	06918-088053	88	96	500	0,030
06918-100051	06918-100053	100	108	500	0,032
06918-120051	06918-120053	120	128	500	0,037
06918-180051	06918-180053	180	188	500	0,050
06918-200051	06918-200053	200	208	500	0,055
06918-235051	06918-235053	235	243	500	0,064
06918-250051	06918-250053	250	258	500	0,068

Stirrup-Shaped Handles round



Material:
Round steel.

Surface finish:
Surface very finely ground and matt-polish chromium-plated; connecting bridge with plastic coating

Sample order:
nlm 06919-05505

Note:
High quality handles for front panels and similar applications.

Suitable for 19" technology

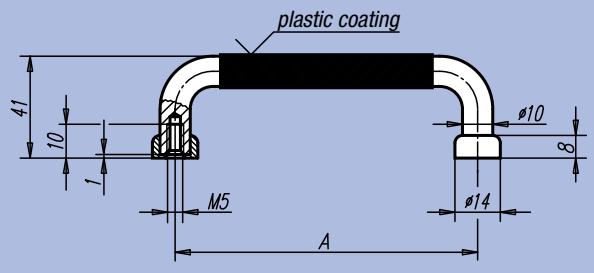

Order No.	A	Load bearing capacity N	kg
06919-05505	55	1000	0,075
06919-08805	88	1000	0,097
06919-10005	100	1000	0,105
06919-10205	102	1000	0,106
06919-11505	115	1000	0,114
06919-12005	120	1000	0,118
06919-13605	136	1000	0,128
06919-18005	180	1000	0,157
06919-20005	200	1000	0,170
06919-23505	235	1000	0,193
06919-25005	250	1000	0,203

Oval Bow Handles



Material:
Oval aluminium EN AW-6060

Surface finish:
Black powder-coated,
natural colour anodized

Sample order:
nlm 06920-10001

Note:
These Oval Bow Handles are extremely robust and can also be used in any situation where powerful operation is required.

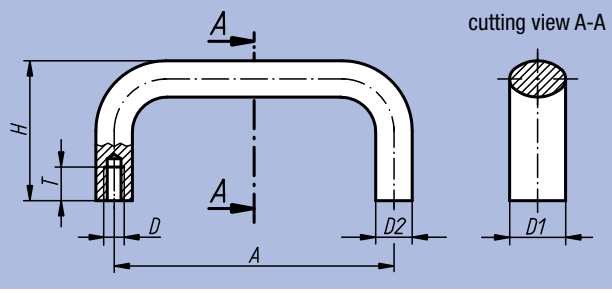

Order No. Surface finish black powder-coated	Order No. Surface finish natural colour anodized	A	D	D1	D2	H	T	Load bearing capacity N	kg
06920-10001	06920-10003	100	M6	20	13	50	12	1000	0,090
06920-11201	06920-11203	112	M6	20	13	50	12	1000	0,095
06920-12001	06920-12003	120	M6	20	13	50	12	1000	0,100
06920-12801	06920-12803	128	M6	20	13	50	12	1000	0,120
06920-1600106	06920-1600306	160	M6	20	13	50	12	1000	0,119
06920-1120108	06920-1120308	112	M8	26	17	55	14	1000	0,167
06920-1200108	06920-1200308	120	M8	26	17	55	14	1000	0,174
06920-1280108	06920-1280308	128	M8	26	17	55	14	1000	0,181
06920-16001	06920-16003	160	M8	26	17	55	14	1000	0,208
06920-18001	06920-18003	180	M8	26	17	55	14	1000	0,226
06920-19201	06920-19203	192	M8	26	17	55	14	1000	0,245
06920-35001	06920-35003	350	M8	26	17	55	14	1000	0,382

Flat Profile Bow Handles



Material:
Profile aluminium EN AW-6060

Surface finish:
Matt-finished, black or natural colour anodized

Sample order:
nlm 06921-18001

Note:
These elegant Flat Profile Bow Handles made of aluminium are especially suitable for machines, appliances, apparatuses, jigs and fixtures, etc.

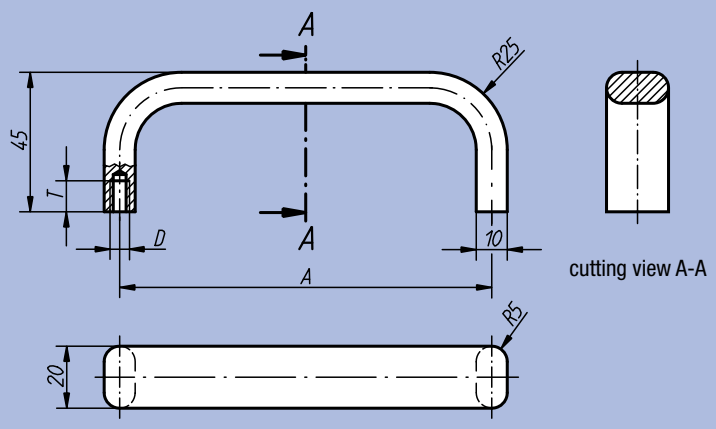

Order No. Surface finish black anodized	Order No. Surface finish natural colour anodized	A	D	T	Load bearing capacity N	kg
06921-12001	06921-12003	120	M5	10	500	0,085
06921-18001	06921-18003	180	M5	10	500	0,100
06921-20001	06921-20003	200	M5	10	500	0,120
06921-35001	06921-35003	350	M6	12	500	0,190

Bow Handles

in stainless steel



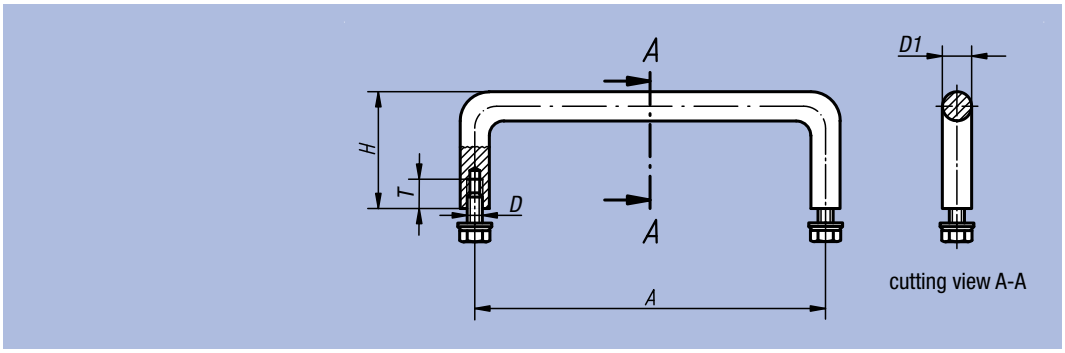

Material:
Bow Handle in stainless steel 1.4305; fastening material 1.4301

Surface finish:
Electrolytic-polish

Sample order:
nlm 06922-120

Note:
Bow Handles in stainless steel are used mainly for installations in the food industry and in the fields of medical, laboratory and reactor technology.

Order No.	A	D	D1	H	T	Load bearing capacity N	kg
06922-100	100	M5x10	8	35	10	1000	0,060
06922-120	120	M5x10	10	40	10	1000	0,100
06922-250	250	M5x10	10	40	10	1000	0,185
06922-350	350	M5x10	10	40	10	1000	0,250

Angled Machine Handles



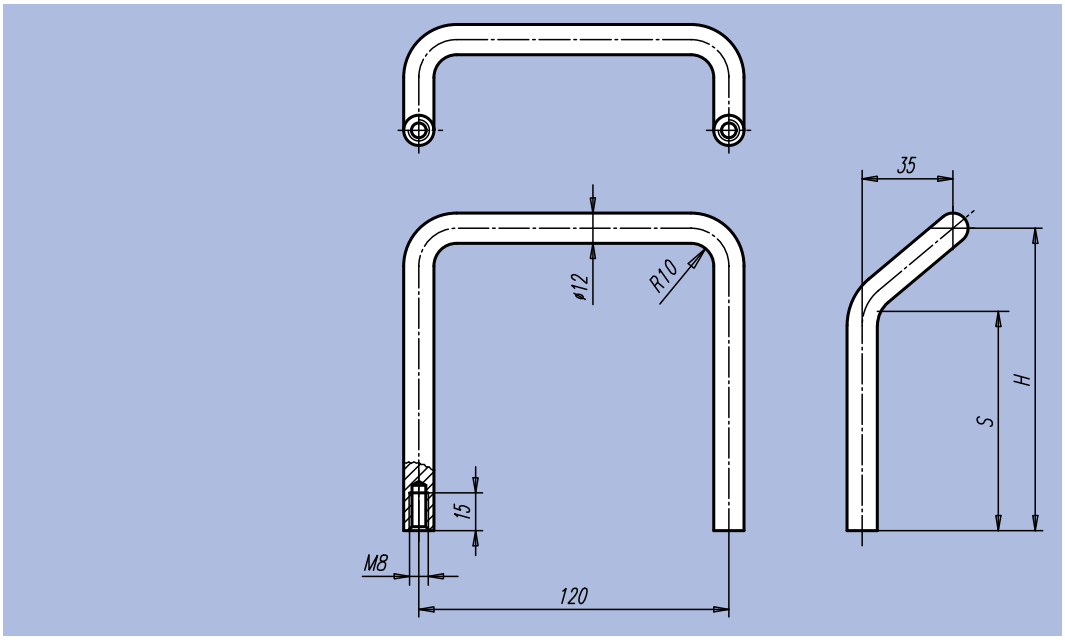

Material:
Round steel.

Surface finish:
Very finely ground and high-polish chromium-plated

Sample order:
nlm 06923-06008

Order No.	H	S	Load bearing capacity N	kg
06923-06008	60	27	1000	0,190
06923-12008	120	87	1000	0,287

Stirrup-Shaped Handles in stainless steel



Material:
Stirrup-shaped handle in stainless steel 1.4305; fastening material 1.4301

Surface finish:
Surface semi-matt finish, vibration ground

Sample order:
nlm 06924-10005

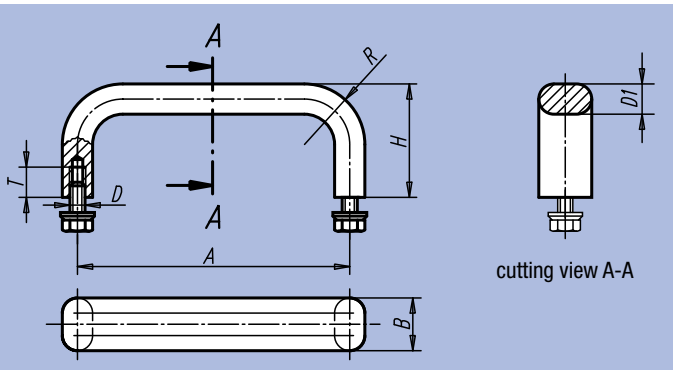

Order No.	A	B	D	D1	H	R	T	Load bearing capacity N	kg
06924-10005	100	12	M5x10	8	40	22	10	1000	0,105
06924-12005	120	12	M5x10	8	40	22	10	1000	0,118
06924-15005	150	12	M5x10	8	40	22	10	1000	0,138
06924-18005	180	12	M5x10	8	40	22	10	1000	0,158
06924-25005	250	12	M5x10	8	40	22	10	1000	0,205
06924-10006	100	19,5	M6x12	10	45	24	12	1000	0,216
06924-12006	120	19,5	M6x12	10	45	24	12	1000	0,241
06924-15006	150	19,5	M6x12	10	45	24	12	1000	0,279
06924-18006	180	19,5	M6x12	10	45	24	12	1000	0,318
06924-25006	250	19,5	M6x12	10	45	24	12	1000	0,407

All-Purpose Machine Handles



Material:
Aluminium.

Surface finish:
Grip leg black powder-coated; connecting bridge natural colour anodized

Sample order:
nlm 06925-300

Note:
Black galvanized fastening screws with hexagon socket M12x70 as well as suitable washers and nuts are supplied.

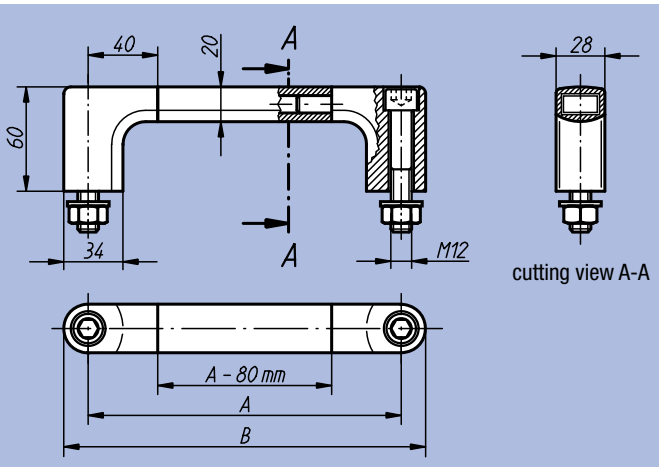

Order No.	A	B	Load bearing capacity N	kg
06925-180	180	208	1000	0,552
06925-200	200	228	1000	0,575
06925-250	250	278	1000	0,620
06925-300	300	328	1000	0,695
06925-350	350	378	1000	0,732
06925-400	400	428	1000	0,758
06925-500	500	528	1000	0,815
06925-600	600	628	1000	0,895

Lightweight Handles



Material:
Grip legs in black glass-ball reinforced thermoplastic;
connecting tube aluminium

Sample order:
nlm 06926-200

Note:
The grip legs have 4 clamping webs within the area of the tube receiver. When pushing the connecting tube in, they are abraded and produce a seat with a precise fit.
Black galvanized fastening screws, as well as suitable washers and nuts are supplied.

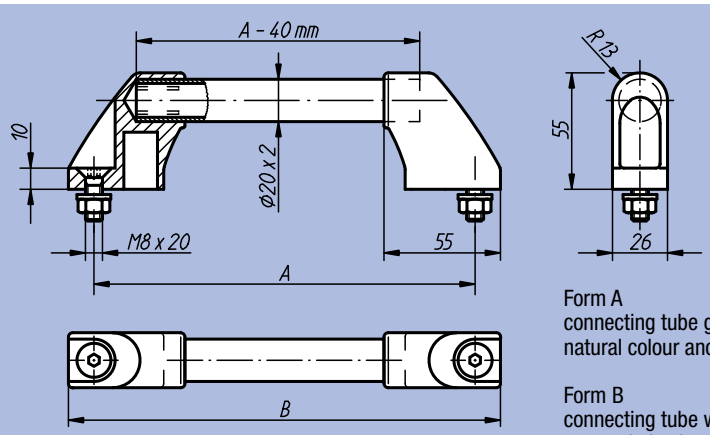

Form A
connecting tube ground and natural colour anodized

Form B
connecting tube with serrated plastic coating

Order No. Form A	Order No. Form B	A	B	Load bearing capacity N	kg
06926-180	06926-1803	180	204	500	0,165
06926-200	06926-2003	200	224	500	0,175
06926-250	06926-2503	250	274	500	0,185
06926-300	06926-3003	300	324	500	0,200
06926-350	06926-3503	350	374	500	0,210
06926-400	06926-4003	400	424	500	0,220
06926-500	06926-5003	500	524	500	0,245
06926-600	06926-6003	600	624	500	0,270

Notes:

Tube Handles



Material:
Connecting bridge in aluminium EN AW-6060;
grip leg in polyamide glass-ball reinforced;
threaded bush in brass;
clamping sleeves in stainless steel

Surface finish:
Connecting bridge natural colour or black anodized;
grip leg aluminium colour or black

Sample order:
nlm 06927-1200081

Note:
Pluggable oval-profile handles. Models with plastic legs and aluminium oval bridge.

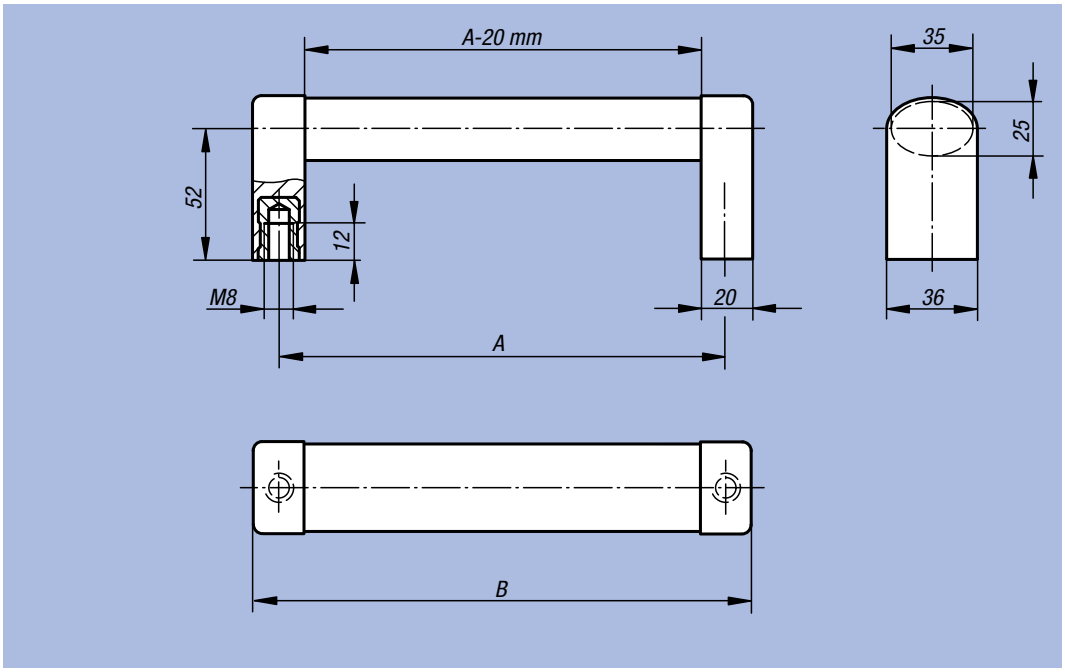

Order No. Surface finish connecting bridge natural colour anodized, grip leg aluminium colour	Order No. Surface finish connecting bridge natural colour anodized, grip leg black	Order No. Surface finish connecting bridge black anodized, grip leg black	A	B	Load bearing capacity N	kg
06927-1200081	06927-1200082	06927-1200083	200	220	1000	0,255
06927-1250081	06927-1250082	06927-1250083	250	270	1000	0,295
06927-1300081	06927-1300082	06927-1300083	300	320	1000	0,334
06927-1400081	06927-1400082	06927-1400083	400	420	1000	0,414
06927-1500081	06927-1500082	06927-1500083	500	520	1000	0,493

Slanting Tube Handles



Material:
Connecting tube in aluminium EN AW-6060 or stainless steel 1.4301; grip leg in polyamide, glass-ball reinforced;
threaded bush in brass

Surface finish:
Connecting tube matt-polished anodized or stainless steel finely ground;
grip leg aluminium colour or black

Sample order:
nlm 06928-2150061

Note:
Slanting Tube Handles in modern industrial design. Precision fit of tube on plastic tenon due to clamping webs.

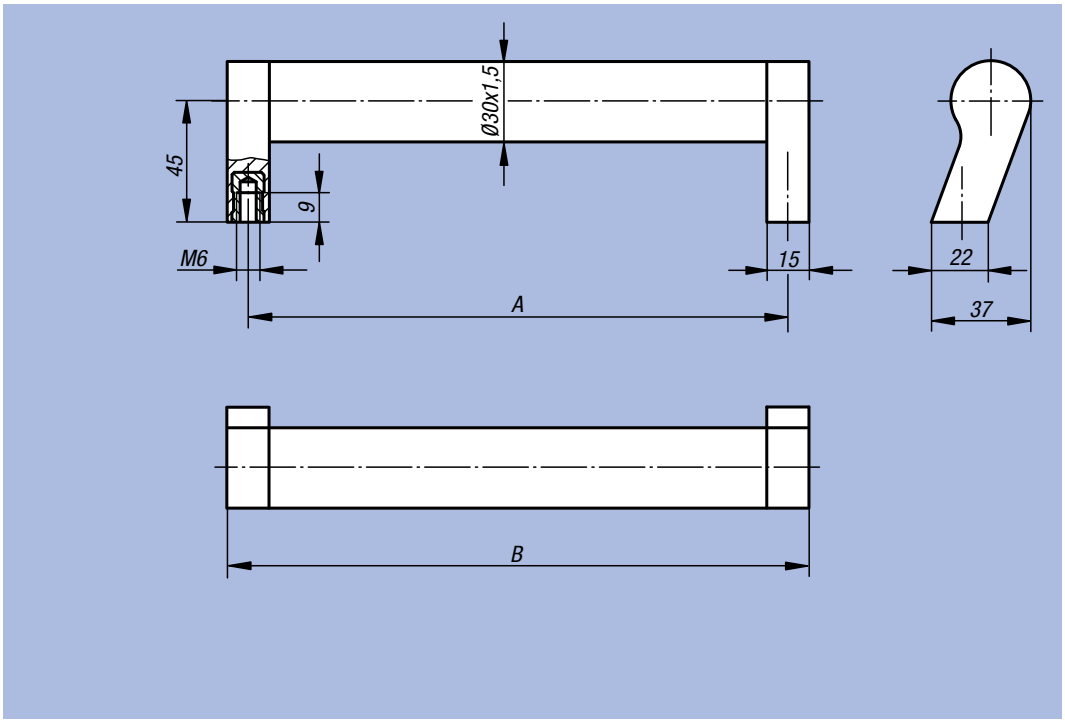

Order No.	Surface finish	A	B	Load bearing capacity N	kg
06928-2150061	connecting tube aluminium anodized, grip leg black	150	165	800	0,112
06928-2200061	connecting tube aluminium anodized, grip leg black	200	215	800	0,130
06928-2250061	connecting tube aluminium anodized, grip leg black	250	265	800	0,148
06928-2300061	connecting tube aluminium anodized, grip leg black	300	315	800	0,165
06928-2350061	connecting tube aluminium anodized, grip leg black	350	365	800	0,184
06928-2400061	connecting tube aluminium anodized, grip leg black	400	415	800	0,201
06928-2150062	connecting tube aluminium anodized, grip leg aluminium colour	150	165	800	0,112
06928-2200062	connecting tube aluminium anodized, grip leg aluminium colour	200	215	800	0,130
06928-2250062	connecting tube aluminium anodized, grip leg aluminium colour	250	265	800	0,148
06928-2300062	connecting tube aluminium anodized, grip leg aluminium colour	300	315	800	0,165
06928-2350062	connecting tube aluminium anodized, grip leg aluminium colour	350	365	800	0,184
06928-2400062	connecting tube aluminium anodized, grip leg aluminium colour	400	415	800	0,201
06928-2150063	connecting tube stainless steel, grip leg black	150	165	800	0,208
06928-2200063	connecting tube stainless steel, grip leg black	200	215	800	0,261
06928-2250063	connecting tube stainless steel, grip leg black	250	265	800	0,314
06928-2300063	connecting tube stainless steel, grip leg black	300	315	800	0,367
06928-2350063	connecting tube stainless steel, grip leg black	350	365	800	0,420
06928-2400063	connecting tube stainless steel, grip leg black	400	415	800	0,473

Apparatus Handles



Material:
Profile aluminium EN AW-6060

Surface finish:
Matt-finished, black anodized or natural colour anodized

Sample order:
nlm 06929-12001

Form A

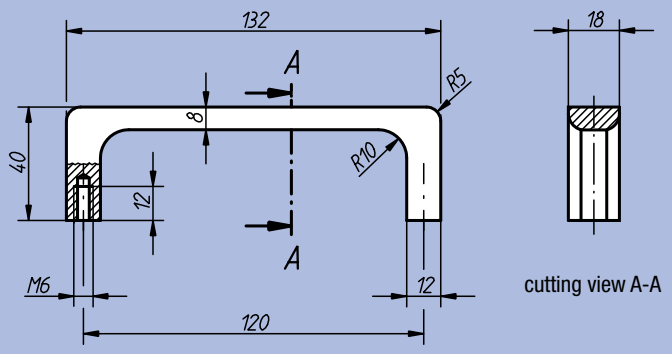

Form B

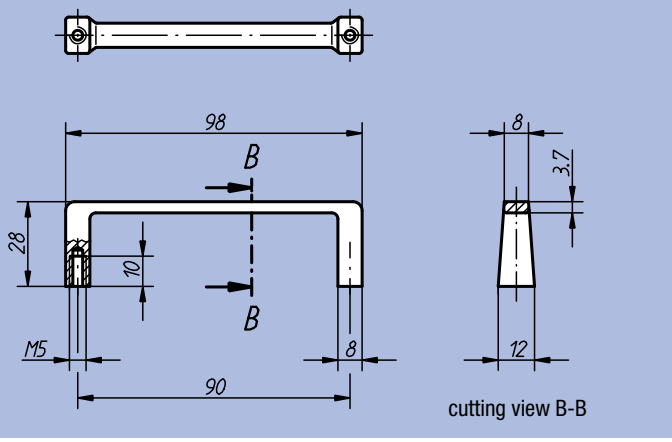

Order No.	Form	Surface finish	Load bearing capacity N	kg
06929-12001	A	black anodized	500	0,070
06929-09001	B	black anodized	300	0,010
06929-12003	A	natural colour anodized	500	0,070
06929-09003	B	natural colour anodized	300	0,010

Bow Handles

high-polish chromium-plated



Material:
Steel.

Surface finish:
Very finely ground and high-polish chromium-plated

Sample order:
nlm 06930-10204

Note:
These Bow Handles are used primarily on optical devices, laboratory installations, audio, video and hi-fi equipment, etc. The bearing washers are supplied unattached.

On request:
Other surface finishes.

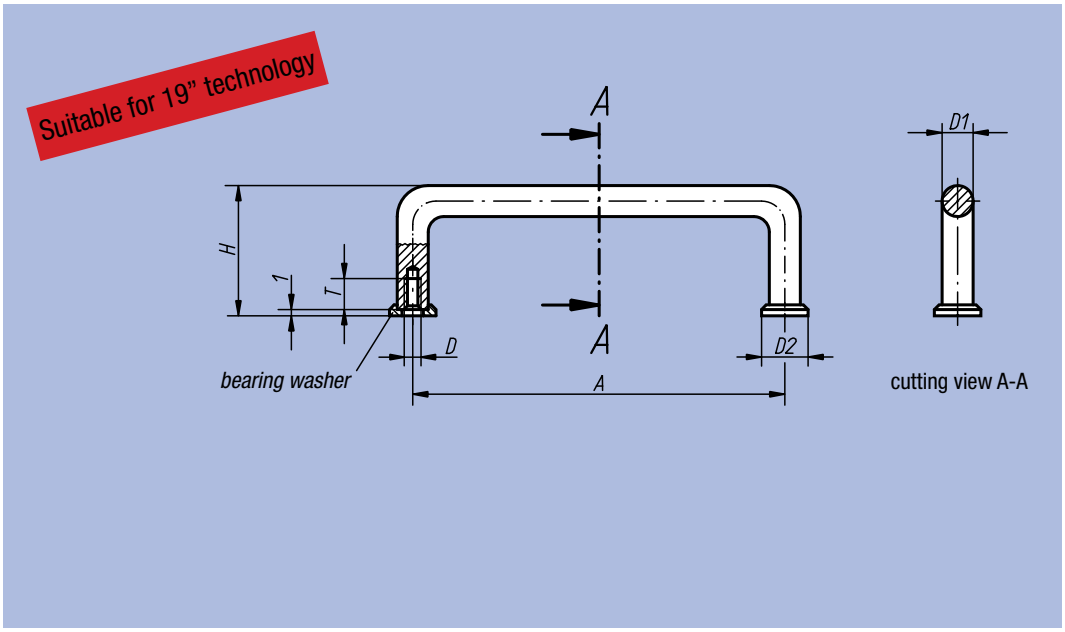

Order No.	A	D	D1	D2	H	T	Load bearing capacity N	kg
06930-03203	32	M3	5	8	21	6	1000	0,008
06930-04203	42	M3	5	8	25	6	1000	0,010
06930-05503	55	M3	5	8	25	6	1000	0,013
06930-07603	76	M3	5	8	25	6	1000	0,015
06930-08803	88	M3	5	8	25	6	1000	0,018
06930-03204	32	M4	8	12,5	33	8	1000	0,028
06930-05504	55	M4	8	12,5	33	8	1000	0,038
06930-06404	64	M4	8	12,5	33	8	1000	0,041
06930-08804	88	M4	8	12,5	33	8	1000	0,050
06930-09604	96	M4	8	12,5	33	8	1000	0,056
06930-09804	98	M4	8	12,5	33	8	1000	0,057
06930-10204	102	M4	8	12,5	33	8	1000	0,058
06930-12004	120	M4	8	12,5	33	8	1000	0,065
06930-12804	128	M4	8	12,5	33	8	1000	0,068
06930-13604	136	M4	8	12,5	33	8	1000	0,071
06930-05505	55	M5	10	15	41	10	1000	0,067
06930-08805	88	M5	10	15	41	10	1000	0,087
06930-10005	100	M5	10	15	41	10	1000	0,094
06930-10205	102	M5	10	15	41	10	1000	0,095
06930-11505	115	M5	10	15	41	10	1000	0,103
06930-12005	120	M5	10	15	41	10	1000	0,105
06930-13605	136	M5	10	15	41	10	1000	0,112
06930-18005	180	M5	10	15	41	10	1000	0,142
06930-20005	200	M5	10	15	41	10	1000	0,154
06930-23505	235	M5	10	15	41	10	1000	0,175
06930-25005	250	M5	10	15	41	10	1000	0,184

Stirrup-Shaped Handles

in stainless steel



Material:
Stirrup-shaped handle in stainless steel 1.4305;
fastening material 1.4301

Surface finish:
Ground and matt-polish brushed

Sample order:
nlm 06931-2001

Note:
Refined steel Stirrup-Shaped Handles are ideal for all technical applications where top load rating and high chemical or corrosive stress resistance are required.

Form A
screwed on from front side

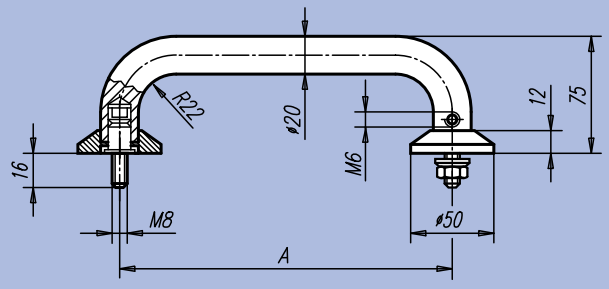

Form B
screwed on from rear side

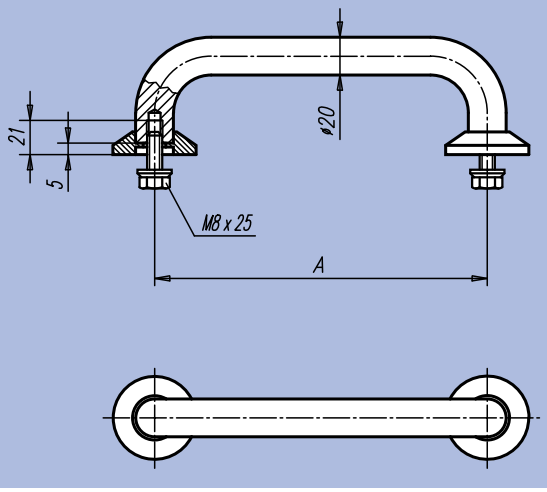

Order No.	Form	A	Load bearing capacity N	kg
06931-2001	A	200	1000	1,035
06931-2501	A	250	1000	1,157
06931-2002	B	200	1000	1,035
06931-2502	B	250	1000	1,157

All-Purpose Apparatus Handles



Material:
Aluminium Connecting Bridge;
grip legs in glass-ball reinforced polyamide

Surface finish:
Grip legs, half-matt with fine structure, black;
connecting bridge matt-finished and natural colour or black anodized

Sample order:
nlm 06932-10001

Suitable for 19" technology

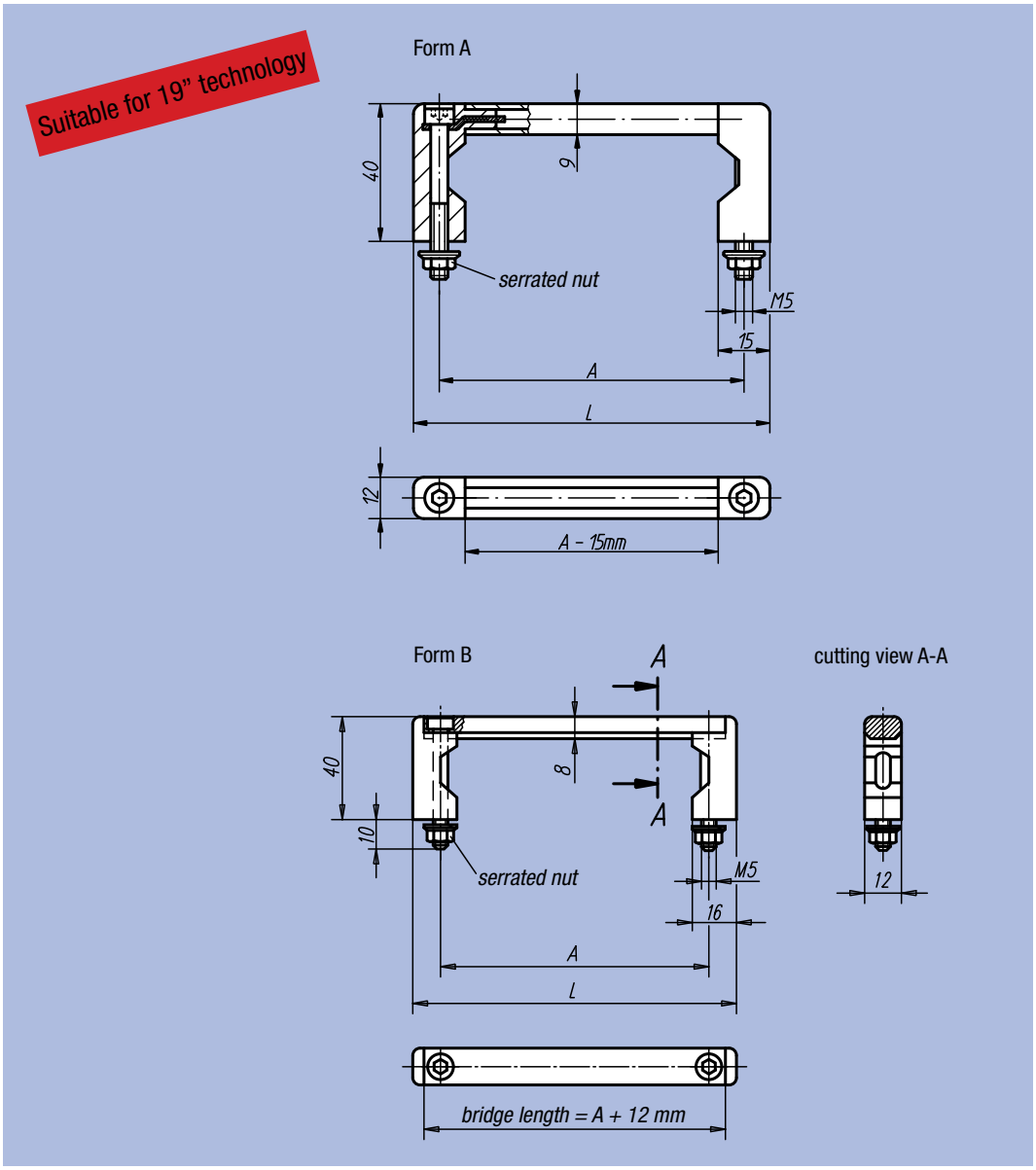

Order No. Surface finish black anodized	Order No. Surface finish natural colour anodized	Form	A	L	Load bearing capacity N
06932-05501	06932-05503	A	55	70	1000
06932-08801	06932-08803	A	88	103	1000
06932-10001	06932-10003	A	100	115	1000
06932-12001	06932-12003	A	120	135	1000
06932-18001	06932-18003	A	180	195	1000
06932-23501	06932-23503	A	235	250	1000
06932-055101	06932-055103	B	55	75	1000
06932-088101	06932-088103	B	88	108	1000
06932-100101	06932-100103	B	100	120	1000
06932-120101	06932-120103	B	120	140	1000
06932-180101	06932-180103	B	180	200	1000
06932-235101	06932-235103	B	235	255	1000

All-Purpose Apparatus Handles



Material:
Connecting bridge in aluminium;
grip leg in high-strength plastic

Sample order:
nlm 06933-05501

Note:
The centre distance can be adjusted by shortening the connecting bridge.

Suitable for 19" technology

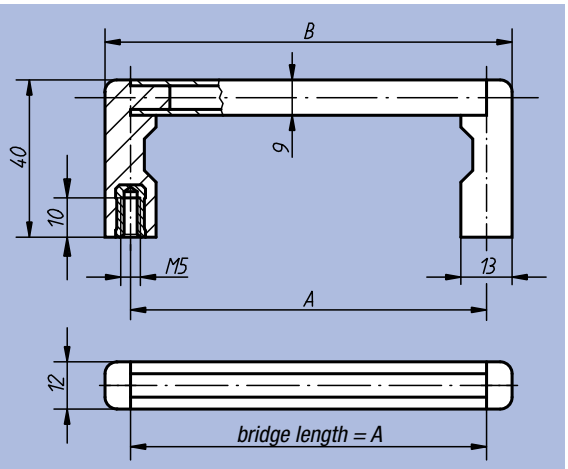

Order No. Surface finish connecting bridge black anodized	Order No. Surface finish connecting bridge natural colour anodized	A	B	Load bearing capacity N	□ kg
06933-05501	06933-05503	55	69	1000	0,026
06933-08801	06933-08803	88	102	1000	0,030
06933-10001	06933-10003	100	114	1000	0,032
06933-12001	06933-12003	120	134	1000	0,035
06933-18001	06933-18003	180	194	1000	0,044
06933-23501	06933-23503	235	249	1000	0,053

Measurement Device Handles



Material:
Steel or stainless steel 1.4305

Surface finish:
Surface very finely ground and high-polish chromium-plated; form B Connecting Bridge with additional smooth plastic coating; form C semi-matt finish, no score marks, vibration ground

Sample order:
nlm 06934-1201

Note:
Galvanized flat washers and nuts are supplied. Form C fastening material in stainless steel. Spring lock in both end positions.

Form A
surface very finely ground and high-polish chromium-plated

Form B
like form A, connecting bridge with additional smooth plastic coating

Form C
stainless steel, surface vibration ground

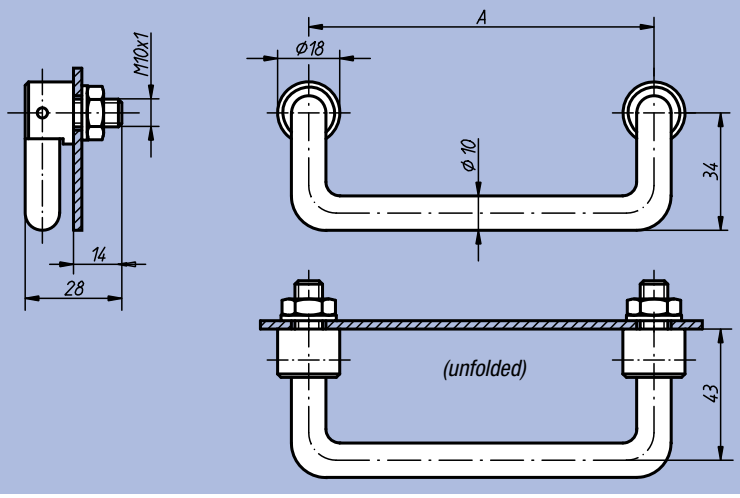

Order No. Form A	Order No. Form B	Order No. Form C	A	Load bearing capacity N	□ kg
06934-1001	06934-1002	06934-1003	100	500	0,135
06934-1201	06934-1202	06934-1203	120	500	0,160
06934-1801	06934-1802	06934-1803	180	500	0,215

Angled Draw-Pull Handles



Material:
Aluminium

Surface finish:
Matt-finished, black anodized
or natural colour anodized

Sample order:
nlm 06935-12001

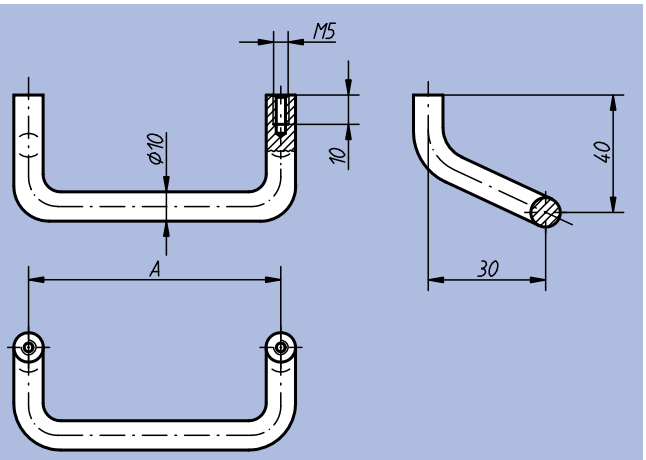

Order No. Surface finish black anodized	Order No. Surface finish natural colour anodized	A	Load bearing capacity N	kg
06935-08601	06935-08603	86	500	0,037
06935-12001	06935-12003	120	500	0,045
06935-18001	06935-18003	180	500	0,058

Bowed Tube Handles



Material:
Grip legs in black glass-ball reinforced thermoplastic;
connecting tube aluminium, anodized0

Sample order:
nlm 06936-3002

Note:
The grip legs are pinned to the aluminium connecting tube. Black galvanized cylindrical screws with hexagon socket, nuts and washers are supplied.

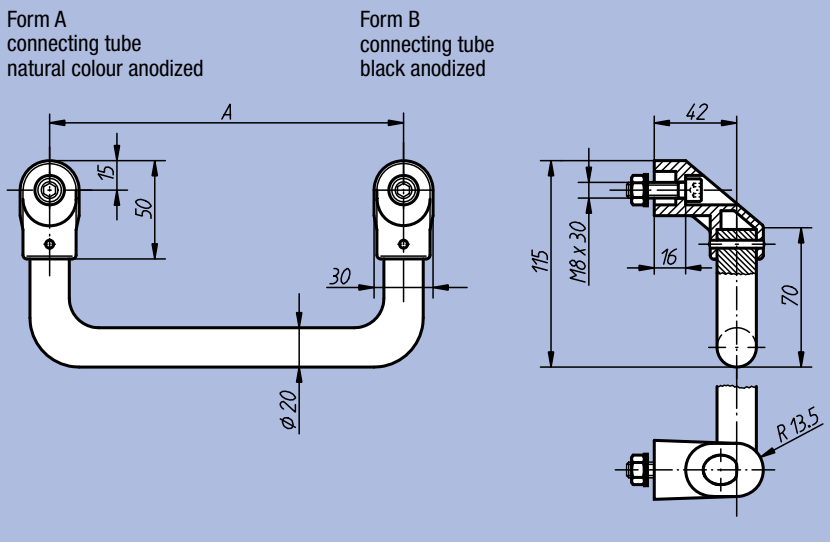

Order No. Form A	Order No. Form B	A	Load bearing capacity N	kg
06936-2001	06936-2002	200	800	0,361
06936-2501	06936-2502	250	800	0,410
06936-3001	06936-3002	300	800	0,451
06936-3501	06936-3502	350	800	0,493
06936-4001	06936-4002	400	800	0,525

Tube Handles



Material:
Grip legs in black glass-ball reinforced thermoplastic;
connecting tube aluminium
EN AW-6060

Sample order:
nlm 06937-3001

Note:
The grip legs have four clamping webs close to the tube accommodation. These clamping webs are shaved away when the connecting tube is inserted (push-fit). In this way an exact fit is generated.
Black galvanized fastening screws as well as suitable washers and nuts are supplied.

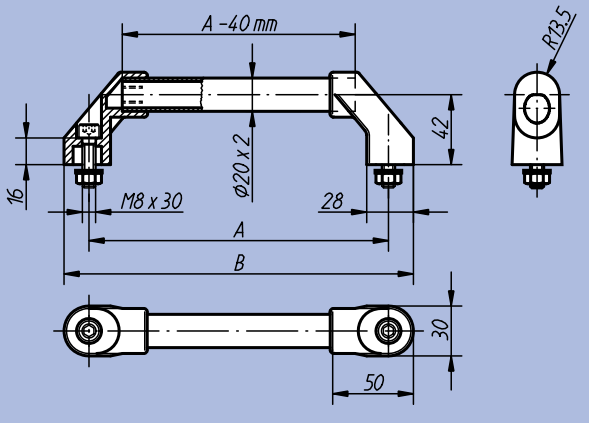

Form A
connecting tube ground and natural colour anodized

Form B
connecting tube with serrated plastic cover

Order No. Form A	Order No. Form B	A	B	Load bearing capacity N	kg
06937-1801	06937-1802	180	210	1000	0,170
06937-2001	06937-2002	200	230	1000	0,175
06937-2501	06937-2502	250	280	1000	0,190
06937-3001	06937-3002	300	330	1000	0,205
06937-3501	06937-3502	350	380	1000	0,220
06937-4001	06937-4002	400	430	1000	0,235
06937-5001	06937-5002	500	530	1000	0,270
06937-6001	06937-6002	600	630	1000	0,300

Tube Handles



Material:
Grip legs in black glass-ball reinforced thermoplastic;
connecting tube aluminium
EN AW-6060 or stainless steel 1.4301

Sample order:
nlm 06938-3501

Note:
The grip legs have four clamping webs close to the tube accommodation. These clamping webs are shaved away when the connecting tube is inserted (push-fit). In this way an exact fit is generated.
Black galvanized fastening screws as well as suitable washers and nuts are supplied.

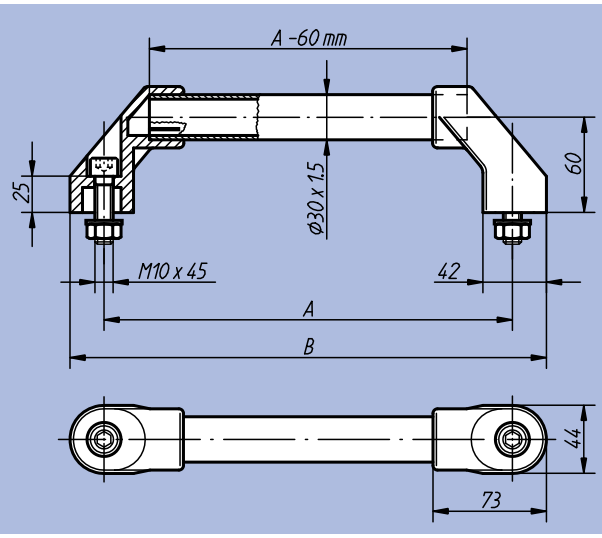

Form A
connecting tube ground and natural colour anodized

Form B
connecting tube with serrated plastic cover

Form C
connecting tube in stainless steel, finely ground

Order No. Form A	Order No. Form B	Order No. Form C	A	B	Load bearing capacity N	kg
06938-2501	06938-2502	06938-2503	250	294	1000	0,390
06938-3001	06938-3002	06938-3003	300	344	1000	0,405
06938-3501	06938-3502	06938-3503	350	394	1000	0,425
06938-4001	06938-4002	06938-4003	400	444	1000	0,445
06938-5001	06938-5002	06938-5003	500	544	1000	0,480
06938-6001	06938-6002	06938-6003	600	644	1000	0,520

Tube Handles



Material:
Connecting tube, aluminium EN AW-6060;
grip legs in glass-ball reinforced polyamide

Surface finish:
Connecting tube natural colour anodized or with serrated plastic cover

Sample order:
nlm 06939-150203

Note:
The grip legs have two/ four three-square PVC profiles close to the tube accommodation. These three-square PVC profiles are shaved away when the connecting tube is inserted (push fit). In this way an exact fit is generated.
Black galvanized fastening screws as well as suitable washers and nuts are supplied.

Form A

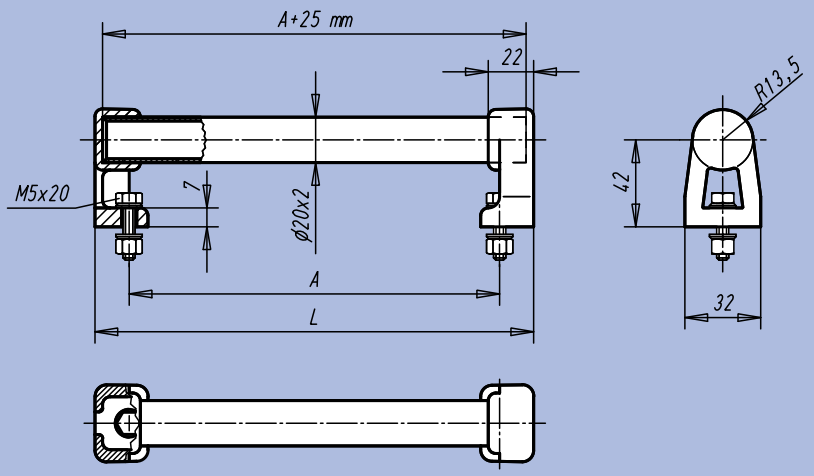

Form B

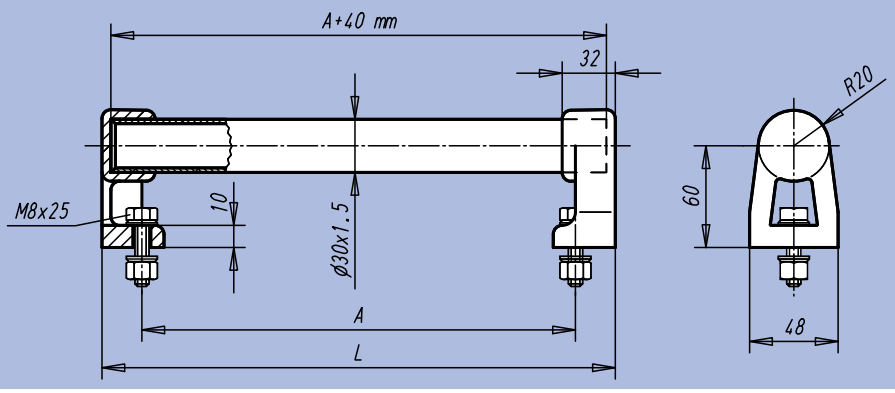

Order No. Surface finish natural colour anodized	Order No. Surface finish serrated plastic cover.	Form	A	L	Load bearing capacity N	kg
06939-150203	06939-150202	A	150	184	1000	0,118
06939-200203	06939-200202	A	200	234	1000	0,135
06939-300203	06939-300202	A	300	334	1000	0,167
06939-400203	06939-400202	A	400	434	1000	0,200
06939-500203	06939-500202	A	500	534	1000	0,232
06939-150303	06939-150302	B	150	200	1000	0,118
06939-200303	06939-200302	B	200	250	1000	0,135
06939-300303	06939-300302	B	300	350	1000	0,167
06939-400303	06939-400302	B	400	450	1000	0,200
06939-500303	06939-500302	B	500	550	1000	0,232

Tube Handles



Material:
Tube holder and tube cap in glass-ball-reinforced polyamide; connecting tube aluminium EN AW-6060

Surface finish:
Connecting tube finely ground and black anodized or natural colour anodized; tube holder and tube cap semi-matt with fine texture, black

Sample order:
nlm 06940-200061

Note:
Tear-out-resistant screw connection between handle holder and tube by non-releasing blind rivet nut.

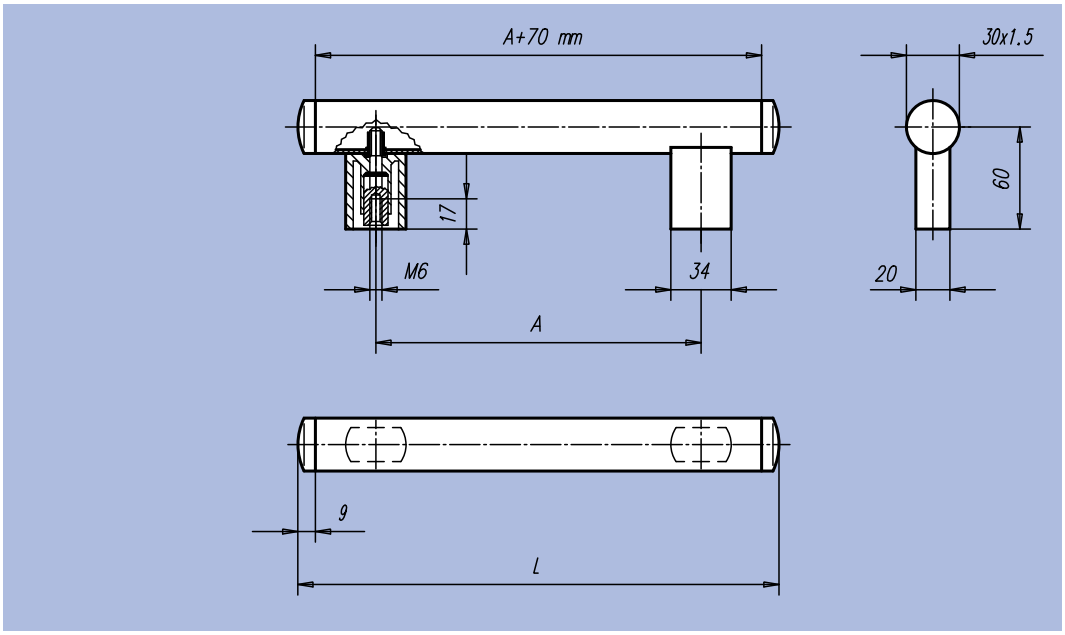

Order No.	Surface finish	A	L	Load bearing capacity N	kg
06940-200061	black anodized	200	288	800	0,211
06940-250061	black anodized	250	338	800	0,228
06940-300061	black anodized	300	388	800	0,245
06940-400061	black anodized	400	488	800	0,280
06940-500061	black anodized	500	588	800	0,315
06940-200063	natural colour anodized	200	288	800	0,211
06940-250063	natural colour anodized	250	338	800	0,228
06940-300063	natural colour anodized	300	388	800	0,245
06940-400063	natural colour anodized	400	488	800	0,280
06940-500063	natural colour anodized	500	588	800	0,315

Tube Handles



Material:
Connecting tube stainless steel 1.4301;
fastener die-cast aluminium;
glass-ball reinforced end cap;
screws and steel clamping device

Surface finish:
Connecting tube finely ground;
fastener black powder-coated;
end cap, black.
screws and clamping device galvanized and chromated

Sample order:
nlm 06941-0600101

Note:
High load rating Tube Handles for mechanical and process equipment engineering. Easy mounting of components from front side. Any screw distance possible for same handle length.

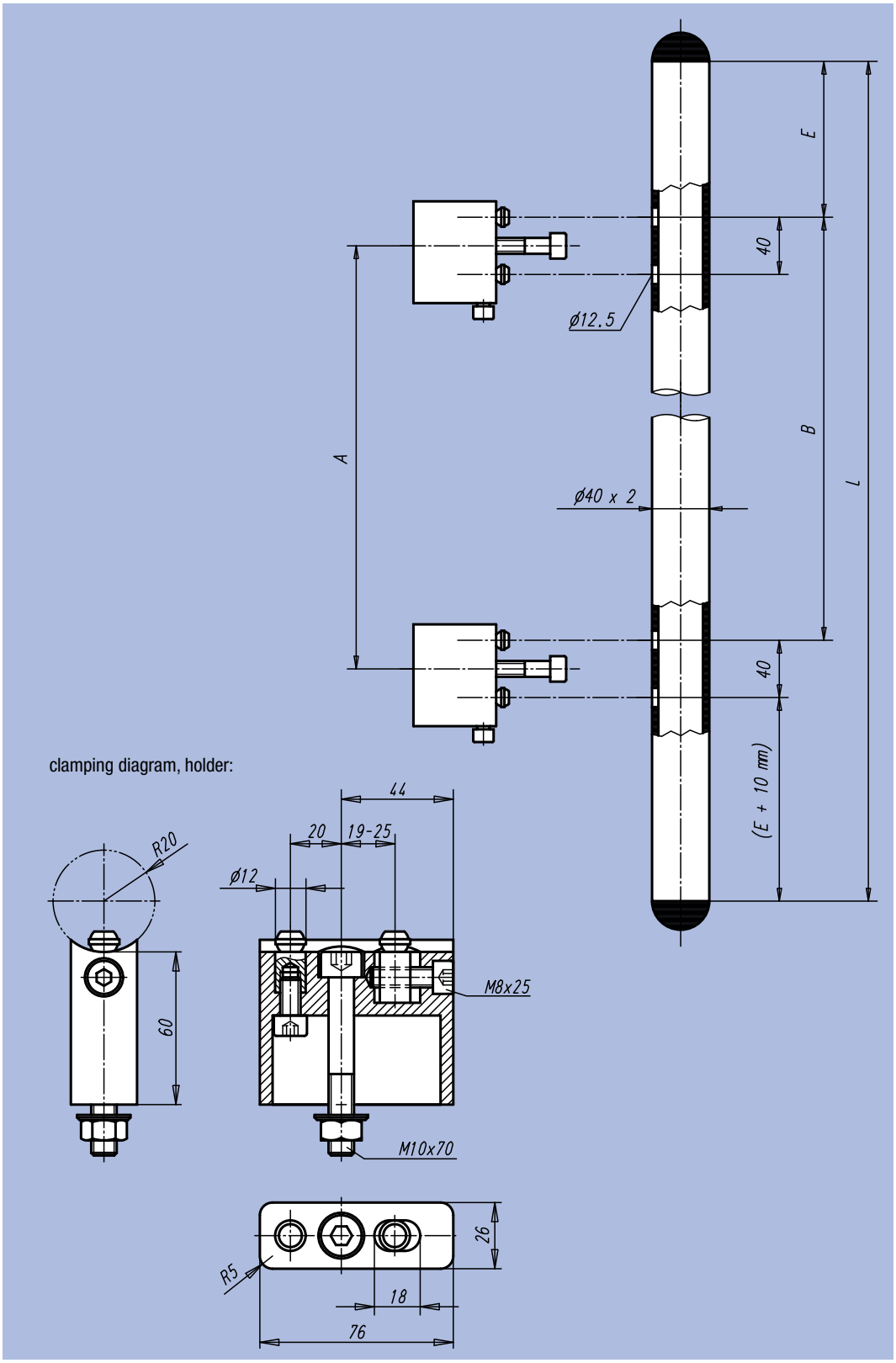

Order No.	A	B	E	L	Load bearing capacity N	kg
06941-0600101	380	380	85	600	1000	1,847
06941-0700101	480	480	85	700	1000	2,029
06941-0800101	500	500	125	800	1000	2,212
06941-0900101	600	600	125	900	1000	2,395
06941-1000101	700	700	125	1000	1000	2,577

Tube Handles



Material:
Grip legs in glass-ball reinforced thermoplastic;
connecting tube stainless steel 1.4301;
inserts stainless steel 1.4305

Surface finish:
Grip legs with fine structure, black;
connecting tubes, finely ground;
inserts, finely lathed

Sample order:
nlm 06942-300101

Note:
Precision fit of tube on plastic tenon due to clamping webs. Splash-proof by o-rings.
Different fastening inserts allow screwing on from the front, from the rear or one with the other (as a double handle).
Handles with screw head insert are supplied with fastening material in refined steel.
Handles with threaded insert are supplied without screws.

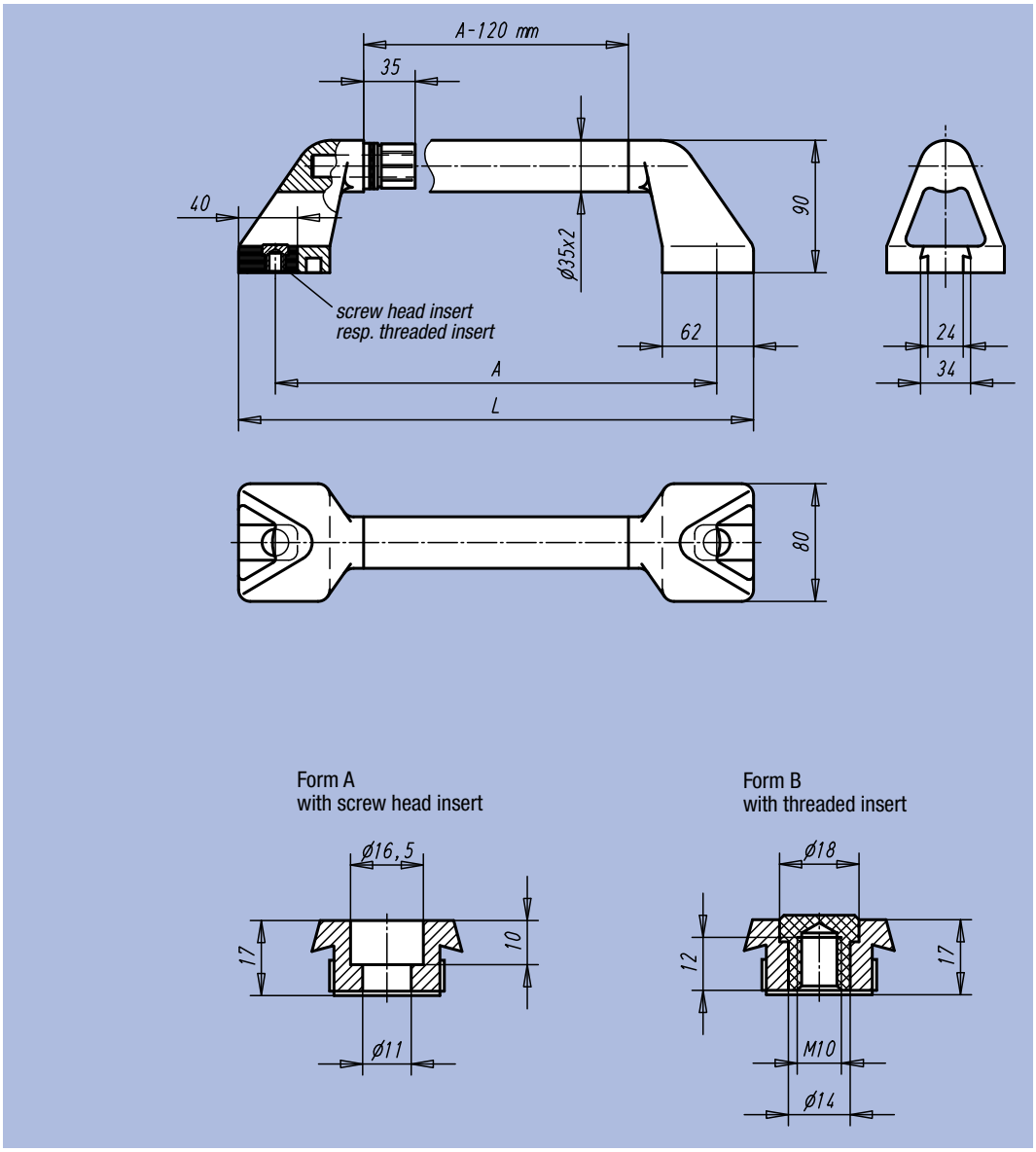

Order No.	Form	A	L	Load bearing capacity N	kg
06942-300101	A	300	350	1000	0,853
06942-350101	A	350	400	1000	0,934
06942-400101	A	400	450	1000	1,016
06942-500101	A	500	550	1000	1,179
06942-600101	A	600	650	1000	1,341
06942-300102	B	300	350	1000	0,813
06942-350102	B	350	400	1000	0,894
06942-400102	B	400	450	1000	0,976
06942-500102	B	500	550	1000	1,139
06942-600102	B	600	650	1000	1,301

Tube Handles



Material:
Connecting tube and fastening material in stainless steel 1.4301; grip leg in precision cast 1.4581

Surface finish:
Connecting tube, finely ground or with serrated plastic cover, black; grip legs blasted and electro-polished with matt-gloss finish

Sample order:
nlm 06943-200081

Note:
Cylindrical screws with hexagon socket, nuts and suit-able washers are supplied for Tube Handles form A. Hexagon head screws and suitable washers are supplied for Tube Handles form B.

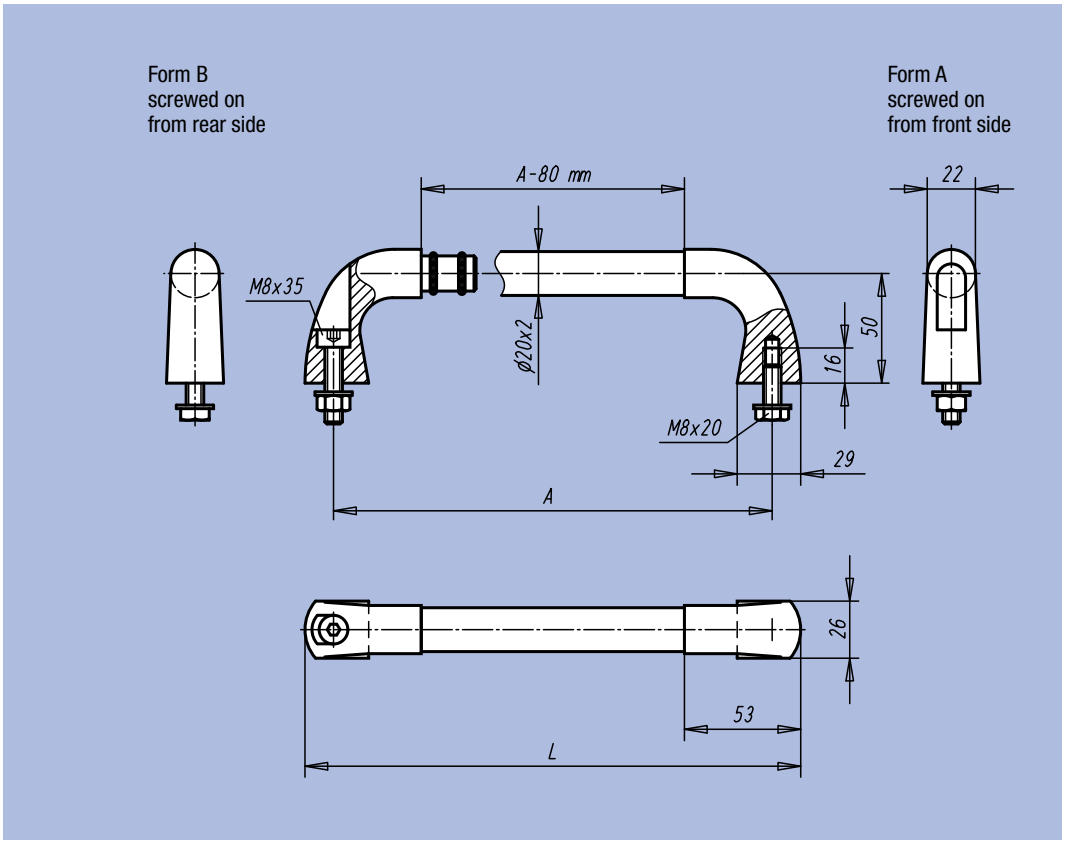

Order No.	Form	Surface finish	A	L	Load bearing capacity N	kg
06943-200081	A	tube ground	200	226	1000	0,680
06943-300081	A	tube ground	300	326	1000	0,775
06943-400081	A	tube ground	400	426	1000	0,865
06943-200082	A	tube with plastic cover	200	226	1000	0,680
06943-300082	A	tube with plastic cover	300	326	1000	0,775
06943-400082	A	tube with plastic cover	400	426	1000	0,865
06943-200083	B	tube ground	200	226	1000	0,710
06943-300083	B	tube ground	300	326	1000	0,800
06943-400083	B	tube ground	400	426	1000	0,900
06943-200084	B	tube with plastic cover	200	226	1000	0,710
06943-300084	B	tube with plastic cover	300	326	1000	0,800
06943-400084	B	tube with plastic cover	400	426	1000	0,900

Machine Handles



Material:
Grip leg and connecting bridge in aluminium EN AW-6060;
connecting pins in stainless steel

Surface finish:
Grip leg and connecting bridge finely ground, black anodized or natural colour anodized

Sample order:
nlm 06944-250081

Note:
The solid construction also permits this handle series to be used as edge protection.

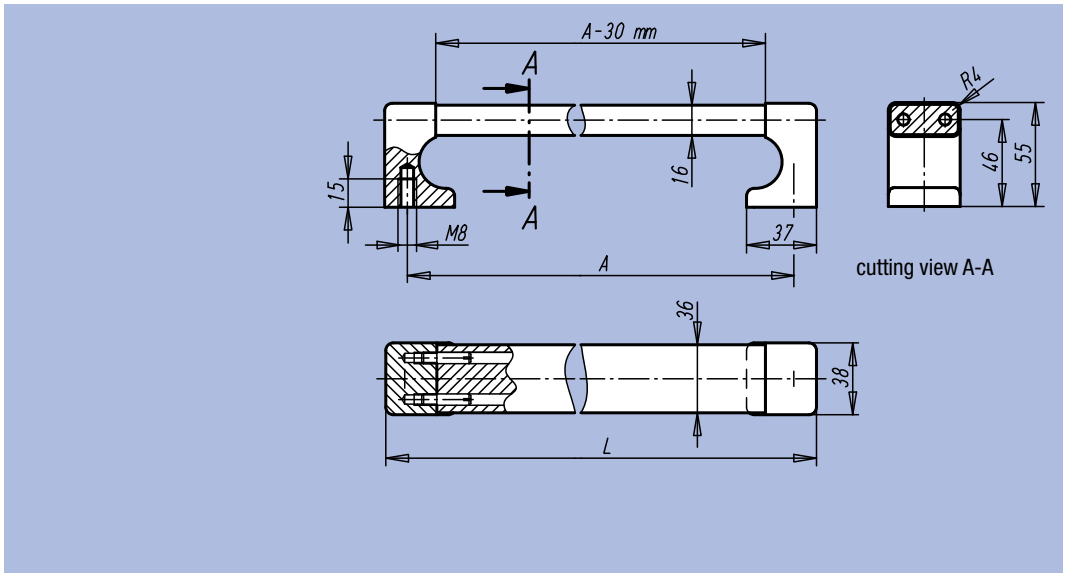

Order No. Surface finish black anodized	Order No. Surface finish natural colour anodized	A	L	Load bearing capacity N	□ kg
06944-250081	06944-250083	250	274	1000	0,555
06944-300081	06944-300083	300	324	1000	0,618
06944-400081	06944-400083	400	424	1000	0,742
06944-500081	06944-500083	500	524	1000	0,867
06944-600081	06944-600083	600	624	1000	0,992

Control Panel Handles



Material:
Round aluminium EN AW-6060

Surface finish:
Ground, glass-ball blasted and matt-polish black anodized

Sample order:
nlm 06945-20016

Note:
End washers not included.

On request:
Any handle length.

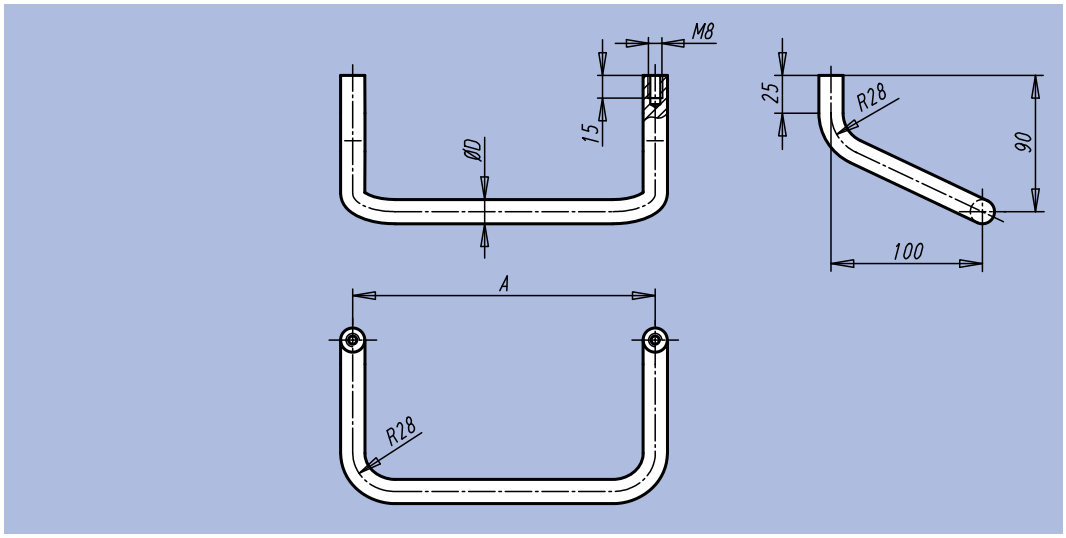

Order No.	A	D	Load bearing capacity N	□ kg	Order No. End washer
06945-20016	200	16	1000	0,240	06945-16
06945-25016	250	16	1000	0,270	06945-16
06945-30016	300	16	1000	0,300	06945-16
06945-40016	400	16	1000	0,350	06945-16
06945-50018	500	18	1000	0,520	06945-18

Machine Handles



Material:
Round steel

Surface finish:
Ground, brushed and matt-finish chromium-plated or black powder-coated with fine texture

Sample order:
nlm 06946-200081

Note:
Available as simple stirrup-shaped handle or angled.

Form A

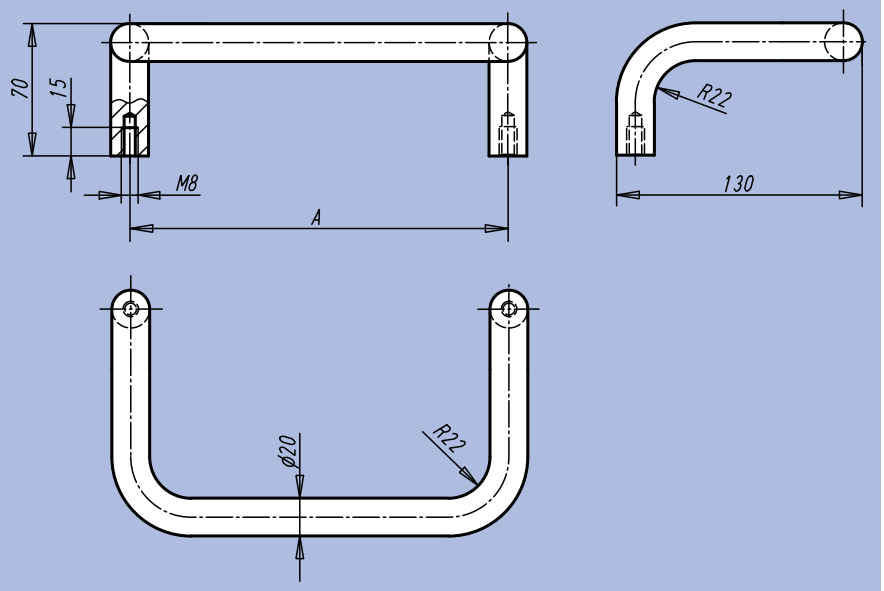

Form B

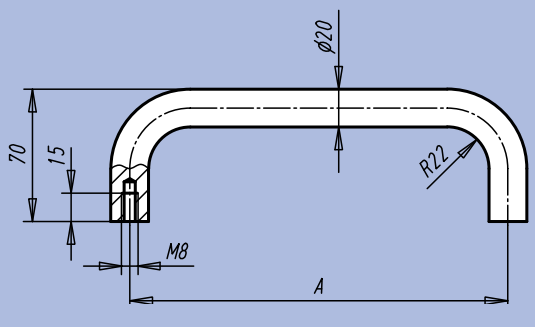

Order No.	Form	Surface finish	A	Load bearing capacity N	kg
06946-200081	A	matt-finish chromium-plated	200	1000	1,150
06946-350081	A	matt-finish chromium-plated	350	1000	1,525
06946-200082	A	black powder-coated	200	1000	1,150
06946-350082	A	black powder-coated	350	1000	1,525
06946-200083	B	matt-finish chromium-plated	200	1000	0,680
06946-250083	B	matt-finish chromium-plated	250	1000	0,810
06946-300083	B	matt-finish chromium-plated	300	1000	0,930
06946-350083	B	matt-finish chromium-plated	350	1000	1,060
06946-200084	B	black powder-coated	200	1000	0,680
06946-250084	B	black powder-coated	250	1000	0,810
06946-300084	B	black powder-coated	300	1000	0,930
06946-350084	B	black powder-coated	350	1000	1,060

Ledge Handles

in stainless steel

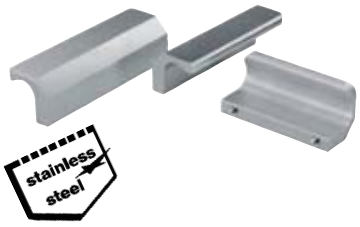

Material:
Profile in refined steel,
stainless steel 1.4404

Surface finish:
Blasted and electro-polished with matt-gloss finish

Sample order:
nlm 06951-06006

On request:
Any other lengths.

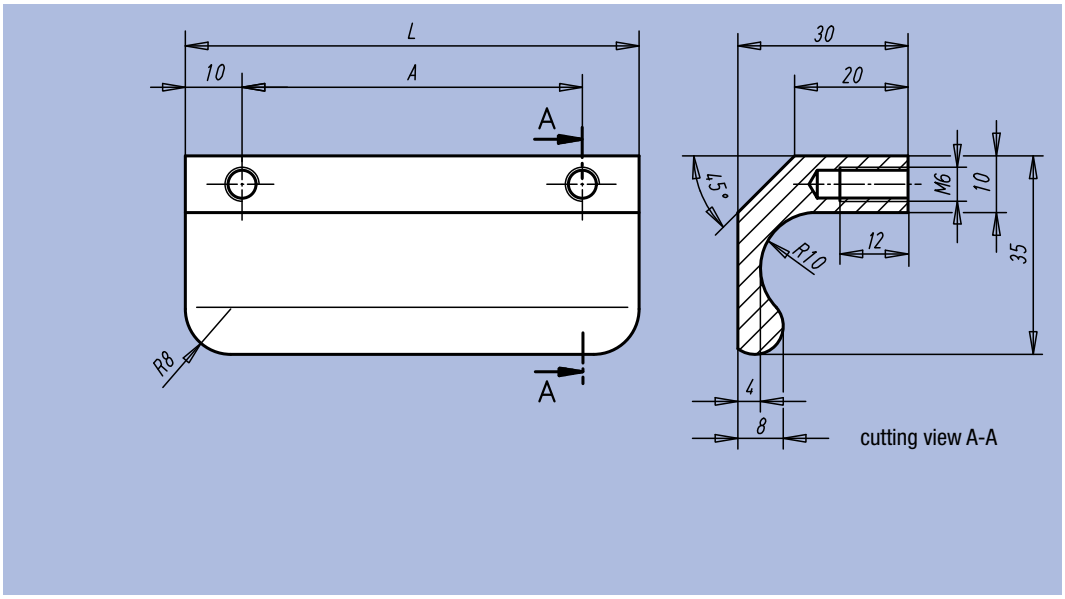

Order No.	A	L	Load bearing capacity N	kg
06951-06006	60	80	1000	0,248
06951-08006	80	100	1000	0,310
06951-10006	100	120	1000	0,373
06951-13006	130	150	1000	0,467

Notes:

Angled Profile Handles



Material:
Profile aluminium EN AW-6060

Surface finish:
Profile aluminium matt-polish anodized.

Sample order:
nlm 06952-086061

Note:
Angled Profile Handles are available with internal thread M6 or with through hole for M5 countersunk screws for side mounting.

Form A

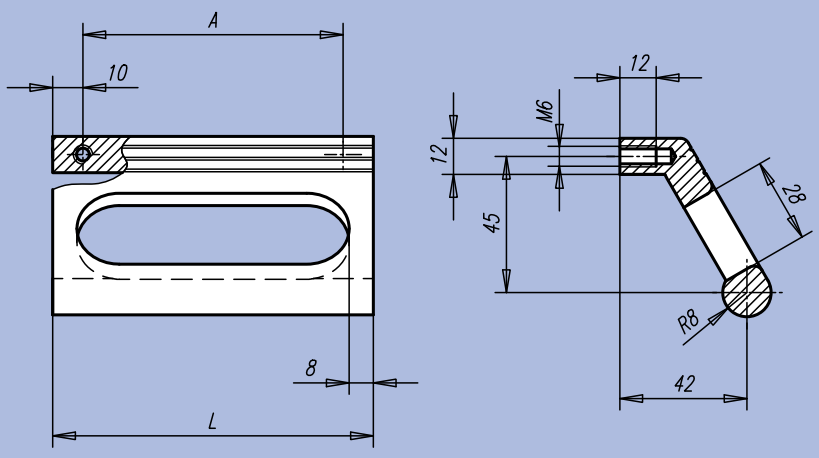

Form B

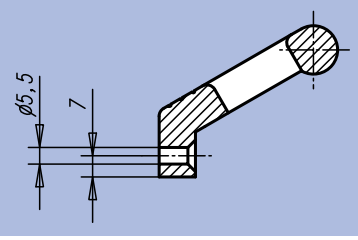

Order No.	Form	Surface finish	A	L	Load bearing capacity N	kg
06952-086061	A	black anodized	86	106	500	0,189
06952-100061	A	black anodized	100	120	500	0,203
06952-120061	A	black anodized	120	140	500	0,233
06952-086063	A	natural colour anodized	86	106	500	0,189
06952-100063	A	natural colour anodized	100	120	500	0,203
06952-120063	A	natural colour anodized	120	140	500	0,233
06952-086051	B	black anodized	86	106	500	0,189
06952-100051	B	black anodized	100	120	500	0,203
06952-120051	B	black anodized	120	140	500	0,233
06952-086053	B	natural colour anodized	86	106	500	0,189
06952-100053	B	natural colour anodized	100	120	500	0,203
06952-120053	B	natural colour anodized	120	140	500	0,233

Angled Leg Handles



Material:
Connecting tube in aluminium EN AW-6060 or stainless steel 1.4301; grip leg in polyamide, glass-ball reinforced;
threaded bush in brass

Surface finish:
Connecting tube natural colour or black anodized resp. stainless steel finely ground;
grip leg matt black

Sample order:
nlm 06956-088041

Note:
Precision fit of tube on plastic grip leg due to clamping webs.

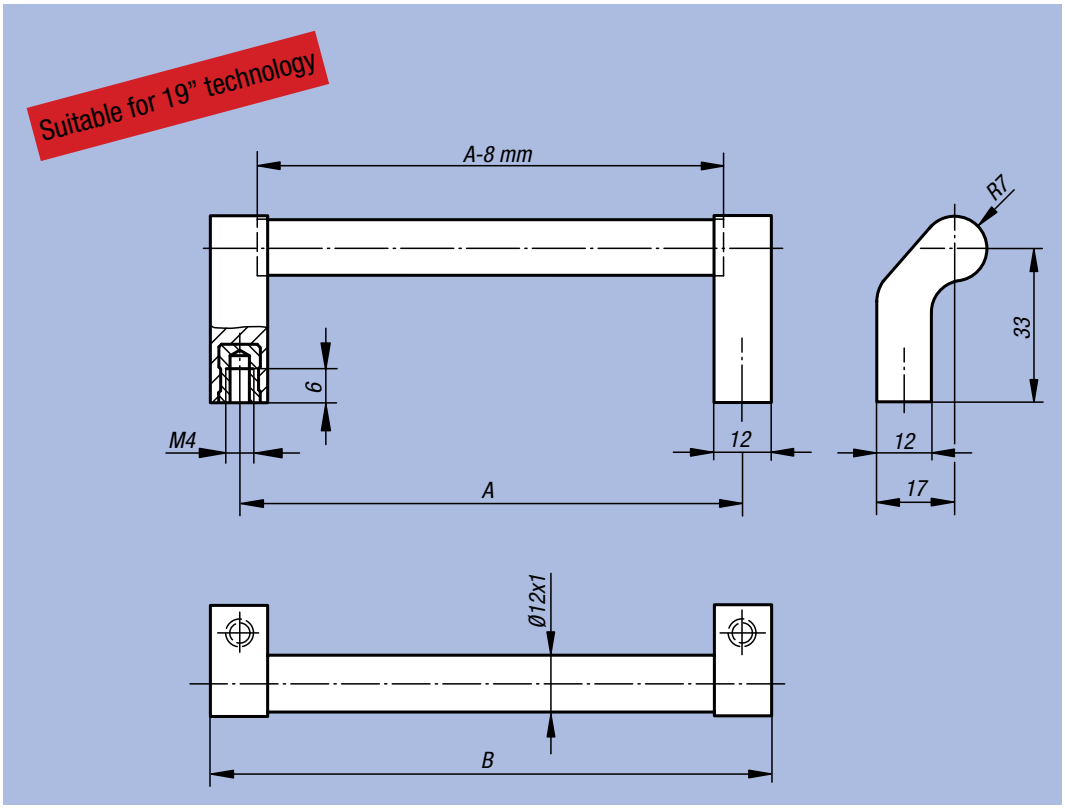

Order No.	Surface finish	A	B	Load bearing capacity N	kg
06956-088041	natural colour anodized	88	100	200	0,028
06956-096041	natural colour anodized	96	108	200	0,029
06956-120041	natural colour anodized	120	132	200	0,031
06956-128041	natural colour anodized	128	140	200	0,033
06956-160041	natural colour anodized	160	172	200	0,035
06956-180041	natural colour anodized	180	192	200	0,037
06956-088042	black anodized	88	100	200	0,028
06956-096042	black anodized	96	108	200	0,029
06956-120042	black anodized	120	132	200	0,031
06956-128042	black anodized	128	140	200	0,033
06956-160042	black anodized	160	172	200	0,035
06956-180042	black anodized	180	192	200	0,037
06956-088043	stainless steel	88	100	200	0,042
06956-096043	stainless steel	96	108	200	0,044
06956-120043	stainless steel	120	132	200	0,051
06956-128043	stainless steel	128	140	200	0,053
06956-160043	stainless steel	160	172	200	0,062
06956-180043	stainless steel	180	192	200	0,067

Apparatus Handles



Material:
Connecting bridge in aluminium EN AW-6060;
grip leg in polyamide glass-ball reinforced;
threaded bush in brass

Surface finish:
Connecting bridge finely ground and natural colour or black anodized;
grip leg aluminium colour or black

Sample order:
nlm 06958-1055041

Note:
Connecting bridge and grip leg are firmly screwed with each other.

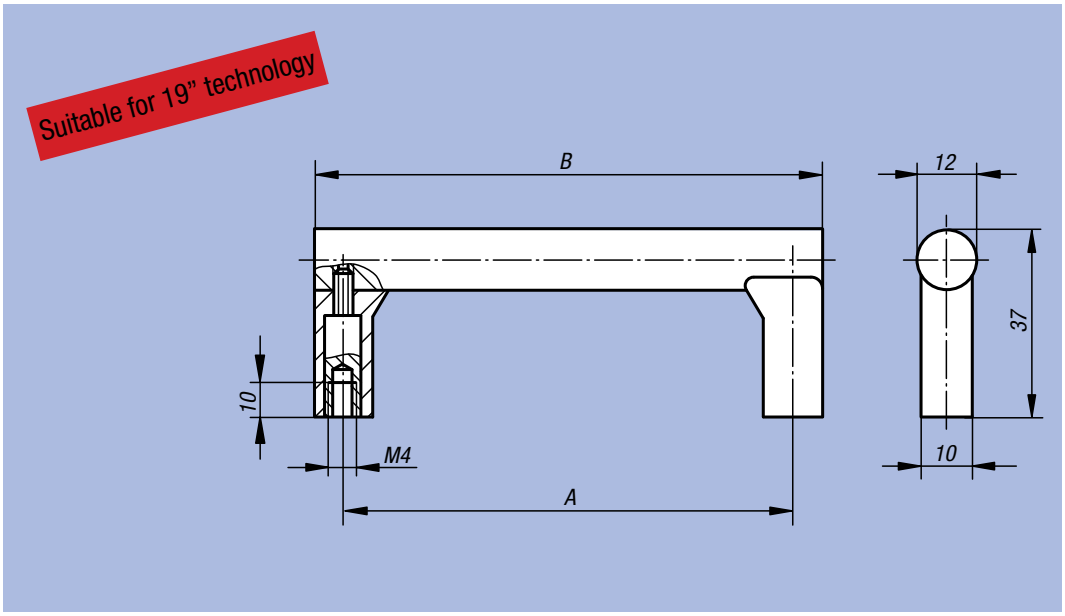

Order No. Surface finish connecting bridge natural colour anodized, grip leg aluminium colour	Order No. Surface finish connecting bridge natural colour anodized, grip leg black	Order No. Surface finish connecting bridge black anodized, grip leg aluminium colour	Order No. Surface finish connecting bridge black anodized, grip leg black	A	B	Load bearing capacity N	kg
06958-1055041	06958-1055042	06958-1055043	06958-1055044	55	67	300	0,035
06958-1088041	06958-1088042	06958-1088043	06958-1088044	88	100	300	0,044
06958-1100041	06958-1100042	06958-1100043	06958-1100044	100	112	300	0,048
06958-1120041	06958-1120042	06958-1120043	06958-1120044	120	132	300	0,054
06958-1180041	06958-1180042	06958-1180043	06958-1180044	180	192	300	0,072

Plastic Handles



Material:
Glass-ball reinforced thermoplastic; fastening material 1.4301

Surface finish:
Matt black with fine texture

Sample order:
nlm 06959-12805

Note:
The Plastic Handles can be used for one-sided mounting. They are also dimensionally stable and have a high load rating.
Fastening bolts, nuts and flat washers are supplied as well as a clamping plate for extra torsion protection.

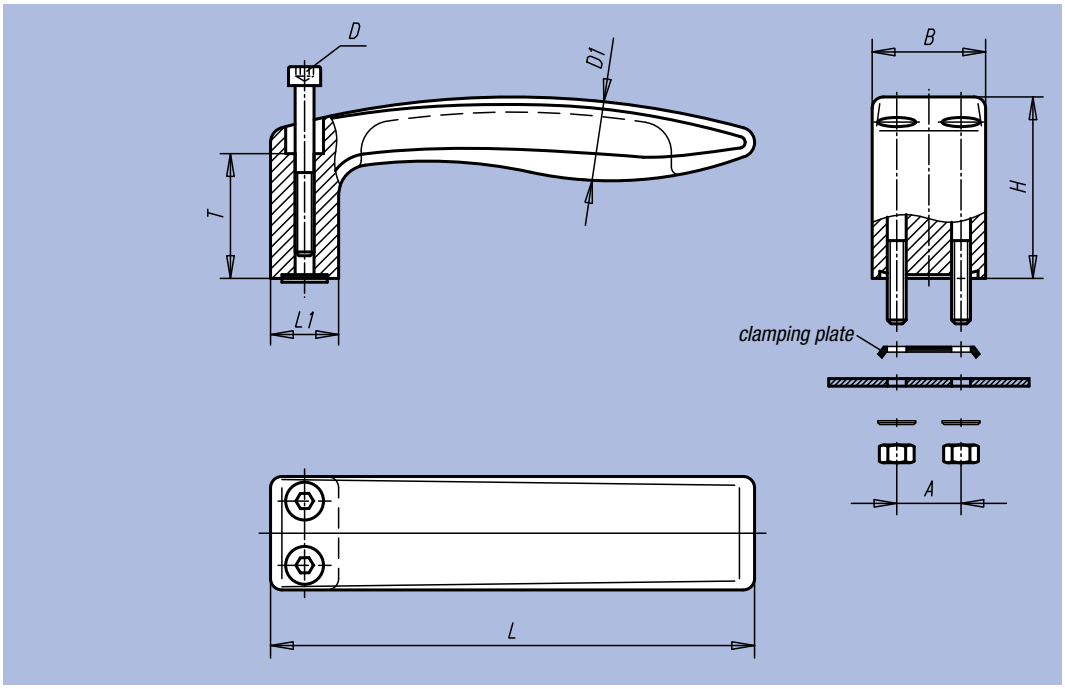

Order No.	A	B	D	D1	H	L	L1	T	Load bearing capacity N	kg
06959-12805	17	30	M5x45	20	48	128	18	33	800	0,106
06959-15606	20	36	M6x55	24	58	156	22	40	1000	0,186

Tray Handles

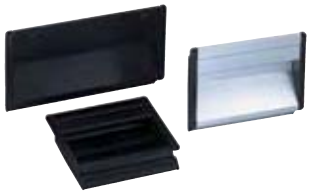

Material:
Tray handle in aluminium profile;
end caps polyamide;
form A: mounting by rubber insert
form B: mounting by 2 countersunk screws, steel

Surface finish:
Tray handle glass-ball blasted, satin finish and black anodized or natural colour anodized;
rubber insert black;
fastening screws galvanized

Sample order:
nlm 06960-10011

Note:
The Tray Handles form A can be used without screw mounting with sheet strengths of 1-2.5 mm. Two rubber inserts ensure absolutely firm mounting. The Tray Handles form B can be mounted from outside with 2 countersunk screws.

Two cross-slots offset by 90° for M4 screws allow earth/ground connection and can serve as a mounting aid for additional add-on parts.

Installation:
After fitting the lower rubber insert, press the two side caps onto the tray handle. Next press the handle over the lower edge of the mounting cutout at a 45° angle and then hold it against the housing panel.
Now push the 2nd rubber insert into the upper groove or mount it with 2 countersunk screws.

Suitable for 19" technology

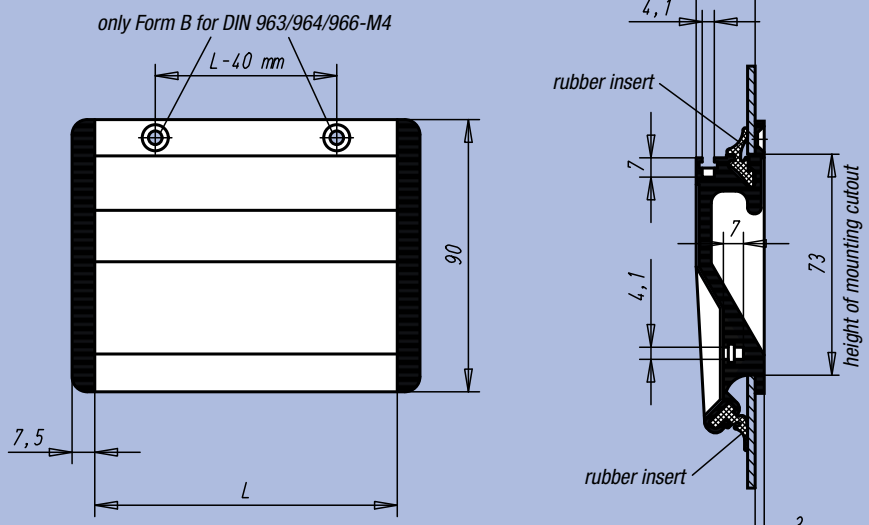

installation

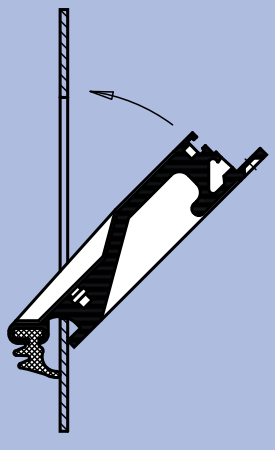

mounting cutout

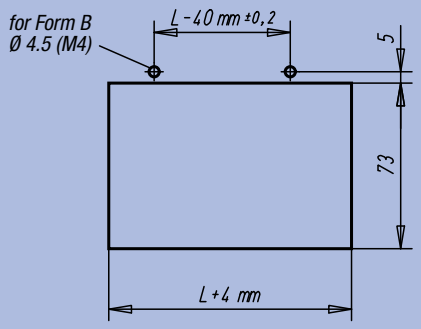

Order No. Surface finish tray handle black anodized	Order No. Surface finish tray handle natural colour anodized	Form	L	Mounting cutout	Load bearing capacity N	kg
06960-10011	06960-10013	A	100	104 x 73	500	0,107
06960-11811	06960-11813	A	118	122 x 73	500	0,126
06960-16711	06960-16713	A	167	171 x 73	500	0,178
06960-10021	06960-10023	B	100	104 x 73	500	0,107
06960-11821	06960-11823	B	118	122 x 73	500	0,126
06960-16721	06960-16723	B	167	171 x 73	500	0,178

Profile Folding Handles



Material:
Tray and folding handle in aluminium profile; end caps polyamide;
form A: mounting by rubber insert
form B: mounting by 2 countersunk screws, steel

Surface finish:
Tray and folding handle glass-ball blasted, satin finish and black anodized or natural colour anodized; rubber insert black, fastening screws galvanized

Sample order:
nlm 06961-10011

Note:
Profile Folding Handles form A can be fitted without screw mounting with 2 soft plastic profiles with sheet strengths of 1-2.5 mm.
Profile Folding Handles form B can be mounted from outside with 2 countersunk screws.

Two cross-slots for M4 screws allow earth/ground connection and can serve as a mounting aid for additional add-on parts.

Installation:
After fitting the lower rubber insert, press the two side caps onto the tray handle. Next press the handle over the lower edge of the mounting cutout at a 45° angle and then hold it against the housing panel.
Now push the 2nd rubber insert into the upper groove or mount it with 2 countersunk screws.

Suitable for 19" technology

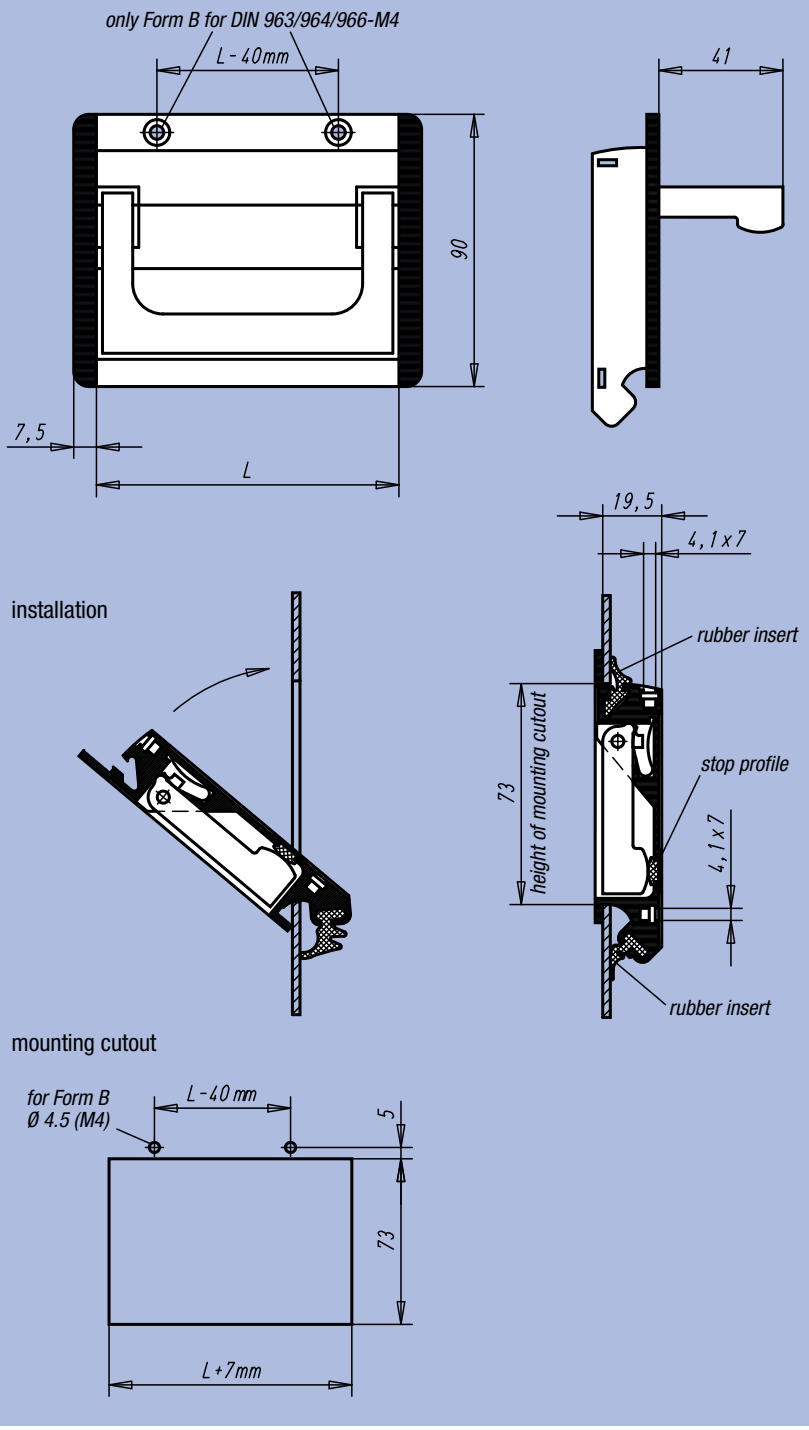

Order No. Surface finish tray and folding handle black anodized	Order No. Surface finish tray and folding handle natural colour anodized	Form	L	Mounting cutout	Load bearing capacity N	kg
06961-10011	06961-10013	A	100	107 x 73	500	0,273
06961-11811	06961-11813	A	118	125 x 73	500	0,320
06961-16711	06961-16713	A	167	174 x 73	500	0,433
06961-10021	06961-10023	B	100	107 x 73	500	0,273
06961-11821	06961-11823	B	118	125 x 73	500	0,320
06961-16721	06961-16723	B	167	174 x 73	500	0,433

Folding Tray Handles



Material:
Die cast aluminium

Surface finish:
Tray and handle black or light grey powder-coated, semi-matt

Sample order:
nlm 06962-05018411

Note:
With their modern design, Folding Tray Handles can be used wherever solid and attractive handles are needed.
Folding Tray Handles form A snap into both resting and working positions.
Folding Tray Handles form B swivels back into its resting position automatically after use.

Installation:
The Folding Tray Handle can be installed behind or in front of the housing panel with the same housing cutout.

Suitable for 19" technology

Form A
handle snaps both into working and resting positions

Form B
handle swivels back automatically into resting position

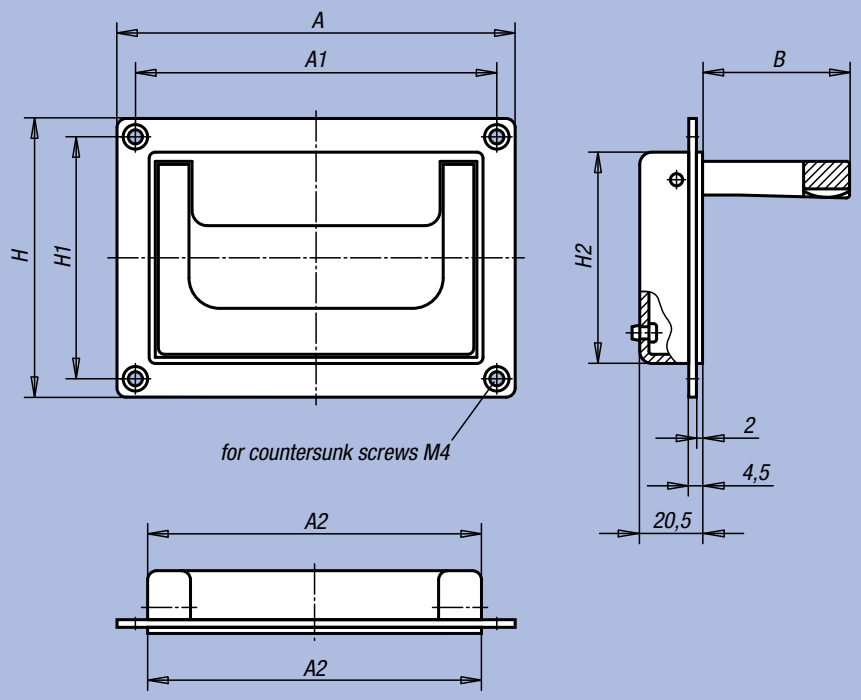

mounting cutout

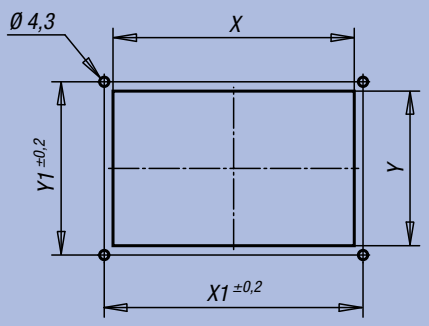

Order No.	Form	Surface finish	A	A1	A2	B	H	H1	H2	X	X1	Y	Y1	Load bearing capacity N	kg
06962-07911811	A	black powder-coated	130	118	109	48	91	79	69	110	118	70,5	79	500	0,197
06962-05018411	A	black powder-coated	200	184	170	51	80	50	72	171	184	73	50	500	0,286
06962-07911812	A	black powder-coated	130	118	109	48	91	79	69	110	118	70,5	79	500	0,197
06962-05018412	A	black powder-coated	200	184	170	51	80	50	72	171	184	73	50	500	0,286
06962-07911821	B	black powder-coated	130	118	109	48	91	79	69	110	118	70,5	79	500	0,197
06962-05018421	B	black powder-coated	200	184	170	51	80	50	72	171	184	73	50	500	0,286
06962-07911822	B	light grey powder-coated	130	118	109	48	91	79	69	110	118	70,5	79	500	0,197
06962-05018422	B	light grey powder-coated	200	184	170	51	80	50	72	171	184	73	50	500	0,286

Trough Grips



Material:
Glass-ball reinforced thermoplastic

Surface finish:
Semi-matt, black or light grey

Sample order:
nlm 06965-1082041

Note:
These ergonomically shaped trough grips are ideally suited for wall thickness of 1-5 mm.

Installation:
The Handle has to be inserted in the cutout of the housing panel and then mounted from front side with
2 countersunk screws (not included).

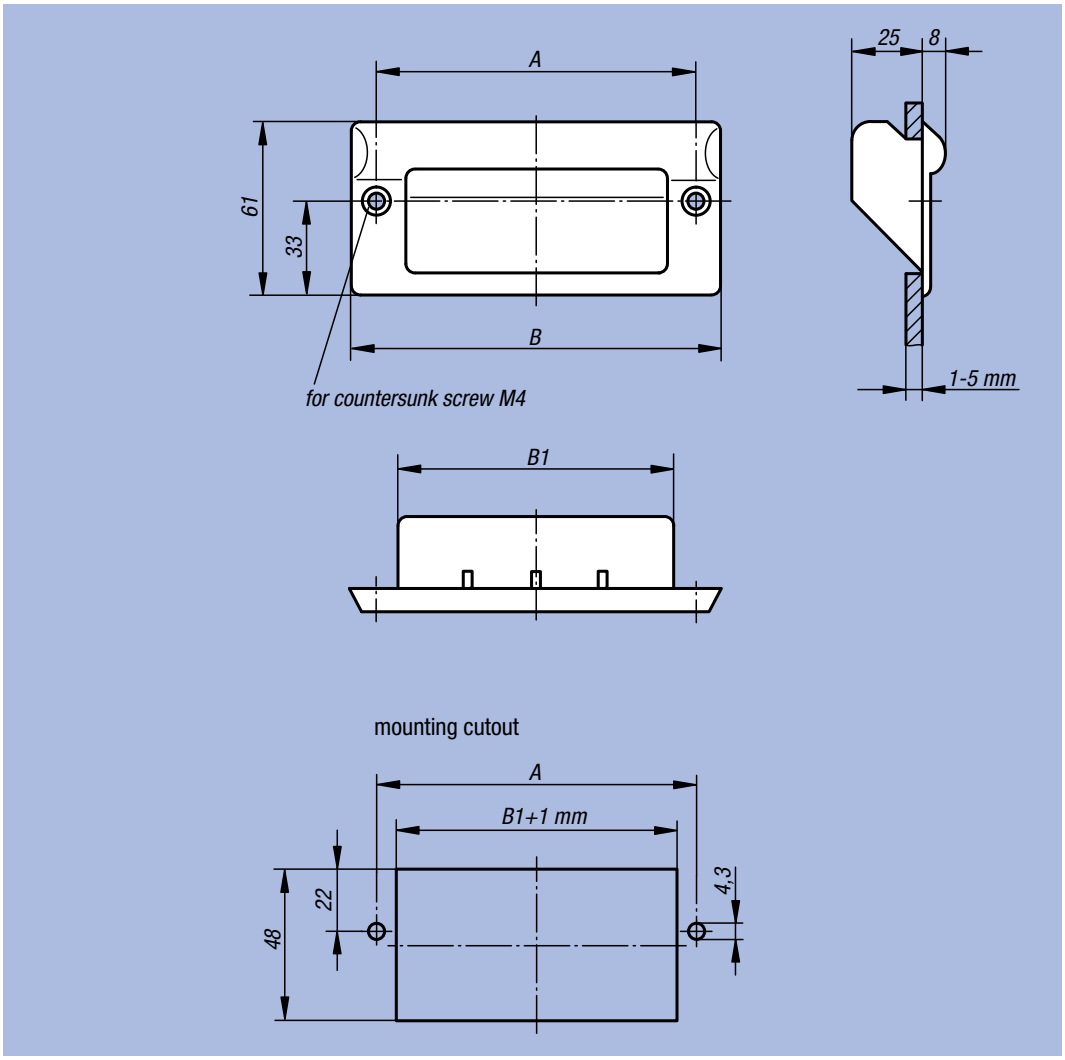

Order No.	Colour	A	B	B1	Load bearing capacity N	kg
06965-1082041	black	82	100	67	1000	0,044
06965-1112041	black	112	130	97	1000	0,056
06965-1082042	light grey	82	100	67	1000	0,044
06965-1112042	light grey	112	130	97	1000	0,056

Fitting grip in stainless steel



Material:
Stainless steel 1.4301

Surface finish:
High-electro-polished finish

Sample order:
nlm 06970-1120000

Note:
Stainless steel retractable grips with marginal installation depth. For base and mounting plates or drawers. With return spring. According to operation, the grip automatically swivels back into its resting position after use.

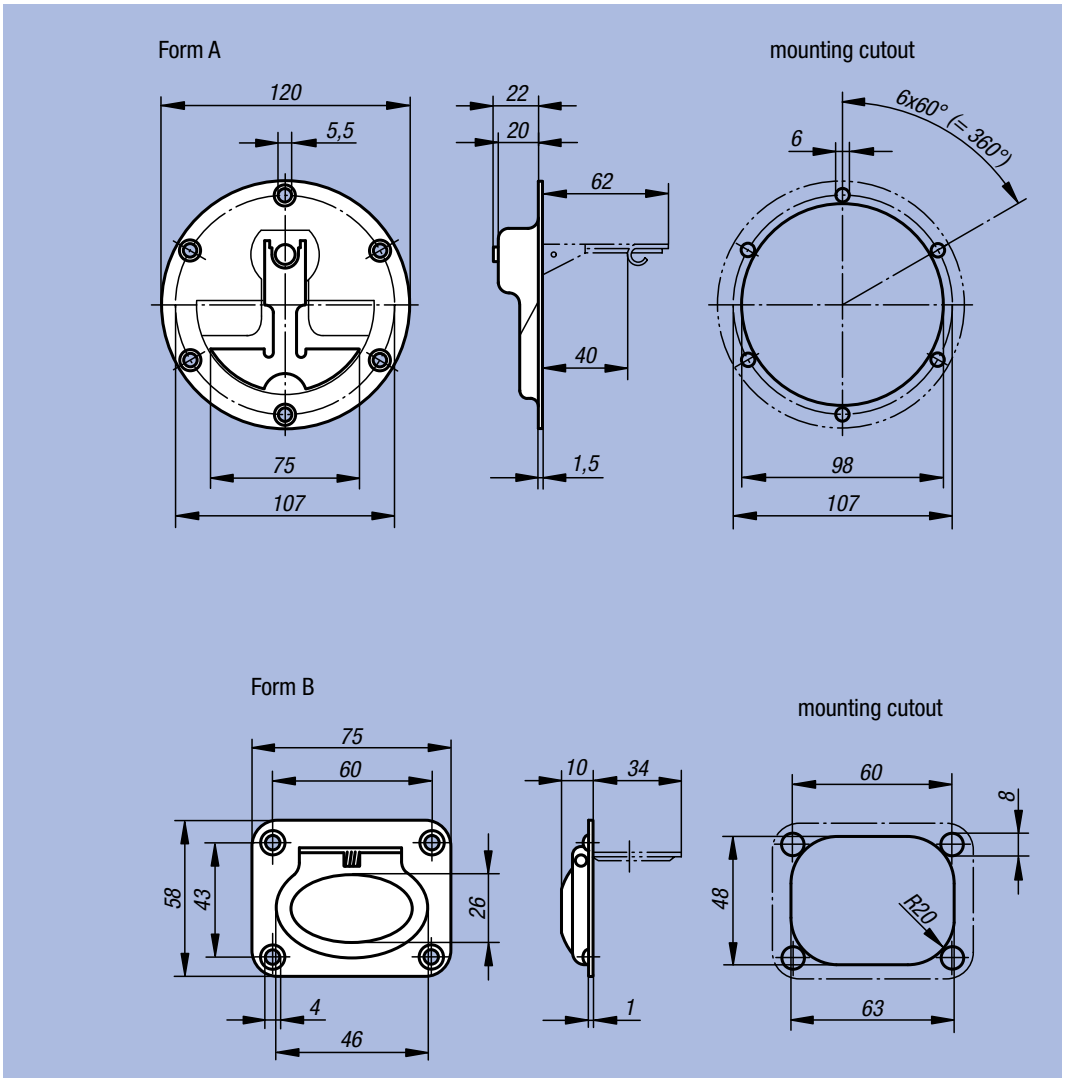

Order No.	Form	Load bearing capacity N	kg
06970-1120000	A	200	0,213
06970-2075058	B	200	0,051

Machine Handles



Material:
Glass-ball reinforced thermoplastic PA

Surface finish:
Black.

Sample order:
nlm 06975-100081
nlm 06975-1
(1 packaging unit = 2 pieces)

Note:
Machine handles with ergonomic shape and reach-through protection for the hands. For installation on doors, flaps and aluminium profiles. Ideal for double-winged retractable doors. Fasten with hexagonal or socket head screw M8.

Covering caps are not included in delivery.

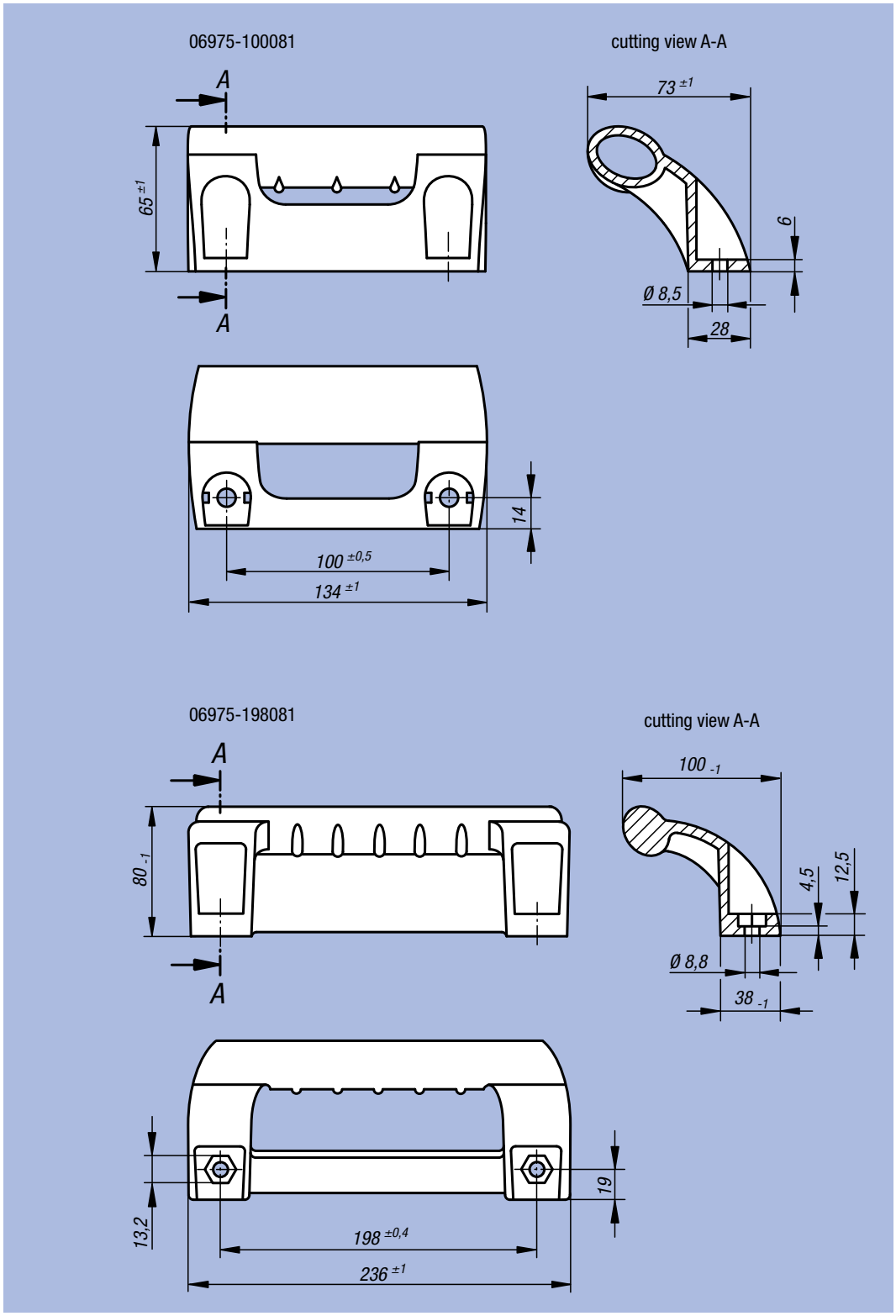



Order No.	Load bearing capacity N	kg	Order No. cover caps
06975-100081	1000	0,114	06975-1
06975-198081	1000	0,356	06975-3

Notes:

07000

Sets of fixing components

- Screws
- Nuts
- Washers
- Grub Screws
- Grippers
- Threaded Inserts
- Lifting Eye Bolts
- Side Pull Rings
- Sundry parts



Studs



Material:
Tempered steel 1.1181

Surface finish:
Heat-treated class 8.8, black oxide finish

Sample order:
nlm 07020-308

Note:
Permissible load: see Technical Information.

On request:
Stainless steel.

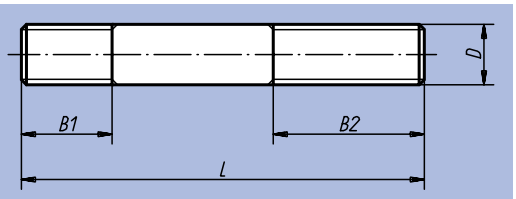

Order No.	D	L	B1	B2	g
07020-105	M5	20	7	10	3
07020-205	M5	30	7	10	4
07020-106	M6	25	10	12	4
07020-206	M6	35	10	12	5
07020-306	M6	45	10	12	10
07020-406	M6	60	10	12	14
07020-108	M8	40	12	25	13
07020-208	M8	50	12	25	17
07020-308	M8	70	12	25	25
07020-408	M8	80	12	25	28
07020-110	M10	50	15	30	25
07020-210	M10	67	15	30	35
07020-310	M10	80	15	30	45
07020-410	M10	100	15	30	55
07020-112	M12	56	18	30	40
07020-212	M12	67	18	30	50
07020-312	M12	80	18	30	62
07020-412	M12	100	18	30	80
07020-512	M12	125	18	30	102
07020-114	M14	60	20	30	60
07020-214	M14	80	20	30	82
07020-314	M14	100	20	30	105
07020-414	M14	125	20	30	135
07020-514	M14	150	20	30	170
07020-116	M16	75	25	30	100
07020-216	M16	100	25	30	140
07020-316	M16	125	25	30	175
07020-416	M16	150	25	30	220
07020-120	M20	100	30	40	210
07020-220	M20	125	30	40	270
07020-320	M20	150	30	40	340
07020-420	M20	180	30	40	410

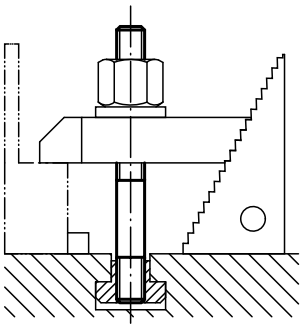

Rolled Thread Studs

DIN 6379



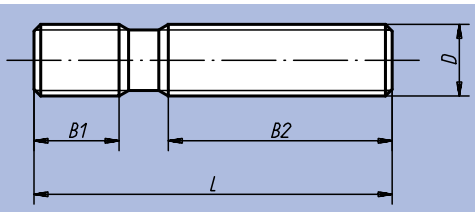

Material:
Tempered steel

Surface finish:
Thread rolled;
class 10.9 heat-treated for M6-M12, black; class 8.8 heat-treated for M14-M36, black

Sample order:
nlm 07030-12125

Note:
Permissible load: see Technical Information.

Order No.	D	L	B1	B2	≈ g
07030-0632	M6	32	9	16	8
07030-0640	M6	40	9	20	9
07030-0650	M6	50	9	30	11
07030-0663	M6	63	9	40	14
07030-0680	M6	80	9	50	18
07030-06100	M6	100	9	63	20
07030-0840	M8	40	11	20	10
07030-0863	M8	63	11	40	20
07030-0880	M8	80	11	50	27
07030-08100	M8	100	11	63	30
07030-08125	M8	125	11	75	40
07030-08160	M8	160	11	100	45
07030-1050	M10	50	13	25	25
07030-1080	M10	80	13	50	40
07030-10100	M10	100	13	75	50
07030-10125	M10	125	13	75	62
07030-10160	M10	160	13	100	80
07030-10200	M10	200	13	125	100
07030-1250	M12	50	15	25	35
07030-1263	M12	63	15	32	45
07030-1280	M12	80	15	50	55
07030-12100	M12	100	15	63	70
07030-12125	M12	125	15	75	90
07030-12160	M12	160	15	100	113
07030-12200	M12	200	15	125	140
07030-1463	M14	63	17	32	80
07030-1480	M14	80	17	50	85
07030-14100	M14	100	17	63	95
07030-14125	M14	125	17	75	120
07030-14160	M14	160	17	100	150
07030-14200	M14	200	17	125	195
07030-14250	M14	250	17	160	240
07030-1663	M16	63	19	32	85
07030-1680	M16	80	19	50	105
07030-16100	M16	100	19	63	130
07030-16125	M16	125	19	75	160
07030-16160	M16	160	19	100	210
07030-16200	M16	200	19	125	280
07030-16250	M16	250	19	160	325
07030-16315	M16	315	19	180	425
07030-16350	M16	350	19	200	460
07030-16500	M16	500	20	315	650
07030-1880	M18	80	23	50	130
07030-18125	M18	125	23	75	200
07030-18160	M18	160	23	100	255

Order No.	D	L	B1	B2	≈ g
07030-18200	M18	200	23	125	320
07030-18250	M18	250	23	150	400
07030-18315	M18	315	23	180	500
07030-2080	M20	80	27	32	185
07030-20125	M20	125	27	70	255
07030-20160	M20	160	27	100	330
07030-20200	M20	200	27	125	410
07030-20250	M20	250	27	160	510
07030-20315	M20	315	27	200	640
07030-20400	M20	400	27	250	815
07030-20500	M20	500	27	315	1020
07030-22100	M22	100	31	45	270
07030-22160	M22	160	31	100	430
07030-22200	M22	200	31	125	500
07030-22250	M22	250	31	160	670
07030-22315	M22	315	31	180	790
07030-22400	M22	400	31	250	1070
07030-24100	M24	100	35	45	290
07030-24125	M24	125	35	63	380
07030-24160	M24	160	35	100	470
07030-24200	M24	200	35	125	580
07030-24250	M24	250	35	160	730
07030-24315	M24	315	35	200	920
07030-24400	M24	400	35	250	1160
07030-24500	M24	500	35	315	1460
07030-24630	M24	630	35	315	1850
07030-27125	M27	125	39	56	485
07030-27200	M27	200	39	125	770
07030-27315	M27	315	39	200	1110
07030-27400	M27	400	39	250	1535
07030-27500	M27	500	39	315	1930
07030-30125	M30	125	43	56	590
07030-30200	M30	200	43	125	950
07030-30315	M30	315	43	200	1490
07030-30500	M30	500	43	315	2360
07030-30700	M30	700	43	400	3300
07030-301000	M30	1000	44	400	4700
07030-36160	M36	160	51	80	1100
07030-36200	M36	200	51	125	1380
07030-36250	M36	250	51	160	1710
07030-36315	M36	315	51	200	2150
07030-36400	M36	400	51	250	2740
07030-36500	M36	500	51	315	3540
07030-36700	M36	700	51	400	4780

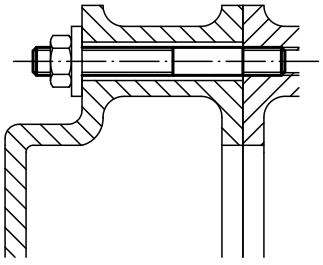

Rolled Thread T-Slot Bolts

DIN 787



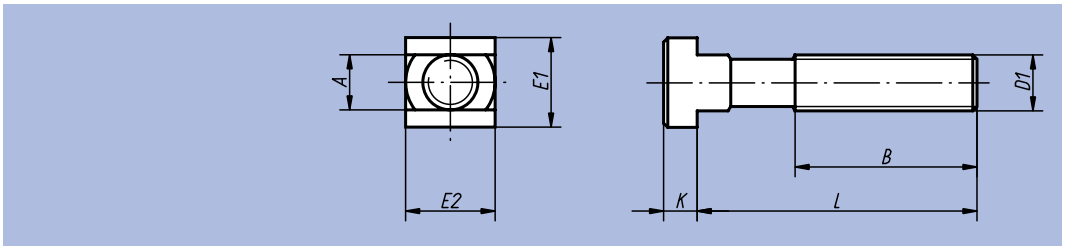

Material:
Tempered steel

Surface finish:
Forged, milled guide slot, rolled thread; class 10.9 heat-treated for M6-M12, black; class 8.8 heat-treated for M14-M42, black

Sample order:
nlm 07040-1263

Note:
Permissible load: see page Technical Information. Bolts with a higher quality class: see next product page.

Order No.	Nominal size of slot	D1	L	A	B	E1/ E2	K	□ g
07040-0625	6	M6	25	5,7	15	10	4	9
07040-0640	6	M6	40	5,7	28	10	4	12
07040-0663	6	M6	63	5,7	40	10	4	18
07040-0832	8	M8	32	7,7	22	13	6	20
07040-0850	8	M8	50	7,7	35	13	6	25
07040-0880	8	M8	80	7,7	50	13	6	30
07040-1040	10	M10	40	9,7	30	15	6	30
07040-1063	10	M10	63	9,7	45	15	6	50
07040-10100	10	M10	100	9,7	60	15	6	70
07040-1250	12	M12	50	11,7	35	18	7	60
07040-1263	12	M12	63	11,7	40	18	7	65
07040-1280	12	M12	80	11,7	55	18	7	75
07040-12100	12	M12	100	11,7	65	18	7	90
07040-12125	12	M12	125	11,7	75	18	7	110
07040-12160	12	M12	160	11,7	100	18	7	135
07040-12200	12	M12	200	11,7	120	18	7	160
07040-1450	14	M12	50	13,7	35	22	8	70
07040-1463	14	M12	63	13,7	45	22	8	80
07040-1480	14	M12	80	13,7	55	22	8	100
07040-14100	14	M12	100	13,7	65	22	8	110
07040-14125	14	M12	125	13,7	75	22	8	120
07040-14160	14	M12	160	13,7	100	22	8	150
07040-14200	14	M12	200	13,7	120	22	8	180
07040-16631	16	M14	63	15,7	45	25	9	115
07040-16801	16	M14	80	15,7	55	25	9	130
07040-161001	16	M14	100	15,7	65	25	9	150
07040-161251	16	M14	125	15,7	75	25	9	180
07040-161601	16	M14	160	15,7	100	25	9	220
07040-162501	16	M14	250	15,7	150	25	9	300
07040-1663	16	M16	63	15,7	45	25	9	140
07040-1680	16	M16	80	15,7	55	25	9	160
07040-16100	16	M16	100	15,7	65	25	9	180
07040-16125	16	M16	125	15,7	85	25	9	225
07040-16160	16	M16	160	15,7	100	25	9	260
07040-16200	16	M16	200	15,7	125	25	9	315
07040-16250	16	M16	250	15,7	150	25	9	380
07040-1863	18	M16	63	17,7	45	28	10	160
07040-1880	18	M16	80	17,7	55	28	10	185
07040-18100	18	M16	100	17,7	65	28	10	203
07040-18125	18	M16	125	17,7	85	28	10	245
07040-18160	18	M16	160	17,7	100	28	10	280

Order No.	Nominal size of slot	D1	L	A	B	E1/ E2	K	□ g
07040-18200	18	M16	200	17,7	125	28	10	330
07040-18250	18	M16	250	17,7	150	28	10	430
07040-2080	20	M20	80	19,7	55	32	12	290
07040-20100	20	M20	100	19,7	65	32	12	340
07040-20125	20	M20	125	19,7	85	32	12	390
07040-20160	20	M20	160	19,7	110	32	12	470
07040-20200	20	M20	200	19,7	125	32	12	550
07040-20250	20	M20	250	19,7	150	32	12	670
07040-20315	20	M20	315	19,7	190	32	12	800
07040-2280	22	M20	80	21,7	55	35	14	330
07040-22100	22	M20	100	21,7	65	35	14	400
07040-22125	22	M20	125	21,7	85	35	14	428
07040-22160	22	M20	160	21,7	110	35	14	500
07040-22200	22	M20	200	21,7	125	35	14	570
07040-22250	22	M20	250	21,7	150	35	14	680
07040-22315	22	M20	315	21,7	190	35	14	820
07040-24100	24	M24	100	23,7	70	40	16	540
07040-24125	24	M24	125	23,7	85	40	16	640
07040-24160	24	M24	160	23,7	110	40	16	770
07040-24200	24	M24	200	23,7	125	40	16	900
07040-24250	24	M24	250	23,7	150	40	16	1040
07040-24315	24	M24	315	23,7	190	40	16	1270
07040-24400	24	M24	400	23,7	240	40	16	1410
07040-28100	28	M24	100	27,7	70	44	18	650
07040-28125	28	M24	125	27,7	85	44	18	720
07040-28160	28	M24	160	27,7	110	44	18	800
07040-28200	28	M24	200	27,7	125	44	18	950
07040-28250	28	M24	250	27,7	150	44	18	1120
07040-28315	28	M24	315	27,7	190	44	18	1350
07040-28400	28	M24	400	27,7	240	44	18	1490
07040-36125	36	M30	125	35,6	80	54	22	1250
07040-36160	36	M30	160	35,6	110	54	22	1440
07040-36200	36	M30	200	35,6	135	54	22	1630
07040-36250	36	M30	250	35,6	150	54	22	1920
07040-36315	36	M30	315	35,6	200	54	22	2300
07040-36500	36	M30	500	35,6	300	54	22	3300
07040-42160	42	M36	160	41,6	100	65	26	2200
07040-42250	42	M36	250	41,6	175	65	26	2820
07040-42400	42	M36	400	41,6	250	65	26	3930
07040-42600	42	M36	600	41,6	340	65	26	5480

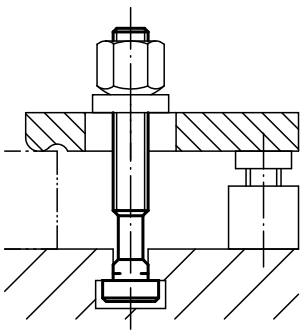

Rolled Thread T-Slot Bolts

DIN 787



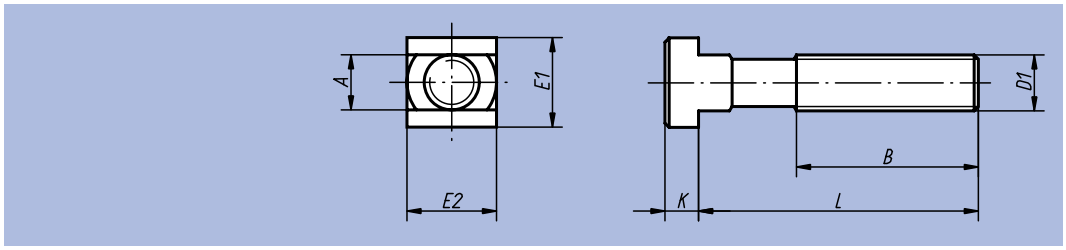

Material:
Tempered steel

Surface finish:
Forged, milled guide slot, rolled thread; class 12.9 heat-treated, black

Sample order:
nlm 07040-112125

Note:
Permissible load: see Technical Information.

Order No.	Nominal size of slot	D1	L	A	B	E1/E2	K	▫g
07040-11250	12	M12	50	11,7	35	18	7	60
07040-11280	12	M12	80	11,7	55	18	7	75
07040-112100	12	M12	100	11,7	65	18	7	90
07040-112125	12	M12	125	11,7	75	18	7	110
07040-112160	12	M12	160	11,7	100	18	7	135
07040-112200	12	M12	200	11,7	120	18	7	160
07040-11450	14	M12	50	13,7	35	22	8	70
07040-11480	14	M12	80	13,7	55	22	8	100
07040-114100	14	M12	100	13,7	65	22	8	110
07040-114125	14	M12	125	13,7	75	22	8	120
07040-114160	14	M12	160	13,7	100	22	8	150
07040-114200	14	M12	200	13,7	120	22	8	180
07040-11663	16	M16	63	15,7	45	25	9	140
07040-116100	16	M16	100	15,7	65	25	9	180
07040-116125	16	M16	125	15,7	85	25	9	225
07040-116160	16	M16	160	15,7	100	25	9	260
07040-116250	16	M16	250	15,7	150	25	9	380
07040-11863	18	M16	63	17,7	45	28	10	160
07040-118100	18	M16	100	17,7	65	28	10	203
07040-118125	18	M16	125	17,7	85	28	10	230
07040-118160	18	M16	160	17,7	100	28	10	280
07040-118250	18	M16	250	17,7	150	28	10	430
07040-12080	20	M20	80	19,7	55	32	12	290
07040-120125	20	M20	125	19,7	85	32	12	390
07040-120200	20	M20	200	19,7	125	32	12	550
07040-120315	20	M20	315	19,7	190	32	12	800
07040-12280	22	M20	80	21,7	55	35	14	330
07040-122125	22	M20	125	21,7	85	35	14	428
07040-122200	22	M20	200	21,7	125	35	14	570
07040-122315	22	M20	315	21,7	190	35	14	820
07040-124100	24	M24	100	23,7	70	40	16	540
07040-124160	24	M24	160	23,7	110	40	16	770
07040-124250	24	M24	250	23,7	150	40	16	1040
07040-124400	24	M24	400	23,7	240	40	16	1410
07040-128100	28	M24	100	27,7	70	44	18	650
07040-128160	28	M24	160	27,7	110	44	18	800
07040-128250	28	M24	250	27,7	150	44	18	1120
07040-128400	28	M24	400	27,7	240	44	18	1490

Nuts for T-slots

to DIN 508 extended



Material:
Tempered steel quality class 10,
EN AW-7075 or stainless steel 1.4305

Surface finish:
Steel black, aluminium and stainless steel natural finish

Sample order:
nlm 07060-20

Note:
Nuts for T-slots in aluminium have threaded steel inserts.

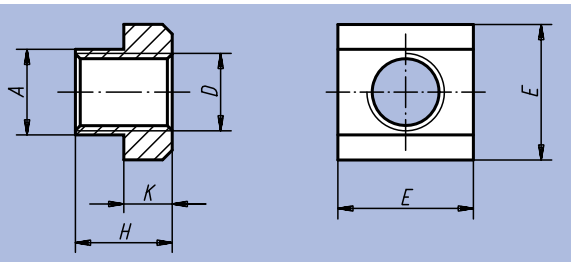

Order No. Material steel	Order No. Material aluminium	Order No. Material stainless steel	Nominal size of slot	D steel	D aluminium	A	E	H	K
07060-05	07060-204	-	6	M5	M4	5,6	10	8	4
07060-06	07060-206	07060-806	8	M6	M6	7,6	13	10	6
07060-061	07060-2061	-	10	M6	M6	9,6	15	12	6
07060-08	-	07060-808	10	M8	-	9,6	15	12	6
07060-081	07060-208	-	12	M8	M8	11,5	18	14	7
07060-10	-	07060-810	12	M10	-	11,5	18	14	7
07060-082	-	-	14	M8	-	13,5	22	16	8
07060-101	07060-210	-	14	M10	M10	13,5	22	16	8
07060-12	-	07060-812	14	M12	-	13,5	22	16	8
07060-121	-	-	16	M12	-	15,6	25	18	9
07060-14	-	07060-814	16	M14	-	15,6	25	18	9
07060-122	-	-	18	M12	-	17,5	28	20	10
07060-141	-	-	18	M14	-	17,5	28	20	10
07060-16	-	07060-816	18	M16	-	17,5	28	20	10
07060-123	-	-	20	M12	-	19,6	32	24	12
07060-161	-	-	20	M16	-	19,6	32	24	12
07060-18	-	-	20	M18	-	19,6	32	24	12
07060-124	07060-216	-	22	M12	M16	21,6	35	28	14
07060-181	-	-	22	M18	-	21,6	35	28	14
07060-20	-	-	22	M20	-	21,6	35	28	14
07060-163	-	-	24	M16	-	23,6	40	32	16
07060-201	-	-	24	M20	-	23,6	40	32	16
07060-22	-	-	24	M22	-	23,6	40	32	16
07060-164	-	-	28	M16	-	27,6	44	36	18
07060-202	-	-	28	M20	-	27,6	44	36	18
07060-24	-	-	28	M24	-	27,6	44	36	18
07060-27	-	-	32	M27	-	31,5	50	40	20
07060-241	-	-	36	M24	-	35,5	54	44	22
07060-30	-	-	36	M30	-	35,5	54	44	22
07060-36	-	-	42	M36	-	41,5	65	52	26

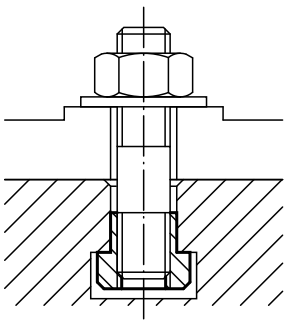

T-Nuts

long



Material:
Tempered steel

Surface finish:
Heat-treated class 10

Sample order:
nlm 07061-12

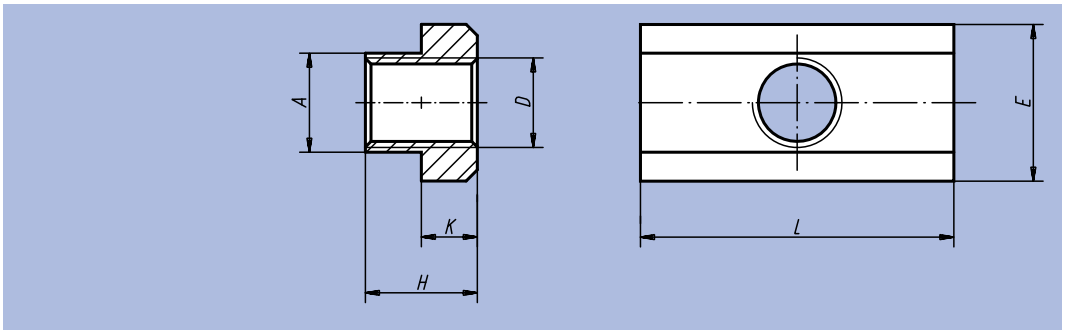

Order No.	Nominal size of slot	D	A	E	L	H	K	kg
07061-08	10	M8	9,7	15	30	12	6	0,030
07061-10	12	M10	11,7	18	36	14	7	0,050
07061-12	14	M12	13,7	22	44	16	8	0,070
07061-14	16	M14	15,7	25	50	18	9	0,120
07061-16	18	M16	17,7	28	56	20	10	0,170
07061-18	20	M18	19,7	32	64	24	12	0,260
07061-20	22	M20	21,7	35	70	28	14	0,360
07061-24	28	M24	27,7	44	88	36	18	0,730
07061-30	36	M30	35,6	54	108	44	22	1,400

Nuts for T-slots

blanks



Material:
Tempered steel or stainless steel 1.4305

Sample order:
nlm 07070-16

Note:
These blank nuts are used to make Nuts for T-slots with all sorts of thread sizes cost-effectively.

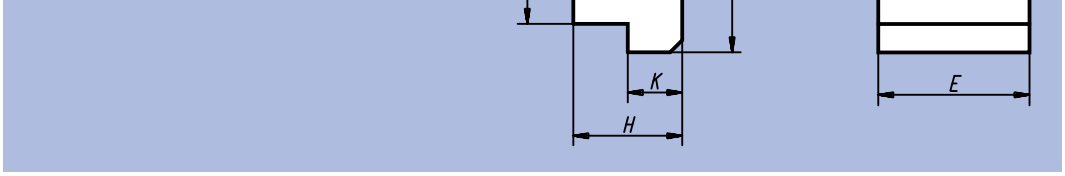

Order No. Material steel	Order No. Material stainless steel	Nominal size of slot	A	E	H	K
07070-06	-	6	5,6	10	8	4
07070-08	07070-808	8	7,6	13	10	6
07070-10	07070-810	10	9,6	15	12	6
07070-12	07070-812	12	11,5	18	14	7
07070-14	07070-814	14	13,5	22	16	8
07070-16	-	16	15,6	25	18	9
07070-18	-	18	17,5	28	20	10
07070-20	-	20	19,6	32	24	12
07070-22	-	22	21,6	35	28	14
07070-24	-	24	23,6	40	32	16
07070-28	-	28	27,6	44	36	18
07070-36	-	36	35,5	54	44	22
07070-42	-	42	41,6	65	52	26

Rhombic Nuts for T-slots



Material:
Tempered steel

Surface finish:
Heat-treated class 8, black oxide finish

Sample order:
nlm 07080-114

Note:
The benefit of Rhombic Nuts for T-slots is that they can be fitted in the slot from the top. They are particularly expedient for long T-slots, or when the configuration on the machine table does not permit clamping screws or nuts for T-slots to be inserted from the side.

Application:
Fit the Rhombic Nut in the slot, turn it by 90° and check that it is wedged in the slot.

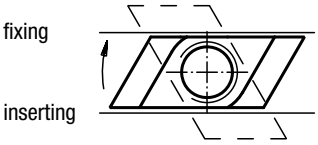

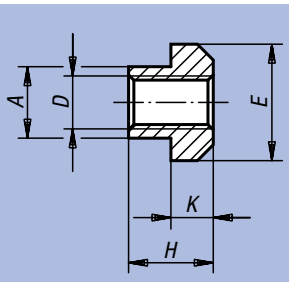

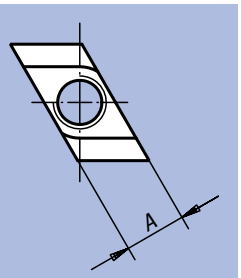

Order No.	Nominal size of slot	D	A	E	H	K	kg
07080-105	6	M5	5,6	10	8	4	0,005
07080-106	8	M6	7,6	13	10	6	0,007
07080-108	10	M8	9,7	15	12	6	0,009
07080-110	12	M10	11,7	18	14	7	0,011
07080-210	14	M10	13,5	22	16	8	0,020
07080-310	18	M10	17,5	28	20	10	0,048
07080-112	14	M12	13,7	22	16	8	0,020
07080-114	16	M14	15,7	25	18	9	0,030
07080-116	18	M16	17,7	28	20	10	0,045
07080-216	20	M16	19,7	32	24	12	0,070
07080-316	22	M16	21,5	35	28	14	0,095
07080-416	28	M16	27,5	44	36	18	0,215
07080-118	20	M18	19,7	32	24	12	0,070
07080-120	22	M20	21,7	35	28	14	0,095
07080-124	28	M24	27,7	44	36	18	0,215
07080-130	36	M30	35,6	54	44	22	0,430
07080-136	42	M36	41,5	65	52	26	0,690

Ball Pressure Screws with hexagon socket head



Material:
Screw in tempered steel, ball in ball-bearing steel

Surface finish:
Black screw, quality class 10.9; ball hardened, natural finish

Sample order:
nlm 07100-10820

Note:
Form A with full ball is used when a clean, polished pressure surface is required. Surfaces which are not plane and parallel can be firmly clamped or supported with form B with flattened ball because the movable ball can adapt itself up to 9°.

Form A
with full ball

Form B
with flattened ball

Form F
with serrated, flattened ball

Form BV
flattened ball
with torsion protection

Form FV
serrated, flattened ball
with torsion protection

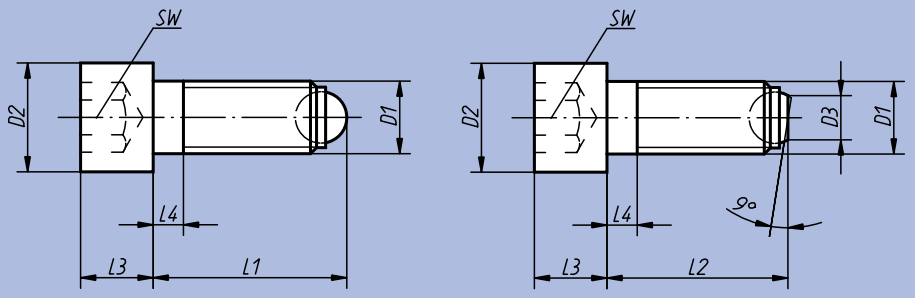

Order No. Form A	Order No. Form B	Order No. Form F	D1	L1	L2	D2	D3	L3	L4	Ball-Ø	SW	Load capacity max. kN (static load only)	◻ g
07100-10620	07100-20620	-	M6	20,8	20	10	3,2	6	3	4	5	9	6,6
07100-10630	07100-20630	-	M6	30,8	30	10	3,2	6	3	4	5	9	8,7
07100-10640	07100-20640	-	M6	40,8	40	10	3,2	6	16	4	5	9	11,0
07100-10820	07100-20820	-	M8	21,2	20	13	4,5	8	3,5	5,5	6	15	13,5
07100-10835	07100-20835	-	M8	36,2	35	13	4,5	8	3,5	5,5	6	15	19,0
07100-10850	07100-20850	-	M8	51,2	50	13	4,5	8	22	5,5	6	15	25,0
07100-11025	07100-21025	07100-31025	M10	26,7	25	16	6	10	4,5	7	8	20	26,0
07100-11040	07100-21040	07100-31040	M10	41,7	40	16	6	10	4,5	7	8	20	34,0
07100-11060	07100-21060	07100-31060	M10	61,7	60	16	6	10	28	7	8	20	47,0
07100-11230	07100-21230	07100-31230	M12	32	30	18	7,2	12	5	8,5	10	30	40,0
07100-11250	07100-21250	07100-31250	M12	52	50	18	7,2	12	5	8,5	10	30	56,0
07100-11280	07100-21280	07100-31280	M12	82	80	18	7,2	12	44	8,5	10	30	83,0
07100-11640	07100-21640	07100-31640	M16	43,3	40	24	10,7	16	6	12	14	60	91,0
07100-11660	07100-21660	07100-31660	M16	63,3	60	24	10,7	16	6	12	14	60	122,0
07100-11680	07100-21680	07100-31680	M16	83,3	80	24	10,7	16	36	12	14	60	154,0
07100-12050	07100-22050	-	M20	54,2	50	30	13,5	20	7,5	15	17	90	190,0
07100-12080	07100-22080	-	M20	84,2	80	30	13,5	20	28	15	17	90	260,0
07100-120100	07100-220100	-	M20	104,2	100	30	13,5	20	48	15	17	90	310,0
07100-12460	07100-22460	-	M24	64,7	60	36	15,8	24	9	18	19	120	330,0
07100-12490	07100-22490	-	M24	94,7	90	36	15,8	24	30	18	19	120	435,0
07100-124120	07100-224120	-	M24	124,7	120	36	15,8	24	60	18	19	120	540,0

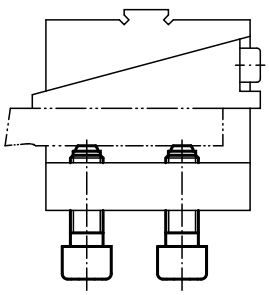

Order No. Form BV	Order No. Form FV	D1	L2	D2	D3	L3	L4	Ball-Ø	SW	Load capacity max. kN (static load only)	◻ g
07100-40820	-	M8	20	13	4,5	8	3,5	5,5	6	9	13,5
07100-40835	-	M8	35	13	4,5	8	3,5	5,5	6	9	19,0
07100-40850	-	M8	50	13	4,5	8	22	5,5	6	9	25,0
07100-41025	07100-51025	M10	25	16	6	10	4,5	7	8	12	26,0
07100-41040	07100-51040	M10	40	16	6	10	4,5	7	8	12	34,0
07100-41060	07100-51060	M10	60	16	6	10	28	7	8	12	47,0
07100-41230	07100-51230	M12	30	18	7,2	12	5	8,5	10	18	40,0
07100-41250	07100-51250	M12	50	18	7,2	12	5	8,5	10	18	56,0
07100-41280	07100-51280	M12	80	18	7,2	12	44	8,5	10	18	83,0
07100-41640	07100-51640	M16	40	24	10,7	16	6	12	14	36	91,0
07100-41660	07100-51660	M16	60	24	10,7	16	6	12	14	36	122,0
07100-41680	07100-51680	M16	80	24	10,7	16	36	12	14	36	154,0

Ball Pressure Screws with hexagon socket head

in stainless steel



Material, surface finish:
Stainless steel, natural finish

Sample order:
nlm 07101-11230

Note:
Form A with full ball is used when a clean, polished pressure surface is required. Surfaces which are not plane and parallel can be firmly clamped or supported with form B with flattened ball because the movable ball can adapt itself up to 9°.

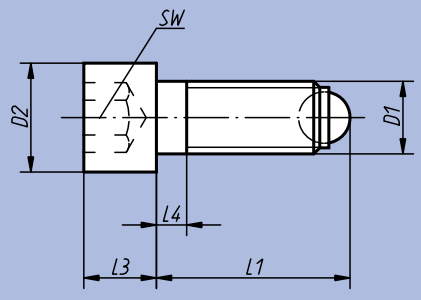

Form A
with full ball

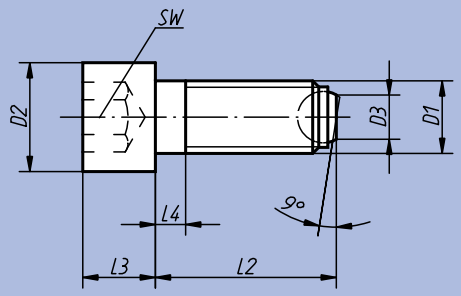

Form B
with flattened ball

Order No. Form A	Order No. Form B	D1	L1	L2	D2	D3	L3	L4	Ball-Ø	SW	g
07101-10620	07101-20620	M 6	20,8	20	10	3,2	6	3	4	5	6,6
07101-10630	07101-20630	M 6	30,8	30	10	3,2	6	3	4	5	8,7
07101-10640	07101-20640	M 6	40,8	40	10	3,2	6	16	4	5	11,0
07101-10820	07101-20820	M 8	21,2	20	13	4,5	8	3,5	5,5	6	13,5
07101-10835	07101-20835	M 8	36,2	35	13	4,5	8	3,5	5,5	6	19,0
07101-10850	07101-20850	M 8	51,2	50	13	4,5	8	22	5,5	6	25,0
07101-11025	07101-21025	M 10	26,7	25	16	6	10	4,5	7	8	26,0
07101-11040	07101-21040	M 10	41,7	40	16	6	10	4,5	7	8	34,0
07101-11060	07101-21060	M 10	61,7	60	16	6	10	28	7	8	47,0
07101-11230	07101-21230	M 12	32	30	18	7,2	12	5	8,5	10	48,0
07101-11250	07101-21250	M 12	52	50	18	7,2	12	5	8,5	10	56,0
07101-11280	07101-21280	M 12	82	80	18	7,2	12	44	8,5	10	83,0
07101-11640	07101-21640	M 16	43,3	40	24	10,7	16	6	12	14	91,0
07101-11660	07101-21660	M 16	63,3	60	24	10,7	16	6	12	14	122,0
07101-11680	07101-21680	M 16	83,3	80	24	10,7	16	36	12	14	154,0

Ball Pressure Screw without head

short model



Material:
Screw in tempered steel, ball in ball-bearing steel

Surface finish:
Screw class 10.9, black oxide finish; ball hardened, natural finish

Sample order:
nlm 07109-1416

Note:
Ball Pressure Screws, short model are particularly suited to DIN 1835 E cylindrical shafts in conjunction with Whistle Notch or Weldon tool holders, for example.

application example:

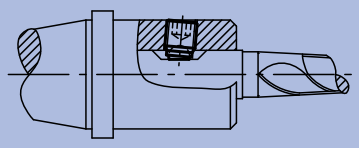

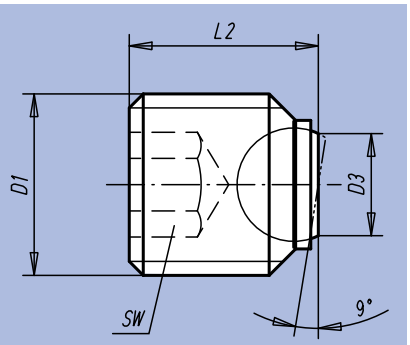

Order No.	D1	L2	D3	Ball-Ø	SW	Load capacity max. kN (static load only)	≈ g
07109-1416	M14	16	7,2	8,5	6	30	12,3
07109-1616	M16	16	7,2	8,5	8	30	15,2
07109-1820	M18x2	20	10,7	12	10	60	24,6
07109-2020	M20x2	20	10,7	12	10	60	30,9
07109-2025	M20x2	25	10,7	12	10	60	40,2
07109-2425	M24x2	25	13,5	15	12	90	57,8

Notes:

Ball Pressure Screws without head

with full ball



Material, surface finish:
Screw in tempered steel, quality class 10.9, black or stainless steel, natural finish; ball in ball-bearing steel, hardened with natural finish or stainless steel, natural finish

Sample order:
nlm 07110-10810

Note:
Form A with full ball is used when a clean, polished pressure surface is required.
Further lengths have been designed especially so that Ball Pressure Screws can be glued up. They allow mechanical connecting elements with external thread to be made cost-effectively for small and medium-sized series.

Statements on load capacity are not valid for stainless steel versions.

Form A
with full ball

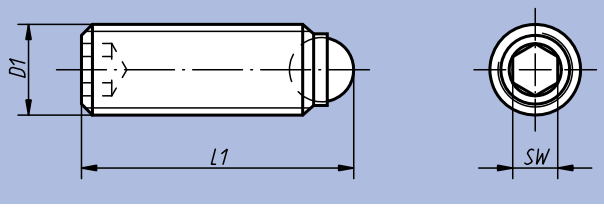

Order No. Material steel	Order No. Material stainless steel	D1	L1	Ball-Ø	SW	Load capacity max. kN (static load only)	≈ g
07110-1046	07111-1046	M4	6	2,5	2	3,5	0,4
-	07111-1048	M4	8	2,5	2	-	0,5
07110-10410	07111-10410	M4	10	2,5	2	3,5	0,7
07110-10412	07111-10412	M4	12	2,5	2	3,5	0,8
07110-10416	07111-10416	M4	16	2,5	2	3,5	1,1
07110-1058	07111-1058	M5	8	3	2,5	4,5	0,8
07110-10510	07111-10510	M5	10	3	2,5	4,5	0,9
07110-10512	07111-10512	M5	12	3	2,5	4,5	1,3
07110-10516	-	M5	16	3	2,5	4,5	1,5
07110-10520	07111-10520	M5	20	3	2,5	4,5	2,3
07110-10525	07111-10525						
07110-10610	07111-10610	M6	10,8	4	3	9	1,5
07110-10616	07111-10616	M6	16,8	4	3	9	2,4
07110-10620	07111-10620	M6	20,8	4	3	9	3,0
07110-10625	07111-10625	M6	25,8	4	3	9	3,9
07110-10650	-	M6	50,8	4	3	9	10,6
07110-10660	-	M6	60,8	4	3	9	13,5
07110-10810	07111-10810	M8	11,2	5,5	4	10	2,6
07110-10812	07111-10812	M8	13,2	5,5	4	10	3,2
07110-10820	07111-10820	M8	21,2	5,5	4	15	5,7
07110-10825	07111-10825	M8	26,2	5,5	4	15	7,3
07110-10830	07111-10830	M8	31,2	5,5	4	15	8,9
07110-10850	-	M8	51,2	5,5	4	15	18,8
07110-10860	-	M8	61,2	5,5	4	15	24,0
07110-10880	-	M8	81,2	5,5	4	15	30,7
07110-11012	07111-11012	M10	13,7	7	5	20	5,0
07110-11016	07111-11016	M10	17,7	7	5	20	6,8
07110-11020	07111-11020	M10	21,7	7	5	20	8,7
07110-11025	07111-11025	M10	26,7	7	5	20	11,2
07110-11035	07111-11035	M10	36,7	7	5	20	16,2
07110-11216	07111-11216	M12	18	8,5	6	30	10,0
07110-11220	07111-11220	M12	22	8,5	6	30	12,4
07110-11230	07111-11230	M12	32	8,5	6	30	19,6
07110-11240	07111-11240	M12	42	8,5	6	30	28,5
07110-11620	07111-11620	M16	23,3	12	8	60	22,0
07110-11625	07111-11625	M16	28,3	12	8	60	28,0
07110-11635	07111-11635	M16	38,3	12	8	60	41,0
07110-11650	07111-11650	M16	53,3	12	8	60	48,0
07110-12030	-	M20	34,2	15	10	90	54,0
07110-12040	-	M20	44,2	15	10	90	74,0
07110-12060	-	M20	64,2	15	10	90	120,0
07110-12435	-	M24	39,7	18	12	120	90,0
07110-12450	-	M24	54,7	18	12	120	130,0
07110-12480	-	M24	84,7	18	12	120	235,0

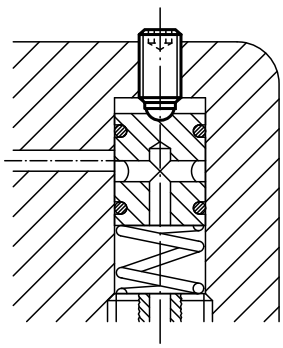

Ball Pressure Screws without head

with flattened ball



Material, surface finish:
Screw in tempered steel, quality class 10.9, black or stainless steel, natural finish; ball in ball-bearing steel, hardened with natural finish or stainless steel, natural finish

Sample order:
nlm 07110-41012

Note:
Surfaces which are not plane and parallel can be firmly clamped or supported with form B with flattened ball because the movable ball can adapt itself up to 9°.
Further lengths have been designed especially so that Ball Pressure Screws can be glued up. They allow mechanical connecting elements with external thread to be made cost-effectively for small and medium-sized series.

Statements on load capacity are not valid for stainless steel versions.

Form B
with flattened ball

Form F
with serrated, flattened ball

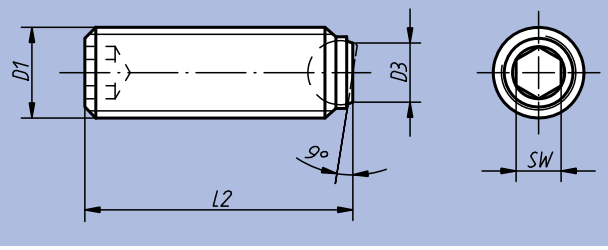

Order No. Form B Material steel	Order No. Form B Material stainless steel	Order No. Form F Material steel	D1	L2	D3	Ball-Ø	SW	Load capacity max. kN (static load only)
-	07111-2046	-	M4	5,8	1,4	2,5	2	-
-	07111-20410	-	M4	9,8	1,4	2,5	2	-
-	07111-20416	-	M4	15,8	1,4	2,5	2	-
-	07111-2058	-	M5	7,6	2	3	2,5	-
-	07111-20512	-	M5	11,6	2	3	2,5	-
-	07111-20520	-	M5	19,6	2	3	2,5	-
07110-20610	07111-20610	-	M6	10,1	2,6	4	3	9
07110-20616	07111-20616	-	M6	16,1	2,6	4	3	9
07110-20620	07111-20620	-	M6	20,1	2,6	4	3	9
07110-20625	07111-20625	-	M6	25,1	2,6	4	3	9
07110-20650	-	-	M6	50,3	2,6	4	3	9
07110-20660	-	-	M6	60,3	2,6	4	3	9
07110-20810	07111-20810	-	M8	10,3	4,1	5,5	4	10
07110-20812	07111-20812	-	M8	12,3	4,1	5,5	4	10
07110-20820	07111-20820	-	M8	20,3	4,1	5,5	4	15
07110-20825	07111-20825	-	M8	25,3	4,1	5,5	4	15
07110-20830	07111-20830	-	M8	30,3	4,1	5,5	4	15
07110-20850	-	-	M8	50,3	4,1	5,5	4	15
07110-20860	-	-	M8	60,3	4,1	5,5	4	15
07110-20880	-	-	M8	80,3	4,1	5,5	4	15
07110-21012	07111-21012	07110-41012	M10	12,3	5,6	7	5	20
07110-21016	07111-21016	07110-41016	M10	16,3	5,6	7	5	20
07110-21020	07111-21020	-	M10	20,3	5,6	7	5	20
07110-21025	07111-21025	07110-41025	M10	25,3	5,6	7	5	20
07110-21035	07111-21035	07110-41035	M10	35,3	5,6	7	5	20
07110-21216	07111-21216	07110-41216	M12	16,2	7	8,5	6	30
07110-21220	07111-21220	07110-41220	M12	20,2	7	8,5	6	30
07110-21230	07111-21230	07110-41230	M12	30,2	7	8,5	6	30
07110-21240	07111-21240	07110-41240	M12	40,2	7	8,5	6	30
07110-21620	07111-21620	07110-41620	M16	20	10,7	12	8	60
07110-21625	07111-21625	07110-41625	M16	25	10,7	12	8	60
07110-21635	07111-21635	07110-41635	M16	35	10,7	12	8	60
07110-21650	07111-21650	07110-41650	M16	50	10,7	12	8	60
07110-22030	-	-	M20	30	13,5	15	10	90
07110-22040	-	-	M20	40	13,5	15	10	90
07110-22060	-	-	M20	60	13,5	15	10	90
07110-22435	-	-	M24	35	15,8	18	12	120
07110-22450	-	-	M24	50	15,8	18	12	120
07110-22480	-	-	M24	80	15,8	81	12	120

Ball Pressure Screws without head

with flattened ball and torsion protection



Material, surface finish:
Screw in tempered steel, quality class 10.9, black;
ball in ball-bearing steel, hardened with natural finish

Sample order:
nlm 07110-50820

Note:
Surfaces which are not plane and parallel can be firmly clamped or supported with the flattened ball because the movable ball can adapt itself up to 9°.

Form BV
with flattened ball
and torsion protection

Form FV
with serrated, flattened ball
and torsion protection

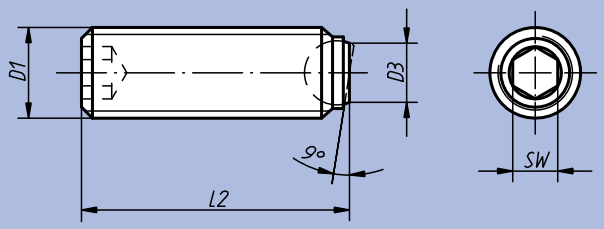

Order No. Form BV	Order No. Form FV	D1	L2	D3	Ball-Ø	SW	Load capacity max. kN (static load only)	g
07110-50820	-	M8	20,3	4,1	5,5	4	9	5,7
07110-50830	-	M8	30,3	4,1	5,5	4	9	8,9
07110-51025	07110-61025	M10	25,3	5,6	7	5	12	11,2
07110-51035	07110-61035	M10	35,3	5,6	7	5	12	16,2
07110-51230	07110-61230	M12	30,2	7	8,5	6	18	19,6
07110-51240	07110-61240	M12	40,2	7	8,5	6	18	28,5
07110-51635	07110-61635	M16	35	10,7	12	8	36	41,0
07110-51650	07110-61650	M16	50	10,7	12	8	36	48,0

Ball Pressure Screws without head



Material, surface finish:
Screw in tempered steel, quality class 10.9, black or stainless steel, natural finish; ball in delrin

Sample order:
nlm 07110-70516

Note:
Form D with full ball is used when a clean, polished pressure surface is required.
Surfaces which are not plane and parallel can be firmly clamped or supported with form C with flattened ball because the movable ball can adapt itself up to 9°.

Statements on load capacity are not valid for stainless steel versions.

Form D
with full ball

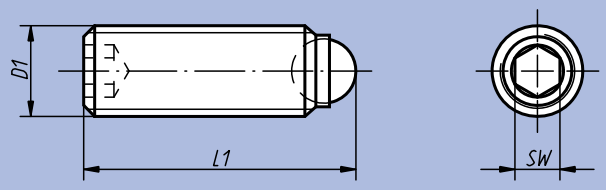

Form C
with flattened ball

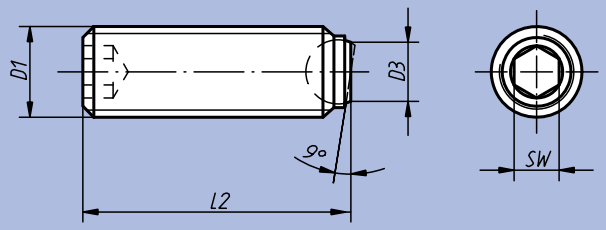

Order No. Form C Material steel	Order No. Form D Material steel	Order No. Form D Material stainless steel	D1	L1	L2	D3	Ball-Ø	SW	Load capacity max. kN (static load only)
07110-7046	07110-3046	07111-3046	M4	6	5,8	1,8	2,5	2	0,3
07110-7048	-	07111-3048	M4	8	7,8	1,8	2,5	2	0,3
07110-70410	07110-30410	07111-30410	M4	10	9,8	1,8	2,5	2	0,3
07110-70412	-	07111-30412	M4	12	11,8	1,8	2,5	2	0,3
07110-70416	07110-30416	07111-30416	M4	16	15,8	1,8	2,5	2	0,3
07110-7058	07110-3058	07111-3058	M5	8	7,6	2,1	3	2,5	0,5
07110-70510	07110-30510	07111-30510	M5	10	9,6	2,1	3	2,5	0,5
07110-70512	07110-30512	07111-30512	M5	12	11,6	2,1	3	2,5	0,5
07110-70516	07110-30516	-	M5	16	15,6	2,1	3	2,5	0,5
07110-70520	07110-30520	07111-30520	M5	20	19,6	2,1	3	2,5	0,5
07110-70525	07110-30525	07111-30525	M5	25	24,6	2,1	3	2,5	0,5
07110-70610	07110-30610	07111-30610	M6	10,8	10,1	3	4	3	0,9
07110-70612	-	-	M6	-	12,1	3	4	3	0,9
07110-70616	07110-30616	07111-30616	M6	16,8	16,1	3	4	3	0,9
07110-70620	07110-30620	07111-30620	M6	20,8	20,1	3	4	3	0,9
07110-70625	07110-30625	07111-30625	M6	25,8	25,1	3	4	3	0,9
07110-70810	07110-30810	07111-30810	M8	11,2	10,3	4,2	5,5	4	1,5
07110-70812	07110-30812	07111-30812	M8	13,2	12,3	4,2	5,5	4	1,5
07110-70816	-	-	M8	-	16,3	4,2	5,5	4	1,5
07110-70820	07110-30820	07111-30820	M8	21,2	20,3	4,2	5,5	4	1,5
07110-70825	07110-30825	07111-30825	M8	26,2	25,3	4,2	5,5	4	1,5
07110-70830	07110-30830	07111-30830	M8	31,2	30,3	4,2	5,5	4	1,5
-	07110-31012	-	M10	13,7	-	-	7	5	2
-	07110-31016	-	M10	17,7	-	-	7	5	2
-	07110-31020	-	M10	21,7	-	-	7	5	2
-	07110-31025	-	M10	26,7	-	-	7	5	2
-	07110-31035	-	M10	36,7	-	-	7	5	2
-	07110-31216	-	M12	18	-	-	8,5	6	3
-	07110-31220	-	M12	22	-	-	8,5	6	3
-	07110-31230	-	M12	32	-	-	8,5	6	3
-	07110-31240	-	M12	42	-	-	8,5	6	3

Baseplate metal carbide

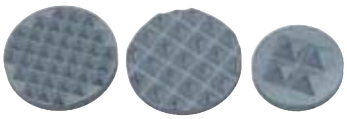

Material, surface finish:
Sintered metal carbide

Sample order:
nlm 07112-211

Note:
The metal carbide baseplates are available as 4-point bases and are ribbed. They can ge glued into the baseplates using strong glue.

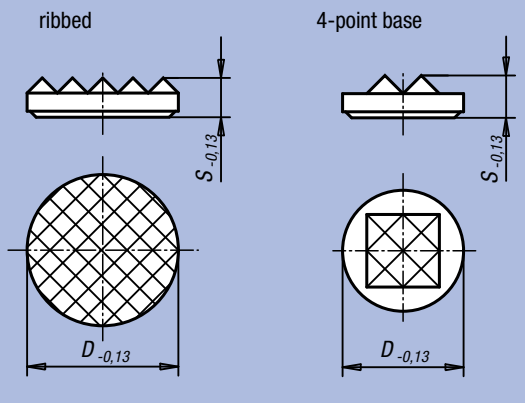

Order No.	Surface finish	D	S
07112-110	serrated	6,35	3,2
07112-111	serrated	7,9	3,2
07112-112	serrated	9,5	3,2
07112-113	serrated	12,7	3,2
07112-114	serrated	19,05	3,2
07112-211	fine serrated	7,9	3,2
07112-212	fine serrated	9,5	3,2
07112-213	fine serrated	12,7	3,2
07112-214	fine serrated	19,05	3,2
07112-215	fine serrated	25,4	4
07112-411	4-point support	7,9	3,2
07112-412	4-point support	9,5	3,2
07112-413	4-point support	12,7	4

Round Grippers and Inserts



Material, surface finish:
Form C in tool steel, hardened and black oxide finish
Form F in tool steel, hardened and black oxide finish
Form M in tool steel with hard metal serration, black oxide finish
Form K in white delrin

Sample order:
nlm 07113-2510

Note:
Grippers and Inserts are ideal for use in clamping arms, gripping systems, clamping fixtures, clamping jaws and toggle locators. Grippers transfer very high torque values and above average holding forces. This is also true when they are applied to hard materials and surface irregularities.

Grippers and Inserts can be fitted in the following Toggle Locators:
Order No. 02003-117X022 up to 02003-936X036
Order No. 02007-110X015 up to 02007-924X100
Order No. 02009-120X030 up to 02009-924X080

Form C
plain, flattened steel insert

Form K
plain, flattened delrin insert

Form F
serrated, flattened gripper

Form M
gripper flattened, serration in hard metal

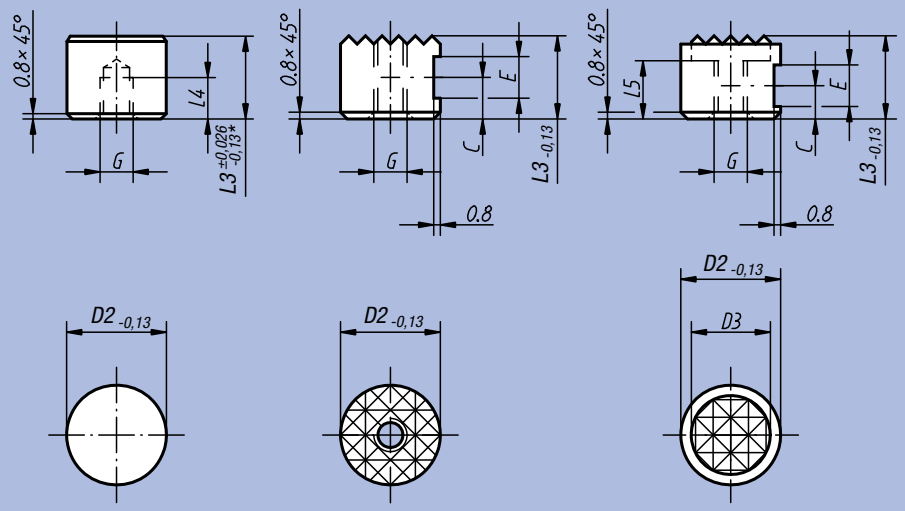

* Applies for form K

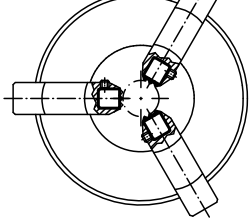

Order No. Form C	Order No. Form K	D2	L3	L4	G
07113-10108	07113-10109	10	10	5	M5
07113-12108	07113-12109	12	10	5	M5
07113-16108	07113-16109	16	10	5	M6
07113-20108	07113-20109	20	10	5	M6
07113-25108	07113-25109	25	10	5	M 6

Order No. Form F	Order No. Form M	D2	D3	L3	L5	C	E	G
07113-1010	07113-10107	10	7,9	10	6	4,5	4,75	M5
07113-1210	07113-12107	12	9,5	10	6	4,5	4,75	M5
07113-1212	07113-12127	12	9,5	12	7	6	4,75	M5
07113-1610	07113-16107	16	12,7	10	6	4,5	4,75	M6
07113-2010	07113-20107	20	15,9	10	6	4,5	4,75	M6
07113-2510	07113-25107	25	19	10	6	4,5	4,75	M6

Hexagonal Grippers



Material:
Hardened tool steel resp. hard metal

Surface finish:
Black oxide finish

Sample order:
nlm 07114-1710

Note:
The serrated hard metal tips are soldered in.

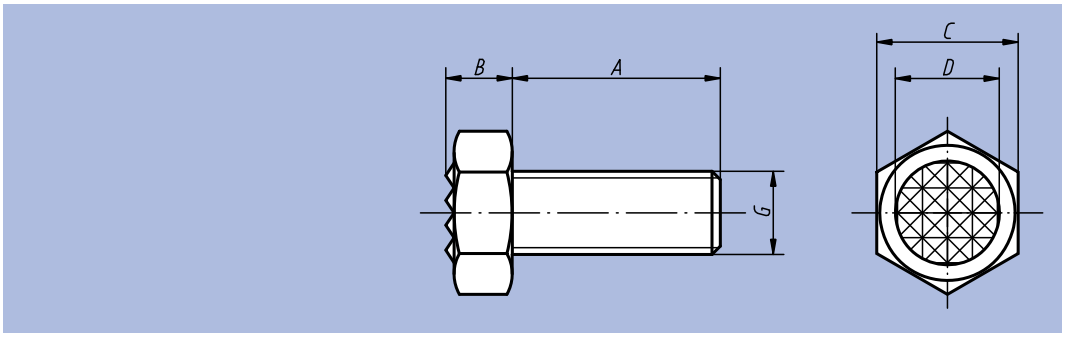

Order No.	A	B	C	D	G	Serration	kg
07114-1006	25	5	10	7,9	M6	superfine	0,005
07114-1308	25	6,4	13	9,5	M8	fine	0,015
07114-1710	25	8,3	17	12,7	M10	fine	0,025
07114-17102	40	8,3	17	12,7	M10	fine	0,035
07114-1912	25	8,7	19	15,9	M12	fine	0,040
07114-19122	40	8,7	19	15,9	M12	fine	0,050
07114-2416	35	11	24	19	M16	fine	0,085
07114-24162	50	11	24	19	M16	fine	0,105
07114-3020	40	13,7	30	25,4	M20	superfine	0,165
07114-30202	60	13,7	30	25,4	M20	superfine	0,205

Application: NORELEM grippers

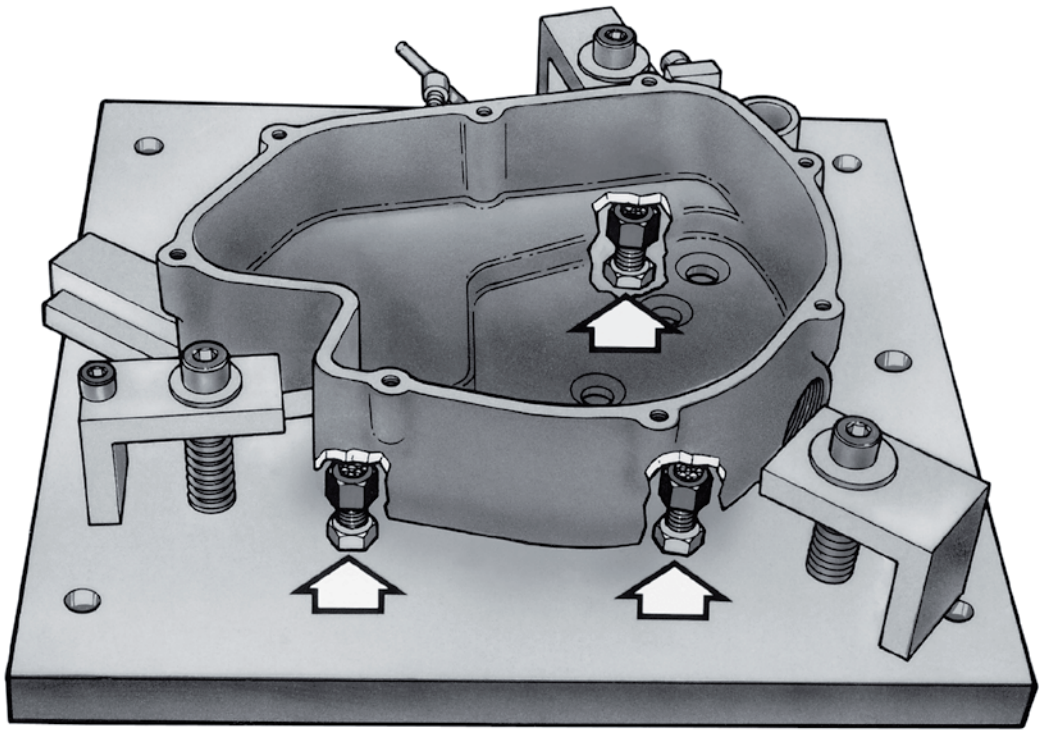

Square Grippers



Material:
Hardened tool steel resp. hard metal

Surface finish:
Black oxide finish

Sample order:
nlm 07115-2506

Note:
Grippers and Inserts are ideal for use in clamping arms, gripping systems, clamping fixtures, clamping jaws and toggle locators.
Grippers transfer very high torque values. This is also true when they are applied to hard materials and surface irregularities. Grippers guarantee above average holding forces at high cutting forces.
The serrated hard metal tips are soldered in.

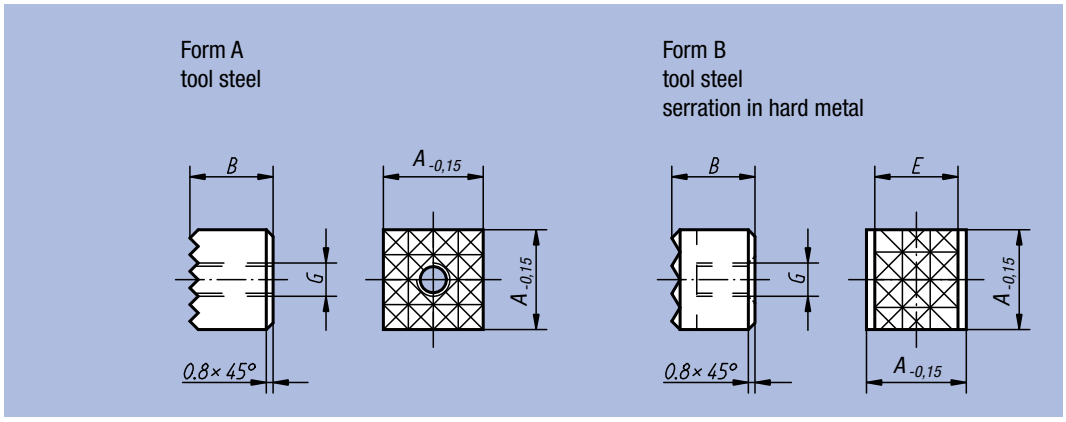

Order No.	Form	A	B	E	G	Serration	kg
07115-1005	A	10	10	-	M5	superfine	0,005
07115-1205	A	12	10	-	M5	fine	0,010
07115-2005	A	20	10	-	M5	fine	0,025
07115-2506	A	25	10	-	M6	fine	0,045
07115-12057	B	12	10	10,3	M5	fine	0,010

Hard metal baseplates

square

Material, surface finish:
Sintered metal carbide

Sample order:
nlm 07116-201

Note:
The hard metal baseplates are available ribbed and as a wedge shape. They can be glued in, for example using strong glue.

Order No.	Surface finish	A	B	S
07116-101	serrated	9,5 -0,13	9,5 -0,13	3,2
07116-102	serrated	12,7 -0,13	12,7 -0,13	3,2
07116-201	fine serrated	9,5 -0,13	9,5 -0,13	3,2
07116-202	fine serrated	12,7 -0,13	12,7 -0,13	3,2
07116-203	fine serrated	15,9 -0,13	15,9 -0,13	3,2
07116-206	fine serrated	19,05 -0,13	19,05 -0,13	4
07116-207	fine serrated	25,4 -0,13	25,4 -0,13	4
07116-308	wedge-shaped	25,4 +0,25	13,05 +0,25	4,8
07116-309	wedge-shaped	38,1 +0,5	19,5 +0,3	6,35

Adjustable Grippers



Material:
Hardened tool steel or hard metal

Surface finish:
Black oxide finish

Sample order:
nlm 07117-5012

Note:
The continuous external thread of the Adjustable Grippers allows exact adjusting to the clamping job.
The hard metal tips are soldered in.



Form A
tool steel

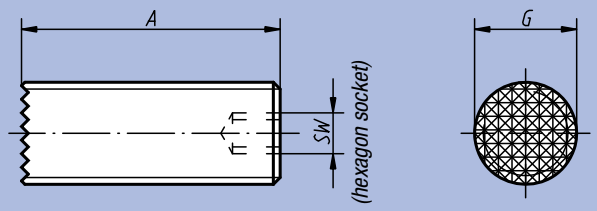

Form B
serration in hard metal

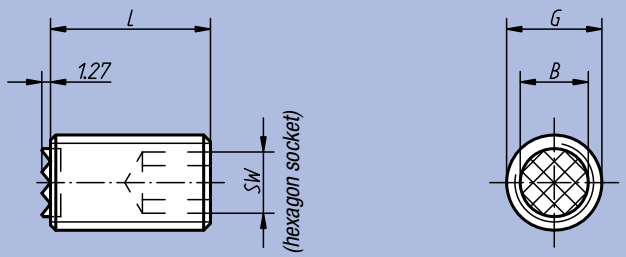

Form C
4-point-serration in hard metal

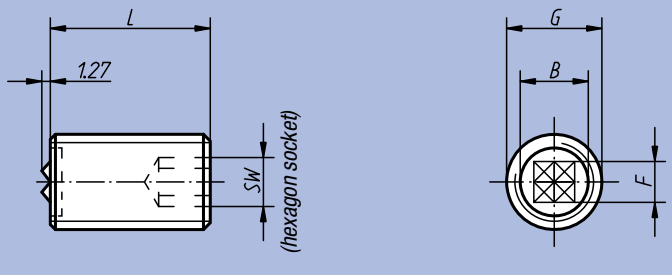

Order No.	Form	A	L	B	G	F	SW
07117-4010	A	40	-	-	M10	-	3
07117-4012	A	40	-	-	M12	-	5
07117-4016	A	40	-	-	M16	-	6
07117-4020	A	40	-	-	M20	-	8
07117-2510	B	-	25	6,4	M10	-	5
07117-5010	B	-	50	6,4	M10	-	5
07117-2512	B	-	25	7,9	M12	-	6
07117-5012	B	-	50	7,9	M12	-	6
07117-2516	B	-	25	11,2	M16	-	8
07117-5016	B	-	50	11,2	M16	-	8
07117-2520	B	-	25	12,7	M20	-	10
07117-5020	B	-	50	12,7	M20	-	10
07117-25124	C	-	25	7,9	M12	6,5	6
07117-50124	C	-	50	7,9	M12	6,5	6
07117-25164	C	-	25	11,2	M16	8	8
07117-50164	C	-	50	11,2	M16	8	8
07117-25204	C	-	25	12,7	M20	8	10
07117-50204	C	-	50	12,7	M20	8	10

Pressure Screws



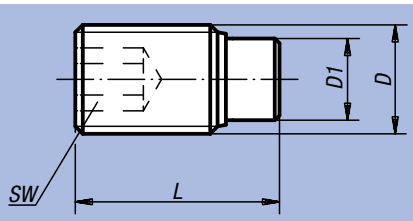

Material:
Screw quality class 10.9,
bolt in brass or delrin

Surface finish:
Screw black oxide finish

Sample order:
nlm 07119-04X105
(please also indicate dimension L)

Note:
The brass bolt is pressed into the pressure screw. Pressure Screws are particularly suitable for protective clamping or for pressing on threaded spindles, axles, shafts and surface-treated parts.
Further lengths have been designed especially so that Pressure Screws can be glued up. They allow mechanical connecting elements with external thread to be made cost-effectively for small and medium-sized series.

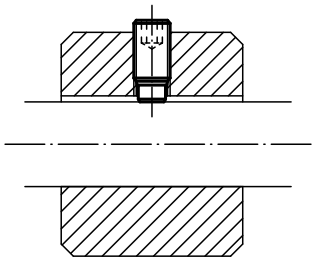

Order No.	Surface finish	D	D1	L	SW
07119-04X	bolt brass	M4	2,5	6,5 / 10,5 / 16,5 / 30,5 / 40,5	2
07119-05X	bolt brass	M5	3	8,5 / 12,5 / 20,5 / 30,5 / 40,5	2,5
07119-06X	bolt brass	M6	4	11,5 / 17,5 / 26,5 / 41,5 / 51,5 / 61,5	3
07119-08X	bolt brass	M8	5,5	12 / 22 / 32 / 52 / 62 / 82	4
07119-10X	bolt brass	M10	7	14 / 18 / 27 / 37 / 52 / 62 / 82	5
07119-12X	bolt brass	M12	8,5	18,5 / 22,5 / 32,5 / 42,5 / 52,5 / 62,5 / 82,5	6

Order No.	Surface finish	D	D1	L	SW
07119-104X	bolt delrin	M4	2	7 / 9 / 11 / 13 / 17 / 31 / 41	2
07119-105X	bolt delrin	M5	3	9 / 11 / 13 / 17 / 21 / 31 / 41	2,5
07119-106X	bolt delrin	M6	3,5	11,3 / 13,3 / 17,3 / 21,3 / 26,3 / 41,3 / 51,3 / 61,3	3
07119-108X	bolt delrin	M8	5	13,6 / 17,6 / 21,6 / 26,6 / 33,6 / 51,6 / 61,6 / 81,6	4
07119-110X	bolt delrin	M10	6,5	17,9 / 21,9 / 26,9 / 33,9 / 41,9 / 51,9 / 61,9 / 81,9	5
07119-112X	bolt delrin	M12	8	22,1 / 27,1 / 34,1 / 42,1 / 52,1 / 62,1 / 82,1	6

Grub Screws

with thrust point to DIN 6332



Material:
Steel

Surface finish:
Grub screw case-hardened, black

Sample order:
nlm 07120-12X60
(please also indicate dimension L1)

Note:
The thrust journal of the Grub Screws to DIN 6332 is designed for direct clamping as well as for use in conjunction with a Thrust Pad 07140.

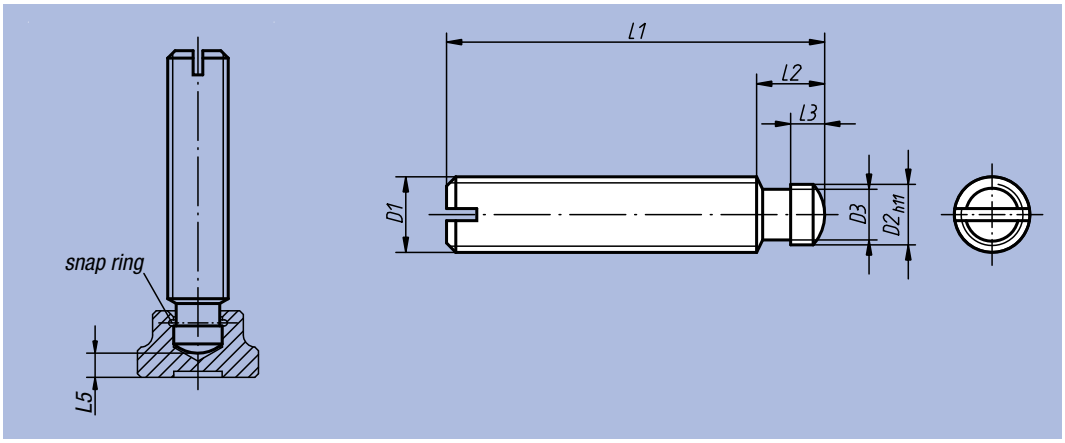

Order No.	D1	L1	D2	D3	L2	L3	L5
07120-06X	M6	30 / 35 / 40 / 50	4,5	4	6	2,5	2,2
07120-08X	M8	35 / 40 / 45 / 50 / 60	6	5,4	7,5	3	3
07120-10X	M10	50 / 55 / 60 / 65 / 80	8	7,2	9	4,5	3,6
07120-12X	M12	60 / 65 / 70 / 80 / 100	8	7,2	10	4,5	4,5
07120-14X	M14	60 / 80 / 100	10	9	12	5	5
07120-16X	M16	65 / 70 / 80 / 100 / 125	12	11	12	5	5,3
07120-20X	M20	80 / 90 / 100 / 125 / 150	15,5	14,4	14	5,5	5,6

Grub Screws

with ball thrust point



Material, surface finish:
Quality class 5.8, black oxide finish

Sample order:
nlm 07121-06X50
(Länge L1 mit angeben)

Note:
The Grub Screws are used in conjunction with a Thrust Pad 07142.

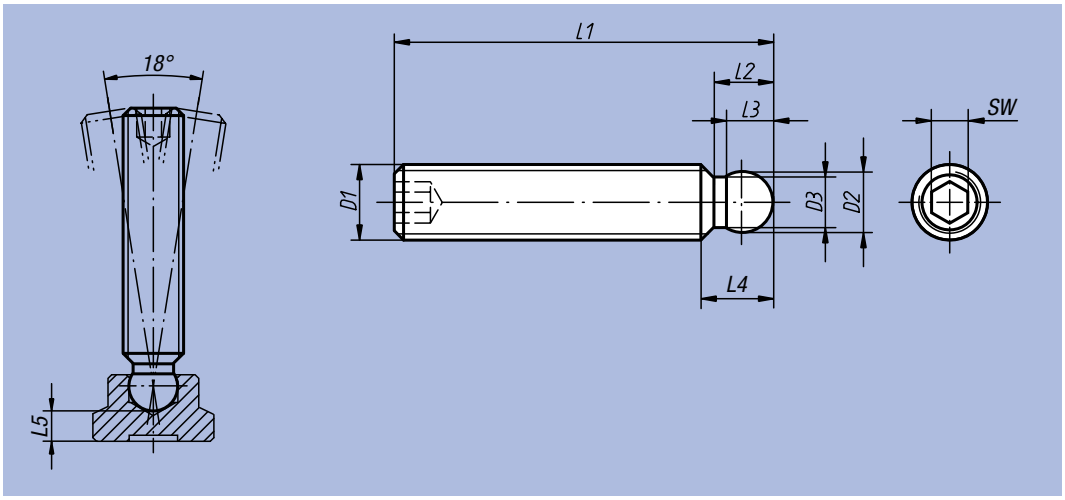

Order No.	D1	L1	D2	D3	L2	L3	L4	L5	SW
07121-06X	M6	30 / 35 / 40 / 50	4,5	3,5	4,3	3,7	5,5	3,8	3
07121-08X	M8	35 / 40 / 45 / 50 / 60	6	4,8	5,8	4,8	7,4	4,4	4
07121-10X	M10	50 / 55 / 60 / 65 / 80	8	6,5	7,3	6,3	9	5	5
07121-12X	M12	60 / 65 / 70 / 80	8	6,6	7,1	6,3	9,8	6,9	6

Torque Knurled Knobs



Material, surface finish:
Anthracite grey thermoplastic, threaded bolt and bush in steel 5.8, bush black oxide finish, threaded bolt blue chromated

Sample order:
nlm 07125-2056X30
(knob cap colour traffic red;
please also indicate dimension L)

Note:
The adjusting screw set the torque required. When the set torque is reached the knurled knob spins freely.

Δ Add the desired knob cap colour here; no colour code is required with anthracite grey knob caps.

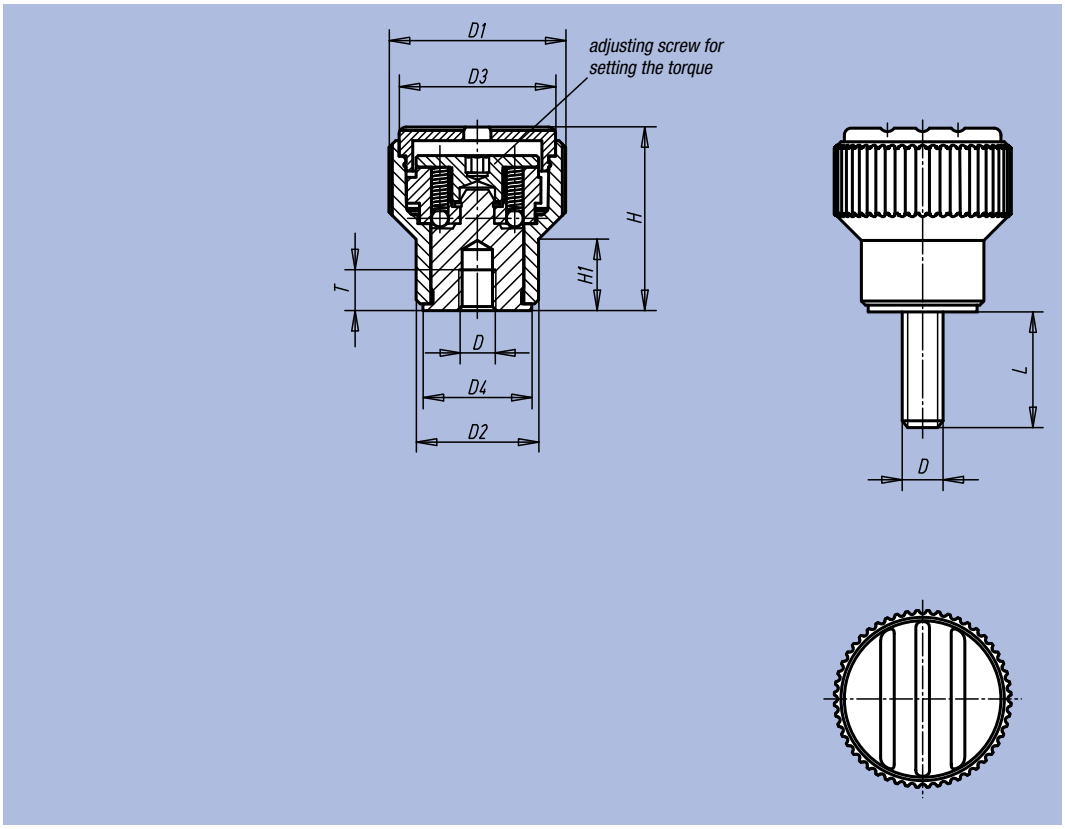

anthracite grey	light grey Δ = 5	traffic red Δ = 6	bright yellow Δ = 7
RAL 7021	RAL 7035	RAL 3020	RAL 1021

Order No.	Surface finish	Size	D	D1	D2	D3	D4	H	H1	T	Adjustable torque approx. Nm min. - max.	☐ kg
07125-205Δ	bush in steel	2	M5	26	18	23	16	27	10,5	5	0,1 - 0,3	0,047
07125-206Δ	bush in steel	2	M6	26	18	23	16	27	10,5	6	0,1 - 0,3	0,042
07125-306Δ	bush in steel	3	M6	34	22	31	20	37,5	14,5	10	0,1 - 0,3	0,082
07125-308Δ	bush in steel	3	M8	34	22	31	20	37,5	14,5	14	0,1 - 0,3	0,077

Order No.	Surface finish	Size	D	D1	D2	D3	D4	H	H1	L = screw length	Adjustable torque approx. Nm min. - max.
07125-205ΔX	bolt in steel	2	M5	26	18	23	16	27	10,5	30 / 50	0,1 - 0,3
07125-206ΔX	bolt in steel	2	M6	26	18	23	16	27	10,5	30 / 50	0,1 - 0,3
07125-306ΔX	bolt in steel	3	M6	34	22	31	20	37,5	14,5	40 / 60	0,1 - 0,3
07125-308ΔX	bolt in steel	3	M8	34	22	31	20	37,5	14,5	40 / 60	0,1 - 0,3

Torque bolts

with grub screws



Material:
Free-cutting steel

Surface finish:
Black oxide finish

Sample order:
nlm 07130-08X60
(Please also indicate dimension L)

Note:
The torque required for the knurled bolt is generated by two spring-mounted ball thrust components. As soon as the adjustable final pressure is reached, the knurled handle runs free.
The final pressure is set using the grub screws located in the head.

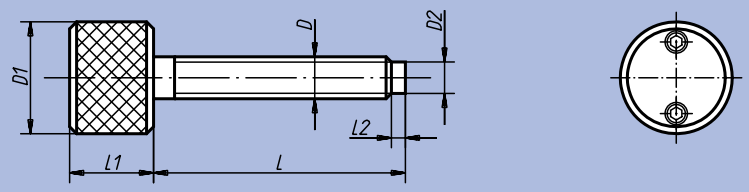

final force adjustable up to 250 N max.

Order No.	D	D1	D2	L	L1	L2
07130-06X	M6	25	4,7	40 / 60	20	3
07130-08X	M8	25	6,5	40 / 60 / 80	20	3
07130-10X	M10	25	8,2	40 / 60 / 80	20	3
07130-12X	M12	25	10	40 / 60 / 80 / 100	20	3

Torque bolts

with slot coupling



Material:
Free-cutting steel

Surface finish:
Black oxide finish

Sample order:
nlm 07131-06

Note:
The torque required for the knurled bolt is generated by two spring-mounted ball thrust components. As soon as the adjustable final pressure is reached, the knurled handle runs free.
The final pressure is set using the grub screws located in the head.

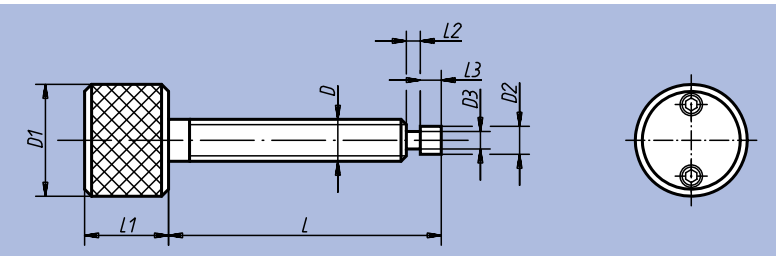

final force adjustable up to 250 N max.

Order No.	D	D1	D2	D3	L	L1	L2	L3	g
07131-06	M6	25	4,7	2,5	45	20	8	5	70
07131-10	M10	25	7,7	4,5	45	20	8	5	85

Torque bolts

with support frame



Material:
Free-cutting steel

Surface finish:
Black oxide finish

Sample order:
nlm 07132-06

Note:
The torque required for the knurled bolt is generated by two spring-mounted ball thrust components.
As soon as the adjustable final pressure is reached, the knurled handle runs free.
The final pressure is set using the grub screws located in the head.

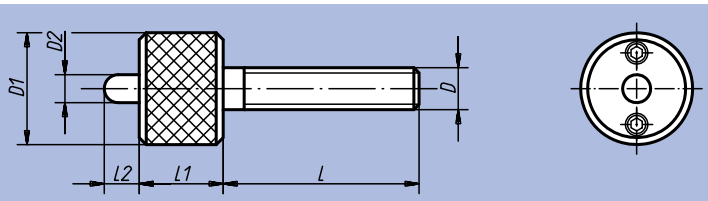

final force adjustable up to 250 N max.

Order No.	D	D1	D2	L	L1	L2	g
07132-06	M6	25	6	45	20	8	75
07132-10	M10	25	6	45	20	8	90
07132-12	M12	25	6	45	20	8	105

Torque grips

Material:
Nut: free cutting steel,
handle: grey cast GJL 250

Surface finish:
Black oxide finish

Sample order:
nlm 07133-08

Note:
The torque required for the grip is generated by two spring-mounted ball thrust components.
As soon as the adjustable final pressure is reached, the knurled handle runs free.
The final pressure is set using the grub screws located in the head.

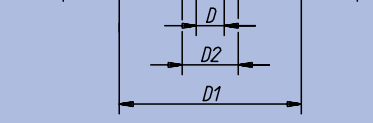

final force adjustable up to 250 N max.

Order No.	D	D1	D2	L	L1	L2	L3	g
07133-08	M8	60	20	12	22	13	40	340
07133-10	M10	60	20	12	22	13	40	335
07133-12	M12	60	20	12	22	13	40	335

Torque bolts

with ball grub screws



Material:
Free-cutting steel

Surface finish:
Black oxide finish

Sample order:
nlm 07134-08X60
(Please also indicate dimension L)

Note:
The torque required for the knurled bolt is generated by two spring-mounted ball thrust components.
As soon as the adjustable final pressure is reached, the knurled handle runs free.
The final pressure is set using the grub screws located in the head.
In conjunction with a washer (07138, 07140 or 07141) the torque bolt with ball thrust pins is particularly suited to clamping sloping surfaces.

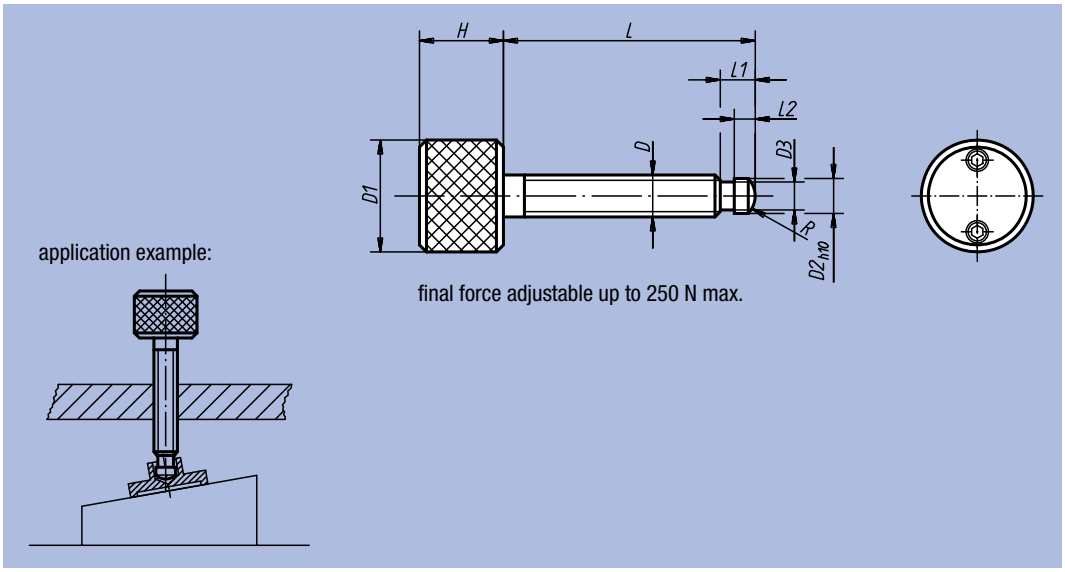

Order No.	D	D1	D2	D3	H	L	L1	L2	R
07134-06X	M6	25	4,5	4,1	20	40 / 60	6	2,5	3
07134-08X	M8	25	6	5,3	20	60 / 80	7,5	3	5
07134-10X	M10	25	8	7,2	20	60 / 80	9	4,5	6
07134-12X	M12	25	8	7,2	20	80 / 100	10	4,5	6

Thrust washer



Material:
Thrust washer: free cutting steel,
retaining ring: spring steel

Surface finish:
Surface-hardened and black oxide finish

Sample order:
nlm 07138-10

Note:
The thrust washer can be pushed onto the torque bolt with ball thrust pins (07134) or the grub screws with pressure pins (07120) using light pressure.
The thrust washer adapst to the surface to be clamped due to the ball joint.

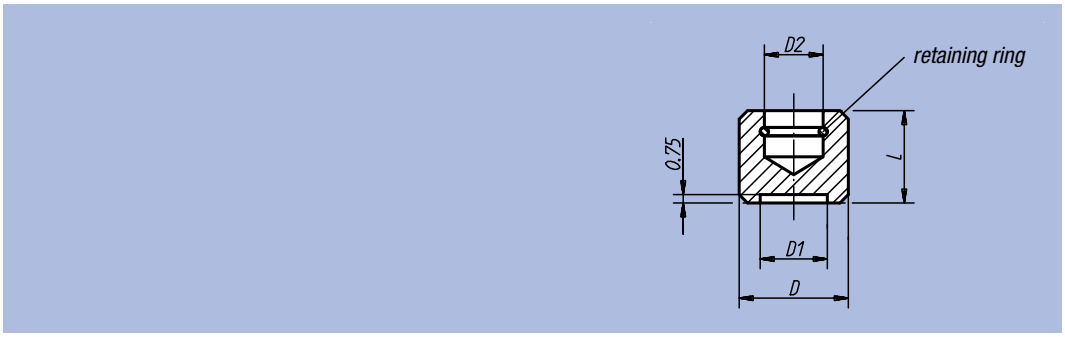

Order No.	D	D1	D2	L	Suitable for	g
07138-10	10	5	4,5	8	07120-06, 07134-06	4
07138-12	12	6	6	9	07120-08, 07134-08	8
07138-14	14	8	8	11	07120-10, 07120-12, 07134-10, 07134-12	10

Thrust Pads

to DIN 6311 extended



Material:
Steel case-hardened, snap ring in spring steel

Surface finish:
Black oxide finish

Sample order:
nlm 07140-12

Note:
When fitting the Thrust Pad, ensure that it is inclined as far as possible in the direction of the snap ring opening. The snap ring is supplied assembled.

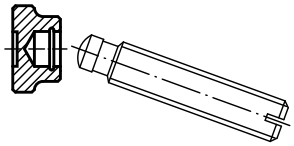

Form S
thrust pad with snap ring

Form T
low design, large clamping surface with snap ring

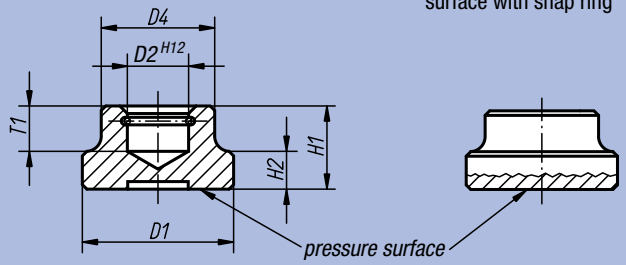

Order No.	Form	D1	D2	D4	H1	H2	T1	For grub screws with trust point DIN 6332	▫ g
07140-06	S	12	4,6	10	7	2,5	4	M6	4,4
07140-08	S	16	6,1	12	9	4	5	M8	9
07140-10	S	20	8,1	15	11	5	6	M10	17
07140-12	S	25	8,1	18	13	6	7	M12	33
07140-16	S	32	12,1	22	15	7	7,5	M16	57
07140-20	S	40	15,6	28	16	9	8	M20	103
07140-108	T	25	6,1	12	8	4	4,5	M8	17
07140-110	T	32	8,1	18	10	6	6	M10 / M12	42
07140-116	T	40	12,1	22	12	7	7	M16	75

Thrust Pads

with pin fixing

Material:
Free-cutting steel

Surface finish:
Case-hardened and black oxide finish

Sample order:
nlm 07141-10

Note:
The pin is used to hold the pad on screw 07120.

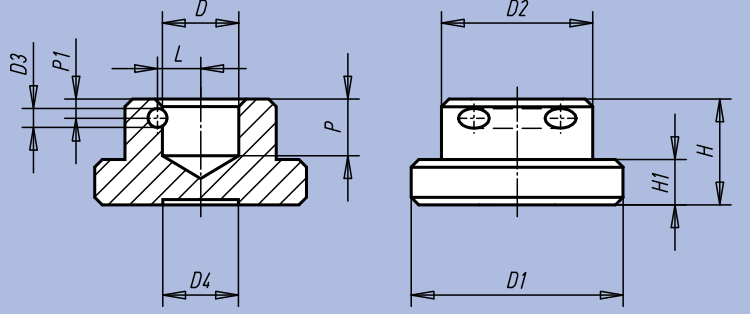

Order No.	D	D1	D2	D3	D4	H	H1	L	P	P1	▫ g
07141-06	4,6	12	10	2	5	7	2,5	2,8	4	1,8	5
07141-08	6,1	16	12	2	7	9	4	3,5	5	2	9
07141-10	8,1	20	15	2	8	11	5	4,6	7	2,7	17
07141-12	8,1	25	18	2	10	13	6	4,6	7	2,7	33
07141-14	10,1	28	20	2,5	10	14	6	5,7	7,5	2,5	37
07141-16	12,1	32	22	2,5	14	15	7	6,7	7,5	2,5	57
07141-20	15,6	40	28	2,5	18	16	9	8,3	8	3	103

Thrust Pads



Material, surface finish:
Steel, black oxide finish; black thermoplastic PA 6

Sample order:
nlm 07142-08

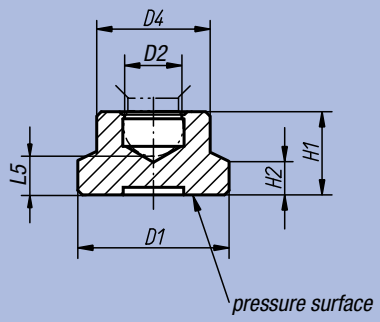

Order No.	Material	D1	D2	D4	H1	H2	L5	Suitable for Grub Screws 07121
07142-06	steel	15	4,4	8,6	7,6	2,5	3,8	M6
07142-08	steel	18	5,9	12	9	3,5	4,4	M8
07142-10	steel	21	7,9	15	11	4	5	M10
07142-12	steel	25	7,9	18	13	5	6,9	M12
07142-206	plastic	15	4,4	8,6	7,6	2,5	3,8	M6
07142-208	plastic	18	5,9	12	9	3,5	4,4	M8
07142-210	plastic	21	7,9	15	11	4	5	M10
07142-212	plastic	25	7,9	18	13	5	6,9	M12

Notes:

Pressure spindles



Material, surface finish:
Star grip: black thermoplastic, bush in galvanized steel and blue chromated; grub screw: steel quality class 5.8, black oxide finish;
pressure button: black thermoplastic PA 6

Sample order:
nlm 07143-06053

Note:
The pressure button is supplied loosely. To connect with the threaded bolt simply press it in.

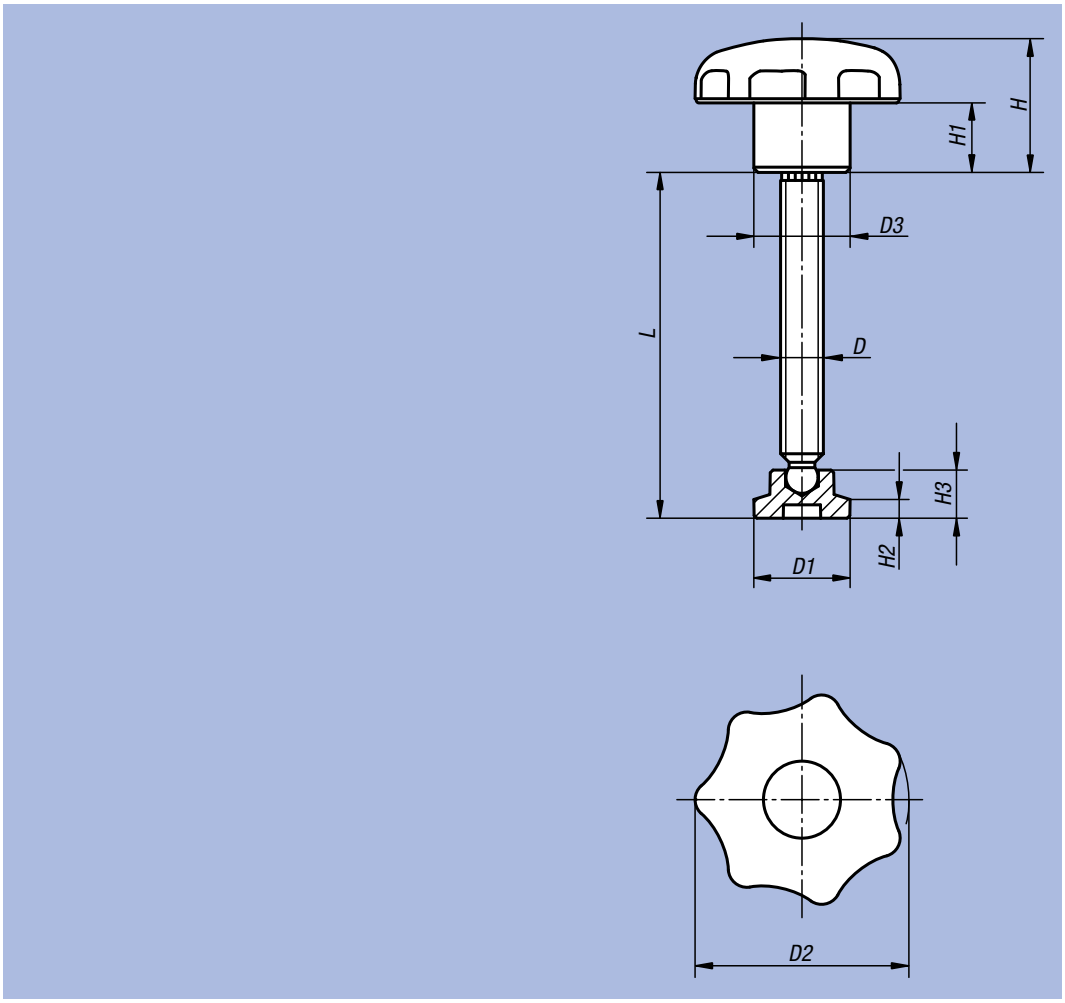

Order No.	D	D1	D2	D3	L	H	H1	H2	H3
07143-06053	M6	15	32	14	53,8	20	10	2,5	7,6
07143-08064	M8	18	40	18	64,6	25	13	3,5	9
07143-10070	M10	21	50	22	70,1	32	17	4	11
07143-12086	M12	25	63	26	86	40	21	5	13

Swivel Feet



Material, surface finish:
Form A, G: pressure foot in tempered steel, ball element in case-hardened free-cutting steel; black oxide finish
Form B: stainless steel, natural finish
Form C: pressure foot in white delrin; ball element in case-hardened free-cutting steel, black oxide finish
Form D: pressure foot in white delrin; ball element in stainless steel, natural finish

anti-slip-plate in thermoplastic elastomer

Sample order:
nlm 07144-112

Note:
The Anti-Slip-Plate absorbs vibrations and prevents slipping of the Swivel Foot.

Form A
pressure foot and
ball element in steel

Form B
pressure foot and
ball element in stainless steel

Form C
pressure foot in delrin,
ball element in steel

Form D
pressure foot in delrin,
ball element in stainless steel

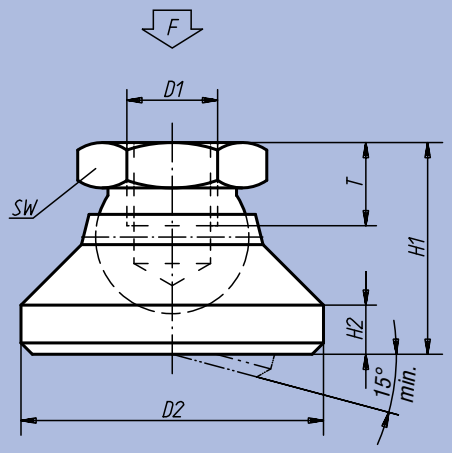

Form G
pressure foot and
ball element in steel
with anti-slip-plate

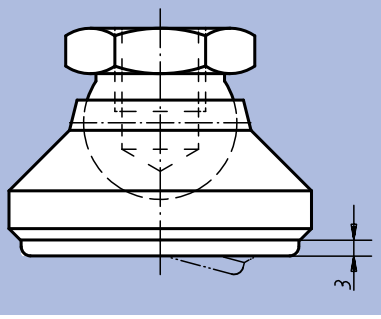

Order No. Form A	Order No. Form B	D1	D2	H1	H2	T	SW	Load capacity max. kN (static load only)
07144-106	07144-306	M6	20	15	2,5	8,5	10	10
07144-108	07144-308	M8	25	18	4	9	13	18
07144-110	07144-310	M10	32	22	5	10	17	20
07144-112	07144-312	M12	40	26	6	12	19	35
07144-116	07144-316	M16	50	32	7	14	24	45
07144-120	07144-320	M20	60	42	8	18	30	55

Order No. Form C	Order No. Form D	D1	D2	H1	H2	T	SW	Load capacity max. kN (static load only)
07144-506	07144-206	M6	20	15	2,5	8,5	10	4
07144-508	07144-208	M8	25	18	4	9	13	7
07144-510	07144-210	M10	32	22	5	10	17	10
07144-512	07144-212	M12	40	26	6	12	19	18
07144-516	07144-216	M16	50	32	7	14	24	20
07144-520	07144-220	M20	60	42	8	18	30	22

Order No. Form G	D1	D2	H1	H2	T	SW	Load capacity max. kN (static load only)
07144-410	M10	32	22	5	10	17	12
07144-412	M12	40	26	6	12	19	17
07144-416	M16	50	32	7	14	24	20
07144-420	M20	60	42	8	18	30	24

Socket Head Screws

DIN 912 / DIN EN ISO 4762



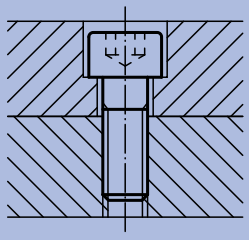

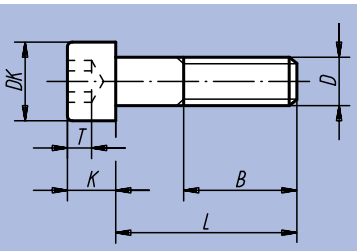

Material:
Steel or stainless steel (A 2)

Surface finish:
Steel class 8.8, black;
sstainless steel A 2-70, natural finish

Sample order:
nlm 07160-08X40
(Please also indicate dimension L)

Note:
The screw length 18 as well as the versions 07160-105X40 and 07160-106X55 are not available in stainless steel.

Order No. Material steel	Order No. Material stainless steel	D	L	B	DK	K	E	SW	T
07160-04X	07160-104X	M4	10 / 12 / 16 / 18 / 20 / 25	20	7	4	3,44	3	2
07160-05X	07160-105X	M5	10 / 12 / 16 / 18 / 20 / 25 / 30 / 40	22	8,5	5	4,58	4	2,5
07160-06X	07160-106X	M6	10 / 12 / 16 / 18 / 20 / 25 / 30 / 35 / 40 / 45 / 50 / 55 / 60	24	10	6	5,72	5	3
07160-08X	07160-108X	M8	16 / 18 / 20 / 25 / 30 / 35 / 40 / 45 / 50 / 60 / 70 / 80	28	13	8	6,86	6	4
07160-10X	07160-110X	M10	16 / 18 / 20 / 25 / 30 / 35 / 40 / 45 / 50 / 60 / 70 / 80 / 90 / 100	32	16	10	9,15	8	5
07160-12X	07160-112X	M12	20 / 25 / 30 / 35 / 40 / 45 / 50 / 60 / 70 / 80 / 90 / 100 / 110 / 120	36	18	12	11,43	10	6
07160-14X	-	M14	50 / 80 / 120	40	21	14	13,9	12	7
07160-16X	-	M16	30 / 35 / 40 / 45 / 50 / 60 / 70 / 80 / 90 / 100 / 110 / 120	44	24	16	16	14	8
07160-20X	-	M20	40 / 45 / 50 / 60 / 70 / 80 / 90 / 100 / 110 / 120	52	30	20	19,44	17	10

nlm 07160

Socket Head Screws

DIN 912 / DIN EN ISO 4762



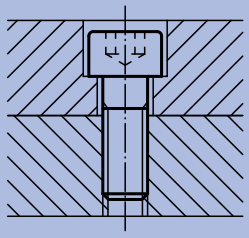

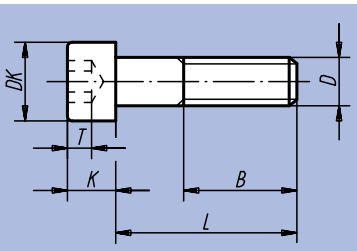

Material:
Steel

Surface finish:
Steel class 12.9, black

Sample order:
nlm 07160-206X40
(Please also indicate dimension L)

Order No.	D	L	B	DK	K	E	SW	T
07160-206X	M6	18 / 20 / 25 / 30 / 35 / 40 / 45 / 50 / 55 / 60 / 65 / 70 / 80 / 90 / 100	24	10	6	5,72	5	3
07160-210X	M10	30 / 35 / 40 / 45 / 50 / 55 / 60 / 65 / 70 / 75 / 80 / 90 / 100 / 110 / 120 / 130 / 140	32	16	10	9,15	8	5
07160-216X	M16	35 / 40 / 45 / 50 / 55 / 60 / 65 / 70 / 75 / 80 / 90 / 100 / 110 / 120 / 130 / 140 / 150 / 160 / 170 / 180 / 200	44	24	16	16	14	8

Socket Head Screws with low head

DIN 6912



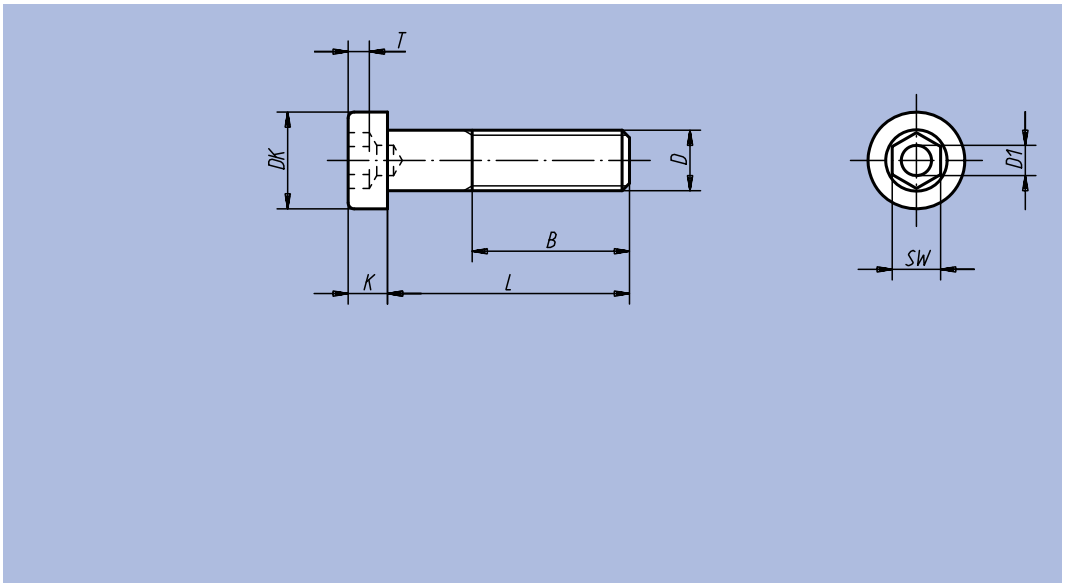

Material:
Steel or stainless steel (A 2)

Surface finish:
Steel class 8.8, black;
stainless steel A 2-70, natural finish

Sample order:
nlm 07161-110X20
(Please also indicate dimension L)

Order No.	Material	D	L	B	DK	K	D1	SW	T
07161-04X	steel	M4	10 / 12 / 16 / 20 / 25	14	7	2,8	2	3	1,48
07161-05X	steel	M5	10 / 12 / 16 / 20 / 25 / 30	16	8,5	3,5	2,5	4	1,88
07161-06X	steel	M6	10 / 12 / 16 / 20 / 25 / 30 / 35 / 40 / 45 / 50 / 60	18	10	4	3	5	2,38
07161-08X	steel	M8	10 / 12 / 16 / 20 / 25 / 30 / 35 / 40 / 45 / 50 / 60 / 70 / 80	22	13	5	4	6	2,88
07161-10X	steel	M10	12 / 16 / 20 / 25 / 30 / 35 / 40 / 45 / 50 / 60 / 70 / 80 / 90 / 100	26	16	6,5	5	8	3,35
07161-12X	steel	M12	20 / 25 / 30 / 35 / 40 / 45 / 50 / 60 / 70 / 80 / 90 / 100 / 110 / 120	30	18	7,5	6	10	3,85
07161-16X	steel	M16	30 / 35 / 40 / 45 / 50 / 60 / 70 / 80 / 90 / 100 / 110 / 120	38	24	10	8	14	5,35
07161-20X	steel	M20	40 / 45 / 50 / 60 / 70 / 80 / 90 / 100 / 110 / 120	46	30	12	10	17	6,32
07161-104X	stainless steel	M4	10 / 12 / 16 / 20 / 25	14	7	2,8	2	3	1,48
07161-105X	stainless steel	M5	10 / 12 / 16 / 20 / 25 / 30	16	8,5	3,5	2,5	4	1,88
07161-106X	stainless steel	M6	10 / 12 / 16 / 20 / 25 / 30 / 35 / 40 / 45 / 50 / 60	18	10	4	3	5	2,38
07161-108X	stainless steel	M8	10 / 12 / 16 / 20 / 25 / 30 / 35 / 40 / 45 / 50 / 60 / 70	22	13	5	4	6	2,88
07161-110X	stainless steel	M10	16 / 20 / 25 / 30 / 35 / 40 / 45 / 50 / 60 / 70	26	16	6,5	5	8	3,35
07161-112X	stainless steel	M12	20 / 25 / 30 / 35 / 40 / 45 / 50 / 60 / 70	30	18	7,5	6	10	3,85

Hexagon Socket Set Screws with flat tip

DIN 913



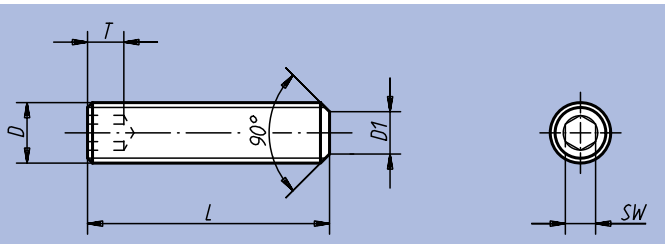

Material:
Steel or stainless steel (A 2)

LONG-LOK thread lock in nylon

Surface finish:
Steel class 45 H, black;
stainless steel A 2-70, natural finish

Sample order:
nlm 07165-110X20
(Please also indicate dimension L)

Note:
Steel model partially fitted with LONG-LOK thread lock.

Order No.	Material	D	L	D1	T	SW
07165-03X	steel	M3	5 / 6 / 8 / 10 / 12 / 16 / 20	2	1,2	1,5
07165-04X	steel	M4	5 / 6 / 8 / 10 / 12 / 16 / 20 / 25	2,5	1,5	2
07165-05X	steel	M5	5 / 6 / 8 / 10 / 12 / 16 / 20 / 25 / 30	3,5	2	2,5
07165-06X	steel	M6	6 / 8 / 10 / 12 / 16 / 20 / 25 / 30 / 35 / 40 / 45 / 50 / 60	4	2	3
07165-08X	steel	M8	8 / 10 / 12 / 16 / 20 / 25 / 30 / 35 / 40 / 45 / 50 / 60 / 70 / 80	5,5	3	4
07165-10X	steel	M10	10 / 12 / 16 / 20 / 25 / 30 / 35 / 40 / 45 / 50 / 60 / 70 / 80 / 90 / 100	7	6	5
07165-103X	stainless steel	M3	5 / 6 / 8 / 10 / 12	2	1,2	1,5
07165-104X	stainless steel	M4	5 / 6 / 8 / 10 / 12 / 16 / 20	2,5	1,5	2
07165-105X	stainless steel	M5	5 / 6 / 8 / 10 / 12 / 16 / 20 / 25 / 30	3,5	2	2,5
07165-106X	stainless steel	M6	6 / 8 / 10 / 12 / 16 / 20 / 25 / 30 / 35 / 40	4	2	3
07165-108X	stainless steel	M8	8 / 10 / 12 / 16 / 20 / 25 / 30 / 35 / 40 / 45 / 50	5,5	3	4
07165-110X	stainless steel	M10	10 / 12 / 16 / 20 / 25 / 30 / 35 / 40 / 45 / 50	7	6	5
07165-203X	steel LONG-LOK	M3	5 / 10	2	1,2	1,5
07165-204X	steel LONG-LOK	M4	6 / 10	2,5	1,5	2
07165-205X	steel LONG-LOK	M5	6 / 12	3,5	2	2,5
07165-206X	steel LONG-LOK	M6	8 / 12	4	2	3
07165-208X	steel LONG-LOK	M8	8 / 16	5,5	3	4
07165-210X	steel LONG-LOK	M10	10 / 20	7	6	5

Hexagon Socket Set Screws with pointed tip

DIN 914



Material:
Steel or stainless steel (A 2)

Surface finish:
Steel class 45 H, black;
stainless steel A 2-70, natural finish

Sample order:
nlm 07166-110X12
(Please also indicate dimension L)

Note:
The screw lengths 14, 70 and 80 are not available in stainless steel.

application example:

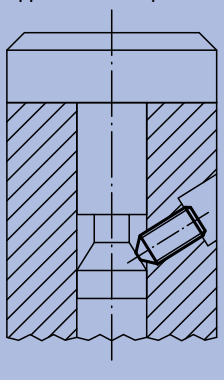

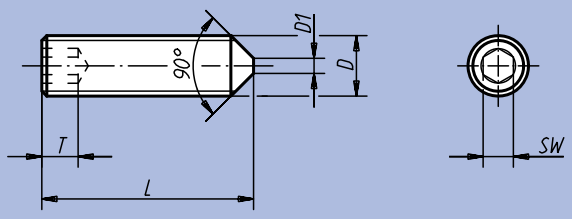

Order No. Material steel	Order No. Material stainless steel	D	L	D1	T	SW
07166-03X	07166-103X	M3	5 / 6 / 8 / 10 / 12 / 16 / 20	-	1,2	1,5
07166-04X	07166-104X	M4	5 / 6 / 8 / 10 / 12 / 16 / 20 / 25	-	1,5	2
07166-05X	07166-105X	M5	5 / 6 / 8 / 10 / 12 / 14 / 16 / 20 / 25 / 30	-	2	2,5
07166-06X	07166-106X	M6	6 / 8 / 10 / 12 / 16 / 20 / 25 / 30 / 35 / 40 / 45 / 50 / 60	1,5	2	3
07166-08X	07166-108X	M8	8 / 10 / 12 / 14 / 16 / 20 / 25 / 30 / 35 / 40 / 45 / 50 / 60	2	3	4
07166-10X	07166-110X	M10	10 / 12 / 16 / 20 / 25 / 30 / 35 / 40 / 45 / 50 / 60 / 70 / 80	2,5	4	5

Hexagon Head Bolts with shank

DIN 931 / DIN EN ISO 4014 / DIN EN ISO 24014



Material:
Steel or stainless steel (A 2)

Surface finish:
Steel class 8.8, black;
stainless steel A 2-70, natural finish

Sample order:
nlm 07170-110X50
(Please also indicate dimension L)

Note:
The versions 07170-105X25 and 07170-105X45 are not available in stainless steel.

On request:
Wrench sizes to DIN ISO 272.

application example:

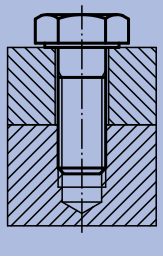

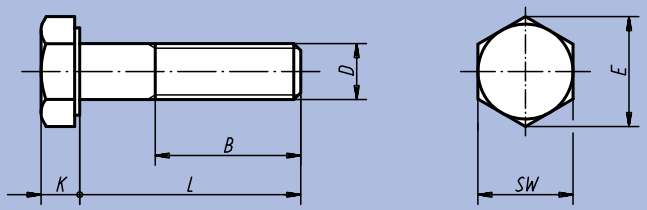

Order No. Material steel	Order No. Material stainless steel	D	L	B	SW	E	K
07170-04X	-	M4	25 / 30 / 35 / 40 / 45 / 50	14	7	7,66	2,8
07170-05X	07170-105X	M5	25 / 30 / 35 / 40 / 45 / 50 / 60	16	8	8,79	3,5
07170-06X	07170-106X	M6	30 / 35 / 40 / 45 / 50 / 60 / 70	18	10	11,05	4
07170-08X	07170-108X	M8	35 / 40 / 45 / 50 / 60 / 70 / 80	22	13	14,38	5,3
07170-10X	07170-110X	M10	40 / 45 / 50 / 60 / 70 / 80 / 90 / 100	26	17	18,9	6,4
07170-12X	07170-112X	M12	45 / 50 / 60 / 70 / 80 / 90 / 100 / 110 / 120	30	19	21,1	7,5
07170-16X	07170-116X	M16	60 / 70 / 80 / 90 / 100 / 110 / 120	38	24	26,75	10
07170-20X	-	M20	70 / 80 / 90 / 100 / 110 / 120	46	30	33,53	12,5

Hexagon Socket Countersunk Head Screws

DIN 7991



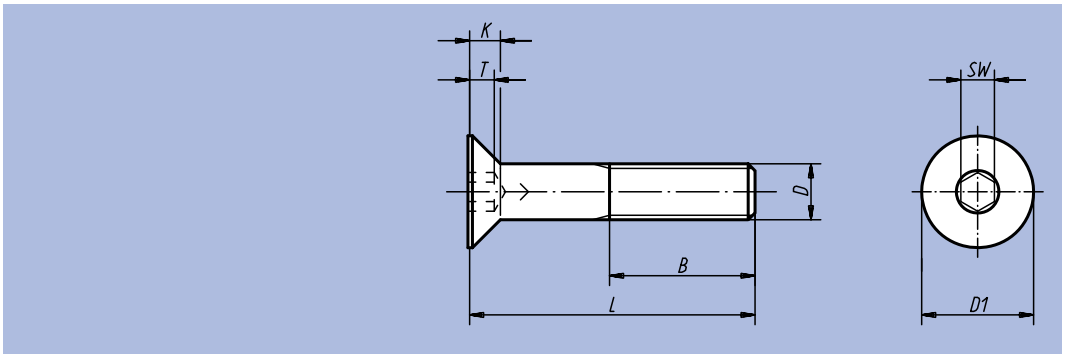

Material:
Steel or stainless steel (A 2)

Surface finish:
Steel class 8.8, black;
stainless steel A 2-70, natural finish

Sample order:
nlm 07175-106X20
(Please also indicate dimension L)

Order No. Material steel	Order No. Material stainless steel	D	L	K	T	B	D1	SW
07175-04X	07175-104X	M4	10 / 12 / 16 / 20 / 25	2,3	1,8	14	8	2,5
07175-05X	07175-105X	M5	10 / 12 / 16 / 20 / 25 / 30	2,8	2,3	16	10	3
07175-06X	07175-106X	M6	10 / 12 / 16 / 20 / 25 / 30 / 35 / 40 / 45 / 50 / 60	3,3	2,5	18	12	4
07175-08X	07175-108X	M8	16 / 20 / 25 / 30 / 35 / 40 / 45 / 50 / 60	4,4	3,5	22	16	5
07175-10X	07175-110X	M10	16 / 20 / 25 / 30 / 35 / 40 / 45 / 50 / 60 / 70	5,5	4,4	26	20	6
07175-12X	07175-112X	M12	20 / 25 / 30 / 35 / 40 / 45 / 50 / 60 / 70 / 80	6,5	4,6	30	24	8
07175-16X	07175-116X	M16	30 / 35 / 40 / 45 / 50 / 60 / 70 / 80	7,5	5,3	38	30	10

Notes:

Eye Bolts

to DIN 444 Form B



Material:
Steel, quality class 8.8 or stainless steel

Surface finish:
Steel black oxide finish; stainless steel natural finish

Sample order:
nlm 07180-12100

Note:
Suitable Hinge Pin, see 04250.

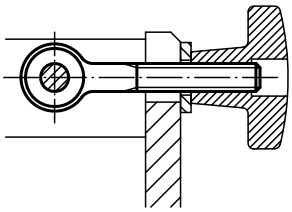

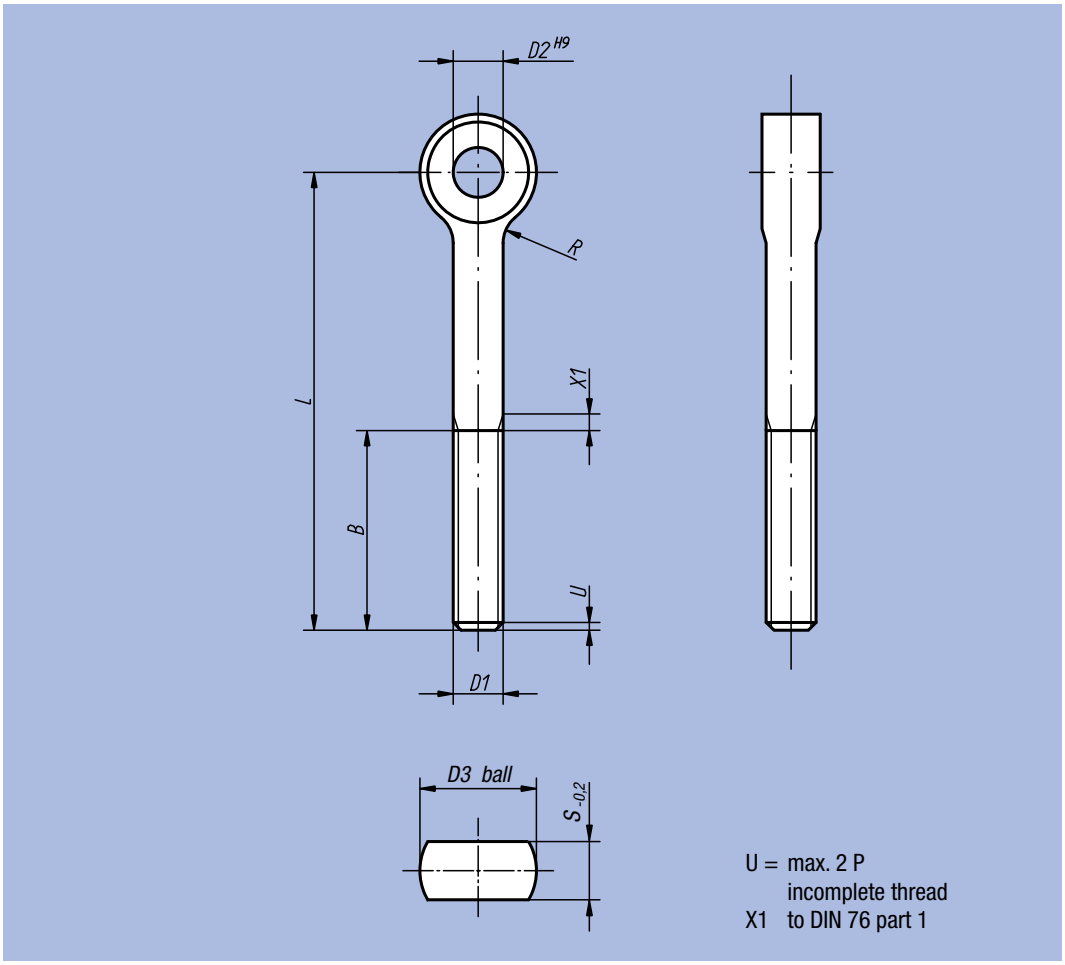

Order No. Material steel	Order No. Material stainless steel	D1	L	D2	D3	B	S	R	kg
07180-0550	07180-10550	M5	50	5	12	16	6	2,5	0,011
07180-0575	-	M5	75	5	12	16	6	2,5	0,015
07180-0650	07180-10650	M6	50	6	14	18	7	4	0,016
07180-0675	07180-10675	M6	75	6	14	18	7	4	0,021
07180-0850	07180-10850	M8	50	8	18	22	9	4	0,030
07180-0875	07180-10875	M8	75	8	18	22	9	4	0,040
07180-1075	07180-11075	M10	75	10	20	26	12	4	0,055
07180-10100	07180-110100	M10	100	10	20	26	12	4	0,070
07180-1275	07180-11275	M12	75	12	25	30	14	6	0,085
07180-12100	07180-112100	M12	100	12	25	30	14	6	0,100
07180-12120	07180-112120	M12	120	12	25	30	14	6	0,124
07180-12130	07180-112130	M12	130	12	25	36	14	6	0,135
07180-1475	07180-11475	M14	75	14	28	36	16	6	0,118
07180-14130	07180-114130	M14	130	14	28	36	16	6	0,182
07180-16130	07180-116130	M16	130	16	32	44	17	6	0,244
07180-20140	07180-120140	M20	140	18	40	52	22	6	0,433

Hexagon Nuts

DIN 934 / DIN EN ISO 4032 / DIN EN 24032



application example:

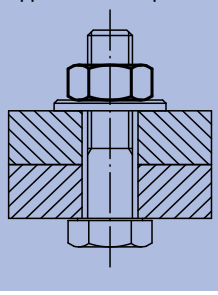

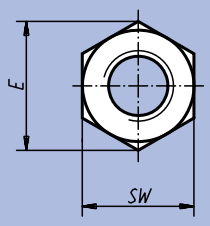

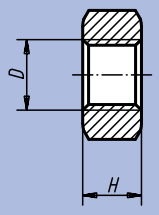

Material:
Steel or stainless steel (A 2)

Surface finish:
Steel class 8, natural finish;
stainless steel A 2-70, natural finish

Sample order:
nlm 07210-10

Note:
The quality class of a nut must always be the same or higher than the quality class of a bolt. That is, bolts in quality class 8.8 are always paired with a nut in quality class 8 (or higher, but never lower).

On request:
Wrench sizes to DIN ISO 272.

Order No. Material steel	Order No. Material stainless steel	D	H	E	SW
07210-03	07210-103	M3	2,4	6,01	5,5
07210-04	07210-104	M4	3,2	7,66	7
07210-05	07210-105	M5	4	8,79	8
07210-06	07210-106	M6	5	11,05	10
07210-08	07210-108	M8	6,5	14,38	13
07210-10	07210-110	M10	8	18,9	17
07210-12	07210-112	M12	10	21,1	19
07210-16	07210-116	M16	13	26,76	24
07210-20	07210-120	M20	16	32,95	30

Notes:

Hexagon Thin Nuts

DIN 439



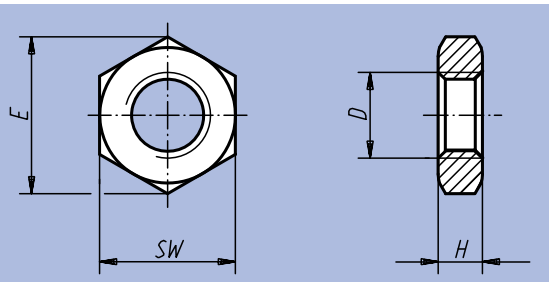

Material:
Steel or stainless steel (A 2)

Surface finish:
Steel class 04, galvanized or black oxide finish; stainless steel (A 2), natural finish

Sample order:
nlm 07212-10

Note:
This hexagon nut is used in bolted assemblies exposed to limited loads, e.g. as a counternut in forked joints or the head of an articulated joint.

Order No. Material galvanized steel	Order No. Material stainless steel	Order No. Material steel black oxide finish	Surface finish	D	H	E	SW
07212-05	07212-105	07212-205	right-hand thread	M5	2,7	8,79	8
07212-06	07212-106	07212-206	right-hand thread	M6	3,2	11,05	10
-	07212-1062	07212-2063	right-hand thread	M6x0,75	3,2	11,05	10
07212-08	07212-108	07212-208	right-hand thread	M8	4	14,38	13
-	07212-1083	07212-2083	right-hand thread	M8x1	4	14,38	13
07212-10	07212-110	07212-210	right-hand thread	M10	5	18,9	17
07212-103	07212-1103	07212-2103	right-hand thread	M10x1	5	18,9	17
07212-104	07212-1104	-	right-hand thread	M10x1,25	5	18,9	17
07212-12	07212-112	07212-212	right-hand thread	M12	6	21,1	19
07212-123	07212-1123	-	right-hand thread	M12x1,25	6	21,1	19
07212-124	07212-1124	07212-2124	right-hand thread	M12x1,5	6	21,1	19
07212-16	07212-116	07212-216	right-hand thread	M16	8	26,76	24
07212-163	07212-1163	07212-2163	right-hand thread	M16x1,5	8	26,76	24
07212-183	-	-	right-hand thread	M18x1,5	9	29,56	27
07212-203	07212-1203	07212-2203	right-hand thread	M20x1,5	10	32,95	30
07212-223	07212-1223	-	right-hand thread	M22x1,5	10	36,9	32
-	07212-1243	07212-2243	right-hand thread	M24x2	12	39,6	36
07212-061	07212-1061	-	left-hand thread	M6	3,2	11,05	10
07212-081	07212-1081	-	left-hand thread	M8	4	14,38	13
07212-101	07212-1101	-	left-hand thread	M10	5	18,9	17
07212-1031	07212-11031	-	left-hand thread	M10x1	5	18,9	17
07212-1041	07212-11041	-	left-hand thread	M10x1,25	5	18,9	17
07212-121	07212-1121	-	left-hand thread	M12	6	21,1	19
07212-1231	07212-11231	-	left-hand thread	M12x1,25	6	21,1	19
07212-1241	07212-11241	-	left-hand thread	M12x1,5	6	21,1	19
07212-161	07212-1161	-	left-hand thread	M16	8	26,76	24
07212-2031	07212-12031	-	left-hand thread	M20x1,5	10	32,95	30
07212-2231	07212-12231	-	left-hand thread	M22x1,5	10	36,9	32

Extension Nuts

height 3 D



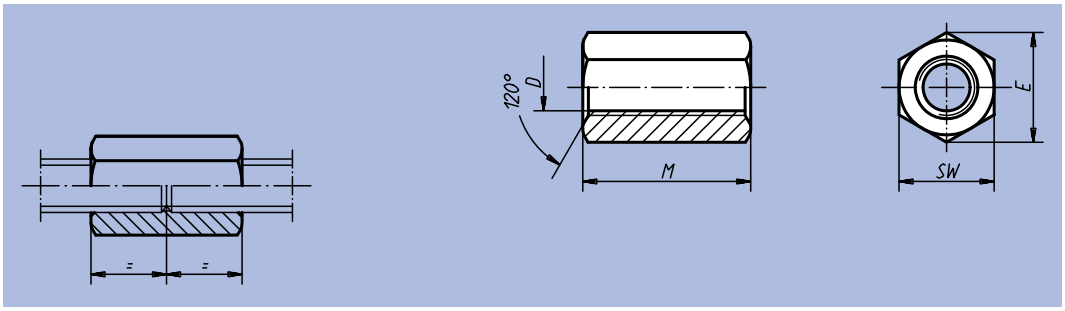

Material:
Tempered steel

Surface finish:
Heat-treated class 10, black

Sample order:
nlm 07220-16

Note:
For both functional and safety reasons, bolts from bot sides should be screwed in to a maximum of half the height of the nut. Minimum penetration depth: 1x diameter.

On request:
Wrench sizes to DIN ISO 272.

Order No.	D	M = 3 x D	SW	E	◻g
07220-06	M6	18	10	11,5	8
07220-08	M8	24	13	15	19
07220-10	M10	30	17	19,6	42
07220-12	M12	36	19	21,9	64
07220-14	M14	42	22	25,4	95
07220-16	M16	48	24	27,7	120
07220-18	M18	54	27	31,2	160
07220-20	M20	60	30	34,6	240
07220-22	M22	66	32	36,9	300
07220-24	M24	72	36	41,6	400
07220-27	M27	81	41	47,3	600
07220-30	M30	90	46	53,1	850
07220-36	M36	108	55	63,5	1470

Notes:

Hexagon Nuts with collar

height 1.5 D, to DIN 6331 extended



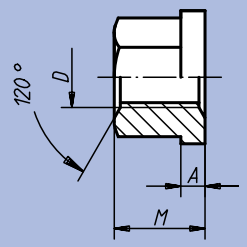

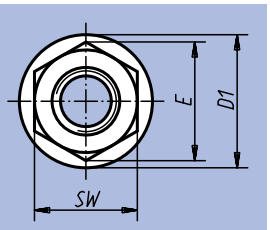

Material:
Tempered steel or stainless steel (A2)

Surface finish:
Steel class 10, black;
stainless steel A 2-70, natural finish

Sample order:
nlm 07240-16

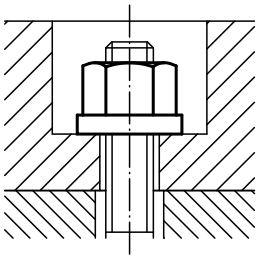

Order No.	Material	D	M = 1,5 x D	A	D1	SW	E	◻ g
07240-05	steel	M5	7,5	2	12	9	10,4	3
07240-06	steel	M6	9	3	14	10	11,5	6
07240-08	steel	M8	12	3,5	18	13	15	12
07240-10	steel	M10	15	4	22	16	18,5	22
07240-101	steel	M10	15	4	22	17	19,6	25
07240-12	steel	M12	18	4	25	18	20,8	31
07240-121	steel	M12	18	4	25	19	21,9	35
07240-14	steel	M14	21	4,5	28	22	25,4	51
07240-16	steel	M16	24	5	31	24	27,7	70
07240-18	steel	M18	27	5	34	27	31,2	95
07240-20	steel	M20	30	6	37	30	34,6	130
07240-22	steel	M22	33	6	40	34	36,9	160
07240-24	steel	M24	36	6	45	36	41,6	230
07240-30	steel	M30	45	8	58	46	53,1	470
07240-36	steel	M36	54	10	68	55	63,5	810
07240-806	stainless steel	M6	9	3	14	10	11,5	6
07240-808	stainless steel	M8	12	3,5	18	13	15	12
07240-810	stainless steel	M10	15	4	22	16	18,5	22
07240-811	stainless steel	M10	15	4	22	17	19,6	25
07240-812	stainless steel	M12	18	4	25	18	20,8	31
07240-8121	stainless steel	M12	18	4	25	19	21,9	35
07240-816	stainless steel	M16	24	5	31	24	27,7	70
07240-820	stainless steel	M20	30	6	37	30	34,6	130

Hexagonal Nut

with no-loss washer



Material:
Hexagonal nut and washer in tempered steel;
retaining ring in PA 6 black

Surface finish:
Hexagonal nut and washer tempered with black oxide finish;
hexagonal nut: quality class 10

Sample order:
nlm 07242-12

Benefits:
- A compact unit.
- The bolt is permanently attached to the hexagonal nut by a retaining ring.
- Components such as expensive special brackets, clamping disks and flanges, ect., are protected by the hexagonal nut with washer. This results in cost advantages due to less wear.
- There are other cost advantages in acquisition. One ordering process for what was previously two products.

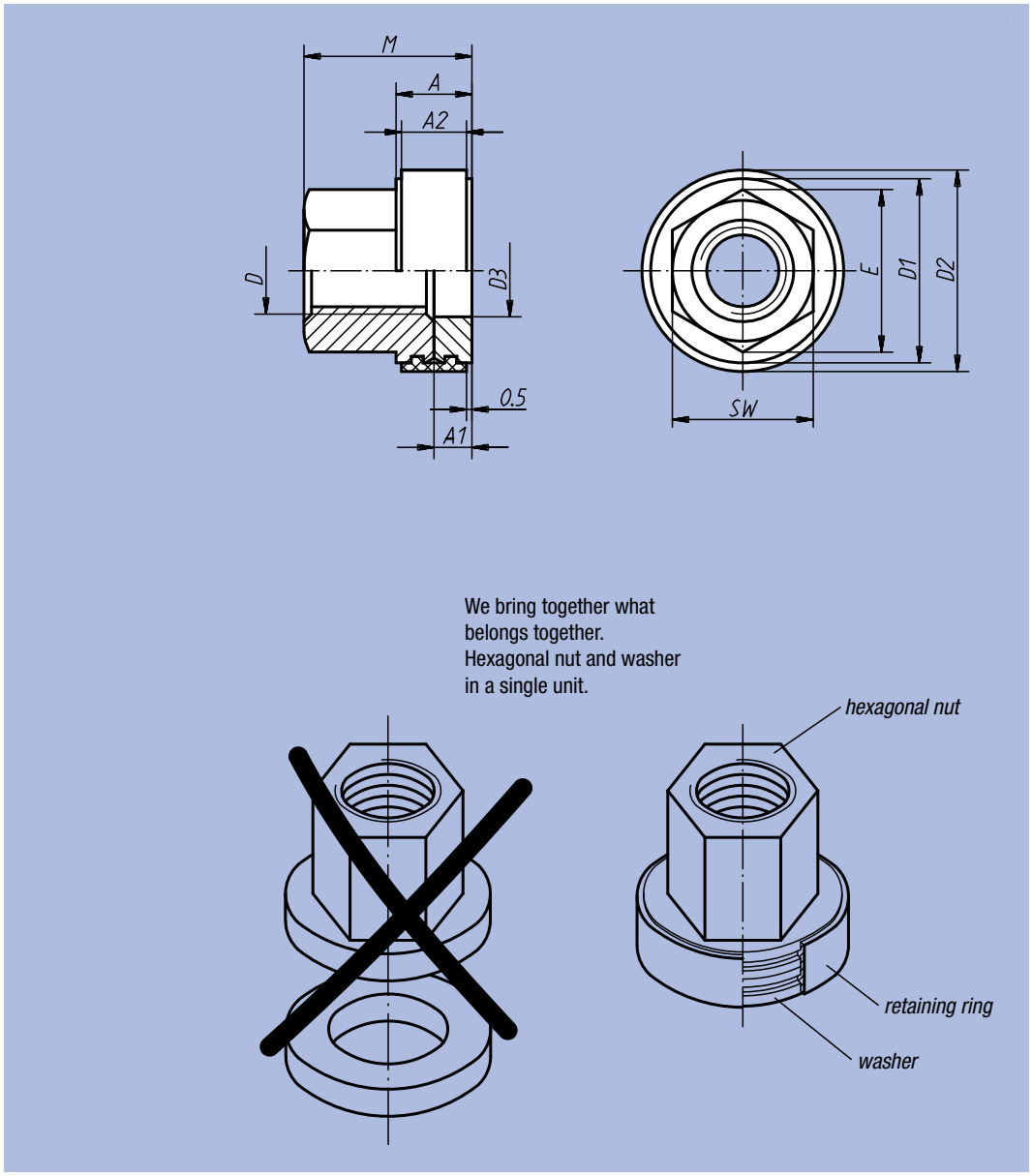

Order No.	D	M	A	A1	A2	D1	D2	D3	E	SW	g
07242-08	M8	15,5	7	3,5	6	17	18,6	8,5	15	13	15
07242-10	M10	19	8	4	7	21	22,7	10,5	18,5	16	30
07242-12	M12	22	8	4	7	24	25,7	12,5	20,8	18	42
07242-16	M16	29	10	5	9	30	32	16,5	27,7	24	85
07242-20	M20	36	12	6	11	36	38	20,5	34,6	30	158
07242-24	M24	42	12	6	11	44	46	24,5	41,6	36	276

Hexagon Nuts

height 1.5 D, to DIN 6330 extended



Material:
Tempered steel or stainless steel (A2)

Surface finish:
Heat-treated class 10, black;
stainless steel A 2-70, natural finish

Sample order:
nlm 07260-12

Note:
Hexagon Nuts can be used with
Concave Washers 07420, form D and G.

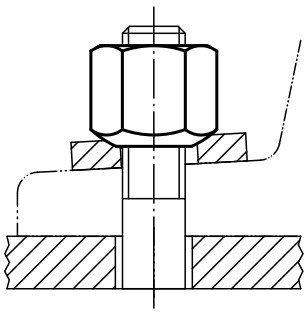

Form B
with rounded baseplate on one side

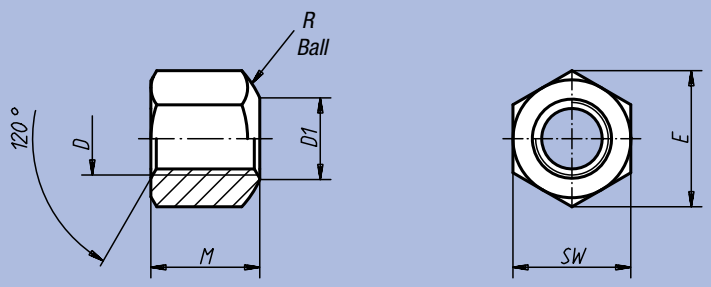

Order No.	Material	D	M = 1,5 x D	D1	SW	E	R	◻g
07260-05	steel	M5	7,5	6,5	9	10,4	7	4,0
07260-06	steel	M6	9	7	10	11,5	9	4,5
07260-08	steel	M8	12	9	13	15	11	9,0
07260-10	steel	M10	15	11,5	16	18,4	15	14,0
07260-101	steel	M10	15	11,5	17	19,6	15	20,0
07260-12	steel	M12	18	14	18	20,7	17	20,0
07260-121	steel	M12	18	14	19	21,9	17	28,0
07260-14	steel	M14	21	16	22	25,4	20	45,0
07260-16	steel	M16	24	18	24	27,7	22	58,0
07260-18	steel	M18	27	20	27	31,2	24,5	83,0
07260-20	steel	M20	30	22	30	34,6	27	110,0
07260-22	steel	M22	33	24	32	36,9	29	130,0
07260-24	steel	M24	36	26	36	41,6	32	195,0
07260-30	steel	M30	45	32	46	53,1	41	405,0
07260-36	steel	M36	54	38	55	63,5	50	715,0
07260-806	stainless steel	M6	9	7	10	11,5	9	4,5
07260-808	stainless steel	M8	12	9	13	15	11	9,0
07260-810	stainless steel	M10	15	11,5	16	18,4	15	14,0
07260-811	stainless steel	M10	15	11,5	17	19,6	15	20,0
07260-812	stainless steel	M12	18	14	18	20,7	17	20,0
07260-813	stainless steel	M12	18	14	19	21,9	17	28,0
07260-816	stainless steel	M16	24	18	24	27,7	22	58,0
07260-820	stainless steel	M20	30	22	30	34,6	27	110,0

Hexagon Domed Cap Nuts

similar to DIN 1587



Material:
Steel

Surface finish:
Steel class 8, black oxide finish

Sample order:
nlm 07280-10

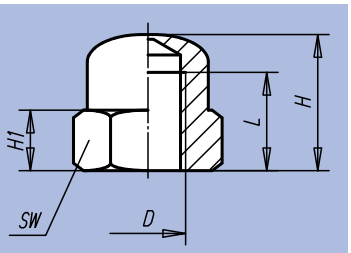

Order No.	D	H	H1	L	SW	g
07280-05	M 5	10	4	6,5	9	4
07280-06	M 6	12	5	8	10	5
07280-08	M 8	15	6,5	11	13	12
07280-10	M10	18	8	13	17	20
07280-12	M12	22	10	16	19	28
07280-14	M14	25	11	18	22	57
07280-16	M16	28	13	21	24	70
07280-20	M20	34	16	26	30	95

Medium Washers

DIN 125 Form A



Material:
Steel 140 HV or stainless steel (A 2-70)

Surface finish:
Natural finish

Sample order:
nlm 07300-10

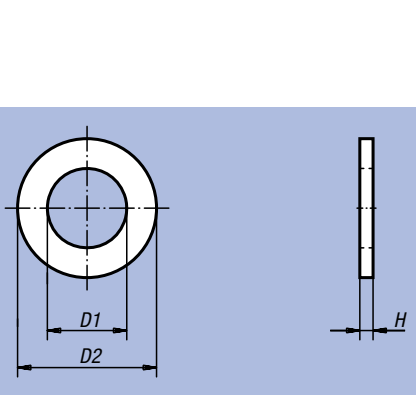

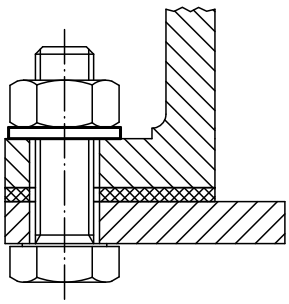

Order No. Material steel	Order No. Material stainless steel	for screws	D1	D2	H
07300-03	07300-103	M3	3,2	7	0,5
07300-04	07300-104	M4	4,3	9	0,8
07300-05	07300-105	M5	5,3	10	1
07300-06	07300-106	M6	6,4	12	1,6
07300-08	07300-108	M8	8,4	16	1,6
07300-10	07300-110	M10	10,5	20	2
07300-12	07300-112	M12	13	24	2,5
07300-14	07300-114	M14	15	28	2,5
07300-16	07300-116	M16	17	30	3
07300-20	07300-120	M20	21	37	3
07300-24	07300-124	M24	25	44	4
07300-30	07300-130	M30	31	56	4
07300-36	07300-136	M36	37	66	5

Self-limiting Bolt Locking Washers

DIN 25201



Material:
Steel or stainless steel

Surface finish:
Galvanised steel, surface hardness 47 HRC ±5%. Stainless steel, surface hardness HV 350 ±5%

Sample order:
nlm 07310-0817261

Note:
The self-limiting bolt-locking washers guarantee that bolted joints exposed to transverse stresses, oscillations and vibration will be safe from loosening. A joint is also secure at low levels of tension. If the bolt (nut) tends to loosen independently in bolted joints under dynamic stress, the bolt (nut) carries its positive-locking washer with it, the sloped surfaces of which run directly up against the slpoed surfaces of the counter-washer. In other words, the nore a bolted joint “tries“ to loosen itself, the more securely the wedge action of the washer blocks the attempt.

Supplied glued as a pair.

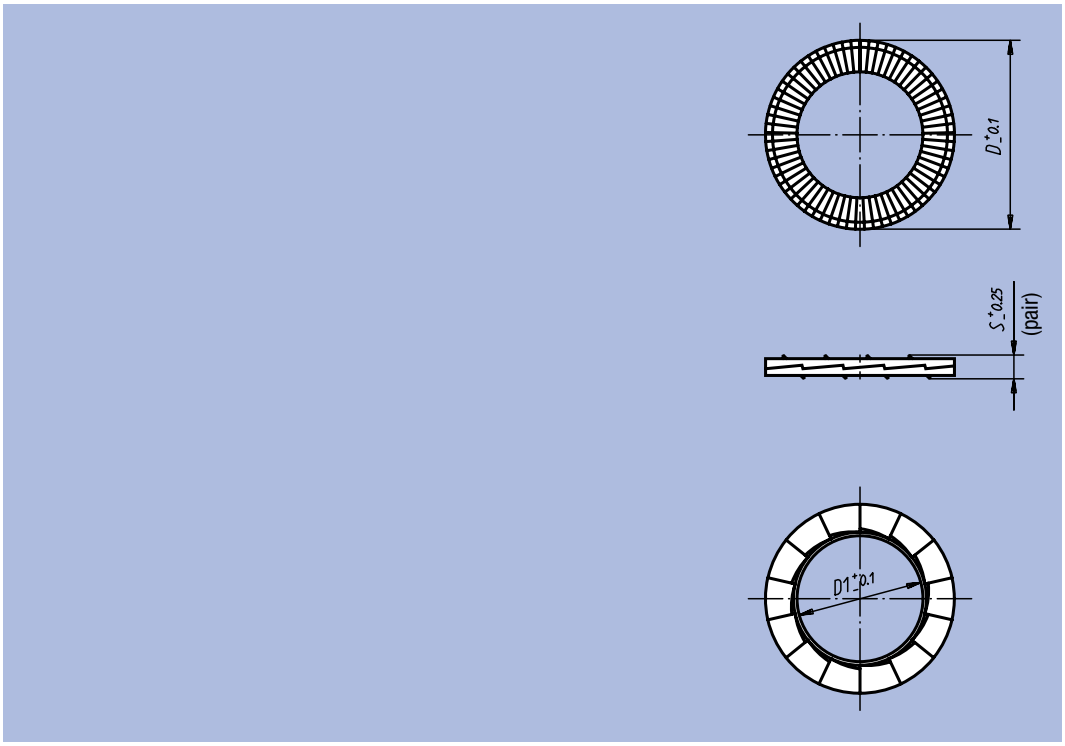

Order No.	Surface finish	for screws	for screws	D	D1	S
07310-030718	standard type	M3	1/8″	7	3,4	1,8
07310-050918	standard type	M5	3/16″	9	5,4	1,8
07310-061118	standard type	M6	1/4″	10,8	6,5	1,8
07310-081426	standard type	M8	5/16″	13,5	8,7	2,5
07310-101726	standard type	M10	3/8″	16,6	10,7	2,5
07310-122026	standard type	M12	1/2″	19,5	13	2,5
07310-162537	standard type	M16	5/8″	25,4	17	3,4
07310-182937	standard type	M18	11/16″	29	19,5	3,4
07310-203137	standard type	M20	3/4″	30,7	21,4	3,4
07310-030722	standard type stainless steel	M3	1/8″	7	3,4	2,2
07310-050922	standard type stainless steel	M5	3/16″	9	5,4	2,2
07310-061122	standard type stainless steel	M6	1/4″	10,8	6,5	2,2
07310-081422	standard type stainless steel	M8	5/16″	13,5	8,7	2,2
07310-101722	standard type stainless steel	M10	3/8″	16	10,7	2,2
07310-122022	standard type stainless steel	M12	1/2″	19,5	13	2,2
07310-162532	standard type stainless steel	M16	5/8″	25,4	17	3,2
07310-182932	standard type stainless steel	M18	11/16″	29	19,5	3,2
07310-203132	standard type stainless steel	M20	3/4″	30,7	21,4	3,2
07310-040918	aggrandized support surface	M4	5/32″	9	4,4	1,8
07310-061426	aggrandized support surface	M6	1/4″	13,5	6,5	2,5
07310-0817261	aggrandized support surface	M8	5/16″	16,6	8,7	2,5
07310-1021261	aggrandized support surface	M10	3/8″	21	10,7	2,5
07310-1225371	aggrandized support surface	M12	1/2″	25,4	13	3,4
07310-1631371	aggrandized support surface	M16	5/8″	30,7	17	3,4
07310-040922	aggrandized support surface stainless steel	M4	5/32″	9	4,4	2,2
07310-061422	aggrandized support surface stainless steel	M6	1/4″	13,5	6,5	2,2
07310-081722	aggrandized support surface stainless steel	M8	5/16″	16,6	8,7	2,2
07310-122532	aggrandized support surface stainless steel	M12	1/2″	25,4	13	3,2
07310-163132	aggrandized support surface stainless steel	M16	5/8″	30,7	17	3,2

Heavy-Duty Washers

in steel or aluminium DIN 6340



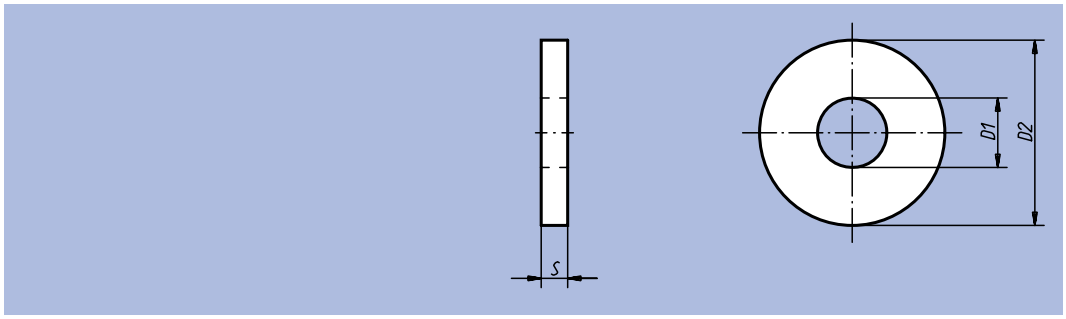

Material:
Steel or EN AW-7022

Surface finish:
Steel: stamped, pressed in a plane and tempered to strength 1200-1400 N/mm², black; steel turned: black oxide finish

Sample order:
nlm 07320-16

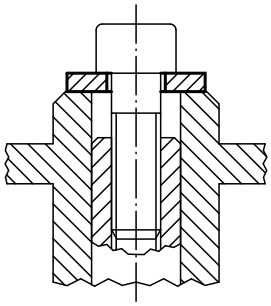

Order No. steel	Order No. aluminium	Order No. steel turned	D1	D2	S	for screw
07320-06	07320-206	07320-306	6,4	17	3	M6
07320-08	07320-208	07320-308	8,4	23	4	M8
07320-10	07320-210	07320-310	10,5	28	4	M10
07320-12	07320-212	07320-312	13	35	5	M12
07320-14	07320-214	07320-314	15	40	5	M14
07320-16	07320-216	07320-316	17	45	6	M16
07320-18	07320-218	07320-318	19	45	6	M18
07320-20	07320-220	07320-320	21	50	6	M20
07320-22	07320-222	-	23	50	8	M22
07320-24	07320-224	-	25	60	8	M24
07320-30	07320-230	-	31	68	10	M30
07320-36	07320-236	-	38	80	10	M36

Notes:

Circlips for shafts

DIN 471



Material, surface finish:
Spring steel, phosphated

Sample order:
nlm 07330-050600

Note:
The circlips per DIN 471 are universally usable, axially mountable securing elements for shafts. They can transmit large axial forces between the machine element (e.g., rolling-contact bearings) and the groove in which the ring is mounted.

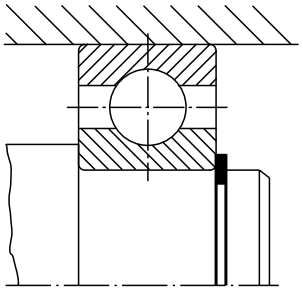

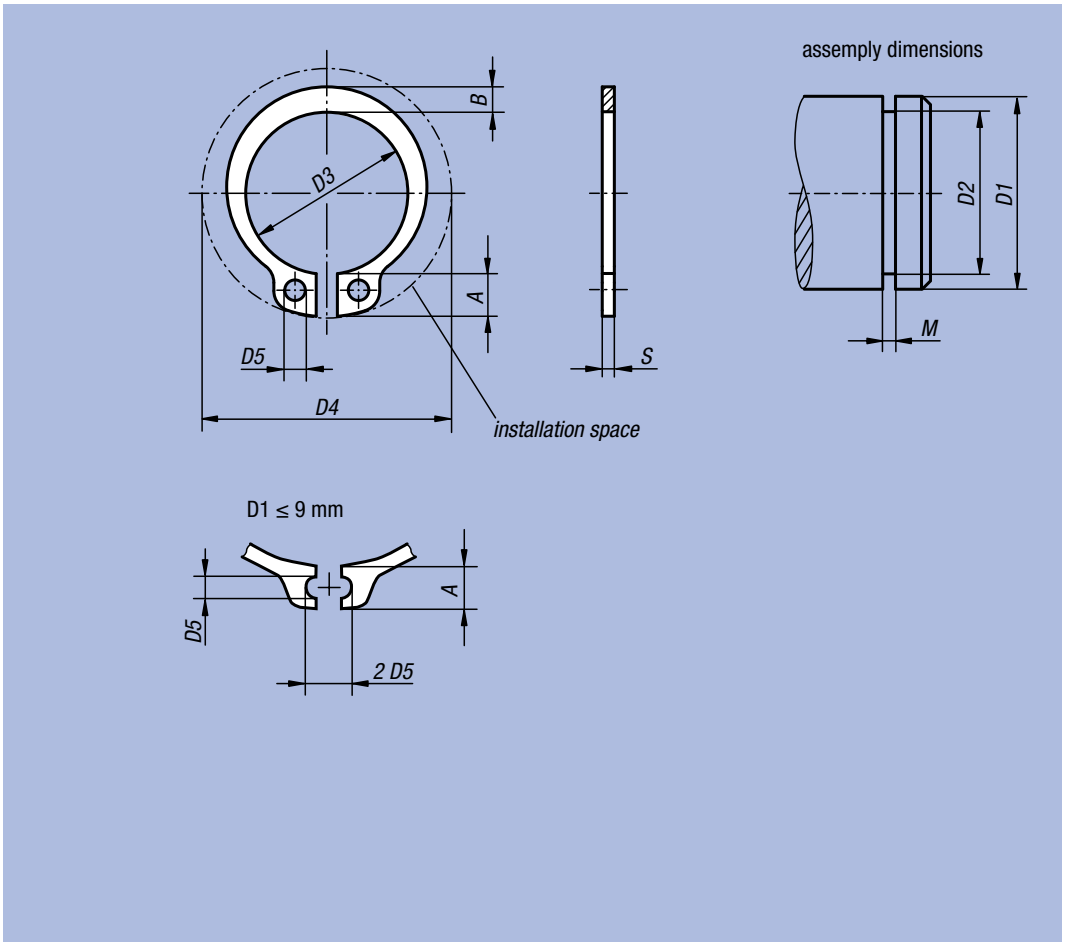

Order No.	A	B	D1	D2	D3	D4	D5	M	S	g
07330-050600	2,5	1,1	5	4,8	4,7	10,3	1	0,7	0,6	0,066
07330-060700	2,7	1,3	6	5,7	5,6	11,7	1,2	0,8	0,7	0,084
07330-080800	3,2	1,5	8	7,6	7,4	14,7	1,2	0,9	0,8	0,158
07330-101000	3,3	1,8	10	9,6	9,3	17	1,5	1,1	1	0,340
07330-121000	3,3	1,8	12	11,5	11	19	1,7	1,1	1	0,500
07330-141000	3,5	2,1	14	13,4	12,9	21,4	1,7	1,1	1	0,640
07330-151000	3,6	2,2	15	14,3	13,8	22,6	1,7	1,1	1	0,670
07330-161000	3,7	2,2	16	15,2	14,7	23,8	1,7	1,1	1	0,700
07330-171000	3,8	2,3	17	16,2	15,7	25	1,7	1,1	1	0,820
07330-181200	3,9	2,4	18	17	16,5	26,2	2	1,3	1,2	1,110
07330-201200	4	2,6	20	19	18,5	28,4	2	1,3	1,2	1,300
07330-221200	4,2	2,8	22	21	20,5	30,8	2	1,3	1,2	1,500
07330-251200	4,4	3	25	23,9	23,2	34,2	2	1,3	1,2	1,900
07330-301500	5	3,5	30	28,6	27,9	40,5	2	1,6	1,5	3,310
07330-351500	5,6	3,9	35	33	32,2	46,8	2,5	1,6	1,5	4,000
07330-502000	6,9	5,1	50	47	45,8	64,5	2,5	2,15	2	10,200

Circlips for holes

DIN 472



Material, surface finish:
Spring steel, phosphated

Sample order:
nlm 07331-080800

Note:
The circlips per DIN 472 are universally usable securing elements for bores. They can transmit large axial forces between the machine element (e.g., rolling-contact bearings) and the groove in which the ring is mounted.

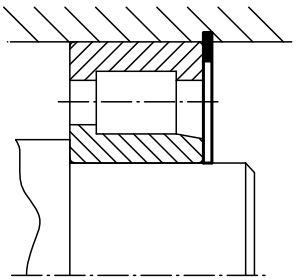

assemply dimensions

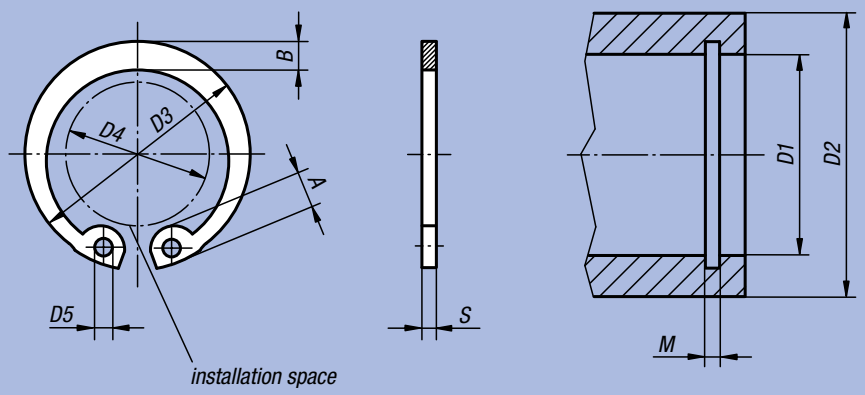

Order No.	A	B	D1	D2	D3	D4	D5	M	S	◻g
07331-080800	2,4	1,1	8	8,4	8,7	3	1	0,9	0,8	0,140
07331-101000	3,2	1,4	10	10,4	10,8	3,3	1,2	1,1	1	0,180
07331-121000	3,4	1,7	12	12,5	13	4,9	1,5	1,1	1	0,370
07331-141000	3,7	1,9	14	14,6	15,1	6,2	1,7	1,1	1	0,520
07331-151000	3,7	2	15	15,7	16,2	7,2	1,7	1,1	1	0,560
07331-161000	3,8	2	16	16,8	17,3	8	1,7	1,1	1	0,600
07331-171000	3,9	2,1	17	17,8	18,3	8,8	1,7	1,1	1	0,650
07331-181000	4,1	2,2	18	19	19,5	9,4	2	1,1	1	0,740
07331-201000	4,2	2,3	20	21	21,5	11,2	2	1,1	1	0,900
07331-221000	4,2	2,5	22	23	23,5	13,2	2	1,1	1	1,100
07331-251200	4,5	2,7	25	26,2	26,9	15,5	2	1,3	1,2	1,500
07331-301200	4,8	3	30	31,4	32,1	19,9	2	1,3	1,2	2,060
07331-351500	5,4	3,4	35	37	37,8	23,6	2,5	1,6	1,5	3,540
07331-502000	6,5	4,6	50	53	54,2	36,3	2,5	2,15	2	7,300

Spring Washers

DIN 2093



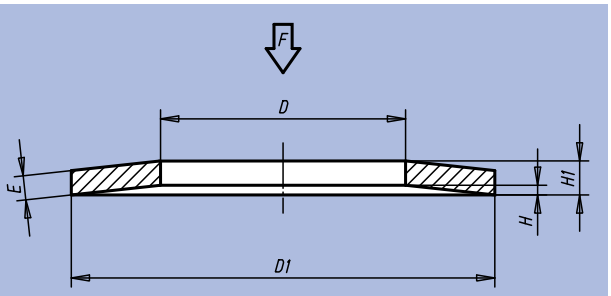

Material:
Spring steel

Surface finish:
Phosphated and greased

Sample order:
nlm 07360-080

Note:
If the spring plate is mounted in parallel, the force of the individual plate springs can be multiplied by the number of plates springs. That is, great spring force for short spring travel.
If the spring plate is mounted as a column, the force of the individual plate springs is equal to the force of the whole column. That is low spring force for a long spring travel.

$F = 0.25 \cdot H$

Order No.	D	D1	E	H	H1	F (N)
07360-030	3,2	8	0,4	0,2	0,6	69,2
07360-050	5,2	10	0,4	0,3	0,7	87,8
07360-051	5,2	15	0,7	0,55	1,25	340,2
07360-060	6,2	12,5	0,5	0,35	0,85	120,0
07360-061	6,2	12	0,5	0,35	0,85	133,5
07360-070	7,2	14	0,8	0,3	1,1	283,8
07360-080	8,2	16	0,9	0,35	1,25	362,5
07360-081	8,2	16	0,6	0,45	1,05	172,0
07360-090	9,2	18	1	0,4	1,4	450,6
07360-100	10,2	20	1,1	0,45	1,55	548,2
07360-101	10,2	20	0,9	0,55	1,45	411,7
07360-102	10,2	20	0,8	0,55	1,35	304,3
07360-120	12,2	25	1,5	0,55	2,05	1040,0
07360-121	12,2	23	1,25	0,6	1,85	863,4
07360-123	12,2	23	1	0,6	1,6	474,7
07360-140	14,2	28	1,5	0,65	2,15	1033,0
07360-141	14,2	28	1	0,8	1,8	490,0
07360-160	16,3	31,5	1,75	0,7	2,45	1391,0
07360-161	16,3	31,5	1,25	0,9	2,15	790,5
07360-180	18,3	35,5	2	0,8	2,8	1864,0
07360-182	18,3	35,5	1,25	1	2,25	730,9
07360-200	20,4	40	2,25	0,9	3,15	2336,0
07360-220	22,4	45	2,5	1	3,5	2773,0
07360-250	25,4	50	3	1,1	4,1	4255,0
07360-251	25,4	50	2,5	1,4	3,9	3473,0
07360-280	28,5	56	2	1,6	3,6	1910,0
07360-310	31	63	2,5	1,75	4,25	2942,0
07360-360	40,5	70	4	1,7	5,7	9025,0

Washers



Material, surface finish:
Steel 1.0718, black oxide finish;
stainless steel 1.4305, natural finish

Sample order:
nlm 07375-00416

Note:
Together with a countersunk screw DIN EN ISO 2009 or DIN EN ISO 10642 the washers are used at the front surface of shaft extensions for axial fastening and securing of handwheels and handles using a hub slot.

The washers can be used with the handwheels 06262, 06263, 06264, 06265, 06271, 06273, 06275, 06277, 06279, 06287, 06288 and crank handles 06500, 06502.

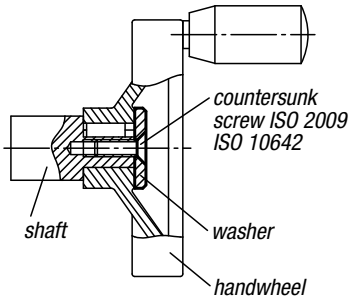

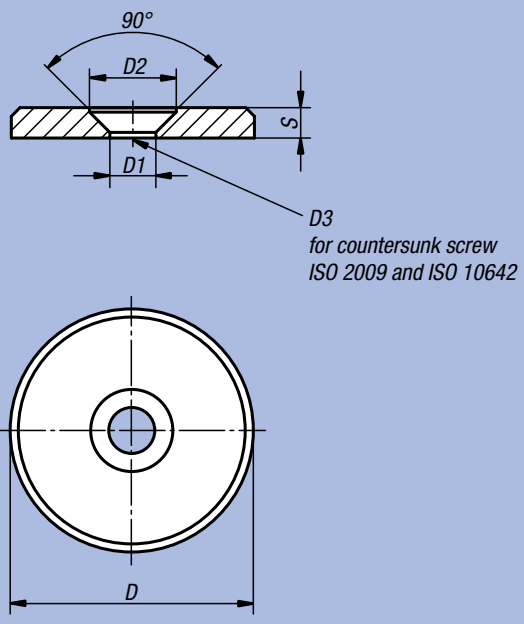

Order No. Material steel	Order No. Material stainless steel	D	D1	D2	D3	S	kg
07375-00416	07375-10416	16	4,3	8,4	M4	3	0,004
07375-00420	07375-10420	20	4,3	8,4	M4	3	0,004
07375-00522	07375-10522	22	5,3	10	M5	3,5	0,009
07375-00525	07375-10525	25	5,3	10	M5	3,5	0,012
07375-00528	07375-10528	28	5,3	10	M5	3,5	0,012
07375-00632	07375-10632	32	6,4	12	M6	4	0,022
07375-00636	07375-10636	36	6,4	12	M6	4	0,029
07375-00640	07375-10640	40	6,4	12	M6	5	0,046
07375-00645	07375-10645	45	6,4	12	M6	6	0,071
07375-00652	07375-10652	52	6,4	12	M6	6	0,094

Projecting Washer for devices

to DIN 6372 extended

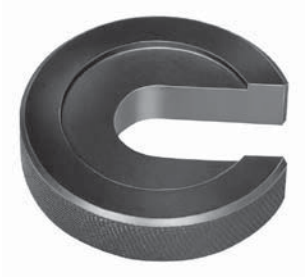

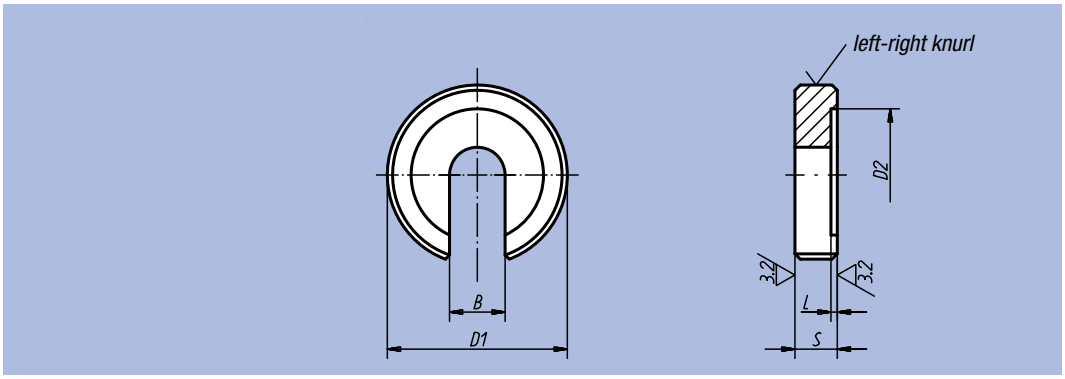

Material:
Tempered steel

Surface finish:
Heat-treated and black oxide finish

Sample order:
nlm 07380-12

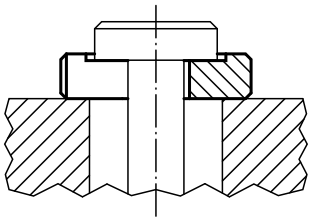

Order No.	B	D1	D2	L	S	kg
07380-05	5,25	17	12	0,75	5	0,011
07380-06	6,4	22	16	0,8	6	0,012
07380-08	8,4	28	21	1	7	0,022
07380-10	10,5	34	25	1,2	8	0,040
07380-12	13	40	30	1,8	9	0,058
07380-14	14,5	48	33	1,8	12	0,110
07380-16	17	56	37	1,8	12	0,165
07380-20	21	64	45	2	14	0,230
07380-24	25	75	52	2	16	0,320
07380-30	31	90	65	2	18	0,720
07380-36	37	100	75	2,5	20	0,870

Notes:

Concave and Convex Washers

DIN 6319, 10/01



Material:
Hardened steel or stainless steel; Form G in tempered, heat- treaded steel at HV 390 ±40

Surface finish:
Case-hardened; stainless steel not hardened, natural finish

Sample order:
nlm 07420-216

Note:
Use form G for rough surfaces, ablong holes or notches.

Statements on load capacity are not valid for stainless steel versions.

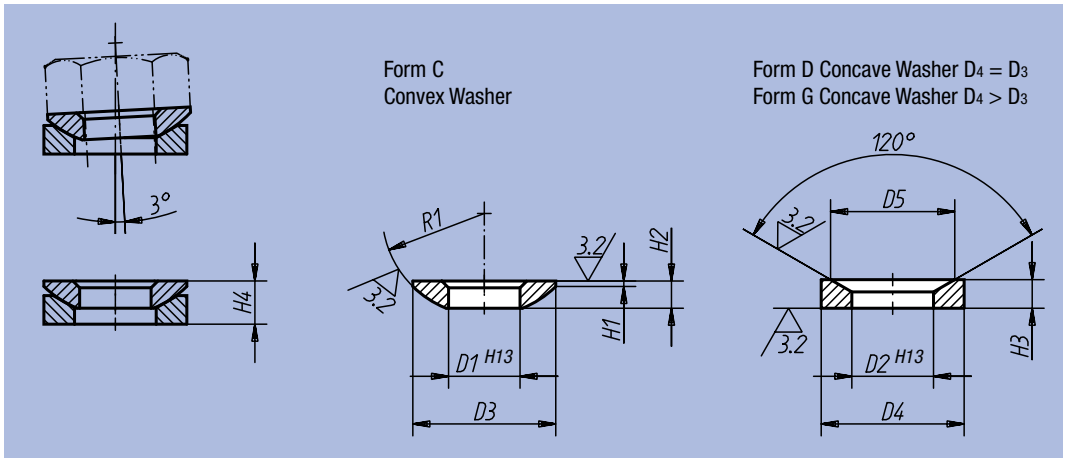

Order No. Material steel	Order No. Material stainless steel	Form	D1	D2	D3	D4	D5	H1	H2	H3	H4 with concave washer	R1	for screw Ø	Load capacity max. kN (static load only)	≈ g
07420-105	-	C	5,25	-	10,5	-	-	0,4	2	-	-	7,5	5	-	0,8
07420-106	07420-0106	C	6,4	-	12	-	-	0,7	2,3	-	-	9	6	9	0,9
07420-108	07420-0108	C	8,4	-	17	-	-	0,6	3,2	-	-	12	8	17	2,5
07420-110	07420-0110	C	10,5	-	21	-	-	0,8	4	-	-	15	10	26	5,0
07420-112	07420-0112	C	13	-	24	-	-	1,1	4,6	-	-	17	12	38	7,3
07420-114	-	C	15	-	28	-	-	1,2	5	-	-	22	14	53	11,4
07420-116	07420-0116	C	17	-	30	-	-	1,3	5,3	-	-	22	16	73	12,7
07420-120	07420-0120	C	21	-	36	-	-	2	6,3	-	-	27	20	117	22,0
07420-124	07420-0124	C	25	-	44	-	-	2,4	8,2	-	-	32	24	168	43,0
07420-130	07420-0130	C	31	-	56	-	-	3,6	11,2	-	-	41	30	269	110,0
07420-136	07420-0136	C	37	-	68	-	-	4,6	14	-	-	50	36	394	190,0
07420-142	07420-0142	C	43	-	78	-	-	6,5	17	-	-	58	42	542	305,0
07420-148	07420-0148	C	50	-	92	-	-	8	21	-	-	67	48	714	540,0
07420-156	-	C	58	-	103	-	-	9,5	23	-	-	79	56	-	760,0
07420-164	-	C	66	-	120	-	-	12	27	-	-	93	64	-	1220,0
07420-205	-	D	-	6	-	10,5	9,25	-	-	2,1	3,1	-	5	-	1,5
07420-206	07420-0206	D	-	7,1	-	12	11	-	-	2,8	4	-	6	9	1,3
07420-208	07420-0208	D	-	9,6	-	17	14,5	-	-	3,5	5,3	-	8	17	3,5
07420-210	07420-0210	D	-	12	-	21	18,5	-	-	4,2	6,3	-	10	26	6,7
07420-212	07420-0212	D	-	14,2	-	24	20	-	-	5	8	-	12	38	10,0
07420-214	-	D	-	16,5	-	28	24,8	-	-	5,6	8,2	-	14	53	14,4
07420-216	07420-0216	D	-	19	-	30	26	-	-	6,2	9,3	-	16	73	18,0
07420-220	07420-0220	D	-	23,2	-	36	31	-	-	7,5	11,6	-	20	117	31,0
07420-224	07420-0224	D	-	28	-	44	37	-	-	9,5	15	-	24	168	61,0
07420-230	07420-0230	D	-	35	-	56	49	-	-	12	18,9	-	30	269	130,0
07420-236	07420-0236	D	-	42	-	68	60	-	-	15	23,3	-	36	394	230,0
07420-242	07420-0242	D	-	49	-	78	70	-	-	18	28,3	-	42	542	360,0
07420-248	07420-0248	D	-	56	-	92	82	-	-	22	35,2	-	48	714	640,0
07420-256	-	D	-	65	-	103	92	-	-	25	39,7	-	56	-	900,0
07420-264	-	D	-	75	-	120	110	-	-	30	46,5	-	64	-	1430,0
07420-305	-	G	-	6	-	15	9,25	-	-	2,5	3,5	-	5	-	3,5
07420-306	07420-0306	G	-	7,1	-	17	11	-	-	4	5,2	-	6	9	5,3
07420-308	07420-0308	G	-	9,6	-	24	14,5	-	-	5	6,8	-	8	17	13,5
07420-310	07420-0310	G	-	12	-	30	18,5	-	-	5	7,1	-	10	26	21,0
07420-312	07420-0312	G	-	14,2	-	36	20	-	-	6	9	-	12	38	38,0
07420-314	-	G	-	16,5	-	40	24,8	-	-	6	8,6	-	14	53	47,0
07420-316	07420-0316	G	-	19	-	44	26	-	-	7	10,1	-	16	73	64,0
07420-320	07420-0320	G	-	23,2	-	50	31	-	-	8	12	-	20	117	92,0
07420-324	07420-0324	G	-	28	-	60	37	-	-	10	15,5	-	24	168	165,0
07420-330	07420-0330	G	-	35	-	68	49	-	-	12	18,7	-	30	269	238,0
07420-336	-	G	-	42	-	80	60	-	-	12	20,3	-	36	394	350,0

Ball Head Position Adjuster



Material:
Steel 1.7225; stainless steel 1.4305

Surface finish:
Steel blue-chromated; stainless steel natural finish

Sample order:
nlm 07460-401

Note:
The Ball Head Position Adjuster allows exact positioning when assembling sloping bases up to approx. 4° angle of inclination. A further Ball Head Position Adjuster is recommended as a base in sloped positions of D3 > 1° for evenly positioning the bolts.

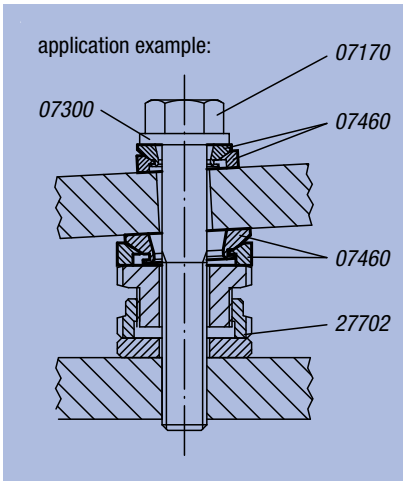

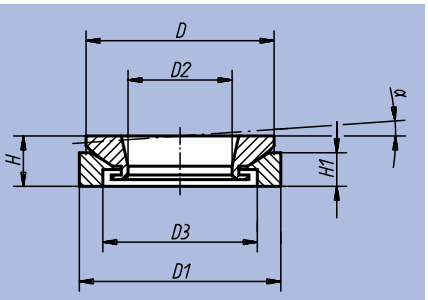

Order No. Material steel	Order No. Material stainless steel	H	H1	D	D1	D2	D3	α
07460-151	07460-152	8	5,5	23	25	8,5	15	4°
07460-201	07460-202	10	6,2	30	32	13	20	4°
07460-301	07460-302	12,5	9	40	45	20	30	4°
07460-401	07460-402	16	13	52	58	29	38	4°
07460-501	07460-502	20	14	65	70	36	48	4°

Captive C-Washers

DIN 6371



Material:
Tempered steel 1.0503

Surface finish:
Nitrided and black oxide finish

Sample order:
nlm 07520-12

Note:
07520-14 is not standard. Suitable Shoulder Screws see 07530.

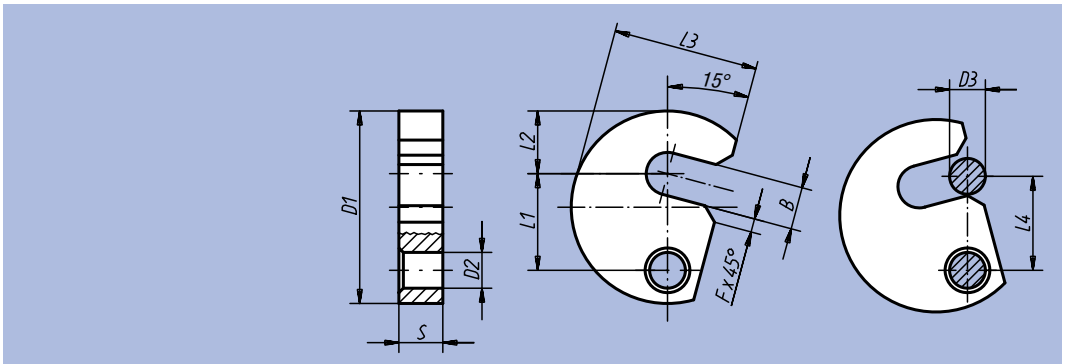

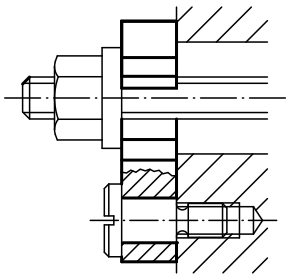

Order No.	B	D1	D2	D3	F	L1	L2	L3	L4	S	kg
07520-06	7,5	38	9	6	3	19,6	11	29	19	9,8	0,061
07520-08	9,5	43	9	8	3	21,6	14	32,5	21	9,8	0,076
07520-10	11,5	48	9	10	3	23,6	17	36,5	23	9,8	0,090
07520-12	13,5	61	11	12	3	29,6	22	45	29	11,8	0,180
07520-14	15,5	65	11	14	3	31,6	23	49	31	11,8	0,200
07520-16	17,5	68	11	16	3	33,6	25	50	33	11,8	0,210
07520-20	21,5	74	11	20	4	36,6	28	55	36	11,8	0,230

Spacing Washers

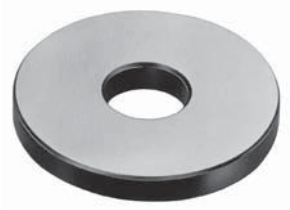

Material:
Tempered steel

Surface finish:
Heat-treated and black oxide finish; bearing surfaces, ground

Sample order:
nlm 07523-16005

Note:
The Spacing Washer is used to alter the clamping capacity of HookClamp and Hook Holder. If the Spacing Washer is inserted between the body and the Hook Holder or Joint Bar, it prevents damage to the support surface.

application example:

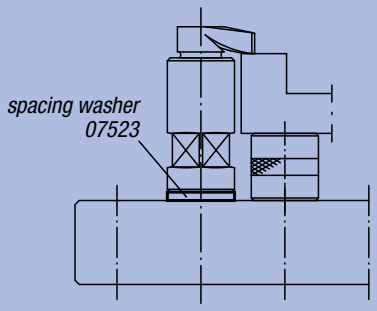

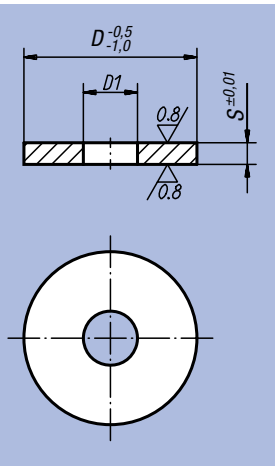

Order No.	D	D1	S	kg
07523-12001	40	12,5	1	0,009
07523-12003	40	12,5	3	0,027
07523-12005	40	12,5	5	0,045
07523-16001	50	16,5	1	0,014
07523-16003	50	16,5	3	0,042
07523-16005	50	16,5	5	0,068
07523-16105	60	16,5	5	0,100

Shoulder Screws with slotted flat head

DIN 923





Material:
Steel

Surface finish:
Black oxide finish, class 5.8

Sample order:
nlm 07530-08

Note:
For use with Captive C-Washers 07520.

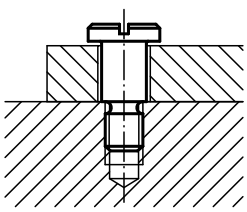

Order No.	D1	D2	D3	L	B	K	g
07530-06	M6	13	8	10 +0,15/+0,07	9	3,1	9
07530-08	M8	16	10	12 +0,2/+0,1	11	3,8	17
07530-10	M10	20	13	16 +0,2/+0,1	13,5	4,6	36

Locating Bolts



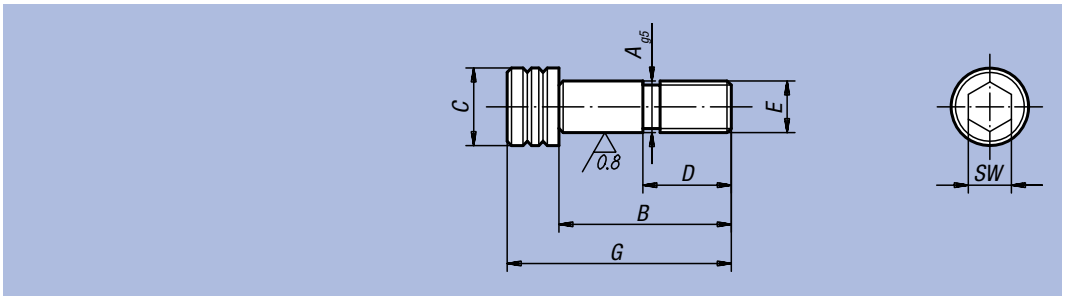

Material:
Tempered steel

Surface finish:
Heat-treated and black oxide finish;
shank ground

Sample order:
nlm 07533-12065

Order No.	A	B	C	D	E	G	SW	kg
07533-12045	12	45	18	22	M12	57	10	0,050
07533-12055	12	55	18	22	M12	67	10	0,060
07533-12065	12	65	18	22	M12	77	10	0,065
07533-12075	12	75	18	22	M12	87	10	0,075
07533-16055	16	55	24	25	M16	71	14	0,115
07533-16065	16	65	24	25	M16	81	14	0,130
07533-16075	16	75	24	25	M16	91	14	0,145

Hexagon Socket Head Shoulder Screws

similar to DIN ISO 7379



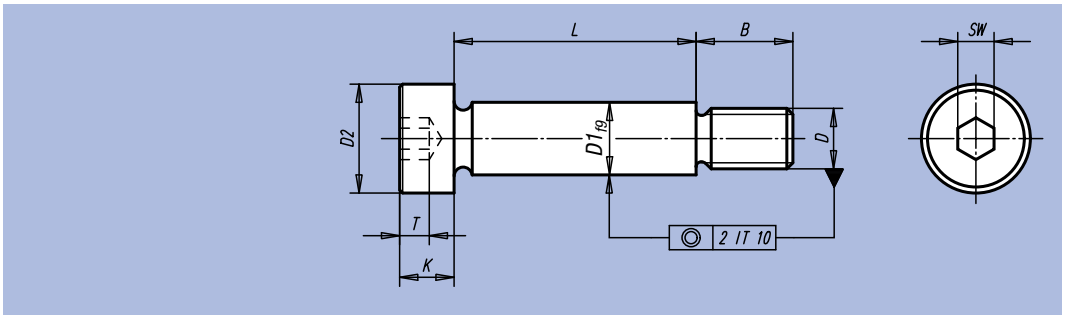

Material:
Steel

Surface finish:
Class 12.9, black oxide finish;
shaft diameter ground

Sample order:
nlm 07534-06X20
(Please also indicate dimension L)

Note:
Hexagon Socket Head Shoulder Screws can do more than conventional screws. They are considered as "design elements" for many purposes. They frequently lead to the most cost-effective solution because they simplify complicated designs. Hexagon Socket Head Shoulder Screws today provide the decisive rationalisation effects.

Order No.	D1	D	D2	B	K	T	SW	L
07534-06X	6	M5	10	9,5 ±0,25	4,5	2,4	3	16 / 20 / 25 / 30 / 40 / 50 / 60
07534-08X	8	M6	13	11 ±0,25	5,5	3,3	4	16 / 20 / 25 / 30 / 40 / 50 / 60
07534-10X	10	M8	16	13 ±0,25	7	4,2	5	16 / 20 / 25 / 30 / 40 / 50 / 60 / 70 / 80
07534-12X	12	M10	18	16 ±0,40	9	4,9	6	30 / 40 / 50 / 60 / 70 / 80 / 90 / 100
07534-16X	16	M12	24	18 ±0,40	11	6,6	8	40 / 50 / 60 / 70 / 80 / 90 / 100 / 120
07534-20X	20	M16	30	22 ±0,40	14	8,8	10	50 / 60 / 70 / 80 / 90 / 100 / 120

Hexagon Fits Bolts with long thread

DIN 609



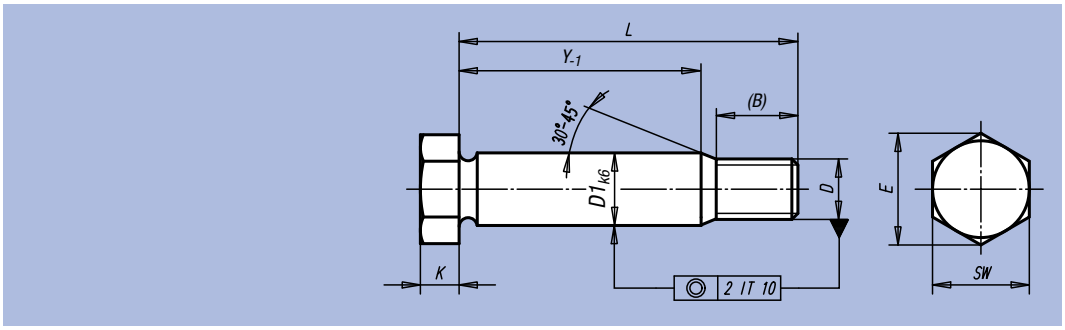

Material:
Steel

Surface finish:
Class 8.8, black oxide finish;
shaft diameter ground

Sample order:
nlm 07535-09X40
(Please also indicate dimension L)

Note:
Hexagon Fits Bolts are used if the bolted joint has to absorb transverse forces or if the pieces for machining have to be secured in position relative to each other.

Order No.	D1	D	(B) Auxiliary dimension	E	K	SW	Y	L
07535-09X25	9	M8	14,5	14,38	5,3	13	8	25
07535-09X30	9	M8	14,5	14,38	5,3	13	13	30
07535-09X35	9	M8	14,5	14,38	5,3	13	18	35
07535-09X40	9	M8	14,5	14,38	5,3	13	23	40
07535-09X45	9	M8	14,5	14,38	5,3	13	28	45
07535-09X50	9	M8	14,5	14,38	5,3	13	33	50
07535-09X60	9	M8	16,5	14,38	5,3	13	41	60
07535-11X30	11	M10	17,5	17,77	6,4	17	10	30
07535-11X35	11	M10	17,5	17,77	6,4	17	15	35
07535-11X40	11	M10	17,5	17,77	6,4	17	20	40
07535-11X45	11	M10	17,5	17,77	6,4	17	25	45
07535-11X50	11	M10	17,5	17,77	6,4	17	30	50
07535-11X60	11	M10	19,5	17,77	6,4	17	38	60
07535-11X70	11	M10	19,5	17,77	6,4	17	48	70
07535-11X80	11	M10	19,5	17,77	6,4	17	58	80
07535-11X90	11	M10	19,5	17,77	6,4	17	68	90
07535-11X100	11	M10	19,5	17,77	6,4	17	78	100
07535-13X35	13	M12	20,5	19,85	7,5	19	11,5	35
07535-13X40	13	M12	20,5	19,85	7,5	19	16,5	40
07535-13X45	13	M12	20,5	19,85	7,5	19	21,5	45
07535-13X50	13	M12	20,5	19,85	7,5	19	26,5	50
07535-13X60	13	M12	22,5	19,85	7,5	19	34,5	60
07535-13X70	13	M12	22,5	19,85	7,5	19	44,5	70
07535-13X80	13	M12	22,5	19,85	7,5	19	54,5	80
07535-13X90	13	M12	22,5	19,85	7,5	19	64,5	90
07535-13X100	13	M12	22,5	19,85	7,5	19	74,5	100
07535-17X40	17	M16	25	26,17	10	24	11,5	40
07535-17X45	17	M16	25	26,17	10	24	16,5	45
07535-17X50	17	M16	25	26,17	10	24	21,5	50
07535-17X60	17	M16	27	26,17	10	24	29,5	60
07535-17X70	17	M16	27	26,17	10	24	39,5	70
07535-17X80	17	M16	27	26,17	10	24	49,5	80
07535-17X90	17	M16	27	26,17	10	24	59,5	90
07535-17X100	17	M16	27	26,17	10	24	69,5	100
07535-21X50	21	M20	28,5	32,95	12,5	30	17,5	50
07535-21X60	21	M20	30,5	32,95	12,5	30	25,5	60
07535-21X70	21	M20	30,5	32,95	12,5	30	35,5	70
07535-21X80	21	M20	30,5	32,95	12,5	30	45,5	80
07535-21X90	21	M20	30,5	32,95	12,5	30	55,5	90
07535-21X100	21	M20	30,5	32,95	12,5	30	65,5	100
07535-21X120	21	M20	30,5	32,95	12,5	30	85,5	120
07535-25X60	25	M24	36,5	39,35	15	36	19	60
07535-25X70	25	M24	36,5	39,35	15	36	29	70
07535-25X80	25	M24	36,5	39,35	15	36	39	80
07535-25X90	25	M24	36,5	39,35	15	36	49	90
07535-25X100	25	M24	36,5	39,35	15	36	59	100
07535-25X120	25	M24	36,5	39,35	15	36	79	120

Shoulder Screws

with slotted domed head



Material:
Tempered steel
Surface finish:
Black oxide finish
Sample order:
nlm 07540-10

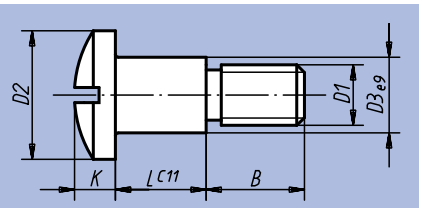

Order No.	D1	D2	D3	L	B	K	kg
07540-06	M6	14	8	10,2	9,8	6	0,012
07540-08	M8	18	10	12,2	11,8	7	0,023
07540-10	M10	22	12	14,2	14,8	9	0,042
07540-12	M12	22	14	16,2	15,8	9	0,053

Hinged Fastener

DIN 6310

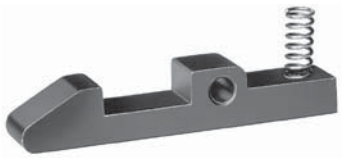

Material:
Tempered steel 1.1192
Surface finish:
Black oxide finish, hardened nose (see grey hatched area)
Sample order:
nlm 07560-02
Note:
The spring is included in the supply.
Spring dimensions:
Ø 4.8 x 14
Ø 5.8 x 17
Ø 7.3 x 21

application example:

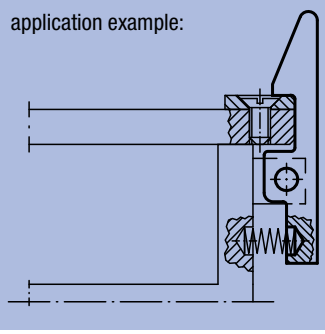

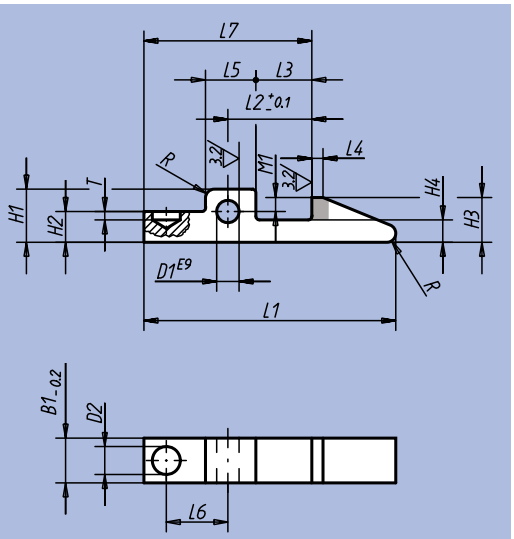

Order No.	L1	B1	D1	D2	H1	H2	H3	H4	L2	L3	L4	L5	L6	L7	M1	T	R	kg
07560-01	45	8	4	5	9,5	5,5	8	4	15	10	2	9	11	30	2,5	1,5	1,6	0,015
07560-02	60	10	5	6,3	12	7	10	5	20	14	3	11	15	40	3	3	2,5	0,032
07560-03	80	14	6	8	15	9	14	7	30	22	5	14	23	60	5	5	4	0,080

Quarter-Turn Screws



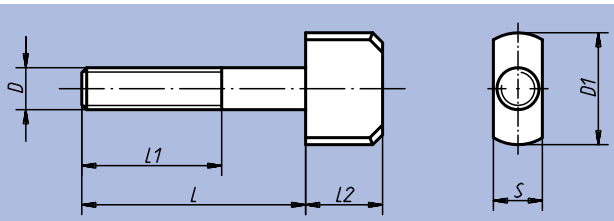

Material:
Tempered steel 1.1191

Surface finish:
Heat-treated class 8.8, black oxide finish

Sample order:
nlm 07570-10

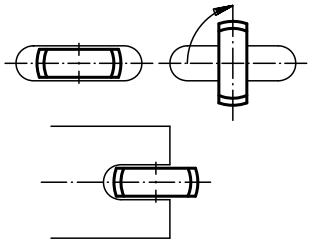

Order No.	D	D1	L	L1	L2	S	kg
07570-06	M6	20	30	25	14	6,5	0,018
07570-08	M8	25	40	30	16	8,5	0,036
07570-10	M10	28	50	40	16	10,5	0,051
07570-12	M12	32	60	50	20	12,5	0,100

Slotted Round Nuts

DIN 1804



Form W = not hardened
Form H = hardened and ground



Material:
Hardened steel

Surface finish:
Form W = black oxide finish,
Form H = hardened face surface ground

Sample order:
nlm 07590-120

Note:
Form H is case hardened, with the exception of the thread. The two surface planes are ground.

Order No. Form W	Order No. Form H	D1	D2	D3	H	B	T	kg
07590-110	07590-210	M10x1	25	20	6	5	2	0,017
07590-112	07590-212	M12x1,5	28	23	6	5	2	0,022
07590-114	07590-214	M14x1,5	30	25	7	5	2	0,029
07590-116	07590-216	M16x1,5	32	27	7	5	2	0,031
07590-118	07590-218	M18x1,5	34	28	8	6	2,5	0,038
07590-120	07590-220	M20x1,5	36	30	8	6	2,5	0,041
07590-122	07590-222	M22x1,5	40	34	9	6	2,5	0,060
07590-124	07590-224	M24x1,5	42	36	9	6	2,5	0,063
07590-126	07590-226	M26x1,5	45	38	10	7	3	0,078
07590-128	07590-228	M28x1,5	50	43	10	7	3	0,101
07590-130	07590-230	M30x1,5	50	43	10	7	3	0,093
07590-132	07590-232	M32x1,5	52	45	11	7	3	0,108
07590-135	07590-235	M35x1,5	55	48	11	7	3	0,117
07590-138	07590-238	M38x1,5	58	50	11	8	3,5	0,123
07590-140	07590-240	M40x1,5	62	54	12	8	3,5	0,159
07590-142	07590-242	M42x1,5	62	54	12	8	3,5	0,147

Slot Nuts with elastic stop ring



Material:
Free-cutting steel; circlips: polyamid (max. 100 °C)

Surface finish:
Galvanized

Sample order:
nlm 07595-24

Note:
The use of slot nuts with elastic stop rings has enormous cost advantages, in as much as securing plates and therefore also expensive milling work for a wedged slot are omitted.
The polyamide ring is resistant to petrol and oil.
Slot nuts with elastic stop rings can be used several times. They withstand the strongest vibrations and oscilations irrespective of the torque and are therefore usable as adjusting nuts.

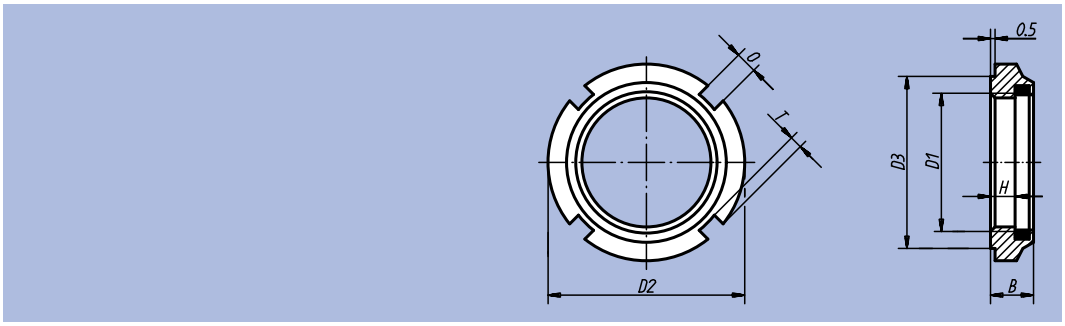

Order No.	D1	D2	D3	H	B	T	O	kg
07595-10	M10x1	18	15	4,4	7,6	1,5	3	0,015
07595-12	M12x1,5	21	18	5,7	9,2	1,5	3	0,020
07595-14	M14x1,5	24	21	6	10,7	1,5	4	0,025
07595-16	M16x1,5	28	24	6	10,7	2	4	0,028
07595-18	M18x1,5	28	24	7,3	10,7	2	4	0,030
07595-20	M20x1,5	32	27	6	9,6	2,5	4	0,035
07595-22	M22x1,5	38	33	7	12,7	2,5	5	0,038
07595-24	M24x1,5	38	33	6,2	10,7	2,5	5	0,045
07595-28	M28x1,5	44	38	6,9	11,2	3	5	0,055
07595-30	M30x1,5	44	38	6,5	11	3	5	0,053
07595-32	M32x1,5	50	44	6,6	11,2	3	5	0,065
07595-35	M35x1,5	50	44	7	11	3	5	0,062
07595-38	M38x1,5	53	47	6,6	12,2	3	5	0,075
07595-40	M40x1,5	56	50	7	12	3	6	0,082
07595-42	M42x1,5	62	55	10,6	15,2	3,5	6	0,085

Notes:

Technical Information for Adjusting Nuts

Assembly:

1. Carefully clean the adjusting nut and the connectors and lightly dampen with standard luboil without anitfriction additives.
2. Screw the adjusting nut onto the spindle thread, not yet making contact with the face (Figure 1).
3. Tension the clamping screws uniformly and crosswise by turning the adjusting nut back and forth until it moves nearly play-free with saturated movement (Figure 2).
4. Now just draw up the adjusting nut with an increased pretensioning torque (approx. 30%) against the face, then loosen again and finally tension with specified pretensioning torque (Figure 3). By performing these steps, a subsequent setting on the contact surfaces (screw head flanks, faces) is avoided.
5. Subsequently, secure the adjusting nut with uniform tensioning of the clamping screws. During highest demand, spindle run-out can, following inspection, be positively impacted via individual retightening of the clamping screws. Possible unidirectional clampings caused by small connector run-out errors are thus counterbalanced.

Disassembly:

First, remove the tension on the clamping screws slightly in the crosswise direction. Only then can the clamping screws be fully unscrewed. In this way, the overall clamping of the diaphragm is prevented from affecting the last clamping screw to be unfastened and locks it in the process.

Once an adjusting screw has been secured to a spindle thread, following dismantling, it must always be used on the same spindle, exclusively. Otherwise, fitting actions that have occurred between spindle and adjusting nut can lead to problems when installing on another spindle.

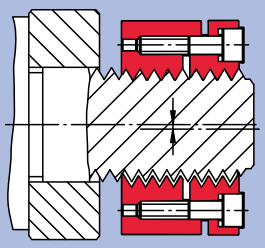

Figure 1

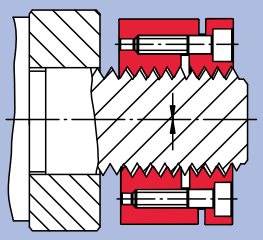

Figure 2

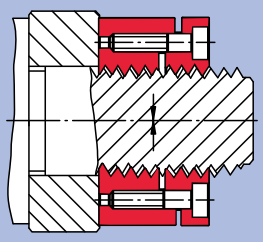

Figure 3

Setting an axial pretensioning force:

The axial pretensioning of a screw connection is often function critical and therefore must be set sufficiently accurately. However, measuring this size directly in the course of the assembly operation is not possible for the most part; consequently, the setting must be undertaken in an indirect way. The adjusting screw pretensioning torque relative to the desired pretentsioning force is calculated for this purpose.

This can be determined per the following correlation:

$$M_v = \frac{(F_v + V) \cdot (U + \mu A \cdot rA)}{1000} \text{ [Nm]}$$

M_v = Pretensioning torque of the adjusting nut (Nm)
F_v = Required axial pretensioning force of the screw connection (N)
V = Adjusting nut-specific loading (N), compensates the face load alleviation per the securing process
U = Constant (mm), includes the coefficient of utilization for the respective thread (see table)
μA = Coefficient of friction for the locating face of the adjusting nut. Approximate value μA = 0.1 (steel/steel)
rA = operative frictional radius for the locating face of the adjusting nut (mm)

The action of securing subjects the spindle thread to stress and produces here an intense edge lay (= high axial rigidity). At the same time, this effect takes the pressure off of the face of the adjusting nut, which can be easily counterbalanced by correspondingly higher pretensioning torque in the course of assembly. This higher pretensioning torque is transferred by loading V to the required pretensioning force F_v.

Order No.	Coefficient of utilization U (mm)	Adjusting nut of specific loading V (N)
07598-024101015	0,703	2457
07598-026121515	0,881	2438
07598-032141516	0,997	2995
07598-034161518	1,112	3962
07598-036181518	1,228	3931
07598-040201518	1,344	3900
07598-040221518	1,459	3869

Order No.	Coefficient of utilization U (mm)	Adjusting nut of specific loading V (N)
07598-042241518	1,575	3838
07598-045261520	1,690	3806
07598-046281520	1,805	3775
07598-048301520	1,921	3744
07598-050321522	2,037	3713
07598-053351522	2,210	3666

Adjusting Nuts



Material:
Steel;
clamping screws in tempered steel

Surface finish:
Black oxide finish;
clamping screws to ISO 4762, quality class 12.9

Sample order:
nlm 07598-024101015

Note:
Two torque parts that are connected with one another elastically are tightened with opposing screws. The adjusting nut is designed axially symmerically. There are no unbalance generating slots or recesses.

Attention:
The adjusting nut is deformable in the axial direction and must therefore be handled with care. The clamping screws may only be applied when the adjusting nut is completely screwed on to the shaft thread. Otherwise, the adjusting nut could become defective through unacceptable plastic deformation.

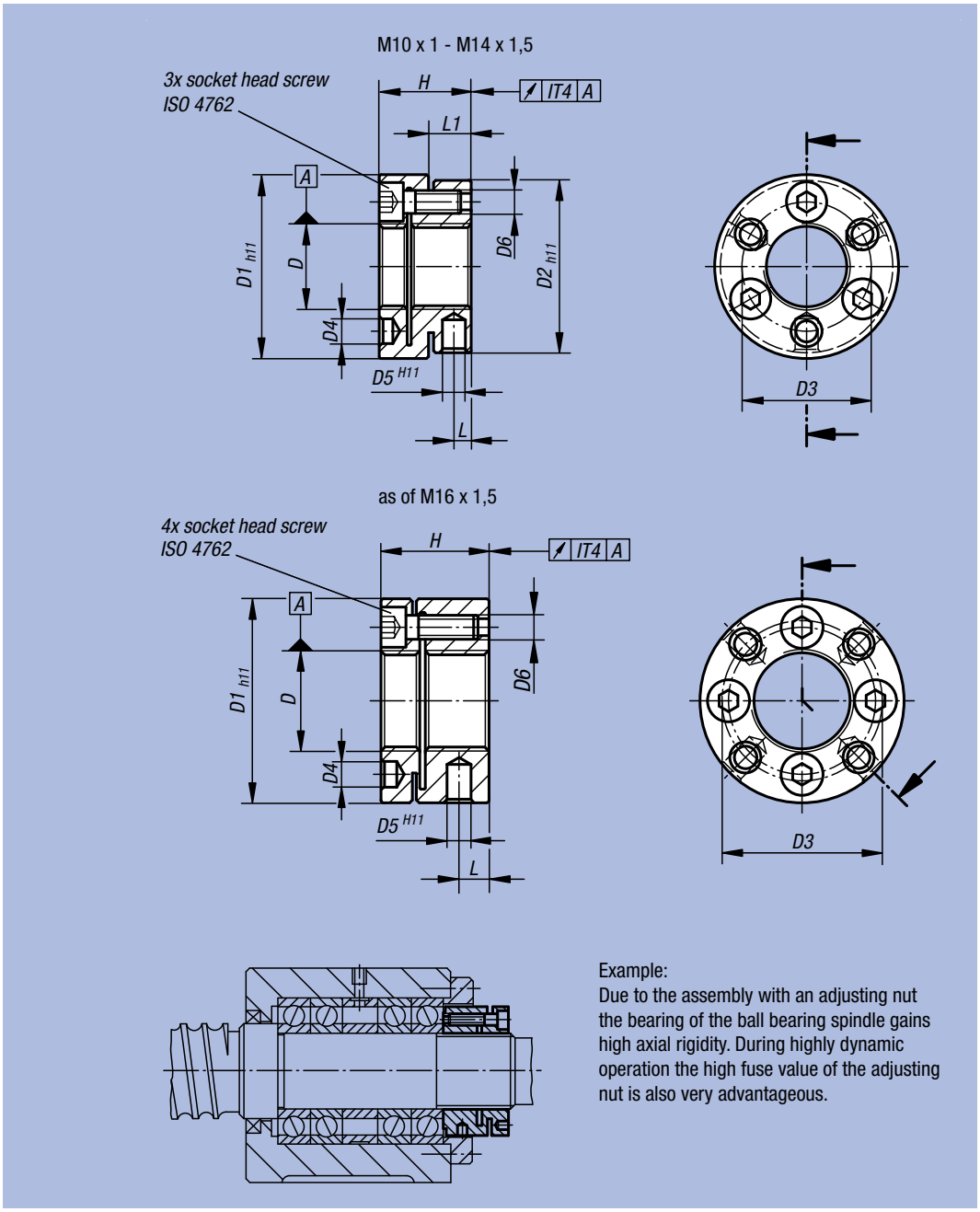

Example:
Due to the assembly with an adjusting nut the bearing of the ball bearing spindle gains high axial rigidity. During highly dynamic operation the high fuse value of the adjusting nut is also very advantageous.

Order No.	D	D1	D2	D3	D4	D5	D6	H	L	L1	Tightening torque of screws (Nm)	Max. static axial pressure stress N	Max. dynamic axial pressure stress N	Inertia (gcm²)	kg
07598-024101015	M10x1	24	22	17	3,2	2,5	M3	15	3	6,5	2	15000	12000	27	0,032
07598-026121515	M12x1,5	26	25	19	3,2	3	M3	15	3	6,5	2	18000	13000	40	0,038
07598-032141516	M14x1,5	32	30	22,5	4,3	4	M4	16	3	7	2,9	22000	17000	96	0,062
07598-034161518	M16x1,5	34	-	24,5	4,3	4	M4	18	5	-	2,9	22000	17000	147	0,078
07598-036181518	M18x1,5	36	-	26,5	4,3	4	M4	18	5	-	2,9	25000	19000	183	0,085
07598-040201518	M20x1,5	40	-	30,5	4,3	4	M4	18	5	-	2,9	28000	18000	283	0,108
07598-040221518	M22x1,5	40	-	30,5	4,3	4	M4	18	5	-	2,9	32000	23000	270	0,099
07598-042241518	M24x1,5	42	-	32,5	4,3	4	M4	18	5	-	2,9	35000	25000	323	0,106
07598-045261520	M26x1,5	45	-	36,5	4,3	5	M4	20	6,5	-	2,9	49000	34000	479	0,135
07598-046281520	M28x1,5	46	-	38,5	4,3	5	M4	20	6,5	-	2,9	53000	36000	504	0,135
07598-048301520	M30x1,5	48	-	40,5	4,3	5	M4	20	6,5	-	2,9	57000	38000	588	0,142
07598-050321522	M32x1,5	50	-	42,5	4,3	5	M4	22	7	-	2,9	64000	44000	743	0,164
07598-053351522	M35x1,5	53	-	45,5	4,3	5	M4	22	7	-	2,9	66000	47000	914	0,178

Fork Pieces

with threaded bolt



Material:
Tempered steel 1.1191

Surface finish:
Heat-treated and black oxide finish

Sample order:
nlm 07620-05

Note:
Suitable Hinge Pin, see 04250.

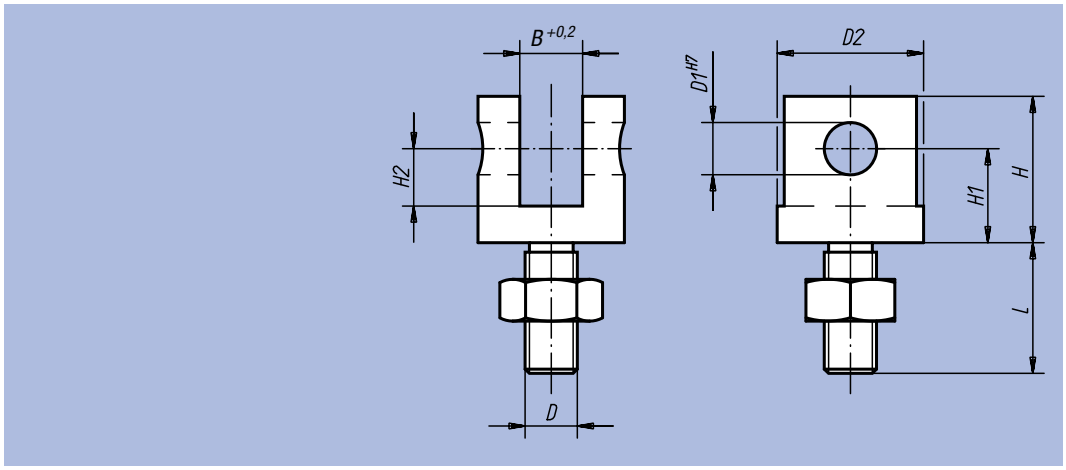

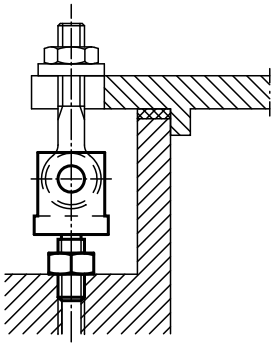

Order No.	D	D1	D2	B	H	H1	H2	L	g
07620-05	M5	5	12	6	16	10	7	14,5	8,5
07620-06	M6	6	16	7	19	12	8	15	14,0
07620-08	M8	8	20	9	23	15	10	20	20,0
07620-10	M10	10	28	12	28	18	11	25	35,0
07620-12	M12	12	30	14	34	21	13,5	30	70,0
07620-14	M14	14	36	16	37	23	15	35	84,0
07620-16	M16	16	40	17	42	26	17	40	140,0
07620-20	M20	18	50	22	52	32	21	50	160,0

Notes:

Grub screws

DIN 551



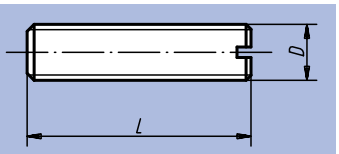

Material:
Steel

Surface finish:
Natural finish, quality class 5.8

Sample order:
nlm 07630-10X40
(Please also indicate dimension L)

Note:
A solid joint between grub screw and counter-piece can often be made more cost-effectivelly by gluing it.
The LOCTITE products are especially suitable for this. See 97990.

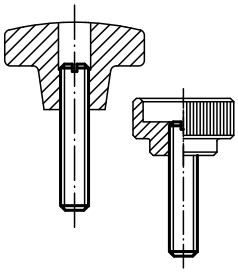

Order No.	D	L
07630-06X	M6	20 / 25 / 30 / 35 / 40 / 45 / 50 / 60 / 70
07630-08X	M8	25 / 30 / 35 / 40 / 45 / 50 / 60 / 70 / 80
07630-10X	M10	25 / 30 / 35 / 40 / 45 / 50 / 60 / 70 / 80
07630-12X	M12	30 / 35 / 40 / 45 / 50 / 60 / 70 / 80 / 100
07630-16X	M16	30 / 35 / 40 / 45 / 50 / 60 / 70 / 80 / 100
07630-20X	M20	40 / 50 / 60 / 70 / 80 / 90 / 100

Grub screws

in steel and stainless steel to DIN 976-1



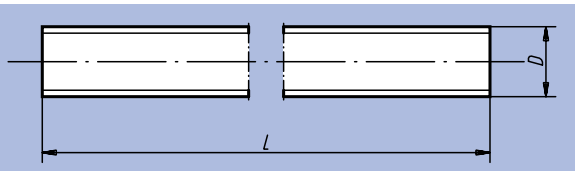

Material:
Tempered steel or stainless steel

Surface finish:
Heat-treated class 8.8

Sample order:
nlm 07640-16

Note:
Grub screws are only available in length 1000 mm.

Order No. Material steel	Order No. Material stainless steel	D	L	kg
07640-05	07640-052	M5	1000	0,120
07640-06	07640-062	M6	1000	0,165
07640-08	07640-082	M8	1000	0,310
07640-10	07640-102	M10	1000	0,490
07640-12	07640-122	M12	1000	0,700
07640-14	-	M14	1000	0,975
07640-16	07640-162	M16	1000	1,300
07640-18	07640-182	M18	1000	1,600
07640-20	07640-202	M20	1000	2,030
07640-22	07640-222	M22	1000	2,515
07640-24	07640-242	M24	1000	2,965

Springs

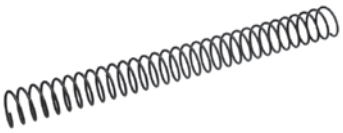

Material:
Spring steel 1.5026

Sample order:
nlm 07650-12

Note:
Springs are only available in 400 mm long versions.

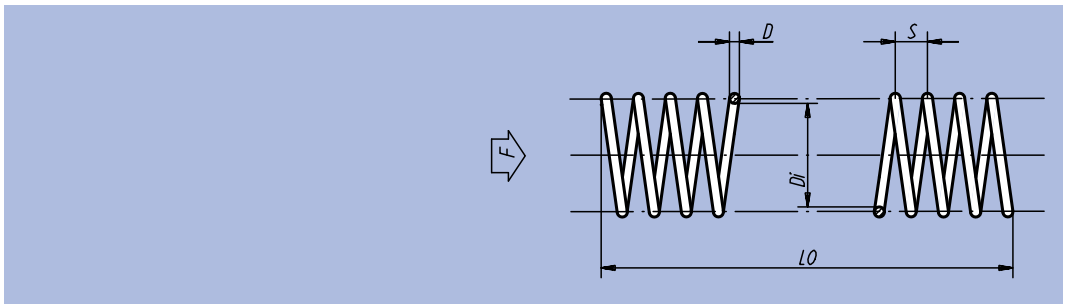

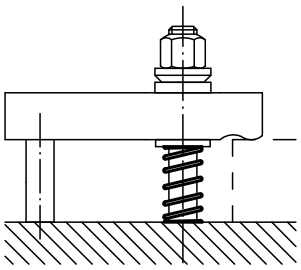

Order No.	D	Di	LO	S	Spring force F approx. N	Compression factor under f	□ kg
07650-06	1	6,5	400	3	32	1,3	0,020
07650-08	1	8,5	400	4	25	2,1	0,020
07650-10	1,2	10,5	400	4	35	2,7	0,035
07650-12	1,4	12,5	400	5	47	3,3	0,035
07650-14	1,5	14,5	400	6	50	4,0	0,050
07650-16	1,6	16,5	400	7	53	4,8	0,065
07650-18	1,8	18,5	400	7	68	5,4	0,075
07650-20	1,8	20,5	400	8	62	6,5	0,090
07650-24	2	25	400	9	70	8,6	0,120

Notes:

HeliCoil®plus Threaded Inserts

Material:
Rust and acid-resistant chromiun-nickel alloy 1.4301

Surface finish:
Natural finish

Sample order:
nlm 07645-01 (assortment box)

Note:
HeliCoil®plus threaded inserts are an indispensable aid to any metalworking business and restoration shop. Threaded holes that are torn out, rusted solid or have been drilled too big, can have their original intearnal thread diameter restored in minutes. Technically perfect and lasting for an unlimited time, they are also corrosion and heat-resistant. It is even possible to recycle expensive products thrown away.
As a result of the high surface quality an optimum limit of elasticity and high pre-tensioning of high tensile bolts is guaranteed.
HeliCoil®plus threaded inserts are also ideally suited for movable threads in all light-alloy and cast parts. Instructions for installation and thread are enclosed in the assortment box. Additional dimensions, of installation tools as well, available on request.

Assortment Box
Assortment box consisting of M5 to M12 threaded inserts, each in three different thread lengths, spiral drills (only for M5 - M10 inserts), special hand-operated tapping drills, spindle inserts and pin breakers.

Repair Kits
Consisting of threaded inserts of one size, each in three different thread lengths, spiral drills, special hand-operated tapping drills, spindle inserts and pin breakers.



assortment box



repair kits



spare threaded inserts, loose

Order No.	Surface finish	Threads included in product range	Number of Threaded Inserts pieces	Length of inserts in the assembled state mm
07645-01	assortment box	M5	10	5 / 7,5 / 10
		M6	10	6 / 9 / 12
		M8	10	8 / 12 / 16
		M10	10	10 / 15 / 20
		M12	10	12 / 18 / 24

Order No.	Surface finish	Threaded Inserts	Number of Threaded Inserts pieces	Length of inserts in the assembled state mm
07645-0523	repair kits	M5	each length 20	5 / 7,5 / 10
07645-0623	repair kits	M6	each length 20	6 / 9 / 12
07645-0823	repair kits	M8	each length 10	8 / 12 / 16
07645-1023	repair kits	M10	each length 10	10 / 15 / 20
07645-1223	repair kits	M12	each length 10	12 / 18 / 24

Order No.	Surface finish	Threaded Inserts	Length of inserts in the assembled state mm
07645-0521	spare threaded inserts, loose	M5	5
07645-0531	spare threaded inserts, loose	M5	7,5
07645-0541	spare threaded inserts, loose	M5	10
07645-0621	spare threaded inserts, loose	M6	6
07645-0631	spare threaded inserts, loose	M6	9
07645-0641	spare threaded inserts, loose	M6	12
07645-0821	spare threaded inserts, loose	M8	8
07645-0831	spare threaded inserts, loose	M8	12
07645-0841	spare threaded inserts, loose	M8	16
07645-1021	spare threaded inserts, loose	M10	10
07645-1031	spare threaded inserts, loose	M10	15
07645-1041	spare threaded inserts, loose	M10	20
07645-1221	spare threaded inserts, loose	M12	12
07645-1231	spare threaded inserts, loose	M12	18
07645-1241	spare threaded inserts, loose	M12	24

previously



subsequently



Threaded Inserts



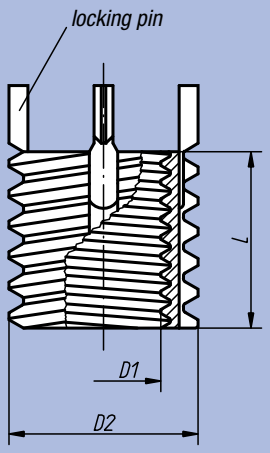

Material, surface finish:
Threaded insert in steel or stainless steel, passivated

Sample order:
nlm Threaded Insert 07660-12
nlm Assembly tool 07660-812

Note:
Threaded Inserts allow threaded holes which have been damaged, torn out or jammed to be used again or repaired. This makes it possible to recover scrap and rejects of expensive products. Threaded Inserts are suitable for use in various materials, including light metals and casting.
Inserts with internal threads larger than M6 are supplied with four locking pins instead of two.
Permissible deviations:
the medium tolerance class applies to the threads listed, i.e. 6H for nut threads and 6g for bolt threads. Other dimensions ±0.25 mm.

Technical Information see operating instructions for threaded inserts.

Benefits:
- Quick and easy installation.
- The insert is fixed with pins in order to prevent torsion due to twisting or vibrations.
- No other special tools are needed besides the assembly tool.

Order No. Material steel	Order No. Material stainless steel	Internal thread D1	External thread D2	Length L	Installation drill Ø	Installation countersunk Ø +0,25	Installation screw tab	Installation Min. thread depth	Removal drill Ø	Removal drilling depth	Order No. Assembly tool
07660-05	**07660-105**	M5	M8	8	6,9	8,3	M8	9,5	5,5	4	07660-805
07660-06	**07660-106**	M6	M10x1,25	10	8,8	10,3	M10x1,25	11,5	7,5	4,8	07660-806
07660-08	**07660-108**	M8	M12x1,25	12	10,8	12,3	M12x1,25	13,5	9,5	4,8	07660-808
07660-08X1	**07660-108X1**	M8x1	M12x1,25	12	10,8	12,3	M12x1,25	13,5	9,5	4,8	07660-808
07660-10	**07660-110**	M10	M14x1,5	14	12,8	14,3	M14x1,5	15,5	11,5	4,8	07660-810
07660-10X125	**07660-110X125**	M10x1,25	M14x1,5	14	12,8	14,3	M14x1,5	15,5	11,5	4,8	07660-810
07660-12	**07660-112**	M12	M16x1,5	16	14,8	16,3	M16x1,5	17,5	13,5	4,8	07660-812
07660-12X125	**07660-112X125**	M12x1,25	M16x1,5	16	14,8	16,3	M16x1,5	17,5	13,5	4,8	07660-812

Reinforced Threaded Inserts



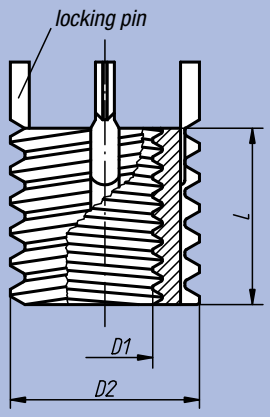

Material, surface finish:
Threaded insert in steel or stainless steel, passivated

Sample order:
nlm Reinforced Threaded Insert 07661-12
nlm Assembly tool 07661-812

Note:
Reinforced Threaded Inserts allow threaded holes which have been damaged, torn out or jammed to be used again or repaired. This makes it possible to recover scrap and rejects of expensive products.
Reinforced Threaded Inserts are suitable for use in various materials, including light metals and casting.
Inserts with internal threads larger than M6 are supplied with four locking pins instead of two.
Permissible deviations:
the medium tolerance class applies to the threads listed, i.e. 6H for nut threads and 6g for bolt threads. Other dimensions ±0.25 mm.

With Reinforced Threaded Inserts we also offer a version with a stronger cross-section for use in applications with greater stress.

Technical Information see operating instructions for threaded inserts.

Benefits:
- Quick and easy installation.
- The insert is fixed with pins in order to prevent torsion due to twisting or vibrations.
- No other special tools are needed besides the assembly tool.

Order No. Material steel	Order No. Material stainless steel	Internal thread D1	External thread D2	Length L	Installation drill Ø	Installation countersunk Ø +0,25	Installation screw tab	Installation Min. thread depth	Removal drill Ø	Removal drilling depth	Order No. Assembly tool
07661-04	07661-104	M4	M8	8	6,9	8,3	M8	9,5	5,5	4	07661-804
07661-05	07661-105	M5	M10x1,25	10	8,8	10,3	M10x1,25	12,5	7,5	4,8	07661-805
07661-06	07661-106	M6	M12x1,25	12	10,8	12,3	M12x1,25	14,5	9,5	4,8	07661-806
07661-08	07661-108	M8	M14x1,5	14	12,8	14,3	M14x1,5	16,5	11,5	4,8	07661-808
07661-08X1	07661-108X1	M8x1	M14x1,5	14	12,8	14,3	M14x1,5	16,5	11,5	4,8	07661-808
07661-10	07661-110	M10	M16x1,5	16	14,8	16,3	M16x1,5	18,5	13,5	4,8	07661-810
07661-10X125	07661-110X125	M10x1,25	M16x1,5	16	14,8	16,3	M16x1,5	18,5	13,5	4,8	07661-810
07661-12	07661-112	M12	M18x1,5	18	16,8	18,3	M18x1,5	20,5	15,5	4,8	07661-812
07661-12X125	07661-112X125	M12x1,25	M18x1,5	18	16,8	18,3	M18x1,5	20,5	15,5	4,8	07661-812
07661-14	07661-114	M14	M20x1,5	20	18,8	20,3	M20x1,5	22,5	17,5	4,8	07661-814
07661-14X15	07661-114X15	M14x1,5	M20x1,5	20	18,8	20,3	M20x1,5	22,5	17,5	4,8	07661-814
07661-16	07661-116	M16	M22x1,5	22	20,7	22,3	M22x1,5	24,5	17,8	6,4	07661-816
07661-16X15	07661-116X15	M16x1,5	M22x1,5	22	20,7	22,3	M22x1,5	24,5	17,8	6,4	07661-816
07661-18X15	07661-118X15	M18x1,5	M24x1,5	24	22,5	24,3	M24x1,5	26,5	19,8	6,4	07661-818
07661-20	07661-120	M20	M30x2	30	28	30,3	M30x2	34,5	25,8	6,4	07661-820
07661-20X15	07661-120X15	M20x1,5	M30x2	30	28	30,3	M30x2	34,5	25,8	6,4	07661-820
07661-22X15	07661-122X15	M22x1,5	M32x2	32	30	32,3	M32x2	36,5	27,8	6,4	07661-822
07661-24	07661-124	M24	M33x2	33	31	33,3	M33x2	37,5	28,8	6,4	07661-824
07661-24X2	07661-124X2	M24x2	M33x2	33	31	33,3	M33x2	37,5	28,8	6,4	07661-824

Solid Body Threaded Inserts



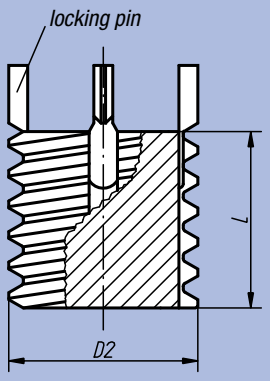

Material, surface finish:
Threaded insert in steel, passivated

Sample order:
nlm Solid Body Threaded Insert
07662-10X125
nlm Assembly tool 07662-810

Note:
Solid Body Threaded Inserts allow threaded holes which have been damaged, torn out or jammed to be used again or repaired. This makes it possible to recover scrap and rejects of expensive products.
Solid Body Threaded Inserts are suitable for use in various materials, including light metals and castings.
Permissible deviations:
the medium tolerance class applies to the threads listed, i.e. 6g for bolt threads.
Other dimensions ±0.25 mm.

Solid Body Threaded Inserts are used where threaded holes that have been drilled too large or drill hole spacings that have not been observed in workpieces need to be redone.

Technical Information see operating instructions for threaded inserts.

Benefits:
- Quick and easy installation.
- The insert is fixed with pins in order to prevent torsion due to twisting or vibrations.
- No other special tools are needed besides the assembly tool.

Order No.	Material	External thread D2	Length L	Installation drill Ø	Installation countersunk Ø +0,25	Installation screw tab	Installation Min. thread depth	Removal drill Ø	Removal drilling depth	Order No. Assembly tool
07662-08	steel	M8	8	6,9	8,3	M8	9,5	5,5	4	07662-808
07662-10X125	steel	M10x1,25	10	8,8	10,3	M10x1,25	12,5	7,5	4,8	07662-810
07662-12X125	steel	M12x1,25	12	10,8	12,3	M12x1,25	14,5	9,5	4,8	07662-812
07662-14X15	steel	M14x1,5	14	12,8	14,3	M14x1,5	16,5	11,5	4,8	07662-814
07662-16X15	steel	M16x1,5	16	14,8	16,3	M16x1,5	18,5	13,5	4,8	07662-816
07662-18X15	steel	M18x1,5	18	16,8	18,3	M18x1,5	20,5	15,5	4,8	07662-818
07662-20X15	steel	M20x1,5	20	18,8	20,3	M20x1,5	22,5	17,5	4,8	07662-820
07662-22X15	steel	M22x1,5	22	20,7	22,3	M22x1,5	24,5	17,8	6,4	07662-822
07662-24X15	steel	M24x1,5	24	22,5	24,3	M24x1,5	26,5	19,8	6,4	07662-824
07662-30X2	steel	M30x2	30	28	30,3	M30x2	34,5	25,8	6,4	07662-830

Threaded Inserts

with internal thread, self-locking



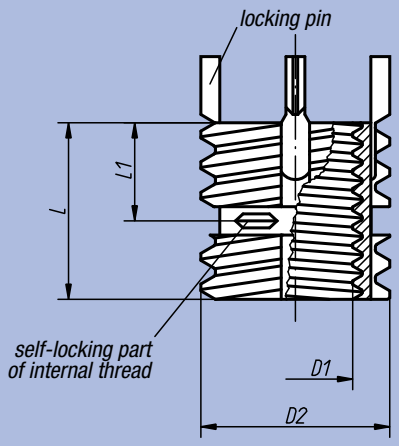

Material, surface finish:
Threaded insert in stainless steel, passivated

Sample order:
nlm Threaded Insert 07663-112
nlm Assembly tool 07660-812

Note:
Threaded Inserts allow threaded holes which have been damaged, torn out or jammed to be used again or repaired. This makes it possible to recover scrap and rejects of expensive products. Threaded Inserts are suitable for use in various materials, including light metals and casting.
Inserts with internal threads larger than M6 are supplied with four locking pins instead of two.
Permissible deviations:
the medium tolerance class applies to the threads listed, i.e. 6H for nut threads and 6g for bolt threads. Other dimensions ±0.25 mm.

Technical Information see operating instructions for threaded inserts.

Benefits:
- Quick and easy installation.
- The insert is fixed with pins in order to prevent torsion due to twisting or vibrations.
- No other special tools are needed besides the assembly tool.

Order No.	Material	Internal thread D1	External thread D2	Length L1	Length L	Installation drill Ø	Installation countersunk Ø +0,25	Installation screw tab	Installation Min. thread depth	Removal drill Ø	Removal drilling depth	Order No. Assembly tool
07663-105	stainless steel	M5	M8	4	8	6,9	8,3	M8	9,5	5,5	4	07660-805
07663-106	stainless steel	M6	M10x1,25	5	10	8,8	10,3	M10x1,25	11,5	7,5	4,8	07660-806
07663-108	stainless steel	M8	M12x1,25	6	12	10,8	12,3	M12x1,25	13,5	9,5	4,8	07660-808
07663-110	stainless steel	M10	M14x1,5	7	14	12,8	14,3	M14x1,5	15,5	11,5	4,8	07660-810
07663-112	stainless steel	M12	M16x1,5	8	16	14,8	16,3	M16x1,5	17,5	13,5	4,8	07660-812

Reinforced Threaded Inserts

with internal thread, self-locking



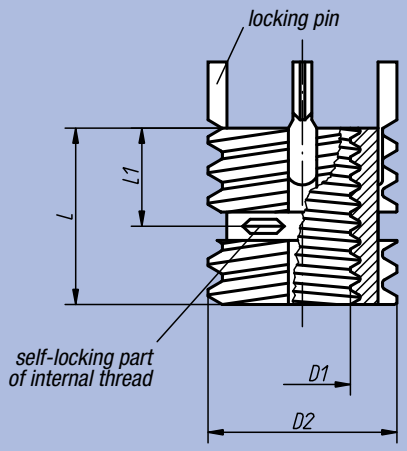

Material, surface finish:
Threaded insert in stainless steel, passivated

Sample order:
nlm Reinforced Threaded Insert 07664-110
nlm Assembly tool 07661-810

Note:
Reinforced Threaded Inserts allow threaded holes which have been damaged, torn out or jammed to be used again or repaired. This makes it possible to recover scrap and rejects of expensive products.
Reinforced Threaded Inserts are suitable for use in various materials, including light metals and casting.
Inserts with internal threads larger than M6 are supplied with four locking pins instead of two.
Permissible deviations: the medium tolerance class applies to the threads listed, i.e. 6H for nut threads and 6g for bolt threads.
Other dimensions ±0.25 mm.

Technical Information see operating instructions for threaded inserts.

Benefits:
- Quick and easy installation.
- The insert is fixed with pins in order to prevent torsion due to twisting or vibrations.
- No other special tools are needed besides the assembly tool.

Order No.	Material	Internal thread D1	External thread D2	Length L1	Length L	Installation drill Ø	Installation countersunk Ø +0,25	Installation screw tab	Installation Min. thread depth	Removal drill Ø	Removal drilling depth	Order No. Assembly tool
07664-104	stainless steel	M4	M8	4	8	6,9	8,3	M8	9,5	5,5	4	07661-804
07664-105	stainless steel	M5	M10x1,25	5	10	8,8	10,3	M10x1,25	12,5	7,5	4,8	07661-805
07664-106	stainless steel	M6	M12x1,25	6	12	10,8	12,3	M12x1,25	14,5	9,5	4,8	07661-806
07664-108	stainless steel	M8	M14x1,5	7	14	12,8	14,3	M14x1,5	16,5	11,5	4,8	07661-808
07664-110	stainless steel	M10	M16x1,5	8	16	14,8	16,3	M16x1,5	18,5	13,5	4,8	07661-810
07664-112	stainless steel	M12	M18x1,5	9	18	16,8	18,3	M18x1,5	20,5	15,5	4,8	07661-812
07664-114	stainless steel	M14	M20x1,5	10	20	18,8	20,3	M20x1,5	22,5	17,5	4,8	07661-814
07664-116	stainless steel	M16	M22x1,5	11	22	20,7	22,3	M22x1,5	24,5	17,8	6,4	07661-816
07664-116X15	stainless steel	M16x1,5	M22x1,5	11	22	20,7	22,3	M22x1,5	24,5	17,8	6,4	07661-816
07664-118X15	stainless steel	M18x1,5	M24x1,5	12	24	22,5	24,3	M24x1,5	26,5	19,8	6,4	07661-818
07664-120	stainless steel	M20	M30x2	15	30	28	30,3	M30x2	34,5	25,8	6,4	07661-820

Repair Kit

Material, surface finish:
Threaded insert in steel, passivated

Sample order:
nlm 07666-01

Note:
Repair Kit allows threaded holes which have been damaged, torn out or jammed to be used again or repaired. This makes it possible to recover scrap and rejects of expensive products. Threaded Inserts are suitable for use in various materials, including light metals and casting.
Inserts with internal threads larger than M6 are supplied with four locking pins instead of two.
Permissible deviations:
the medium tolerance class applies to the threads listed, i.e. 6H for nut threads and 6g for bolt threads. Other dimensions ±0.25 mm.

Technical Information see operating instructions for threaded inserts.

Benefits:
- Quick and easy installation.
- The insert is fixed with pins in order to prevent torsion due to twisting or vibrations.
- No other special tools are needed besides the assembly tool.



Order No.	Threaded inserts supplied internal thread	Threaded inserts supplied external thread	Length of inserts	Number of inserts	Number of assembly tool	Order No. Threaded insert
07666-01	M5	M8	8	8	1	07660-05
	M6	M10x1,25	10	8	1	07660-06
	M8	M12x1,25	12	6	1	07660-08
	M8x1	M12x1,25	12	6	1	07660-08X1
	M10	M14x1,5	14	4	1	07660-10
	M10x1,25	M14x1,5	14	4	1	07660-10X125
	M12	M16x1,5	16	3	1	07660-12
	M12x1,25	M16x1,5	16	3	1	07660-12X125

Operating Instructions for Threaded Inserts

Mounting instructions

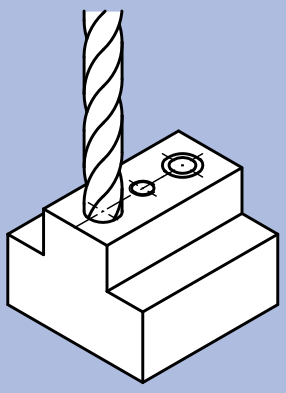

1.*
Rebore the old thread and countersink it (82° – 100°)

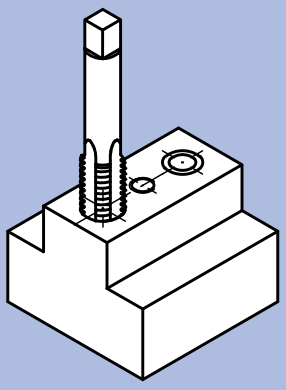

2.*
Tap planned thread with a standard screw tap

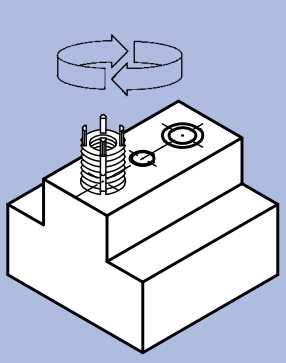

3.
Screw in the insert to just below the surface (0.3 – 0.7 mm)

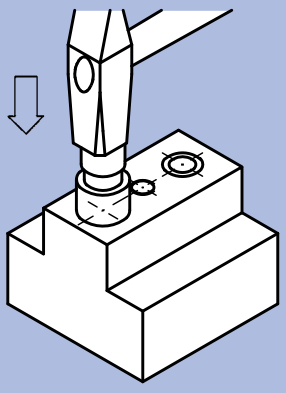

4.
Drive in the locking pins by striking the assembly tool lightly with a hammer

* For steps 1 and 2
see table under installation of threaded inserts

Demounting instructions

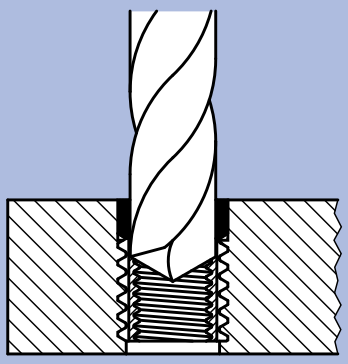

1.*
Rebore the material between the locking pins and the internal thread to the specified depth

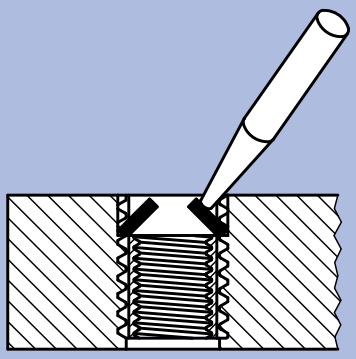

2.
Bend the locking pins inwards and break them off

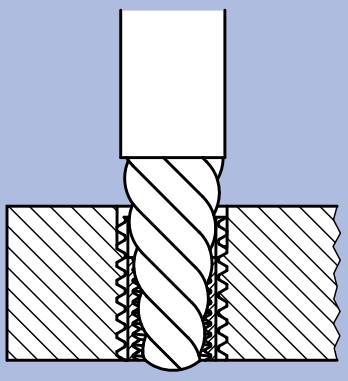

3.
Remove the old insert with a screw extractor

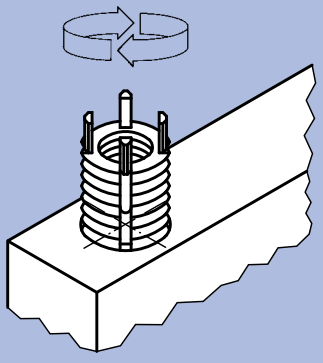

4.
Install a new threaded insert in the original threaded hole

* For step 1
see table under removal of threaded inserts

Grub Screws

with screw-in stop for gluing



Material:
Steel or stainless steel 1.4305

Surface finish:
Steel blue chromated, stainless steel natural finish

Sample order:
nlm 07670-1040201

Note:
These products have been designed especially so that grub screws can be glued up to the screw-in stop. They allow mechanical connecting elements with external thread to be made cost-effectively for small and medium-sized series.
The LOCTITE products 638 and 648 (see 97990) have proven themselves in practice as a successful bonding agent.

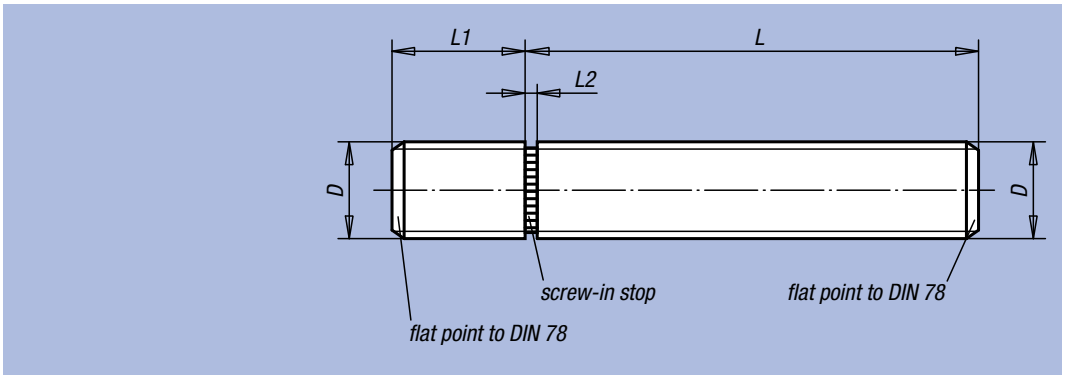

Order No. Material steel	Order No. Material stainless steel	D	L	L1	L2	kg
07670-1040201	07670-1040202	M4	20	6	1	0,002
07670-1040301	07670-1040302	M4	30	6	1	0,003
07670-1040401	07670-1040402	M4	40	6	1	0,004
07670-1040501	07670-1040502	M4	50	6	1	0,005
07670-1050201	07670-1050202	M5	20	8	1	0,003
07670-1050301	07670-1050302	M5	30	8	1	0,004
07670-1050401	07670-1050402	M5	40	8	1	0,006
07670-1050501	07670-1050502	M5	50	8	1	0,007
07670-1050601	07670-1050602	M5	60	8	1	0,008
07670-1060201	07670-1060202	M6	20	9	1,5	0,004
07670-1060301	07670-1060302	M6	30	9	1,5	0,007
07670-1060401	07670-1060402	M6	40	9	1,5	0,008
07670-1060501	07670-1060502	M6	50	9	1,5	0,009
07670-1060601	07670-1060602	M6	60	9	1,5	0,011
07670-1080201	07670-1080202	M8	20	12	1,5	0,009
07670-1080301	07670-1080302	M8	30	12	1,5	0,012
07670-1080401	07670-1080402	M8	40	12	1,5	0,015
07670-1080501	07670-1080502	M8	50	12	1,5	0,018
07670-1080601	07670-1080602	M8	60	12	1,5	0,022
07670-1080801	07670-1080802	M8	80	12	1,5	0,027
07670-1100201	07670-1100202	M10	20	14	2	0,014
07670-1100301	07670-1100302	M10	30	14	2	0,019
07670-1100401	07670-1100402	M10	40	14	2	0,024
07670-1100501	07670-1100502	M10	50	14	2	0,029
07670-1100601	07670-1100602	M10	60	14	2	0,034
07670-1100801	07670-1100802	M10	80	14	2	0,044
07670-1120301	07670-1120302	M12	30	17	2	0,031
07670-1120401	07670-1120402	M12	40	17	2	0,038
07670-1120501	07670-1120502	M12	50	17	2	0,045
07670-1120601	07670-1120602	M12	60	17	2	0,053
07670-1120801	07670-1120802	M12	80	17	2	0,067
07670-1160301	07670-1160302	M16	30	22	2	0,064
07670-1160401	07670-1160402	M16	40	22	2	0,078
07670-1160501	07670-1160502	M16	50	22	2	0,092
07670-1160601	07670-1160602	M16	60	22	2	0,105
07670-1160801	07670-1160802	M16	80	22	2	0,132

Technical Information for Grub Screws with screw-in stop

These products have been designed especially so that grub screws can be glued up to the screw-in stop. They allow mechanical connecting elements with external thread to be made cost-effectively for small and medium-sized series.

Benefits:

– Defined screw-in length due to the screw-in stop.
– Screwing in against the screw-in stop achieves an optimal bonding gap and hence a permanently safe bond that has been proven a thousandfold.
– Easy and low-cost connection.
– The operating part product line can be quickly and easily supplemented by other external thread variations.

The Loctite products 638 and 648 have proven themselves in practice as a successful bonding agent.



Notes:

Lifting Eye Bolts male

similar to DIN 580



Material:
Hardened steel 1.0401 or stainless steel (1.4301)

Surface finish:
Formed blank

Sample order:
nlm 07680-20

Note:
These Lifting Eye Bolts male are suitable for cordons, fences, little clamping tasks and similar applications. They must not be used for security-relevant applications.

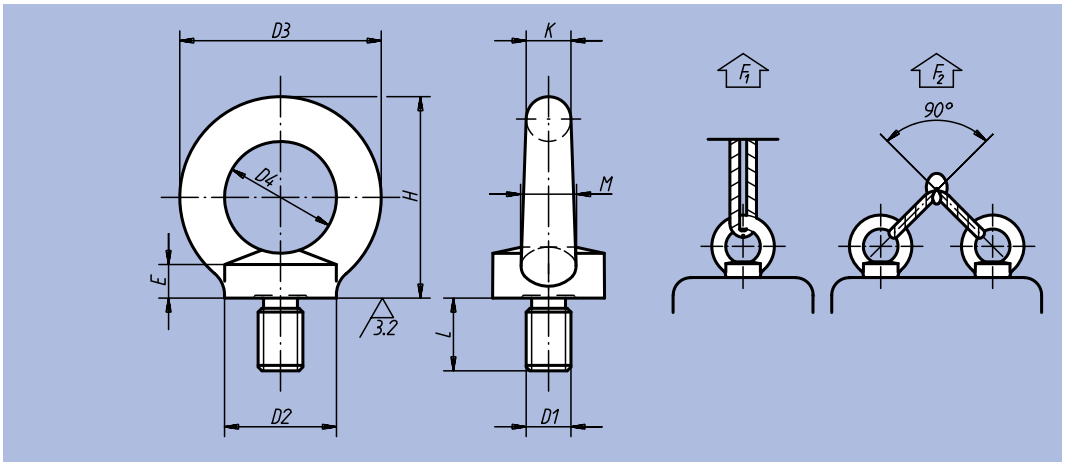

Order No. Material steel	Order No. Material stainless steel	D1	L	D2	D3	D4	E	H	K	M	F1 max. kN	F2 max. kN	kg
07680-08	07680-108	M8	13	20	36	20	6	36	8	10	1,4	0,95	0,050
07680-10	07680-110	M10	17	25	45	25	8	45	10	12	2,3	1,7	0,110
07680-12	07680-112	M12	20,5	30	54	30	10	53	12	14	3,4	2,4	0,190
07680-16	07680-116	M16	27	35	63	35	12	62	14	16	7	5	0,300
07680-20	-	M20	30	40	72	40	14	71	16	19	12	8,3	0,470
07680-24	-	M24	36	50	90	50	18	90	20	24	18	12,7	0,950

Lifting Eye Bolts female

similar to DIN 582



Material:
Hardened steel 1.0401 or stainless steel 1.4301

Surface finish:
Formed blank

Sample order:
nlm 07690-10

Note:
These Lifting Eye Bolts female are suitable for cordons, fences, little clamping tasks and similar applications. They must not be used for security-relevant applications.

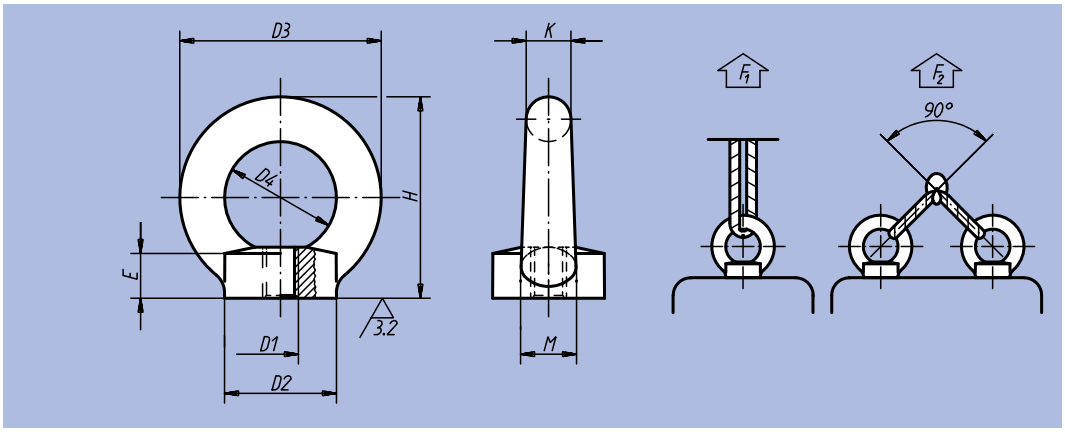

Order No. Material steel	Order No. Material stainless steel	D1	D2	D3	D4	E	H	K	M	F1 max. kN	F2 max. kN	kg
07690-08	07690-108	M8	20	36	20	8,5	36	8	10	1,4	0,95	0,050
07690-10	07690-110	M10	25	45	25	10	45	10	12	2,3	1,7	0,100
07690-12	07690-112	M12	30	54	30	11	53	12	14	3,4	2,4	0,180
07690-16	07690-116	M16	35	63	35	13	62	14	16	7	5	0,270
07690-20	07690-120	M20	40	72	40	16	71	16	19	12	8,3	0,400
07690-24	-	M24	50	90	50	20	90	20	24	18	12,7	0,700

Revolving Lifting Eye Bolts male

high-strength



Material:
Ring in steel 1.6541;
screw in steel

Surface finish:
Ring is forged and high-strength heat-treated. 100% electromagnetic crack testing in accordance with EN 1677-4, quadruple safety. Plastic-coated, red. Screw quality class 10.9.

Sample order:
nlm 07695-08150

Note:
In contrast to lifting eye bolts per DIN 580, the ring is rotary seated; therefore the direction of force is adjustable and unintended under-tightening or over-tightening is precluded. The higher load rating than for lifting eye bolts per DIN 580 makes it possible to use smaller fixing thread. The special hexagon socket screw is loss-proof.

– can rotate 360°
– quadruple safety
– lateral stop up to 90° is possible
– ring body can rotate 360° with tightened screw

The listed load values apply for a minimum screw length of 1x nominal thread diameter in steel with a minimum tensile strength of 37 kp/mm², at an application temperature of -20 °C to +100 °C.

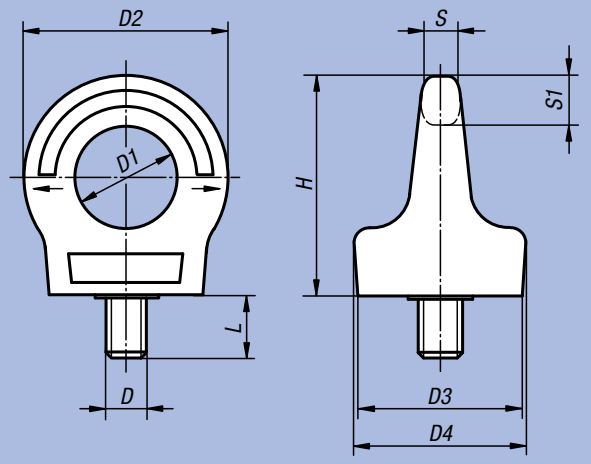

Maximum transport weight "G" in kg for different stop types

Kind of attachment	G	G	G	G	G		G	
Number of pieces	1	2	1	2	2	2	3 - 4	3 - 4
Inclination angle ∢	0°	0°	90°	90°	0°-45°	45°-60°	0°-45°	45°-60°
M8	1000	2000	400	800	560	400	840	600
M10	1000	2000	400	800	560	400	840	600
M12	2000	4000	750	1500	1000	750	1600	1120
M16	4000	8000	1500	3000	2000	1500	3150	2250
M20	6000	12000	2300	4600	3220	2300	4830	3450
M24	8000	16000	3200	6400	4480	3200	6700	4800
M30	12000	24000	4500	9000	6300	4500	9400	6700

Order No. Surface finish without hexagon wrench	Order No. Surface finish with hexagon wrench	D	D1	D2	D3	D4	H	L	S	S1	Permissible load kg
07695-08150	07695-08151	M8	25	49	32	34	52,5	15	8,5	12	400
07695-10150	07695-10151	M10	25	49	32	34	52,5	15	8,5	12	400
07695-12180	07695-12181	M12	30	58	44	46	62,4	18	8,5	14	750
07695-16240	07695-16241	M16	35	67	56	60	71,5	24	15	16	1500
07695-20300	07695-20301	M20	40	76	58	60	79,9	30	17	18	2300
07695-24360	07695-24361	M24	48	94	73	76	96,9	36	20	23	3200
07695-30450	07695-30451	M30	60	114	80	84	123,9	45	28	27	4500

Revolving Attachment-Swivel 360°

quality class 8



Material:
Steel

Surface finish:
Quality class 8, ball bearing;
red plastic-coated

Sample order:
nlm 07710-10180300

Note:
Compact and light design, fully loadable on all sides. Quadruple safety against rupture in all load directions. Can rotate 360°. Maximum swivel range of the element of 180°. Because of the ball-bearings, the eye bolt can rotate even under load.

Rotary eye bolts have applications in many fields, whether for lifting loads or for securing the loading.

For the carrying capacities to be valid, the ring must always be in line with the load to be carried. The eye bolt must lie flat on the support surface and always be screwed in completely.

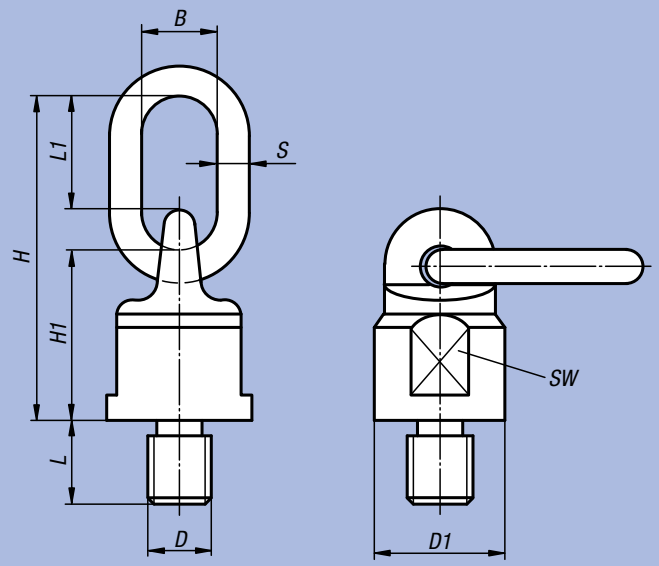

Maximum transport weight "G" in kg for different stop types

Kind of attachment				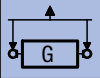	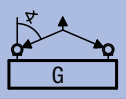		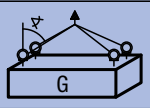	
Number of pieces	1	2	1	2	2	2	3 - 4	3 - 4
Inclination angle ∢	0°	0°	90°	90°	0°-45°	45°-60°	0°-45°	45°-60°
M10	600	1200	300	600	420	300	630	450
M12	1000	2000	500	1000	750	500	1100	750
M16	2000	4000	1120	2000	1500	1120	2360	1600
M20	4000	8000	2000	4000	2800	2000	4000	3000
M24	6300	12500	3150	6300	4250	3150	6300	4750

Order No.	B	D	D1	H	H1	L	L1	S	SW	Permissible load kg	kg
07710-1018	30	M10	38	105	50	18	46	13	30	300	0,480
07710-1218	30	M12	38	105	50	18	46	13	30	500	0,500
07710-1620	30	M16	38	105	50	20	46	13	30	1120	0,530
07710-2030	34	M20	50	131	61	30	57	16	40	2000	1,050
07710-2430	40	M24	58	153	68	30	70	19	48	3150	1,630
07710-3035	50	M30	75	165	80	35	65	20	65	5300	2,230
07710-3654	50	M36	85	205	95	54	90	22	75	8000	4,720

Weldable Attachment-Points



Material:
Eye, steel type 1.6541;
welding block, steel type S355JR

Surface finish:
Eye forged high-strength heat-treated, plastic-coated, red;
welding block forged, high-strength heat-treated, natural finish

Sample order:
nlm 07720-1000

Note:
Stop points for welding allow fast assembly.

They offer a compact design and can be loaded on all sides with quadruple safety against rupture.

The welding block is forged from the easily weldable material S355JR (St 52-3). The spacer knobs serve as a measure for the space required for root welding (approx. 3 mm).
The load data in the table is clearly and legibly marked on the welding block. It applies to the least favourable load case of the loads listed alongside it.

Welding must be done by a welder certified under EN 287-1.

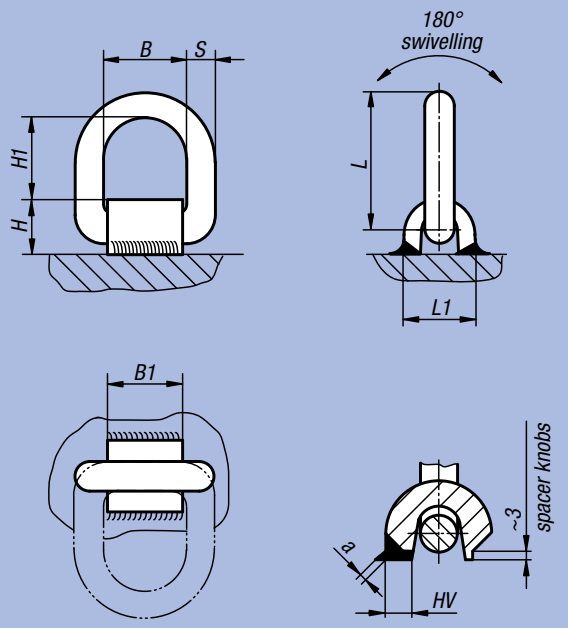

Maximum transport weight "G" in kg for different stop types

Kind of attachment	G	G	G	G	G	G	G	G
Number of pieces	1	2	1	2	2	2	3 - 4	3 - 4
Inclination angle ∢	0°	0°	90°	90°	0°-45°	45°-60°	0°-45°	45°-60°
07720-1000	1600	3200	1120	2240	1500	1120	2360	1600
07720-2000	3000	6000	2000	4000	2800	2000	4000	3000
07720-3000	4750	9500	3150	6300	4250	3150	6300	4750
07720-5000	8000	16000	5300	10600	7100	5300	11200	8000

Order No.	B	B1	H	H1	L	L1	S	Weld	Permissible load kg	kg
07720-1000	40	38	32	40	73	38	13	HV 5 + a3	1120	0,400
07720-2000	41	38	32	45	81	40	13	HV 5 + a3	2000	0,400
07720-3000	45	43	38	45	87	42	17	HV 8 + a3	3150	0,700
07720-5000	55	50	48	57	108	60	22	HV 12 + a4	5300	1,500

Lifting Eye Bolts



Material:
Tempered steel

Surface finish:
Black oxide finish

Sample order:
nlm 07730-10

Note:
Each Lifting Eye Bolt undergoes visual inspection after load testing (safety factor 1.5).
Each Lifting Eye Bolt is supplied wih a technical safety data sheet for installation.
Do not use spacer washers between the bushing flange and support surface.
Fasten the screws to the stated torque. Check and tighten the screws regularly. After assembly, check if the clevis turns freely in all directions.
Lift with care! Avoid impacts!
In no event must the permissible load stamped on the Lifting Eye Bolt be exceeded.

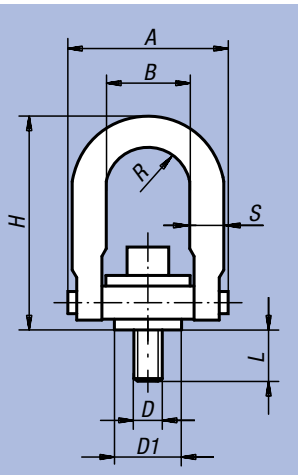



Important! Never use excessively large slings or other systems, as they could open the eye or lead to the opening of the U bow.

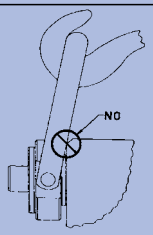

Check that the eye turns/swivels freely in all directions.

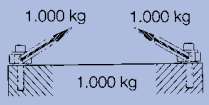

Avoid excessively sharp angles. To sling a load weighing 1000 kg atached in two locations with a 30° angle, each suspension must be capable of taking a load of 1000 kg.

Order No.	Surface finish	D	D1	A	B	H	L	R	S	max. permissible load kg	Tightening torque Nm	kg
07730-08	standard	M8	19	46,7	22	67,8	12,5	10,9	9,7	400	9,81	0,153
07730-10	standard	M10	19	46,7	22	67,8	17,5	10,9	9,7	450	16,7	0,162
07730-12	standard	M12	38,1	89,4	46	121,4	19	22,4	19	1050	37,3	1,057
07730-16	standard	M16	38,1	89,4	46	121,4	29	22,4	19	1900	80,4	1,103
07730-201	standard	M20	47,44	89,4	46	121,4	34	22,4	19	2150	133	3,112
07730-20	standard	M20	58,7	130,6	70	165,6	32	35,6	25,4	3000	133	3,112
07730-24	standard	M24	58,7	130,6	70	165,6	37	35,6	25,4	4200	304	3,203
07730-30	standard	M30	81	165,1	90	221,7	46	44,5	31,7	7000	588	6,300
07730-36	standard	M36	106,4	217,2	115	316,7	68	57,2	44,4	11000	981	15,500
07730-42	standard	M42	106,4	217,2	115	316,7	68	57,2	44,4	12500	981	16,000
07730-48	standard	M48	106,4	217,2	115	316,7	88	57,2	44,4	13500	981	16,800
07730-112	long	M12	38,1	89,4	46	170,7	19	22,4	19	1050	37,3	-
07730-116	long	M16	38,1	89,4	46	170,7	29	22,4	19	1900	80,4	-
07730-1201	long	M20	38,1	89,4	46	170,7	34	22,4	19	2150	133	-
07730-120	long	M20	58,7	130,6	70	206	32	35,6	25,4	3000	133	-
07730-124	long	M24	58,7	130,6	70	206	37	35,6	25,4	4200	304	-

nlm 07735

Lifting Eye Bolts with Envirolox®-protective finish



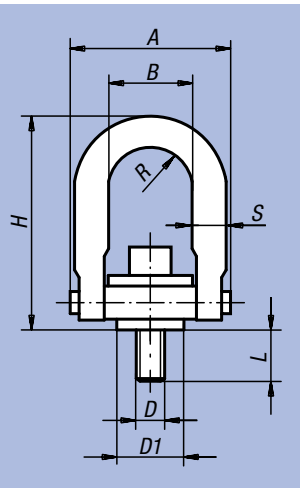

Material:
Tempered steel

Surface finish:
Lifting Eye Bolt with Envirolox®-protective finish; washer chromated

Sample order:
nlm 07735-10

Note:
Each Lifting Eye Bolt undergoes visual inspection after load testing (safety factor 2).
The new Envirolox®-protective finish is environmentally friendly and is proven to be effective in extreme conditions.
Possible application areas: in corrosive atmospheres such as maritime freight, chemical industry etc.

Safety instructions see 07730.

Order No.	A	B	D	D1	H	L	R	S	max. permissible load kg	Tightening torque Nm	kg
07735-08	46,7	22	M8	19	67,8	12,5	10,9	9,7	400	9,81	0,153
07735-10	46,7	22	M10	19	67,8	17,5	10,9	9,7	450	16,7	0,162
07735-12	89,4	46	M12	38,1	121,4	19	22,4	19	1050	37,3	1,057
07735-16	89,4	46	M16	38,1	121,4	29	22,4	19	1900	80,4	1,103
07735-20	89,4	46	M20	38,1	121,4	34	22,4	19	2150	133	3,112
07735-120	130,6	70	M20	58,7	165,6	32	35,6	25,4	3000	133	3,112
07735-24	130,6	70	M24	58,7	165,6	37	35,6	25,4	4200	304	3,203
07735-30	165,1	90	M30	81	221,7	46	44,5	31,7	7000	588	6,300

nlm 07750

Side Pull Rings



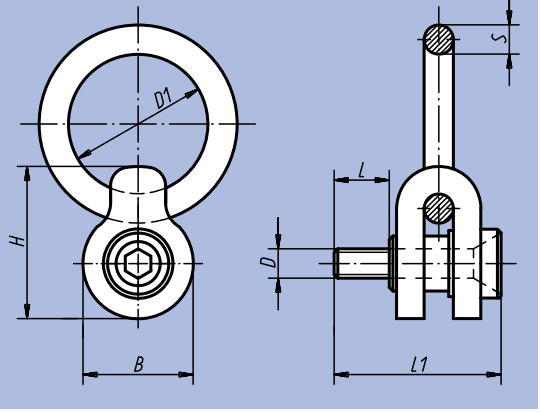

Material:
Tempered steel

Surface finish:
Black oxide finish

Sample order:
nlm 07750-10

Note:
Each Side Pull Ring undergoes visual inspection after load testing (safety factor 1.5).
Each Side Pull Ring is supplied wih a technical safety data sheet for installation.
Do not use spacer washers between the bushing flange and support surface.
Fasten the screws to the stated torque. Check and tighten the screws regularly. After assembly, check if the ring turns freely in all directions.
Lift with care! Avoid impacts!
In no event must the permissible load stamped on the Side Pull Ring be exceeded.

Order No.	D	D1	B	H	L	L1	S	max. permissible load kg	Tightening torque Nm	kg
07750-08	M8	50,5	38	51	16	61	9,5	325	4,21	0,120
07750-10	M10	50,5	38	51	20	63	9,5	500	5,88	0,120
07750-12	M12	76	60	81	24	85	16	725	19,61	1,461
07750-16	M16	76	60	81	31	94	16	1400	34,32	1,483
07750-20	M20	101,5	95	125,5	40	133	25,5	2290	68,65	5,240
07750-24	M24	101,5	95	125,5	47	147	25,5	3050	122,6	5,280

Side Swivel



Material:
Tempered steel

Surface finish:
Black oxide finish

Sample order:
nlm 07752-12

Note:
Each Side Swivel undergoes visual inspection after load testing (safety factor 5).
Each Side Swivel is supplied wih a technical safety data sheet for installation.
Do not use spacer washers between the bushing flange and support surface.
Fasten the screws to the stated torque. Check and tighten the screws regularly. After assembly, check if the clevis turns freely in all directions.
Lift with care! Avoid impacts!
In no event must the permissible load stamped on the Side Swivel be exceeded.

07752-08
07752-10

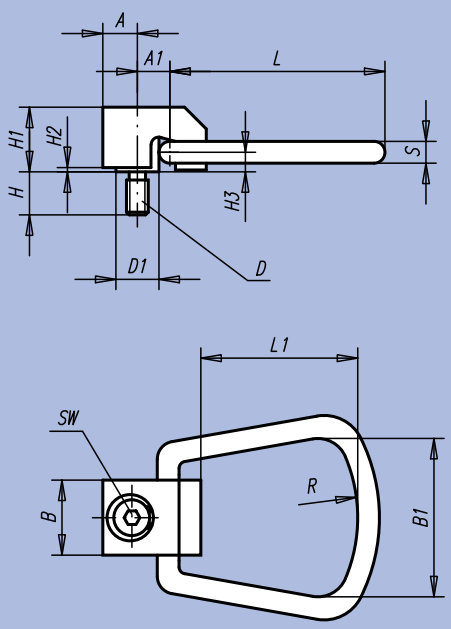

07752-12 to
07752-20

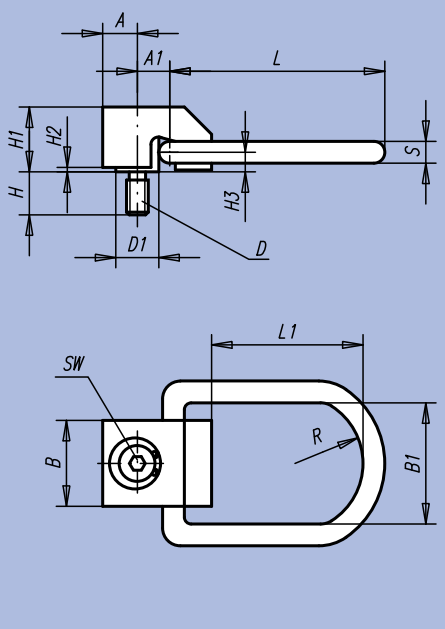

Order No.	A	A1	B	B1	D	D1	H	H1	H2	H3	L	L1	R	S	SW	Tightening torque Nm	max. permissible load kg
07752-08	12,7	12,7	25,4	44,5	M8	15,8	15,8	23,8	1,6	7,2	75,4	52,4	25,4	7,9	6	4,2	325
07752-10	12,7	12,7	25,4	44,5	M10	15,8	19,8	23,8	1,6	7,2	75,4	52,4	25,4	7,9	6	6	500
07752-12	19,8	23,8	41,3	50,8	M12	25,4	23,8	40,1	2	11,1	120,7	82,6	38,1	12,7	10	20	725
07752-16	19,8	23,8	41,3	50,8	M16	25,4	31,8	40,1	2	11,1	120,7	82,6	38,1	12,7	10	40	1400
07752-20	19,8	23,8	41,3	50,8	M20	25,4	39,7	40,1	2	11,1	120,7	82,6	38,1	12,7	10	70	2290

Swivel Eye Bolts



Material:
Tempered steel or stainless steel

Surface finish:
Steel black oxide finish, stainless steel natural finish

Sample order:
nlm Swivel Eye Bolt 07770-10
nlm Assembly key 07770-101

Note Swivel Eye Bolts:
Do not use spacer washers between the bushing flange and support surface.
Keep to the permissible counterbore diameter (D2) of the threaded protective hole.
Fasten the screws to the stated torque.
Check and tighten the screws regularly. After assembly, check if the clevis turns freely in all directions.
Lift with care! Avoid impacts!
In no event must the permissible load stamped on the Swivel Eye Bolts be exceeded.
Safety data sheet available at extra cost.

Note Assembly key:
- Insert the assembly key in the existing holes in the Swivel Eye Bolt.
- Tighten the Swivel Eye Bolt to the recommended torque using a torque spanner.
- Keep to the permissible counterbore diameter of the threaded protective hole.

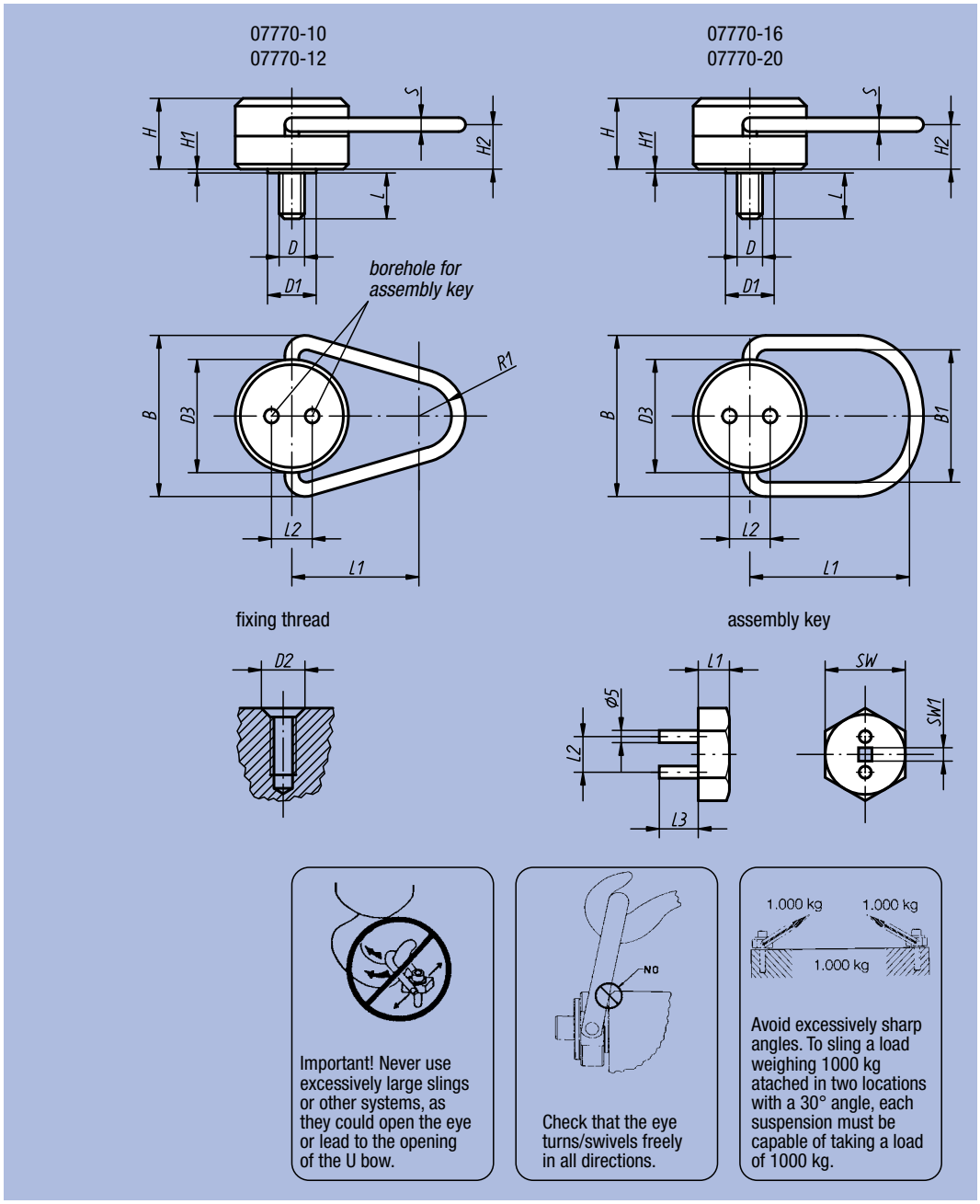

Order No. Swivel eye bolt	Material	B	B1	D	D1	D2	D3	H	H1	H2	L	L1	L2	R1	S	max. permissible load kg	kg
07770-10	steel	66,7	-	M10	19,1	13	44,5	27,8	1,2	17,9	14,6	50,8	16,3	12,7	7,9	500	0,375
07770-12	steel	66,7	-	M12	19,1	16	44,5	27,8	1,2	17,9	19,1	50,8	16,3	12,7	7,9	700	0,379
07770-16	steel	96,8	70	M16	22,2	19	63,5	38,5	0,8	22,6	23,8	88,9	23,1	-	12,7	1500	1,248
07770-20	steel	96,8	70	M20	25,4	22	63,5	38,5	0,8	22,6	30,2	88,9	23,1	-	12,7	2000	1,290
07770-110	stainless steel	66,7	-	M10	19,1	13	44,5	27,8	1,2	17,9	14,6	50,8	16,3	12,7	7,9	250	0,375
07770-112	stainless steel	66,7	-	M12	19,1	16	44,5	27,8	1,2	17,9	19,1	50,8	16,3	12,7	7,9	350	0,379
07770-116	stainless steel	96,8	70	M16	22,2	19	63,5	38,5	0,8	22,6	23,8	88,9	23,1	-	12,7	750	1,248
07770-120	stainless steel	96,8	70	M20	25,4	22	63,5	38,5	0,8	22,6	30,2	88,9	23,1	-	12,7	1000	1,290

Order No. Assembly key	Recommended tightening torque Nm	D2	L1	L2	L3	SW	SW1	Suitable for lifting ring: Order No.
07770-101	10	13	14	16,3	17,5	24	1/4˝	07770-10, 07770-12
	25	16	14	16,3	17,5	24	1/4"	07770-110, 07770-112
07770-201	50	19	16,5	23,1	28,6	32	3/8˝	07770-16, 07770-20
	80	22	16,5	23,1	28,6	32	3/8"	07770-116, 07770-120

Pivoting Lift Rings



Material:
Body in tempered steel; eye in steel

Surface finish:
Black oxide finish; eye hardened

Sample order:
nlm 07772-08035

Note:
Each Pivoting Lift Ring undergoes visual inspection after load testing (safety factor 6).
Each Pivoting Lift Ring is supplied wih a technical safety data sheet for installation.
Do not use spacer washers between the bushing flange and support surface.
Fasten the screws to the stated torque. Check and tighten the screws regularly. After assembly, check if the clevis turns freely in all directions.
Lift with care! Avoid impacts!
In no event must the permissible load stamped on the Pivoting Lift Ring be exceeded.

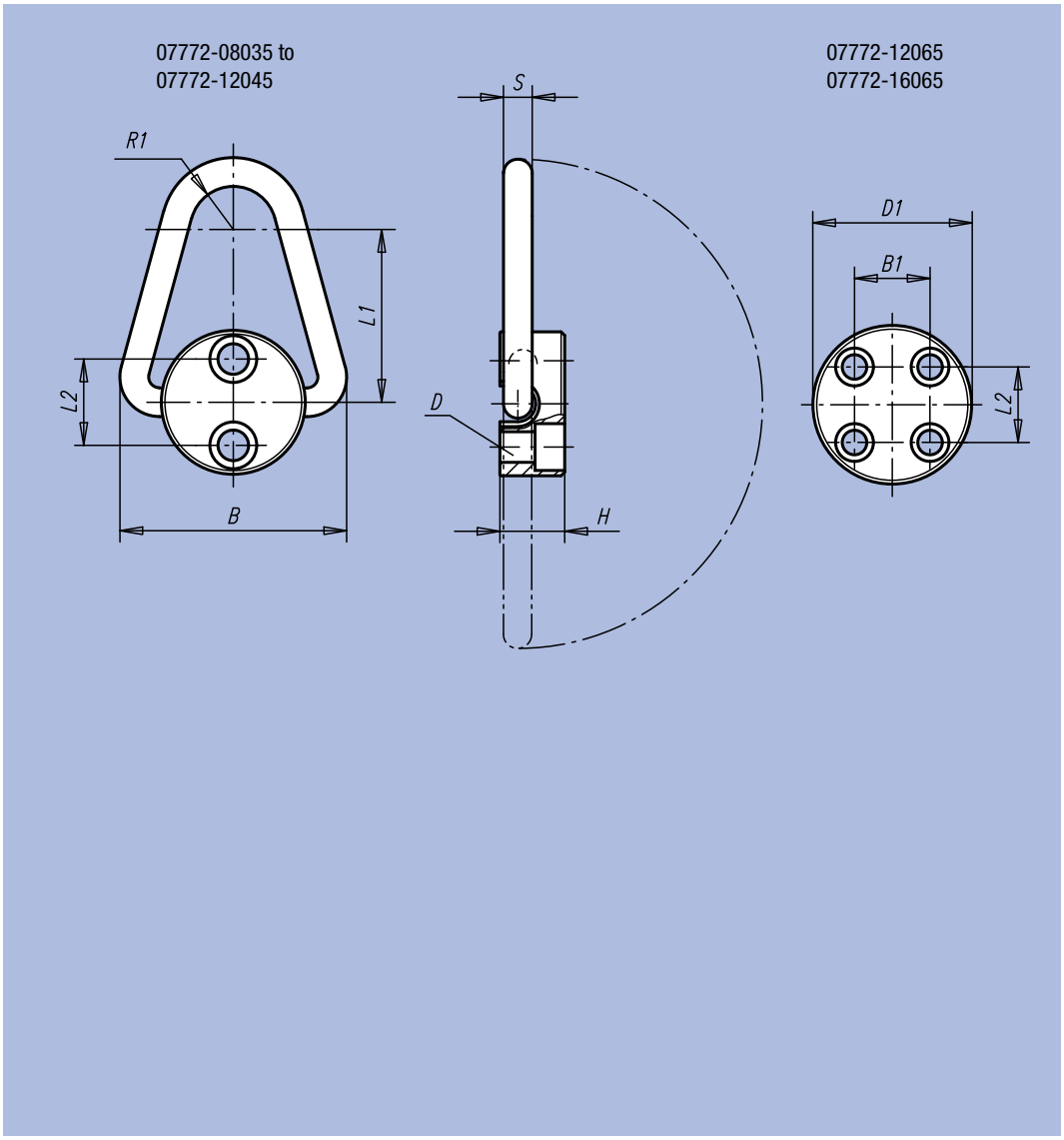

Order No.	D for screw DIN 912	D1	B	B1	H	L1	L2	R1	S	Tightening torque Nm	max. permissible load kg	kg
07772-08035	M8x35 (2x)	45	65	-	19	51	25,4	13	8	10	900	0,300
07772-10040	M10x40 (2x)	57	85	-	22	64	28,6	16	10	15	1100	0,600
07772-12045	M12x45 (2x)	64	100	-	29	76	38,1	19	13	35	2250	0,900
07772-12065	M12x65 (4x)	80	130	31,8	35	102	41,3	22	19	45	5400	1,900
07772-16065	M16x65 (4x)	92	160	31,8	48	127	52,4	25,4	25,4	100	9000	4,100

Forged Center Pulls



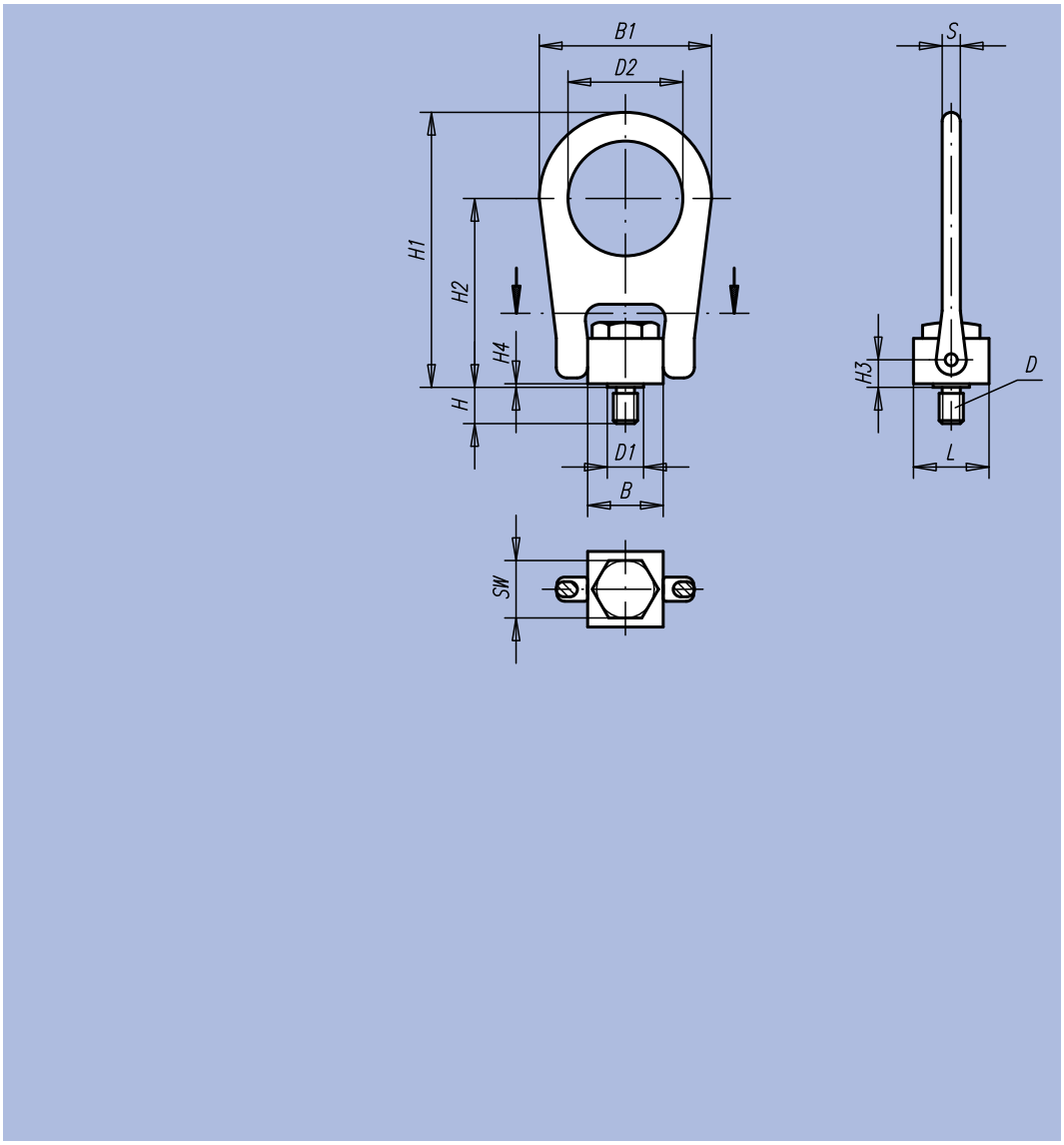

Material:
Tempered steel

Surface finish:
Black oxide finish

Sample order:
nlm 07774-10

Note:
Each Forged Center Pull undergoes visual inspection after load testing (safety factor 5).
Each Forged Center Pull is supplied wih a technical safety data sheet for installation.
Do not use spacer washers between the bushing flange and support surface.
Fasten the screws to the stated torque. Check and tighten the screws regularly. After assembly, check if the clevis turns freely in all directions.
Lift with care! Avoid impacts!
In no event must the permissible load stamped on the Forged Center Pull be exceeded.

Order No.	B	B1	D	D1	D2	H	H1	H2	H3	H4	L	S	SW	max. permissible load kg	Tightening torque Nm
07774-08	25,4	57,2	M8	12,7	38,1	12	91,3	62,7	8,7	1,2	25,4	6,3	19	400	10
07774-10	25,4	57,2	M10	12,7	38,1	15	91,3	62,7	8,7	1,2	25,4	6,3	19	450	17
07774-12	50,8	112,7	M12	25,4	76,2	18	161,9	101,6	14,3	1,6	38,1	19	32	1050	37
07774-16	50,8	112,7	M16	25,4	76,2	24	161,9	101,6	14,3	1,6	38,1	19	32	1900	80
07774-20	50,8	112,7	M20	25,4	76,2	30	161,9	101,6	14,3	1,6	38,1	19	32	2150	134

Side Swivel



Material:
Tempered steel

Surface finish:
Black oxide finish

Sample order:
nlm 07775-10

Note:
Each Side Swivel undergoes a double safety inspection during its load testing. This Side Swivel is lighter and easier to handle than other types as a result of its light construction. The Side Swivel can be assembled using a forked spanner or an Inbus spanner.

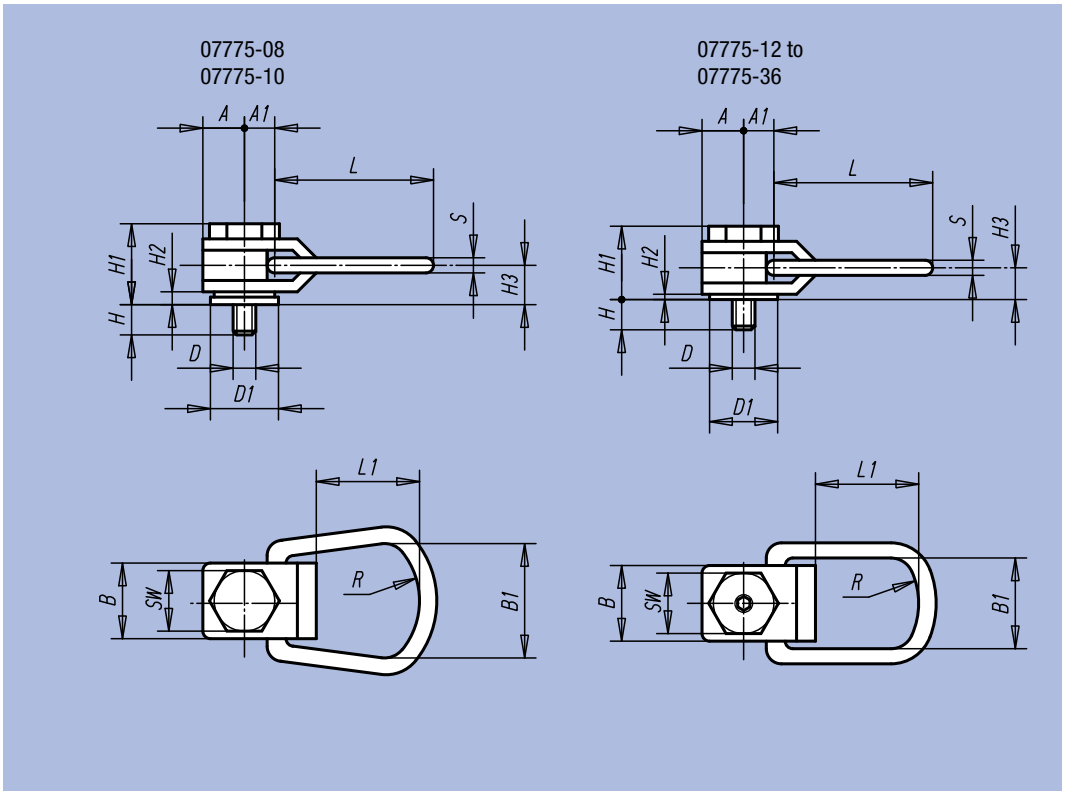

Order No.	A	A1	B	B1	D	D1	H	H1	H2	H3	L	L1	R	S	SW	hexagon socket	max. permissible load kg
07775-08	13	13	25	44	M8	21	16	33	3	14	76	52	25	8	19	-	325
07775-10	13	13	25	44	M10	21	20	33	3	14	76	52	25	8	19	-	500
07775-12	22	19	44	51	M12	35	24	48	4	21	110	75	38	13	32	6	725
07775-16	22	19	44	51	M16	35	32	48	4	21	110	75	38	13	32	8	1400
07775-20	29	25	57	67	M20	48	40	59	6	26	145	102	51	16	44	10	2290

Lifting Pins

self-locking



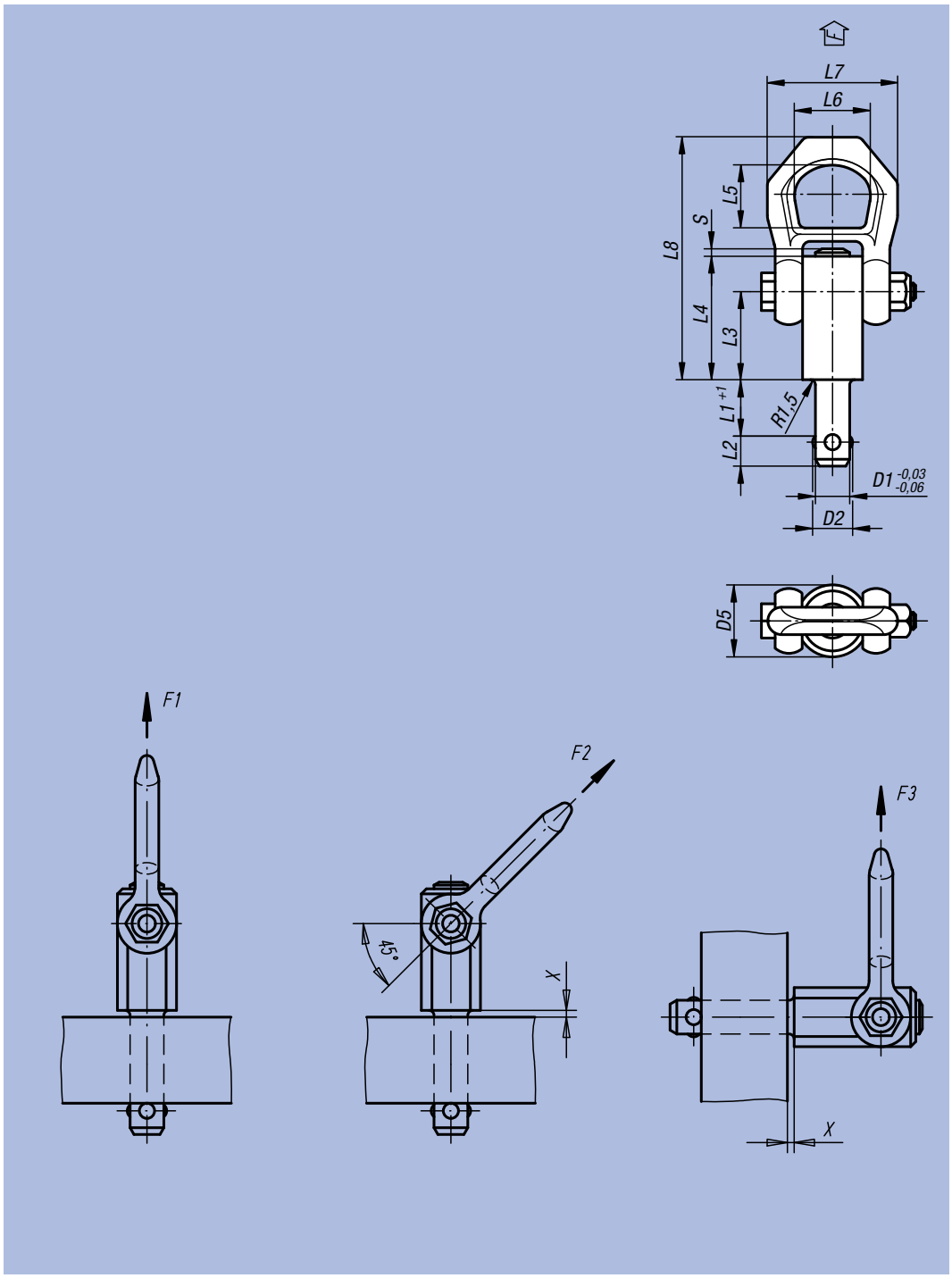

Material, surface finish:
Steel, manganese phosphate treated, pressure bolt from aluminium

Sample order:
nlm 07780-2110X50

Note:
Ball load-bearing bolts are used as a quick and easy load-bearing component with a movable shackle. The balls can be unlocked by pressing the push knob. The balls lock again securely when the knob is released.
– Corrosion protected
– Temperature range: +250 °C

TÜV tested.

Indications X min., F1, F2 and F3 with 5-fold safety.

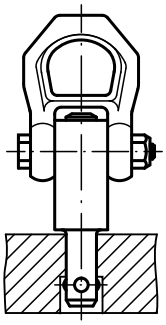

Order No.	D1	D2	D5	L1	L2	L3	L4	L5	L6	L7	L8	S	X min.	X max.	Receiving hole H11	F1 kN	F2 kN	F3 kN	g
07780-2110X15	10	11,7	21,5	15	10,2	25,7	36	27	30	49	87,5	2,2	1,5	10	10	2,7	2,4	2,1	139
07780-2110X25	10	11,7	21,5	25	10,2	25,7	36	27	30	49	87,5	2,2	1,5	15	10	2,7	2,4	2,1	145
07780-2110X35	10	11,7	21,5	35	10,2	25,7	36	27	30	49	87,5	2,2	1,5	25	10	2,7	2,4	2,1	152
07780-2110X50	10	11,7	21,5	50	10,2	25,7	36	27	30	49	87,5	2,2	1,5	35	10	2,7	2,4	2,1	161
07780-2112X15	12	14,2	21,5	15	11	25,7	36	27	30	49	87,5	2,2	1,5	10	12	3,5	3,2	2,8	147
07780-2112X25	12	14,2	21,5	25	11	25,7	36	27	30	49	87,5	2,2	1,5	20	12	3,5	3,2	2,8	156
07780-2112X35	12	14,2	21,5	35	11	25,7	36	27	30	49	87,5	2,2	1,5	25	12	3,5	3,2	2,8	162
07780-2112X50	12	14,2	21,5	50	11	25,7	36	27	30	49	87,5	2,2	1,5	45	12	3,5	3,2	2,8	178
07780-2516X25	16	18,6	25	25	15,1	31	44,5	27	30	49	92,8	3	1,5	20	16	4,8	4,5	4,1	272
07780-2516X50	16	18,6	25	50	15,1	31	44,5	27	30	49	92,8	3	1,5	40	16	4,8	4,5	4,1	311
07780-2516X75	16	18,6	25	75	15,1	31	44,5	27	30	49	92,8	3	1,5	55	16	4,8	4,5	4,1	351

Lifting Pins in stainless steel

self-locking



Material:
Bolt and shackle in stainless steel 1.4542;
pressure bolt in stainless steel 1.4305;
balls in stainless steel 1.4125;
pressure spring in stainless steel 1.4310

Surface finish:
Bolt and balls hardened and passivated

Sample order:
nlm 07782-2810X15
(please also indicate dimension L1)

Note:
Quickly and easily usable carrying element with movable shackle and safety bar against unintended detachment. The balls can be unlocked by pressing the push button. If the push button is released, the balls lock securely.

Corrosion and weathering resistant. High-strength, hardened bolt allows extreme loads with the highest wear-resistance. Temperature range of application up to 250°C.

CE certified.

Information X max, and F1 with 5-fold safety.

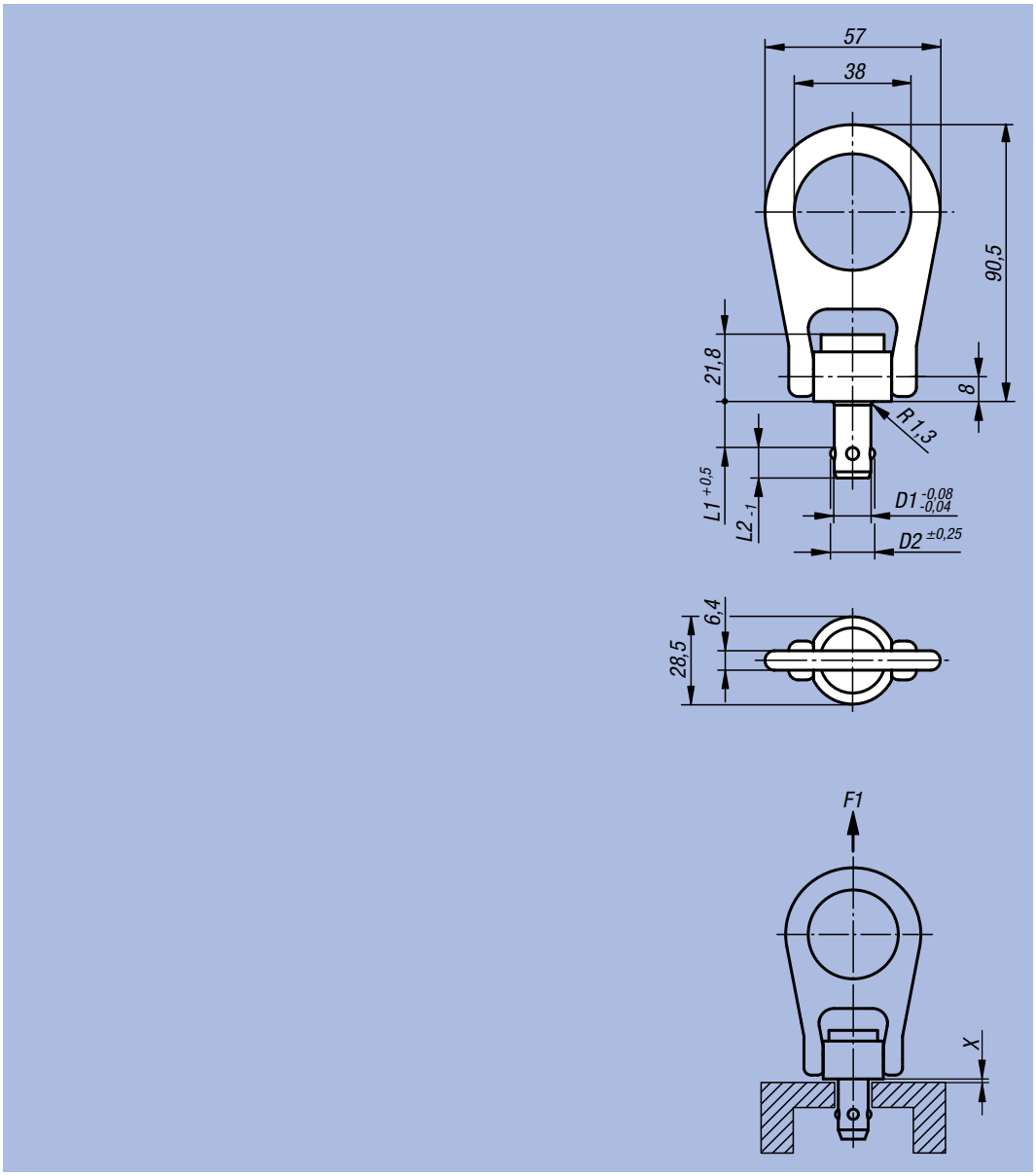

Order No.	D1	D2	L1	L2	X max.	F1 kN	Receiving hole
07782-2810X	10	12	15 / 20 / 25 / 30 / 35 / 40 / 50 / 75	9	1,5	4,4	10 +0,1
07782-2812X	12	14,27	15 / 20 / 25 / 30 / 35 / 40 / 50 / 75 / 100	10	1,5	5,5	12 +0,1
07782-2816X	16	19	15 / 20 / 25 / 30 / 35 / 40 / 50 / 75 / 100	14	1,5	6,2	16 +0,1

Receiver Bushings in stainless steel

for lifting pin



Material, surface finish:
Stainless steel 1.4542, hardened and passivated

Sample order:
nlm 07784-1015

Note:
The receiver bushings allow safe and quick receiving capability for lifting pins. They offer an easy and reliable installation in a variety of carrier materials. Usable even for thin-walled materials and blind holes.
They are corrosion-resistant with low wear.

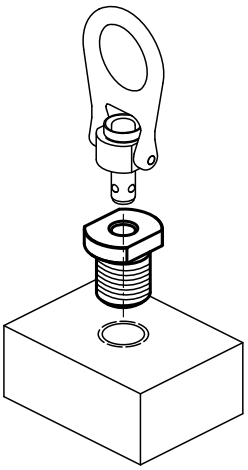

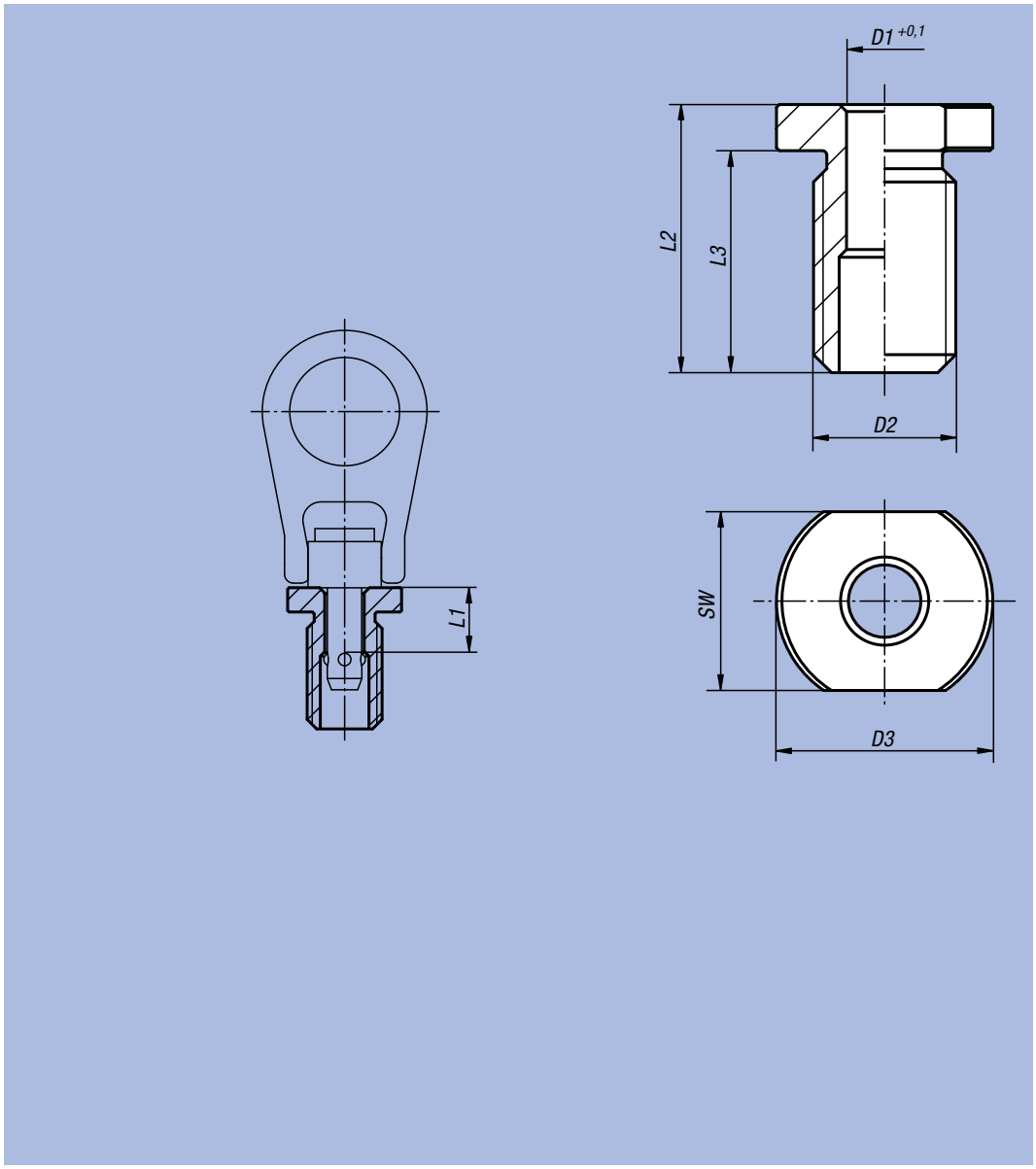

Order No.	D1	D2	D3	L1	L2	L3	SW	Tightening torque Nm	Suitable for	kg
07784-1015	10	M20x2,5	34,8	15	29	22	26	36	07780-2110X15 / 07782-2810X15	0,070
07784-1215	12	M22x2,5	34,8	15	37	28	30	50	07780-2112X15 / 07782-2812X15	0,090
07784-1615	16	M27x3	41,2	15	41	31	32	69	07782-2816X15	0,140

Adjusting Rings

to DIN 705 in steel



Material, surface finish:
Steel, natural finish

Sample order:
nlm 07800-100301

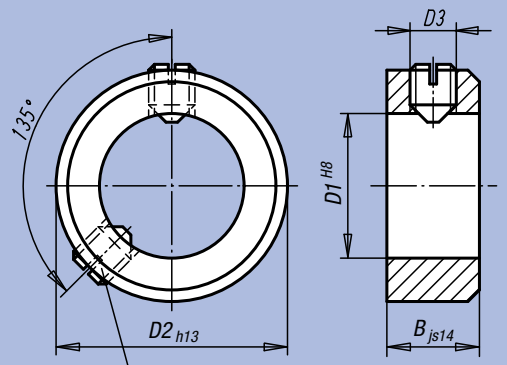

second grub screw above D1 = 70

Form A
with grub screw DIN 553
(recess)

Form E
with grub screw DIN 914
(hexagon socket)

Order No. Form A	Order No. Form E	D1	B	D2	D3 grub screw	kg
07800-100301	07800-300301	3	5	7	M2x3	0,001
07800-100401	07800-300401	4	5	8	M2,5x3	0,001
07800-100501	07800-300501	5	6	10	M3x4	0,003
07800-100601	07800-300601	6	8	12	M4x5	0,005
07800-100701	07800-300701	7	8	12	M4x5	0,005
07800-100801	07800-300801	8	8	16	M4x6	0,009
07800-100901	07800-300901	9	10	18	M5x8	0,015
07800-101001	07800-301001	10	10	20	M5x8	0,018
07800-101101	07800-301101	11	10	20	M5x8	0,017
07800-101201	07800-301201	12	12	22	M6x8	0,025
07800-101401	07800-301401	14	12	25	M6x8	0,032
07800-101501	07800-301501	15	12	25	M6x8	0,030
07800-101601	07800-301601	16	12	28	M6x8	0,039
07800-101801	07800-301801	18	14	32	M6x8	0,060
07800-102001	07800-302001	20	14	32	M6x8	0,054
07800-102201	07800-302201	22	14	36	M6x10	0,070
07800-102401	07800-302401	24	16	40	M8x12	0,101
07800-102501	07800-302501	25	16	40	M8x10	0,096
07800-102601	07800-302601	26	16	40	M8x10	0,091
07800-102801	07800-302801	28	16	45	M8x12	0,122
07800-103001	07800-303001	30	16	45	M8x10	0,111
07800-103201	07800-303201	32	16	50	M8x12	0,146
07800-103401	07800-303401	34	16	50	M8x12	0,133
07800-103501	07800-303501	35	16	56	M8x12	0,189
07800-103601	07800-303601	36	16	56	M8x12	0,182
07800-103801	07800-303801	38	16	56	M8x12	0,167
07800-104001	07800-304001	40	18	63	M10x16	0,263
07800-104201	07800-304201	42	18	63	M10x16	0,245
07800-104501	07800-304501	45	18	70	M10x16	0,319
07800-104801	07800-304801	48	18	70	M10x16	0,288
07800-105001	07800-305001	50	18	80	M10x16	0,433
07800-105201	07800-305201	52	18	80	M10x16	0,410
07800-105501	07800-305501	55	18	80	M10x16	0,375
07800-105601	07800-305601	56	18	80	M10x16	0,362
07800-105801	07800-305801	58	20	90	M10x16	0,584
07800-106001	07800-306001	60	20	90	M10x16	0,555
07800-106301	07800-306301	63	20	90	M10x16	0,509
07800-106501	07800-306501	65	20	100	M10x20	0,712
07800-106801	07800-306801	68	20	100	M10x20	0,663
07800-107001	07800-307001	70	20	100	M10x20	0,629
07800-107201	07800-307201	72	22	110	M12x20	0,938
07800-107501	07800-307501	75	22	110	M12x20	0,878
07800-108001	07800-308001	80	22	110	M12x20	0,773
07800-108501	07800-308501	85	22	125	M12x25	1,139
07800-109001	07800-309001	90	22	125	M12x20	1,021
07800-110001	07800-310001	100	25	140	M12x25	1,480

Adjusting Rings

to DIN 705 in stainless steel



Material, surface finish:
Stainless steel 1.4305, natural finish

Sample order:
nlm 07800-100302

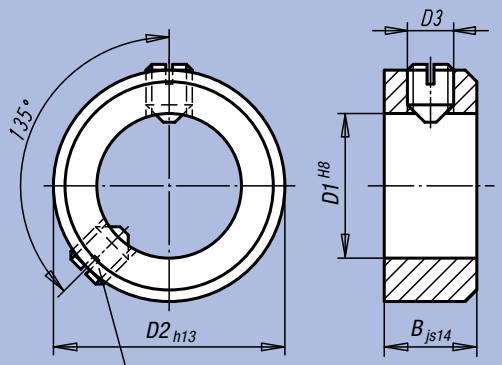

Form A
with grub screw DIN 553
(recess)

Form E
with grub screw DIN 914
(hexagon socket)

Order No. Form A	Order No. Form E	D1	B	D2	D3 grub screw	kg
07800-100302	07800-300302	3	5	7	M2x3	0,001
07800-100402	07800-300402	4	5	8	M2,5x3	0,001
07800-100502	07800-300502	5	6	10	M3x4	0,003
07800-100602	07800-300602	6	8	12	M4x5	0,005
07800-100702	07800-300702	7	8	12	M4x5	0,005
07800-100802	07800-300802	8	8	16	M4x6	0,009
07800-100902	07800-300902	9	10	18	M5x8	0,015
07800-101002	07800-301002	10	10	20	M5x8	0,018
07800-101102	07800-301102	11	10	20	M5x8	0,017
07800-101202	07800-301202	12	12	22	M6x8	0,025
07800-101402	07800-301402	14	12	25	M6x8	0,032
07800-101502	07800-301502	15	12	25	M6x8	0,030
07800-101602	07800-301602	16	12	28	M6x8	0,039
07800-101802	07800-301802	18	14	32	M6x8	0,060
07800-102002	07800-302002	20	14	32	M6x8	0,054
07800-102202	07800-302202	22	14	36	M6x10	0,070
07800-102402	07800-302402	24	16	40	M8x12	0,101
07800-102502	07800-302502	25	16	40	M8x10	0,096
07800-102602	07800-302602	26	16	40	M8x10	0,091
07800-102802	07800-302802	28	16	45	M8x12	0,122
07800-103002	07800-303002	30	16	45	M8x10	0,111
07800-103202	07800-303202	32	16	50	M8x12	0,146
07800-103402	07800-303402	34	16	50	M8x12	0,133
07800-103502	07800-303502	35	16	56	M8x12	0,189
07800-103602	07800-303602	36	16	56	M8x12	0,182
07800-103802	07800-303802	38	16	56	M8x12	0,167
07800-104002	07800-304002	40	18	63	M10x16	0,263
07800-104202	07800-304202	42	18	63	M10x16	0,245
07800-104502	07800-304502	45	18	70	M10x16	0,319
07800-104802	07800-304802	48	18	70	M10x16	0,288
07800-105002	07800-305002	50	18	80	M10x16	0,433
07800-105202	07800-305202	52	18	80	M10x16	0,410
07800-105502	07800-305502	55	18	80	M10x16	0,375
07800-105602	07800-305602	56	18	80	M10x16	0,362
07800-105802	07800-305802	58	20	90	M10x16	0,584
07800-106002	07800-306002	60	20	90	M10x16	0,555
07800-106302	07800-306302	63	20	90	M10x16	0,509
07800-106502	07800-306502	65	20	100	M10x20	0,712
07800-106802	07800-306802	68	20	100	M10x20	0,663
07800-107002	07800-307002	70	20	100	M10x20	0,629
07800-107202	07800-307202	72	22	110	M12x20	0,938
07800-107502	07800-307502	75	22	110	M12x20	0,878
07800-108002	07800-308002	80	22	110	M12x20	0,773
07800-108502	07800-308502	85	22	125	M12x25	1,139
07800-109002	07800-309002	90	22	125	M12x20	1,021
07800-110002	07800-310002	100	25	140	M12x25	1,480

Slotted clamping ring



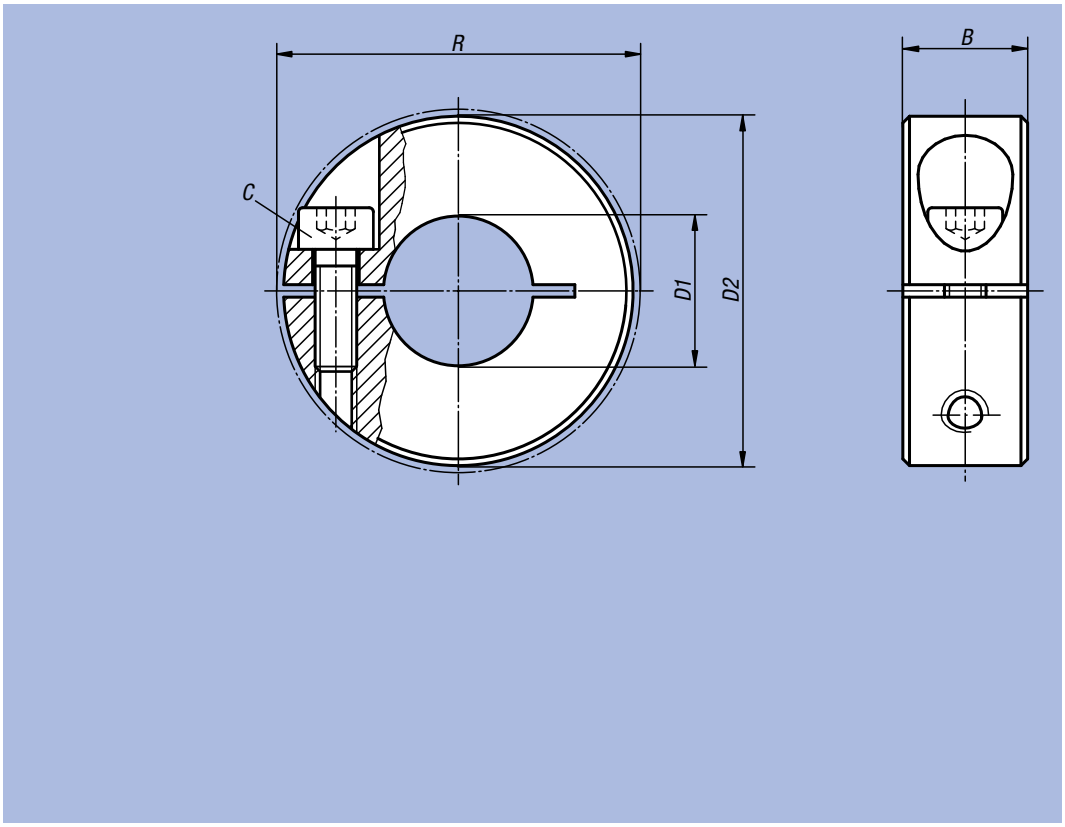

Material, surface finish:
Steel 1.0718, natural finish;
stainless steel 1.4305, natural finish

Sample order:
nlm 07810-01001

Note:
Slotted clamping rings surround the shaft with a uniformly distributed clamping force. This leads to a dimensionally precise fit and very high retaining forces without damaging the shaft.

The shaft tolerance should lie within h11.

Temperature range:
-40 °C up to +175 °C.

On request:
Other dimensions.

Order No. Material steel	Order No. Material stainless steel	B	C (DIN 912)	D1	D2	R	≙ kg
07810-01001	07810-01002	9	M3x10	10	24	26	0,022
07810-01201	07810-01202	11	M4x12	12	28	31,8	0,038
07810-01501	07810-01502	13	M5x16	15	34	39,4	0,065
07810-01601	07810-01602	13	M5x16	16	34	39,4	0,063
07810-01801	07810-01802	13	M5x16	18	36	41,1	0,069
07810-02001	07810-02002	15	M6x18	20	40	46,4	0,097
07810-02201	07810-02202	15	M6x18	22	42	48,1	0,103
07810-02501	07810-02502	15	M6x18	25	45	50,8	0,114
07810-02801	07810-02802	15	M6x18	28	48	53,5	0,123
07810-03001	07810-03002	15	M6x18	30	54	58,4	0,163
07810-04001	07810-04002	15	M6x18	40	60	64,8	0,163
07810-05001	07810-05002	19	M8x25	50	78	83,9	0,370

Split clamping ring



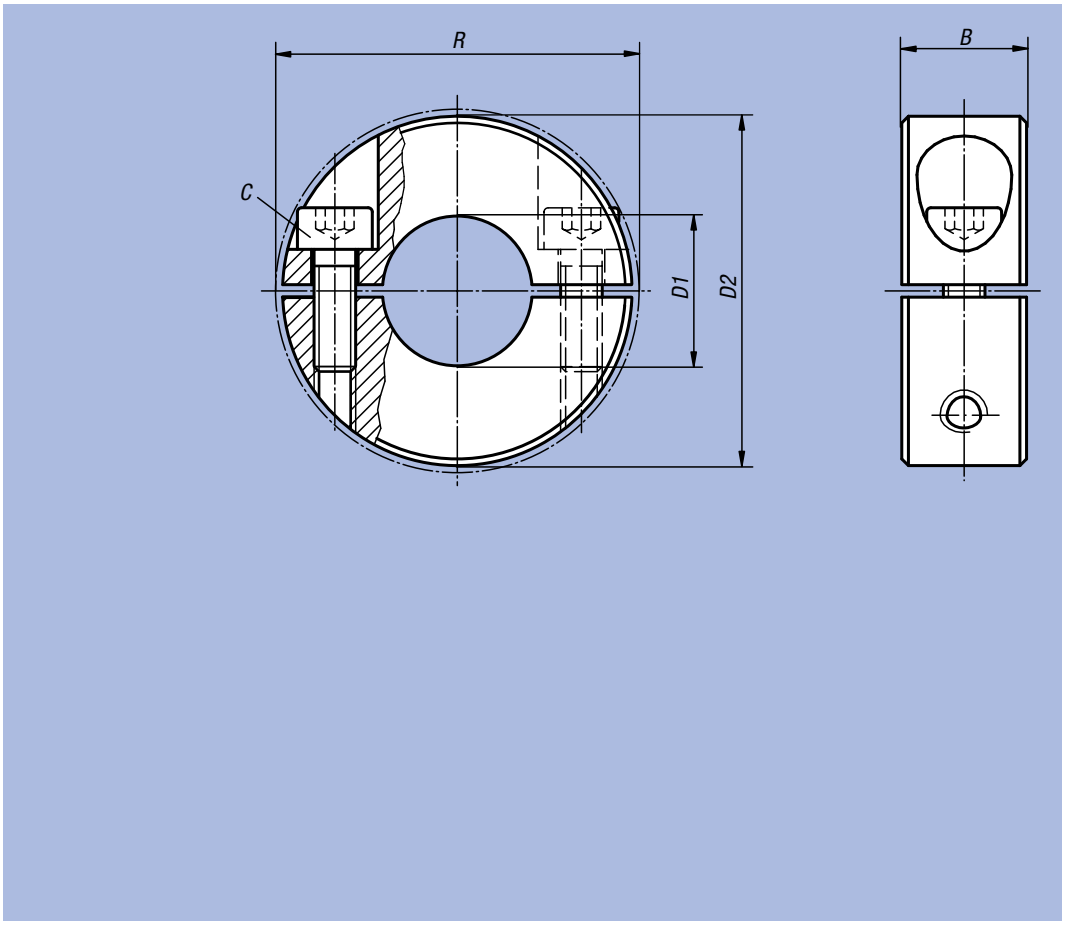

Material, surface finish:
Steel 1.0718, natural finish;
stainless steel 1.4305, natural finish

Sample order:
nlm 07812-01001

Note:
Split clamping rings surround the shaft with a uniformly distributed clamping force. This leads to a dimensionally precise fit and very high retaining forces without damaging the shaft.

The shaft tolerance should lie within h11.

Easy and fast installation is possible without damaging the near-by components due to the two-part design.

Temperature range:
-40 °C up to +175 °C.

On request:
Other dimensions.

Order No. Material steel	Order No. Material stainless steel	B	C (DIN 912)	D1	D2	R	kg
07812-01001	07812-01002	9	M3x10	10	24	26	0,022
07812-01201	07812-01202	11	M4x12	12	28	31,8	0,038
07812-01501	07812-01502	13	M5x16	15	34	39,4	0,065
07812-01601	07812-01602	13	M5x16	16	34	39,4	0,063
07812-01801	07812-01802	13	M5x16	18	36	41,1	0,069
07812-02001	07812-02002	15	M6x18	20	40	46,4	0,097
07812-02201	07812-02202	15	M6x18	22	42	48,1	0,103
07812-02501	07812-02502	15	M6x18	25	45	50,8	0,114
07812-02801	07812-02802	15	M6x18	28	48	53,5	0,123
07812-03001	07812-03002	15	M6x18	30	54	58,4	0,163
07812-04001	07812-04002	15	M6x18	40	60	64,8	0,163
07812-05001	07812-05002	19	M8x25	50	78	83,9	0,386

Notes:

08000

Drill Jig Elements
Drill Jig
Drill Bushes



Drilling Plates



Material:
1.0036
Surface finish:
Natural finish
Sample order:
nlm 08000-02
Note:
Spring, cylindrical pin and shims are supplied. Complete sets of drilling jig elements see 08250 – 08280.

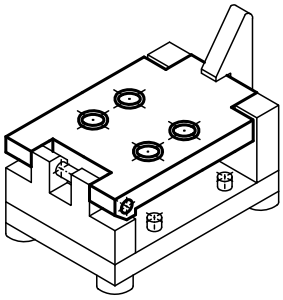

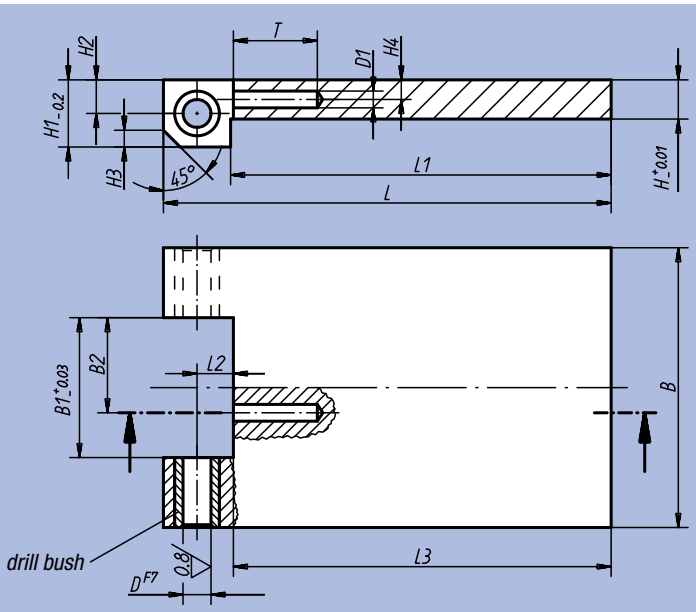

Order No.	L	L1	L2	L3	B	B1	B2	H	H1	H2	H3	H4	D	D1	T	kg
08000-01	80	68	6,5	67,5	50	25	17	7	12	6	4	2,5	5	3	15	0,205
08000-02	100	84	8,5	83,5	65	32	22	9	15	8	5,5	3	6	3	15	0,430
08000-03	150	130	10,5	129,5	100	50	33	16	20	10	7,5	5	8	3	15	1,755

Bearing Blocks, long



Material:
1.0036
Surface finish:
Black oxide finish
Sample order:
nlm 08050-01
Note:
Complete sets of drilling jig elements see 08250 – 08280.

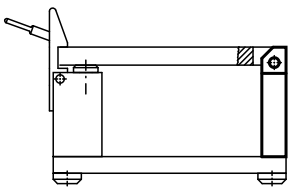

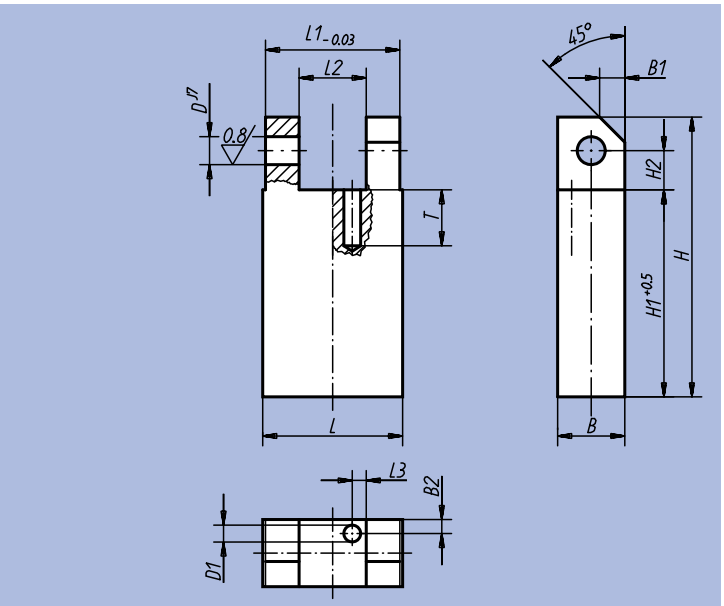

Order No.	L	L1	L2	L3	B	B1	B2	H	H1	H2	T	D	D1	kg
08050-01	25	24	12	2,5	12	4,5	2,5	50	37	7	10	5	3	0,096
08050-02	32	31	16	2,5	16	6	2,5	63	46	9	10	6	3	0,195
08050-03	50	49	20	2,5	20	8	2,5	100	79	11	10	8	3	0,705

Bearing Blocks, short

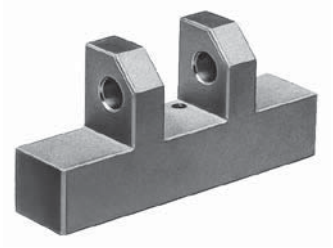

Material:
1.0036

Surface finish:
Phosphated

Sample order:
nlm 08100-02

Note:
Complete sets of drilling jig elements see 08250 – 08280.

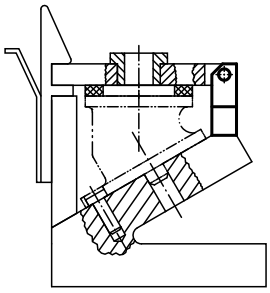

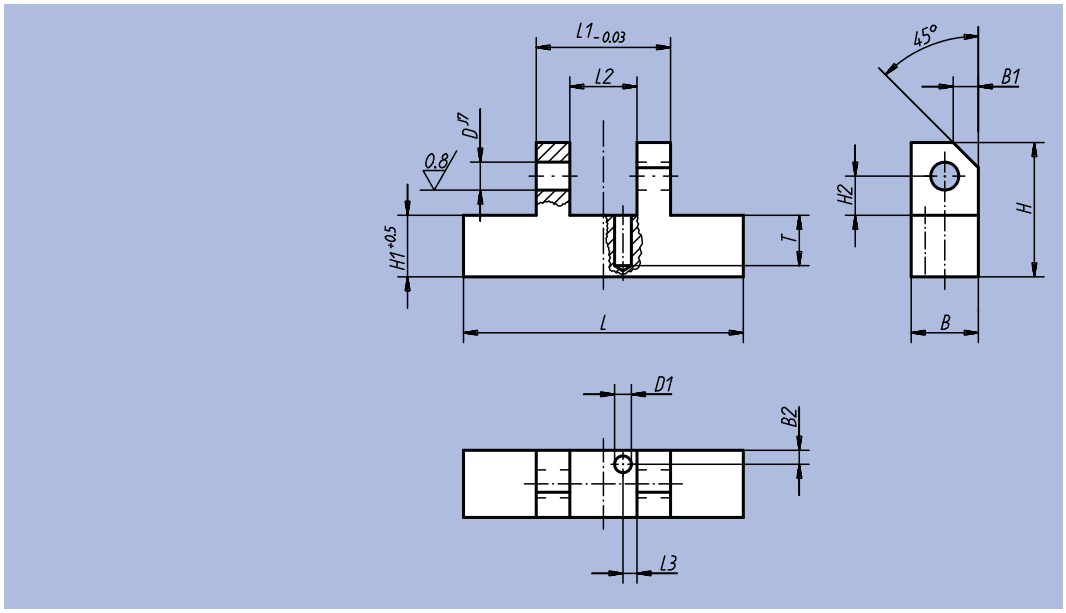

Order No.	L	L1	L2	L3	B	B1	B2	H	H1	H2	T	D	D1	kg
08100-01	50	24	12	2,5	12	4,5	2,5	24	11	7	9	5	3	0,065
08100-02	65	31	16	2,5	15	6	2,5	30	13	9	10	6	3	0,125
08100-03	100	49	20	2,5	20	8	2,5	48	27	11	10	8	3	0,495

Closing Parts



Material:
Base body 1.0036,
hinged fastener 1.0503

Surface finish:
Base body phosphated,
hinged fastener black oxide finish

Sample order:
nlm 08150-01

Note:
Missing dimensions for Hinged Fastener see 07560.
Complete sets of Drilling Jig Elements see 08250 – 08280.

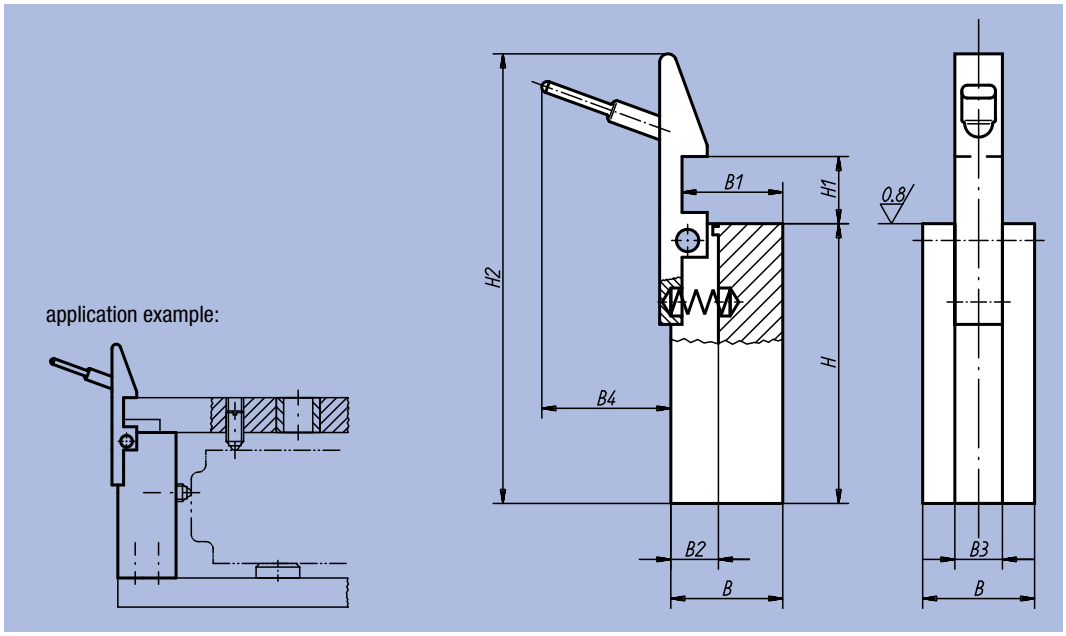

Order No.	B	B1	B2	B3	B4	H	H1	H2	kg
08150-01	20	18	9	8,5	23	50	12	77	0,147
08150-02	30	28	11	10,5	24	63	16	99	0,425
08150-03	40	36	14	14,5	24	100	25	145	1,200

Thrust Bolts



Material:
Tool steel

Surface finish:
Hardened and ground,
support surface without centring

Sample order:
nlm 02010-041

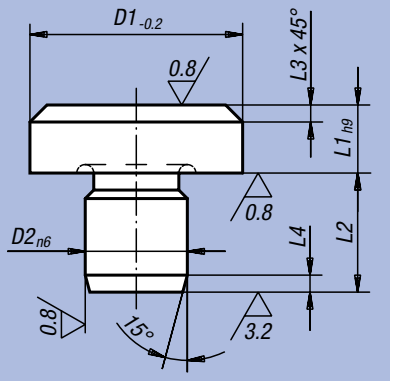

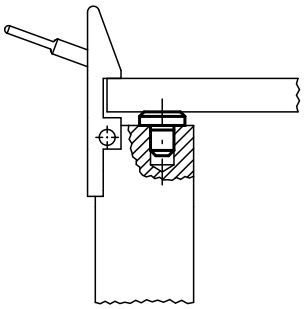

Order No.	D1	L1	D2	L2	L3	L4	kg
02010-041	6	2,5	4	6,5	0,7	1,2	0,001
02010-042	6	4,5	4	8,5	0,7	1,2	0,002
02010-061	10	4,5	6	8,5	0,9	1,5	0,004

Thrust Washers



Material:
Free-cutting steel

Surface finish:
Carbonitrided and tempered, black oxide finish; lower surface ground

Sample order:
nlm 08180-01

Note:
Complete sets of drilling jig elements see 08250 – 08280.

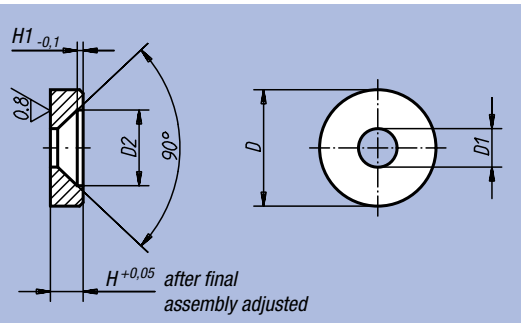

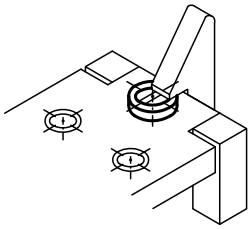

Order No.	D	D1	D2	H	H1	g
08180-01	12	4,3	8,3	2,5	0,4	2
08180-02	16	5,3	10,4	4,5	0,8	5

Drilling Jig Elements

with short and long bearing block



Material, surface finish and measurements:
See 08000 - 08180

Sample order:
nlm 08250-03

Order No.	comprising drill plate	comprising short bracket	comprising sealer part	comprising headed dowels	comprising pressure washer	comprising equalising washer and cylinder pin	kg
08250-01	08000-01	08100-01	08150-01	02010-041	08180-01	1 set	0,425
08250-02	08000-02	08100-02	08150-02	02010-042	08180-01	1 set	0,995
08250-03	08000-03	08100-03	08150-03	02010-061	08180-02	1 set	3,480

Order No.	comprising drill plate	comprising long bracket	comprising sealer part	comprising headed dowels	comprising pressure washer	comprising equalising washer and cylinder pin	kg
08260-01	08000-01	08050-01	08150-01	02010-041	08180-01	1 set	0,460
08260-02	08000-02	08050-02	08150-02	02010-042	08180-01	1 set	1,080
08260-03	08000-03	08050-03	08150-03	02010-061	08180-02	1 set	3,675

Drilling Plates

with short and long bearing block

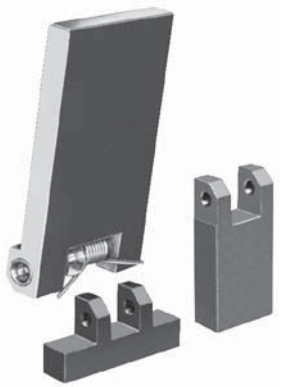

Material, surface finish and measurements:
See 08000 - 08180

Sample order:
nlm 08280-02

Order No.	comprising drill plate	comprising short bracket	comprising equalising washer and cylinder pin	kg
08270-01	08000-01	08100-01	1 set	0,280
08270-02	08000-02	08100-02	1 set	0,570
08270-03	08000-03	08100-03	1 set	2,295

Order No.	comprising drill plate	comprising long bracket	comprising equalising washer and cylinder pin	kg
08280-01	08000-01	08050-01	1 set	0,315
08280-02	08000-02	08050-02	1 set	0,655
08280-03	08000-03	08050-03	1 set	2,495

Handle

for drilling jigs



Material:
Light metal

Surface finish:
Painted black

Sample order:
nlm 08300-01

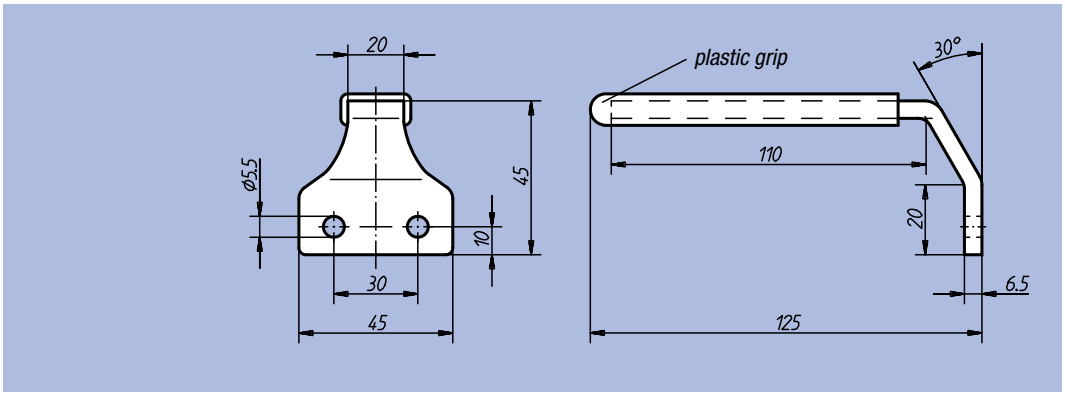

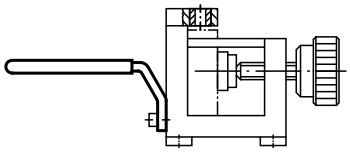

Order No.	kg
08300-01	0,070

Notes:

Applications: diverse jigs using NORELEM parts

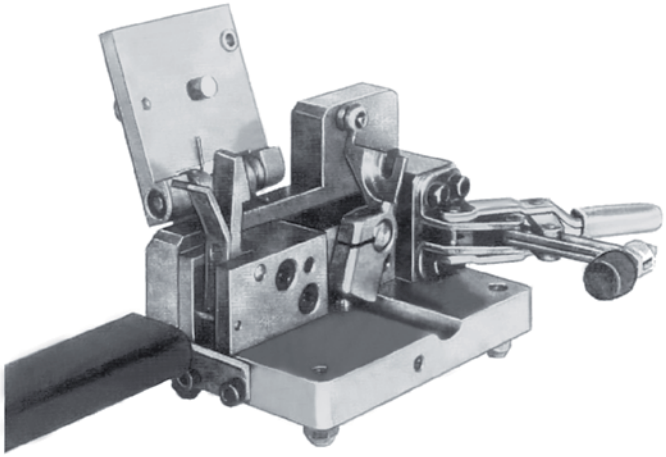

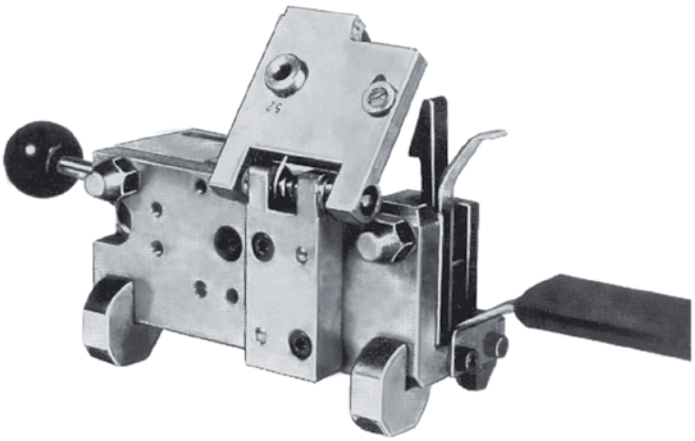

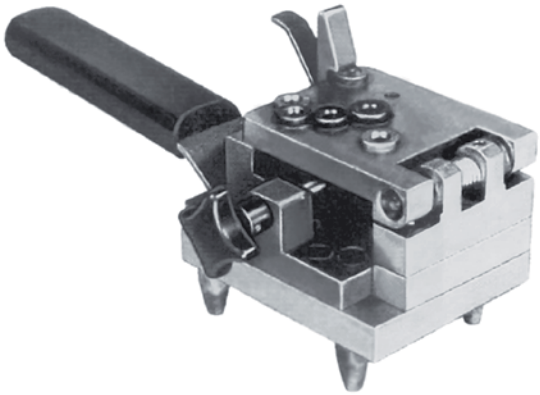

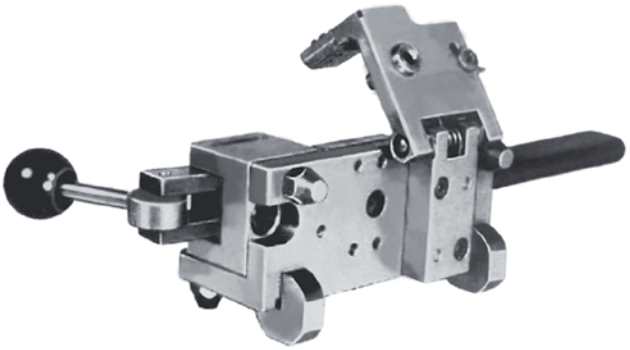

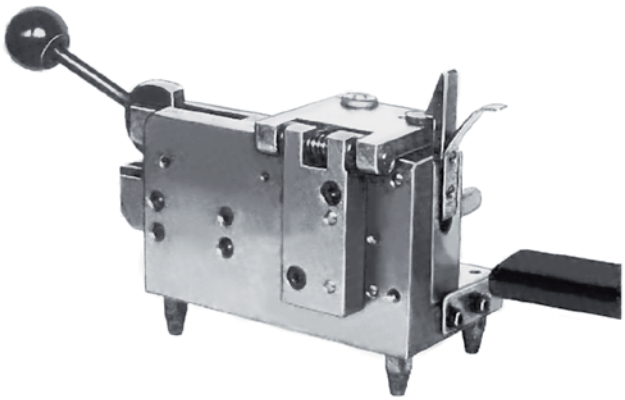



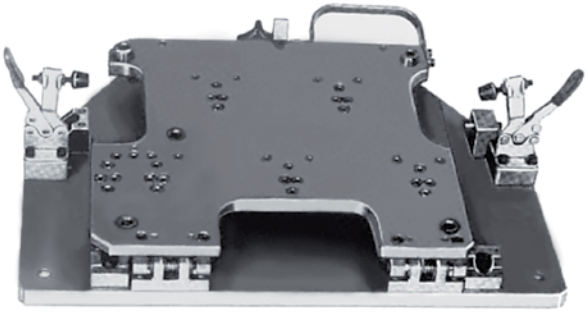

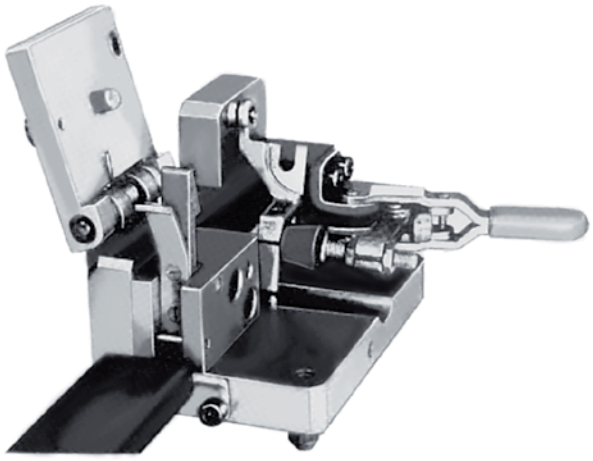

Technical Information for Drilling Jigs DIN 6348

Using NORELEM drilling jigs, down times and machine costs can be saved by significantly reducing the clamping times. The stress is removed from the design department and toolmaking through the universal ability to use the drilling jigs, even for small-scale production runs.
The drill and support plates are prepared dependent on the bore spacing of the part to be machined. While the corresponding drill bushes are placed in the drill plate, fixing pins are attached to the support plate to enable quick and easy positioning of the part for machining.
Since the drill and supporting plates can be changed quickly, the drilling jig is immediately available for another part to be machined.

Surface finish:
The drilling jigs are supplied in 9 sizes. They differ in terms of the position of the working area relative to the columns. In the case of sizes 0 to 3 the working area is in front of the columns, in sizes 3 to 6 the working area is between the columns.

Operating method:
The spiral-geared pinion shaft has cones at both ends. The axial force of the helical gear drive pulls the cone of the pinion shaft into a taper bore which is worked into the casing. The pair of cones at the ends of the pinion shaft work in opposition to the powerful and consistent clamping top and bottom; as a result, the drill plate cannot fall onto hands when the part to be machined is changed. The clamp holds perfectly and safely, even in case of vibration. The clamping element can be taken apart and put together by anyone with no technical skill. The clamping lever can be changed from left- to right-hand use by loosening the hexagonal bolt on the face of the right-hand cone. The pinion shaft can now be used so that the adjustable clamping lever is on the right-hand side.
The clamp is activated by pressing the lever down and released by lifting the lever up. The best working position can be engaged using the adjustable clamping lever, so the operator can work in a standing or seated position.

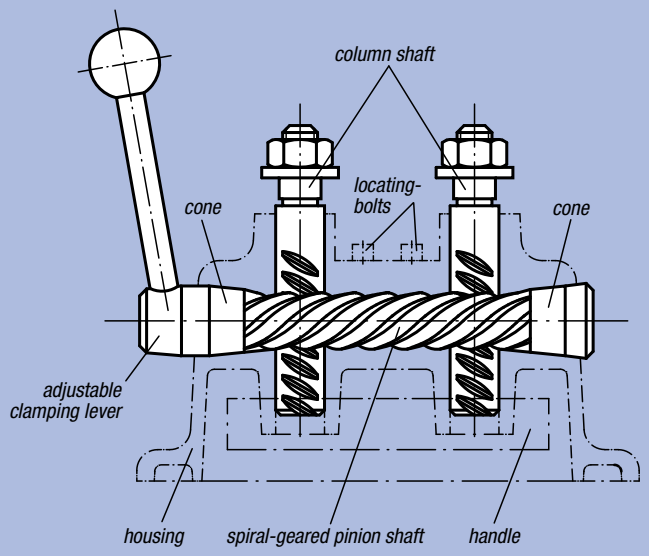

Force tables:

Hand Force N	Size								
	0	1	2	2S	3S	3	4	5	6
	Clamping Force N								
100	600	1200	1250	1250	1300	2800	2900	3800	3900
200	1100	2100	2150	2150	2200	5500	5600	7500	7600

Drilling Jigs

DIN 6348

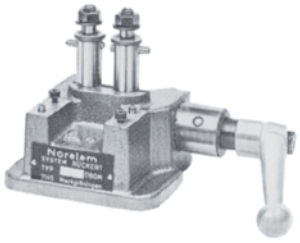

Size 0: 60 x 32 x 34 mm

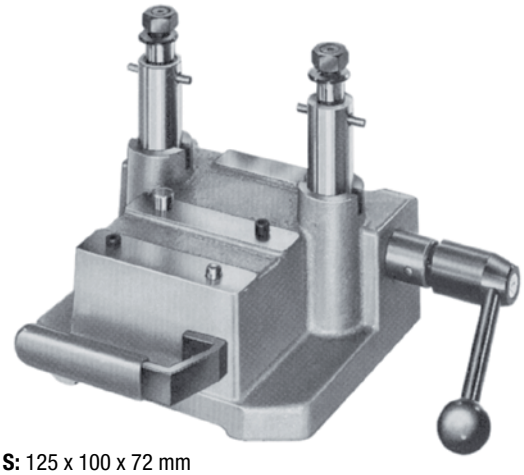

Size 3 S: 125 x 100 x 72 mm

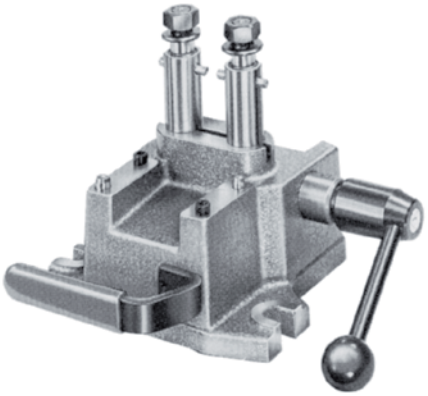

Size 1: 80 x 50 x 60 mm
Size 2: 100 x 60 x 70 mm

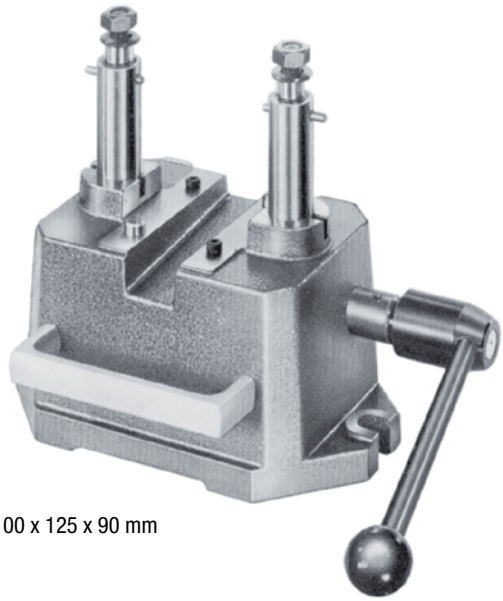

Size 3: 100 x 125 x 90 mm

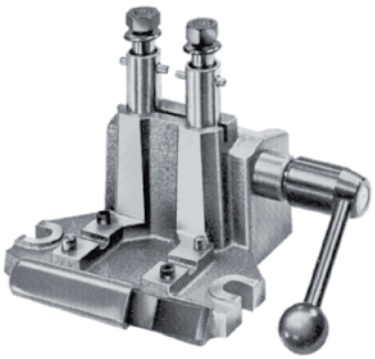

Size 2 S:
a size with expanded working area: 100 x 60 x 125 mm

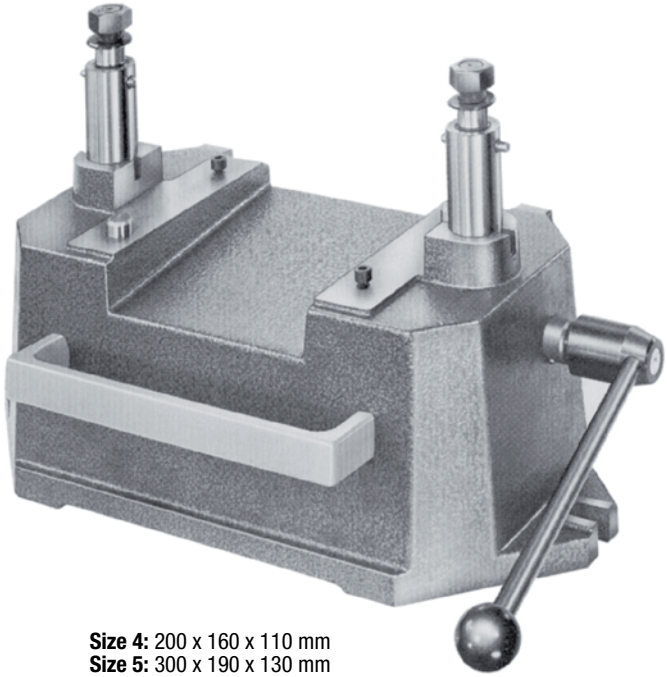

Size 4: 200 x 160 x 110 mm
Size 5: 300 x 190 x 130 mm
Size 6: 385 x 215 x 130 mm

Drilling Jigs size 0 to 3 S

DIN 6348 extended

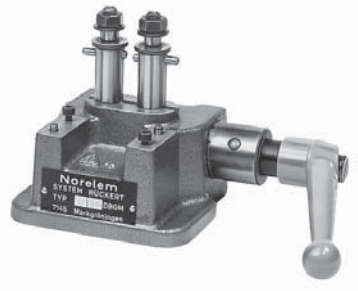

Sample order:
nlm 08550-02

Note:
Accessories, see 08570 - 08610 and 08640 - 08710.
Force table, see Technical Information for drilling jigs DIN 6348.

working area

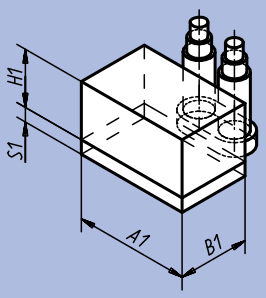

The working area can be extended:
in the case of dimension A1 and B1 by larger drilling plates and base or supporting plates, in the case of dimension H1 by Lengthening Columns 08600 and 08610.

size 0 to 2 S

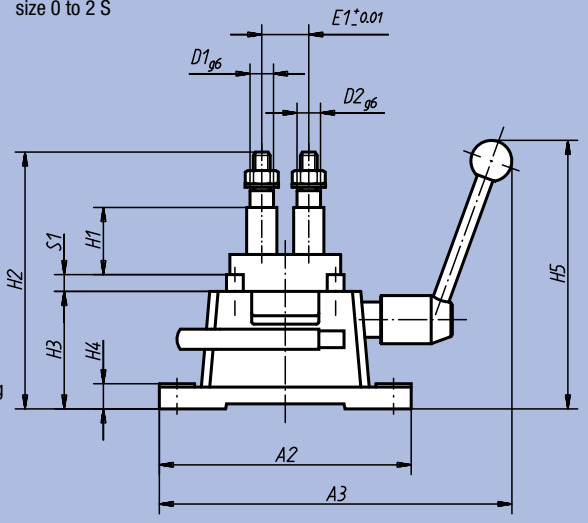

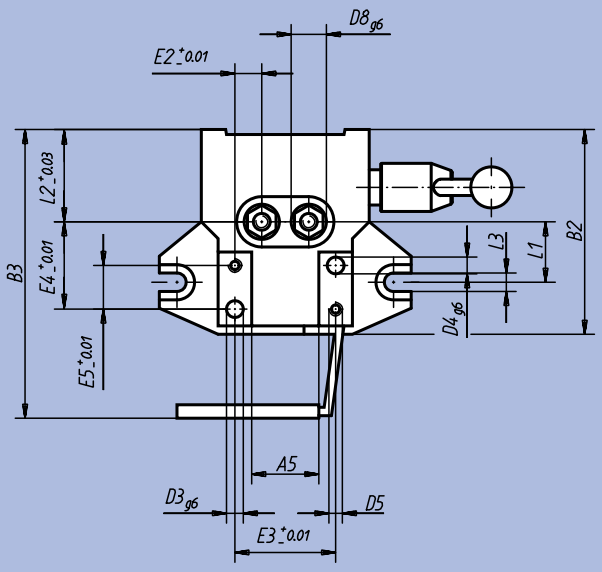

size 3 S

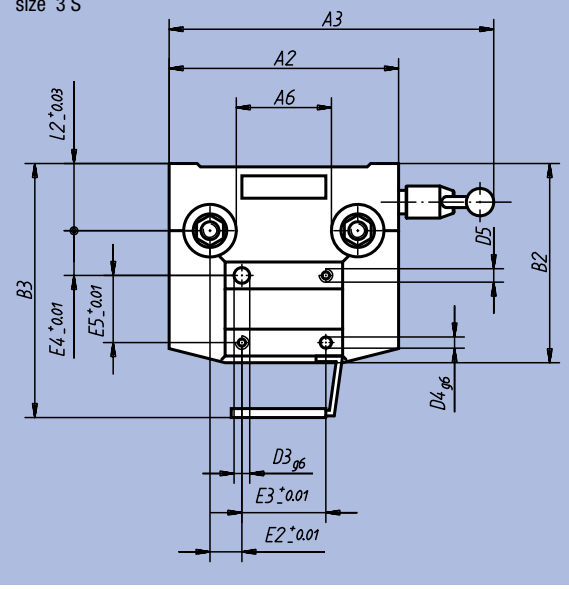

Drilling Jigs size 0 to 3 S

DIN 6348 extended

Order No.	Size	Size to DIN 6348	A1	A2	A3~	A5	A6	B1	B2~	B3~	D1	D2	D3	D4	D5	D8
08550-00	0	60x32	63	100	190	35	-	32	86	-	10	9	4	5	M4	15
08550-01	1	80x50	80	150	250	40	-	50	122	172	14	14	10	8	M6	18
08550-02	2	100x60	100	180	270	56	-	60	153	203	16	16	10	8	M6	25
08550-12	2 S	100x60x115	100	180	275	50	-	60	153	203	16	16	10	8	M6	25
08550-13	3 S	125x100	125	205	375	-	95	90	178	228	20	18	14	10	M6	30

Order No.	E1	E2	E3	E4	E5	H1 min.	H1 max.	H2 min.	H2 max.	H3	H4	H5~	L1	L2	L3	S1	Stroke at 210°	kg
08550-00	24	13	50	40	18	2	28	72	98	47	7	110	31	35	-	6	42	2,100
08550-01	28	16	60	46	20	8	50	121	163	70	15	180	36	55	11	10	42	4,300
08550-02	50	15	80	70	40	8	60	126	180	80	18	190	50	60	16	10	42	6,500
08550-12	50	15	80	70	40	63	115	138	190	25	18	190	50	60	16	10	42	6,000
08550-13	132	28,5	75	40	60	10	62	138	190	85	20	286	-	60	-	10	42	12,000

Drilling Jigs size 3 to 6

DIN 6348

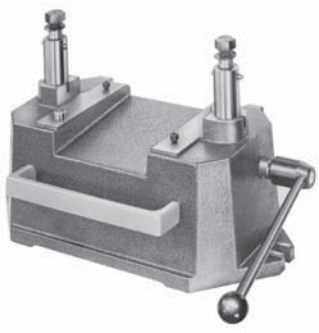

Sample order:
nlm 08550-05

Note:
Accessories see 08570 – 08610.
Force table see Technical Information.

working area

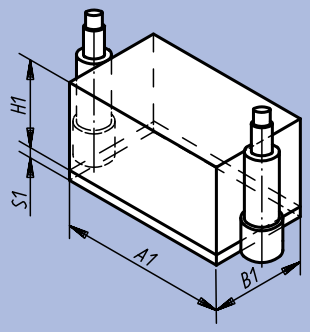

The working area can be extended:
in the case of dimension B1 by larger drilling plates and base or supporting plates, in the case dimension H1 by Lengthening Columns 08600 and 08610.

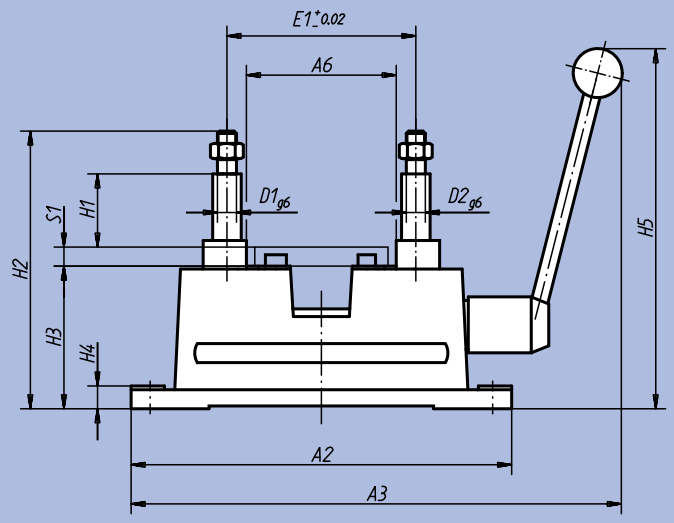

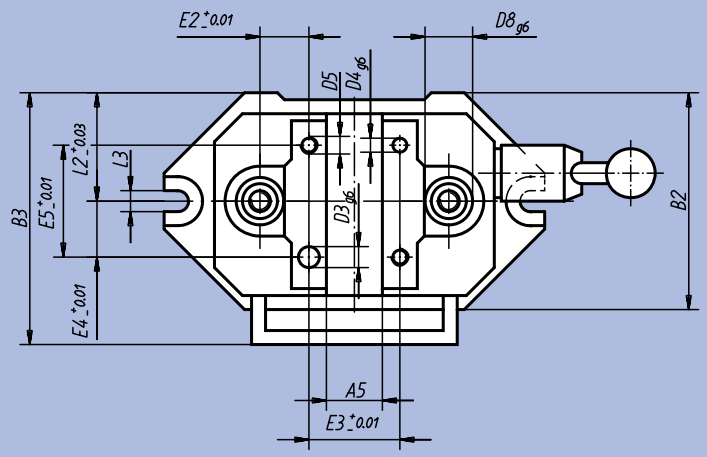

Drilling Jigs size 3 to 6

DIN 6348

Order No.	Size	Size to DIN 6348	A1	A2	A3~	A5	A6	B1	B2~	B3~	D1	D2	D3	D4	D5	D8
08550-03	3	100x125	85	270	340	39	95	125	155	195	20	18	14	10	M6	30
08550-04	4	200x160	188	400	480	120	195	160	195	235	20	18	14	10	M8	30
08550-05	5	300x190	278	530	660	180	285	190	238	278	24	22	20	18	M8	40
08550-06	6	400x215	385	700	820	220	390	215	250	290	26	24	20	18	M12	40

Order No.	E1	E2	E3	E4	E5	H1 min.	H1 max.	H2 min.	H2 max.	H3	H4	H5~	L2	L3	S1	Stroke at 210°	kg
08550-03	132	36	60	37,5	75	10	80	194	264	130	24	400	80	16	10	42	14
08550-04	236	43	150	50	100	5	95	205	295	152	24	420	100	16	15	42	23
08550-05	335	57,5	220	62,5	125	15	115	255	355	180	24	550	120	16	15	42	30
08550-06	460	60	340	90	180	12	112	260	360	190	24	550	132	20	18	42	47

Drilling Plates

DIN 6348 extended



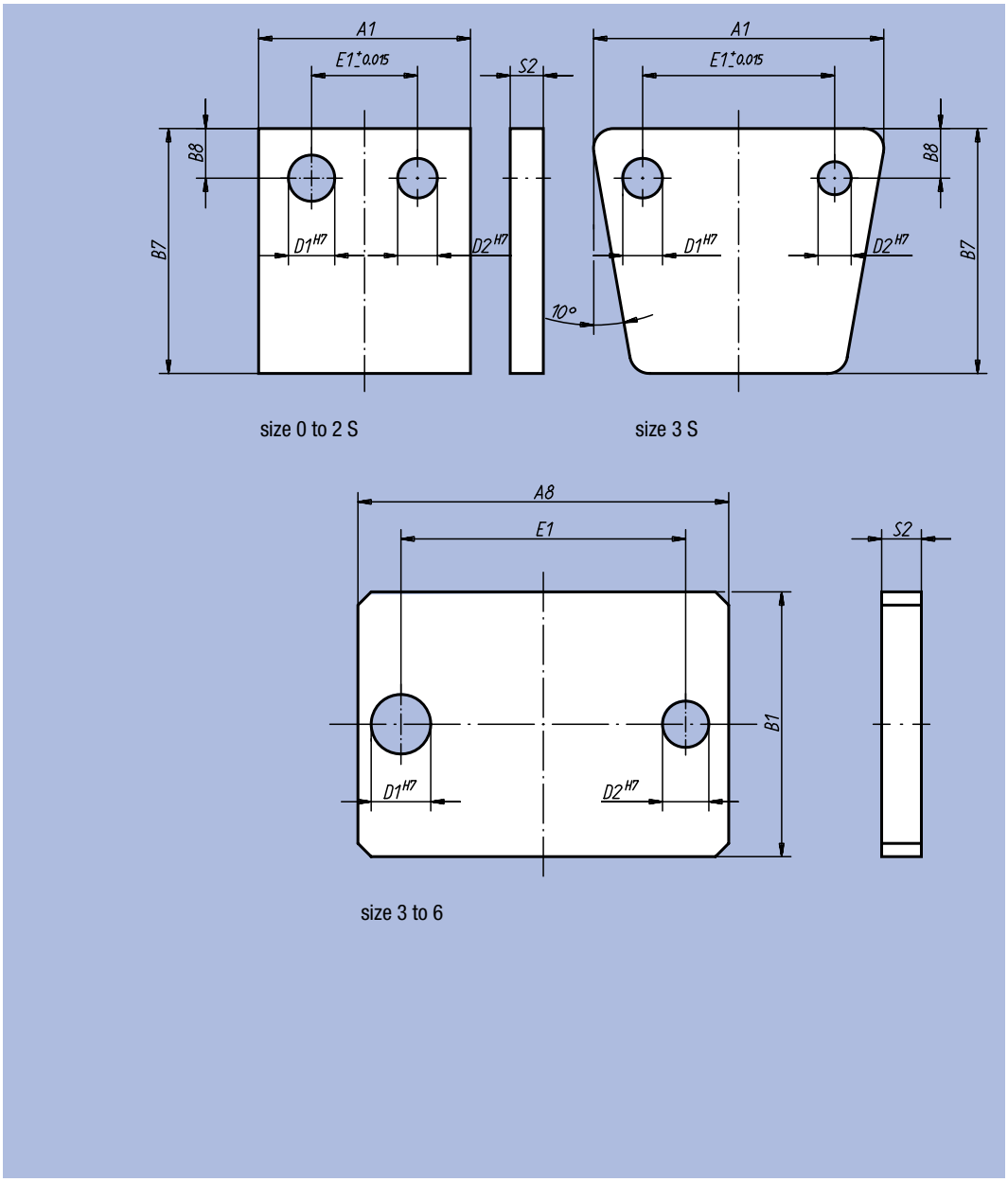

Material:
Steel

Surface finish:
Black oxide finish

Sample order:
nlm 08570-03

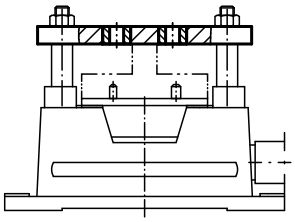

Order No.	Surface finish	Suitable for drill clamp size	Size of drill clamp	A1	B7	B8	E1	D1	D2	S2	kg
08570-00	Size 0 to 3 S	0	60 x 32	50	56	9	24	10	9	8	0,160
08570-01	Size 0 to 3 S	1	80 x 50	80	80	14	28	14	14	12	0,500
08570-02	Size 0 to 3 S	2 2 S	100 x 60 100 x 60 x 115	100	96	16	50	16	16	14	0,900
08570-13	Size 0 to 3 S	3 S	125 x 100	168	130	17	132	20	18	16	2,300

Order No.	Surface finish	Suitable for drill clamp size	Size of drill clamp	A8	B1	E1	D1	D2	S2	kg
08570-03	Size 3 to 6	3	100 x 125	170	125	132 ±0,015	20	18	16	2,600
08570-04	Size 3 to 6	4	200 x 160	275	160	236 ±0,015	20	18	16	5,500
08570-05	Size 3 to 6	5	300 x 190	380	190	335 ±0,015	24	22	20	11,000
08570-06	Size 3 to 6	6	400 x 250	530	215	460 ±0,025	26	24	27	26,600

Base Plates

DIN 6348



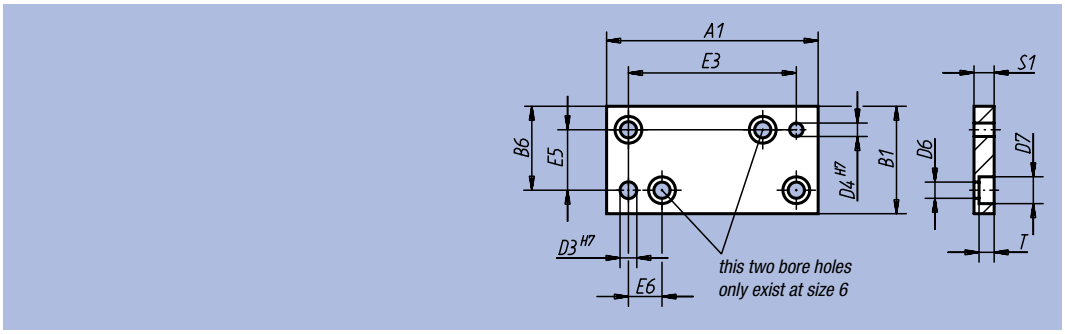

Material:
Steel

Surface finish:
Black oxide finish

Sample order:
nlm 08580-05

Note:
* ±0,01
** ±0,015

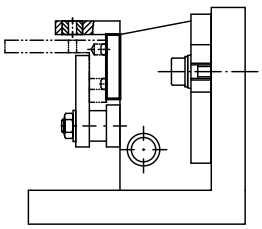

Order No.	Suitable for drill clamp size	Size of drill clamp	A1	B1	B6	D3	D4	D6	D7	E3	E5	E6	S1	T	kg
08580-00	0	60 x 32	63	32	25	4	5	4,5	8	50*	18*	-	6	4,6	0,100
08580-01	1	80 x 50	80	50	30	10	8	6,6	11	60*	20*	-	10	6,8	0,300
08580-02	2 2 S	100 x 60 100 x 60 x 115	100	60	50	10	8	6,6	11	80*	40*	-	10	6,8	0,500
08580-03	3 3 S	100 x 125 125 x 100	85	125	100	14	10	6,6	11	60**	75**	-	10	6,8	0,900
08580-04	4	200 x 160	188	160	130	14	10	9	15	150**	100**	-	15	9	3,500
08580-05	5	300 x 190	278	190	157,5	20	18	9	15	220**	125**	-	15	9	5,700
08580-06	6	400 x 250	400	250	225	20	18	13,5	20	320**	200**	40	18	13	12,000

Lengthening Column



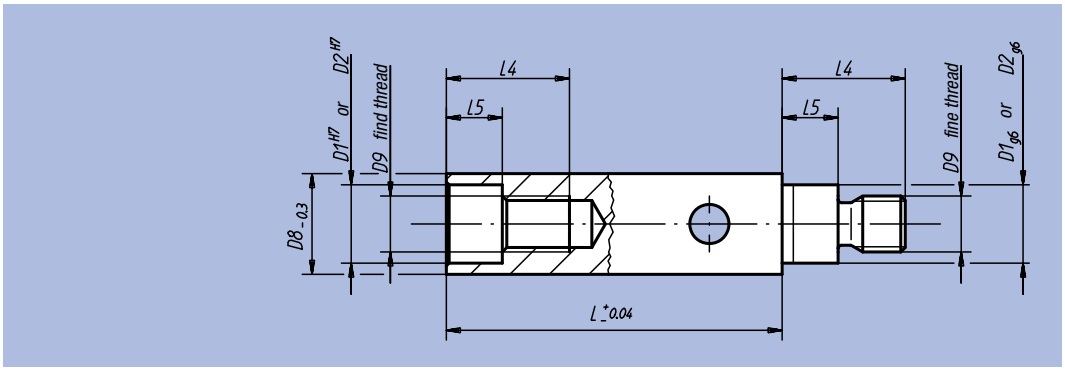

Material:
Hardened steel 1.0401

Surface finish:
Hardened and black oxide finish

Sample order:
nlm 08610-03 (in pairs)

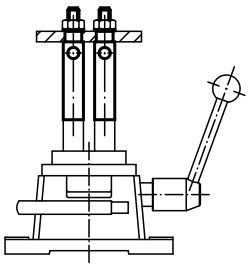

Order No.	Suitable for drill clamp size	D1	D2	D8	D9	L	L4	L5	kg piece
08600-01	1	14	14	22	M10x1	60	22	10	0,100
08600-02	2; 2 S	16	16	25	M14x1,5	60	28	12	0,150
08600-03	3; 3 S; 4	20	18	30	M14x1,5	60	32	14,5	0,300
08600-05	5	24	22	40	M20x1,5	60	43	18	0,600
08600-06	6	26	24	40	M20x1,5	70	46	22	0,650
08610-02	2; 2 S	16	16	25	M14x1,5	120	28	12	0,450
08610-03	3; 3 S; 4	20	18	30	M14x1,5	120	32	14,5	0,650
08610-05	5	24	22	40	M20x1,5	120	43	18	1,200
08610-06	6	26	24	40	M20x1,5	120	46	22	1,300

Drilling Jigs for cylindrical parts

Surface finish:
A consisting of:
– 08550 drilling jig DIN 6348
– 08710 V-Block with stop
– 08641 locating plate
– 08640 Index drilling disc with 16 accessible drill-bush diameters, see table. Intermediate dimensions can be partially achieved by means of removable drilling bushes DIN 173.
B consisting of:
– 08550 drilling jig DIN 6348
– 08710 V-Block with stop
– 08641 locating plate (this may be omitted in the case of Size 2, but then the max. clamping width is reduced by 30 mm)
– 08650 drill-bush support plate with 4 drill-bush supports Size 5-8, Ø 8, Ø 10, Ø 12 und Ø 15. Intermediate dimensions can be achieved in each case using removable drill bushes DIN 173. See table for drill-bush supports of your choice sizes 1 to 4. All drill-bush supports can be used for size 0 and size 2 supports.

Sample order:
nlm 08630-12

Note:
Rotary drilling jigs are eparticularly rational for producing cross holes in rotating parts. The drilling jig DIN 6348 Size 0 and 2 is used as the basic component.
A v-block with adjustable stop, having mini-divisions and vernier is used instead of the standard locating plate. The index drilling discs or drill-bish supports are mounted on the columns. Set-up is very easy and can be done without any technical knowledge.
All parts can be individually supplied later: they are manufactured true to gauge size. This enables finishes A and B to be interchangeable. A clamped part can have holes drilled, countersunk, milled or have threads cut in it using plug-in bushes.

Size 0
for workpieces Ø 2 to 28 mm

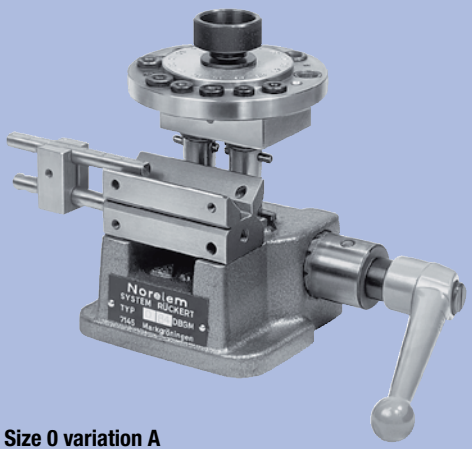

Size 0 variation A
with V-block and index drilling disc

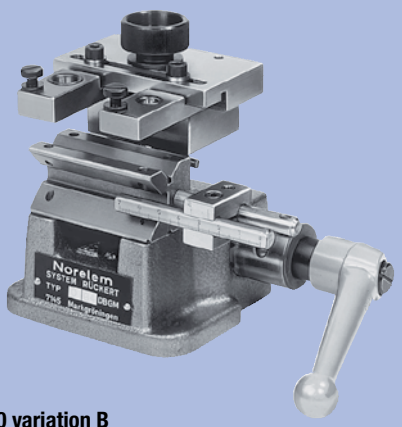

Size 0 variation B
with V-block and bush supports,
adjustment range of supports: 64 mm

Size 2
for workpieces Ø 6 to 60 mm

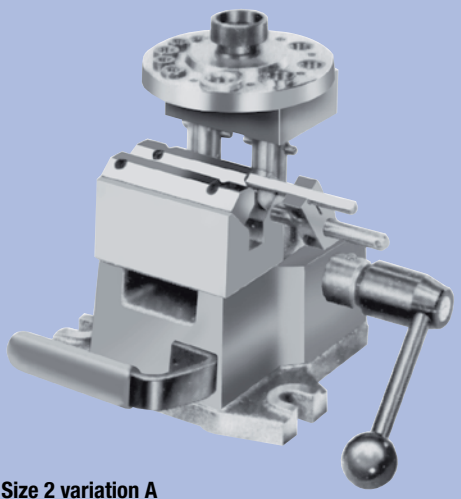

Size 2 variation A
with V-block and index drilling disc

A shaft having approx. 10 mm Ø should be inserted in order to align the upper strips of the V-block: only then can you tighten the hexagon socket screws individually

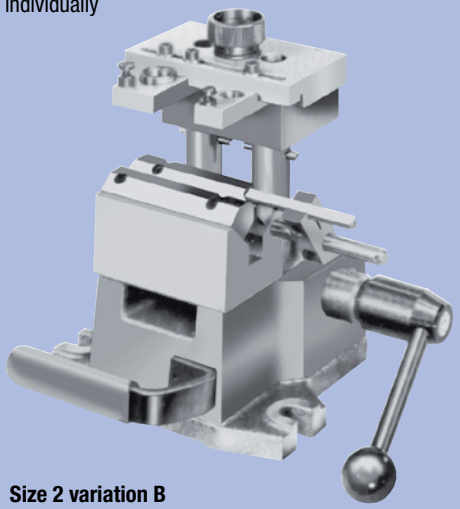

Size 2 variation B
with V-block and bush supports,
adjustment range of supports: 100 mm

Order No.	Size	Surface finish	kg
08630-10	0	A	3,000
08630-12	2	A	7,000
08630-20	0	B	3,000
08630-22	2	B	7,000

Index drilling discs

for drilling jig for cylindrical parts



Material:
1.0036
Surface finish:
Natural finish
Sample order:
nlm 08640-00
Note:
We can equip the index drilling discs to your requirements or supply them with 4 mm pre-drilled and threaded holes.

* Base bush for removable drill bushes.

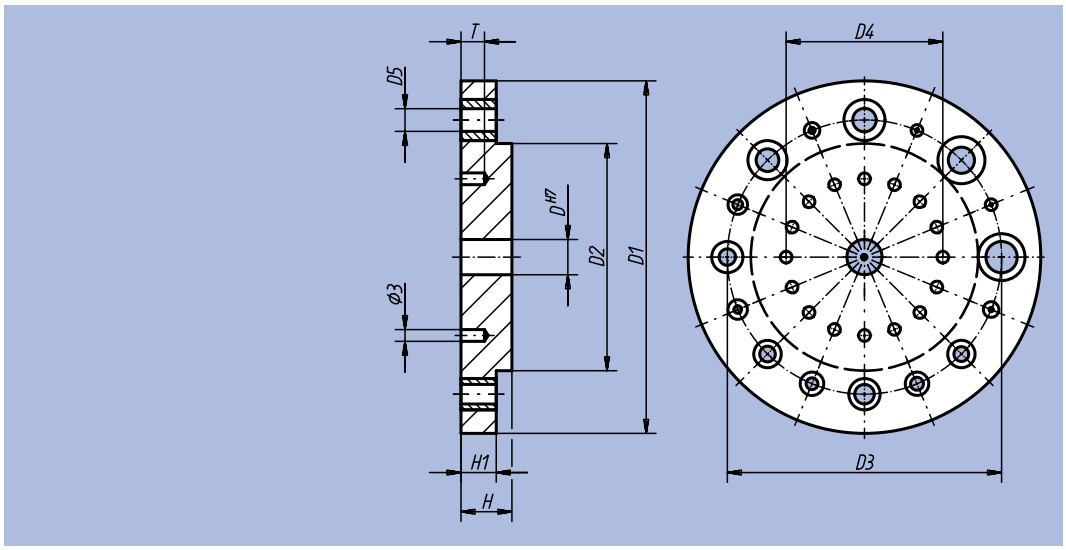

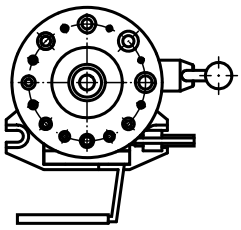

Order No.	Suitable for size of lathe-work drill clamp	D	D1	D2	D3	D4	H	H1	T	D5 pressed Drill bush	kg
08640-00	0	9	90	58	70	40	13	9	6	0,7 / 0,9 / 1,1 / 1,6 / 2 / 2,5 / 3 / 3,3 3,8 / 4 / 4,2 / 5 / 5,8 / 6 / 6,7 / 8*	0,200
08640-02	2	16	125	67	94	60	18	12	6	3 / 3,3 / 3,8 / 4 / 4,2 / 5 / 5,8 / 6* / 6,7 8* / 8,4 / 10* / 11,8 / 12* / 13,8 / 15*	0,300

Locating plates

for drilling jig for cylindrical parts



Material:
1.0036
Surface finish:
Natural finish
Sample order:
nlm 08641-00

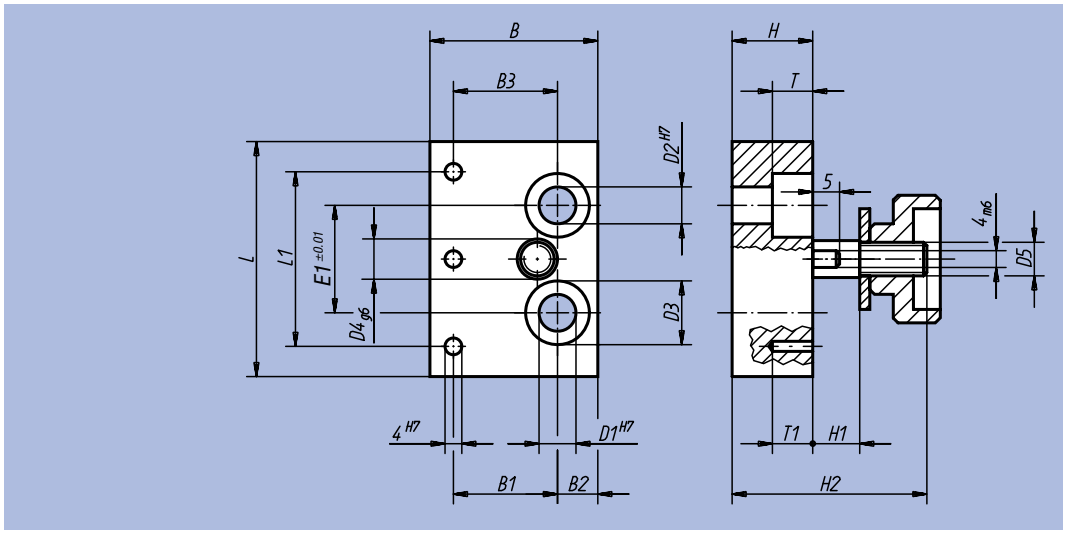

Order No.	Suitable for size of lathe-work drill clamp	D1	D2	D3	D4	D5	E1	L	L1	B	B1	B2	B3	H	H1	H2	T	T1	kg
08641-00	0	10	9	14,5	9	M8	24	55	40	40	24	10	20	19	11	45	9	10	0,360
08641-02	2	16	16	31	16	M10	50	90	80	65	29,8	19	29,8	29	15	60	15	10	1,250

Drill bush support plates

for drilling jig for cylindrical parts



Material:
1.0036

Surface finish:
Natural finish

Sample order:
Drill bush support plates:
nlm 08650-02
Drill bush support: nlm 08650-12X3,9
(Please also indicate dimension D)

Note:
The drill-bush supports appropriate to the drill-bush support plates must be ordered.

* Base bush for removable drill bushes.

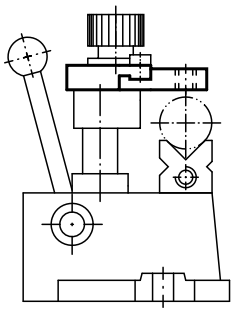

Drill bush support plate

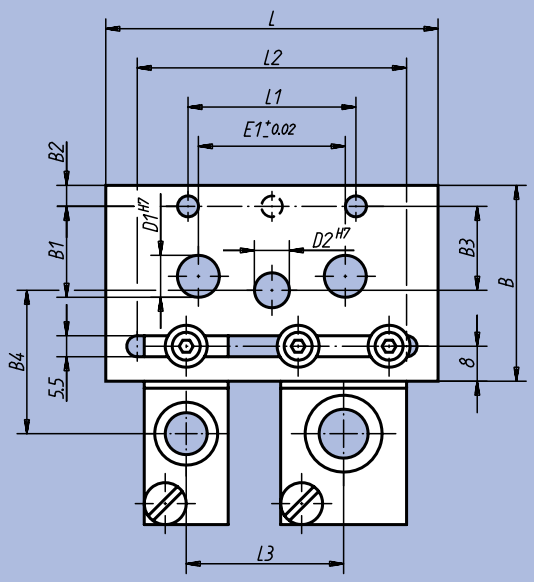

Drill bush support

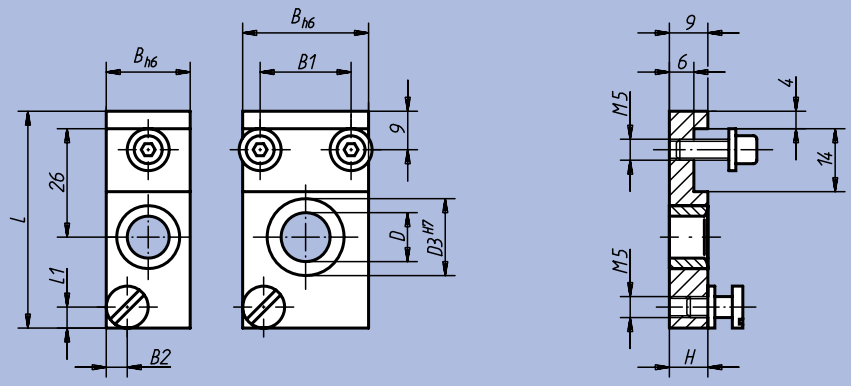

smallest spacing between holes L3 = $\frac{1^{st}\text{ drill bush support (dimension B)} + 2^{nd}\text{ drill bush support (dimension B)}}{2}$

Order No.	Surface finish	Suitable for size of lathe-work drill clamp	D1	D2	E1	L	L1	L2	B	B1	B2	B3	B4	B5 Drill bush carrier Sizes 1 and 2	B5 Drill bush carrier Sizes 3 to 8	B6	H	kg
08650-00	drill bush support plate	0	-	9	-	80	40	64	47	-	5	20	35	66	82	5	14	0,308
08650-02	drill bush support plate	2	16	16	50	120	80	100	68	26	4	30	47	87	113	17	19	0,950

Order No.	Surface finish	Size	D usable drill bushes	D Drill bushes usable from	D Drill bushes usable to	D3	L	L1	B	B1	B2	H	kg
08650-10	drill bush support	1	-	0,4	3,3	3	36	-	8	-	-	10	0,020
08650-12	drill bush support	2	-	3,4	6	4	36	-	12	-	-	10	0,030
08650-13	drill bush support	3	-	6,1	10	4	52	-	20	-	-	10	0,075
08650-14	drill bush support	4	-	10,1	15	4	52	-	30	20	-	10	0,115
08650-15	drill bush support	5	8*	-	-	-	52	5	20	-	5	10	0,072
08650-16	drill bush support	6	10*	-	-	-	52	5	20	-	5	12	0,079
08650-17	drill bush support	7	12*	-	-	-	52	5	30	20	5	12	0,120
08650-18	drill bush support	8	15*	-	-	-	52	5	30	20	5	12	0,121

V-blocks

with stop



Material:
V-blocks 1.0531; jaw in steel

Surface finish:
Natural finish; jaws black oxide finish and ground

Sample order:
nlm 08710-02

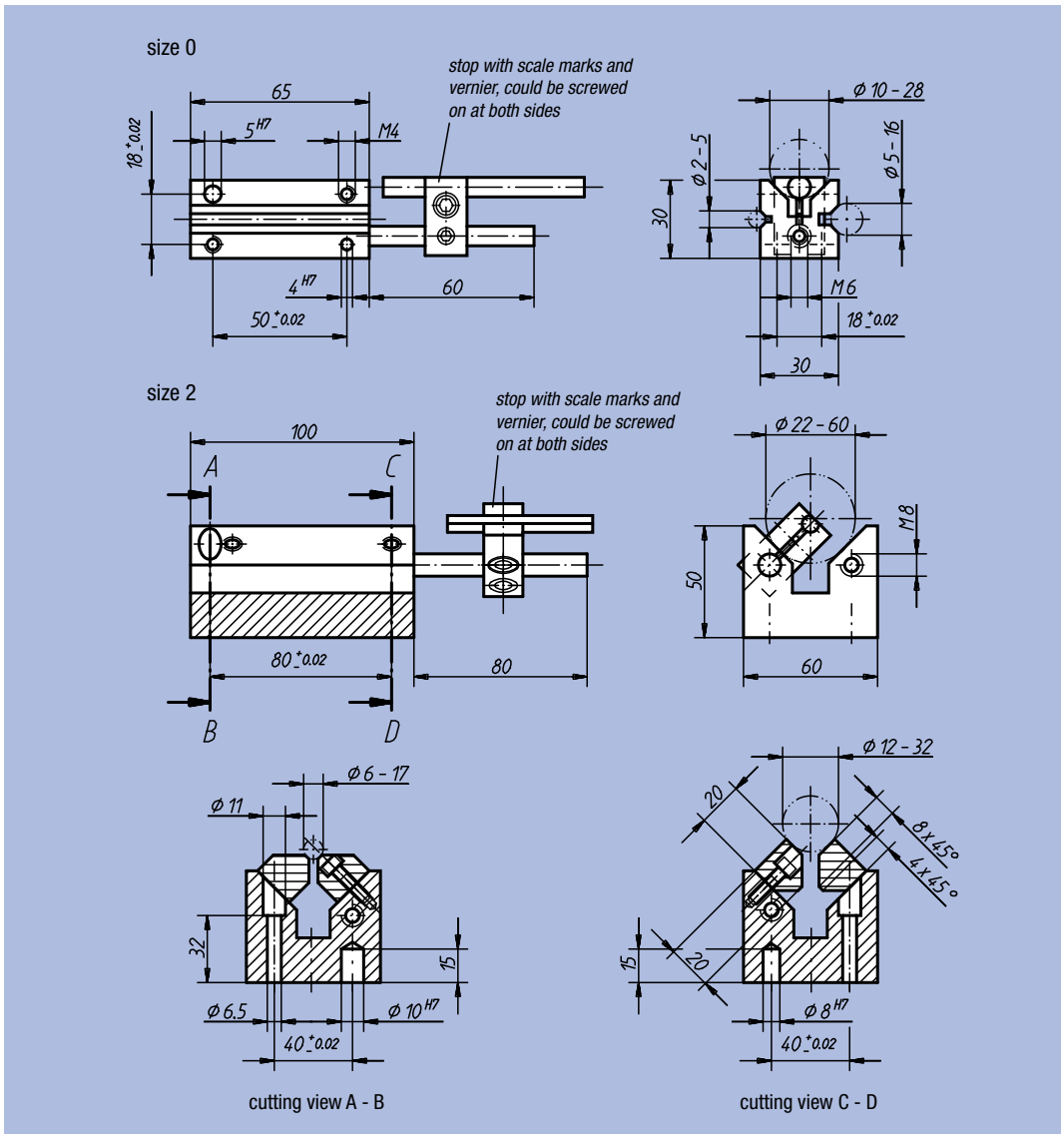

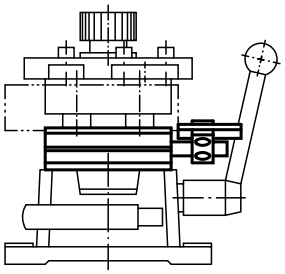

Order No.	Suitable for size of lathe-work drill clamp	kg
08710-00	0	0,390
08710-02	2	2,250

Cylindrical Drill Bushes

DIN 179



Material:
Special hardened steel

Surface finish:
Hardened and ground;
hardness 740 ±80 HV, quality class 10

Sample order:
nlm 08900-A0125X06
(Cylindrical Drill Bush Form A with
D1 = 1,25 mm and L = 6 mm)

Form A
hole, rounded at one end

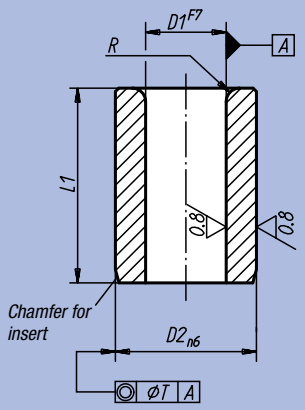

Form B
hole, rounded at both ends

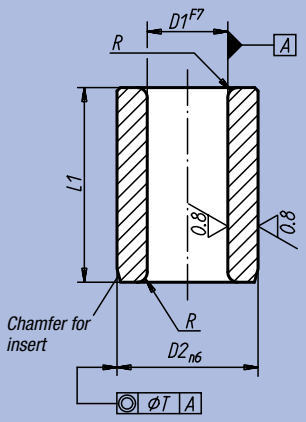

D1	D2	L1 short	L1 medium	L1 long	R	T
from 0,4 up to 0,8	3	-	6	-	1	0,01
from 0,9 up to 1,0	3	6	9	-	1	0,01
from 1,1 up to 1,8	4	6	9	-	1	0,01
from 1,9 up to 2,6	5	6	9	-	1	0,01
from 2,7 up to 3,3	6	8	12	16	1	0,01
from 3,4 up to 4,0	7	8	12	16	1	0,01
from 4,1 up to 5,0	8	8	12	16	1	0,01
from 5,1 up to 6,0	10	10	16	20	1,5	0,02
from 6,1 up to 8,0	12	10	16	20	1,5	0,02
from 8,1 up to 10,0	15	12	20	25	2	0,02
from 10,1 up to 12,0	18	12	20	25	2	0,02
from 12,1 up to 15,0	22	16	28	36	2	0,02
from 15,1 up to 18,0	26	16	28	36	2	0,02
from 18,1 up to 22,0	30	20	36	45	3	0,02
from 22,1 up to 26,0	35	20	36	45	3	0,02
from 26,1 up to 30,0	42	25	45	56	3	0,02
from 30,1 up to 35,0	48	25	45	56	3	0,04
from 35,1 up to 42,0	55	30	56	67	3,5	0,04
from 42,1 up to 48,0	62	30	56	67	3,5	0,04

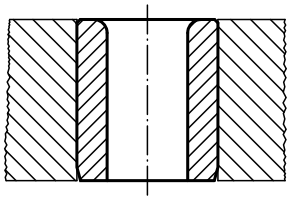

Drill Bushes with collar

DIN 172



Material:
Special hardened steel

Surface finish:
Hardened and ground;
hardness 740 ±80 HV, quality class 10

Sample order:
nlm 08910-A1025X20
(Drill Bush with collar Form A with
D1 = 10,25 mm and L1 = 20 mm)

Form A
hole, rounded at one end

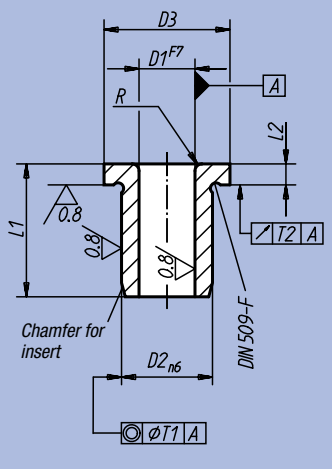

Form B
hole, rounded at both ends

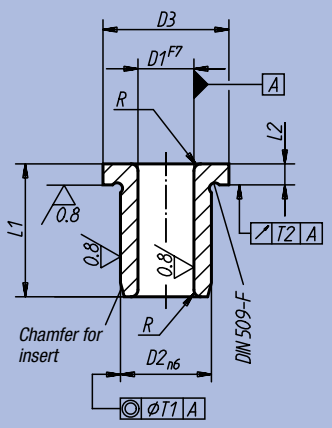

D1	D2	D3	L1 short	L1 medium	L1 long	L2	R	T1	T2
from 0,4 up to 0,8	3	6	-	6	-	2	1	0,01	0,03
from 0,9 up to 1,0	3	6	6	9	-	2	1	0,01	0,03
from 1,1 up to 1,8	4	7	6	9	-	2	1	0,01	0,03
from 1,9 up to 2,6	5	8	6	9	-	2	1	0,01	0,03
from 2,7 up to 3,3	6	9	8	12	16	2,5	1	0,01	0,03
from 3,4 up to 4,0	7	10	8	12	16	2,5	1	0,01	0,03
from 4,1 up to 5,0	8	11	8	12	16	2,5	1	0,01	0,03
from 5,1 up to 6,0	10	13	10	16	20	3	1,5	0,02	0,03
from 6,1 up to 8,0	12	15	10	16	20	3	1,5	0,02	0,03
from 8,1 up to 10,0	15	18	12	20	25	3	2	0,02	0,03
from 10,1 up to 12,0	18	22	12	20	25	4	2	0,02	0,03
from 12,1 up to 15,0	22	26	16	28	36	4	2	0,02	0,03
from 15,1 up to 18,0	26	30	16	28	36	4	2	0,02	0,03
from 18,1 up to 22,0	30	34	20	36	45	5	3	0,02	0,03
from 22,1 up to 26,0	35	39	20	36	45	5	3	0,02	0,05
from 26,1 up to 30,0	42	46	25	45	56	5	3	0,02	0,05
from 30,1 up to 35,0	48	52	25	45	56	5	3	0,04	0,05
from 35,1 up to 42,0	55	59	30	56	67	5	3,5	0,04	0,05
from 42,1 up to 48,0	62	66	30	56	67	6	3,5	0,04	0,05

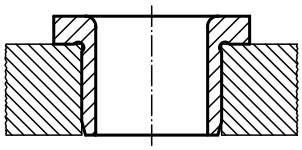

Removable Drill Bushes

DIN 173



Material:
Special hardened steel

Surface finish:
Hardened and ground; hardness 780 ±40 HV, quality class 10; with no introduction groove

Sample order:
nlm 08920-A1000X15
(Removable Drill Bush Form A with D1 = 10 mm and D2 = 15 mm, cylindrical pin assembled)

Note:
All removable drill bushes have the hole dimension inscribed on the upper edge of the collar, e.g. 10.
The flat-head screw DIN 173 Part 1 is used as the counter-locator.

Form A

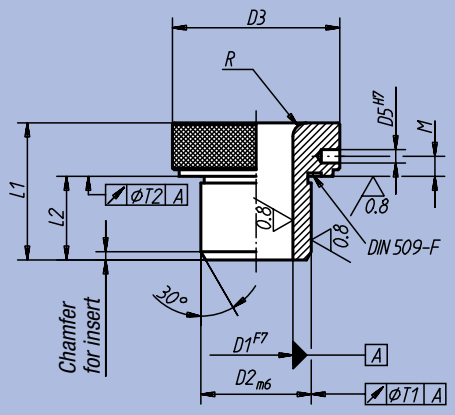

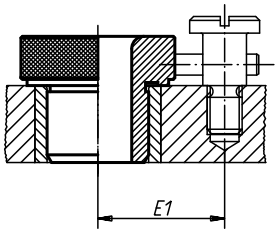

D1	D2	D3	D5	M	L1	L2	Distance E1 up to the centre of the retaining screw	R	T1	T2
from 2,5 up to 4,0	8	16	2,5	4	20	10	15	3	0,02	0,005
from 4,1 up to 6,0	10	19	2,5	4	22	12	16,5	3	0,02	0,005
from 6,1 up to 8,0	12	22	3	4	24	12	19,5	4	0,02	0,005
from 8,1 up to 10,0	15	26	3	4	28	16	21,5	5	0,02	0,005
from 10,1 up to 12,0	18	30	3	4	28	16	23,5	5	0,02	0,005
from 12,1 up to 15,0	22	35	5	5	36	20	28	5	0,02	0,005
from 15,1 up to 18,0	26	40	5	5	36	20	30,5	5	0,02	0,005
from 18,1 up to 22,0	30	47	5	5	36	20	34	6	0,02	0,005
from 22,1 up to 26,0	35	55	6	6	45	25	38	6	0,04	0,008
from 26,1 up to 30,0	42	62	6	6	45	25	41,5	6	0,04	0,008
from 30,1 up to 35,0	48	69	6	6	50	30	45	8	0,04	0,008
from 35,1 up to 42,0	55	77	6	6	50	30	49	8	0,04	0,008
from 42,1 up to 48,0	62	85	8	7,5	55	35	53	8	0,04	0,008

Removable Drill Bushes

DIN 173, part 1



Material:
Special hardened steel

Surface finish:
Hardened and ground; hardness 780 ±40 HV, quality class 10

Sample order:
nlm 08920-K0400X16
(Removable Drill Bush, Form K with D1 = 4 mm and L1 = 16 mm)

Note:
All removable drill bushhes have the hole dimension and the half-length dimension inscribed on the upper surface of the collar, e.g. 15 F7.
The Form K removable drill bush is used as a quich-change bush.
Cylindrical pins or spiral clamping pins in conjunction with flat-head screws to DIN 173 Part 1 are used as the counter-locator for the stop pin.
The bayonet lock is secured by clamping bushes to DIN 173 Part 1 in conjunction with cylinder bolts to DIN 912.

E2 = Drill spacing should cylindrical pins or spiral clamping pins be used.

Form K
quick-change bush for
right-hand cutting tools

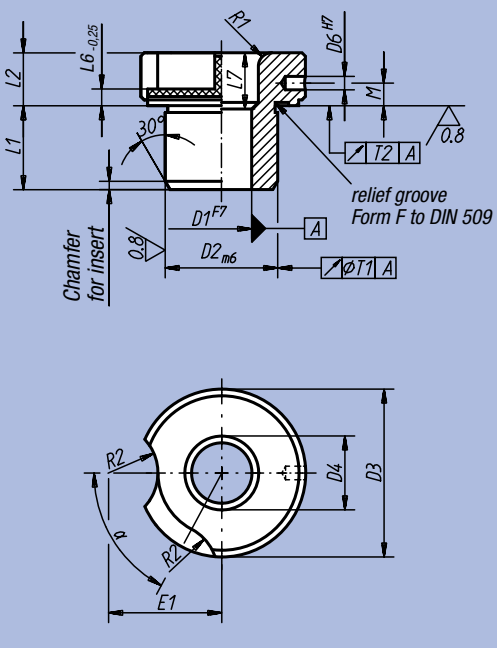

Form L
exchangeable bush

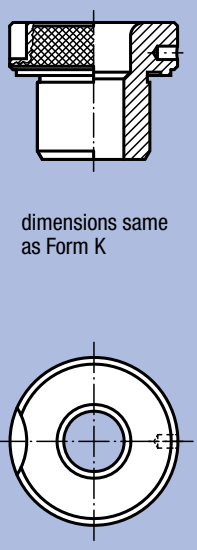

dimensions same
as Form K

application example:

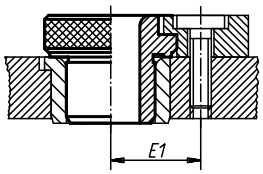

Quick-change bush Form K
with Drill Bush with collar
to DIN 172 or Drill Bush to DIN 179

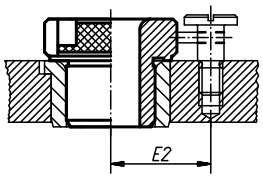

Quick-change bush Form K
with Drill Bush with collar
to DIN 172 or Drill Bush to DIN 179

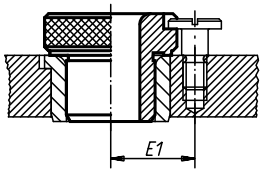

Exchangeable Bush Form L
with Drill Bush with collar
to DIN 172 or Drill Bush to DIN 179

D1	D2	L1 short	L1 medium	L1 long	D3	D4 for short and long	D6	L2	L6	L7 medium	L7 long	M	T1	T2	R1	R2	E1	E2	α
from 2,4 up to 4,0	8	10	16	-	15	D1 +0,5	2,5	8	3	6	-	4,25	0,02	0,005	1,5	7	11,5	15	65°
from 4,1 up to 6,0	10	12	20	25	18	D1 +0,5	2,5	8	3	8	13	4,25	0,02	0,005	2	7	13	17	65°
from 6,1 up to 8,0	12	12	20	25	22	D1 +0,5	3	10	4	8	13	6	0,02	0,005	2	8,5	16,5	20	60°
from 8,1 up to 10,0	15	16	28	36	26	D1 +0,5	3	10	4	12	20	6	0,02	0,005	2	8,5	18	22	50°
from 10,1 up to 12,0	18	16	28	36	30	D1 +0,5	3	10	4	12	20	6	0,02	0,005	2	8,5	20	24	50°
from 12,1 up to 15,0	22	20	36	45	34	D1 +0,5	5	12	5,5	16	25	7	0,02	0,005	3	10,5	23,5	28	35°
from 15,1 up to 18,0	26	20	36	45	39	D1 +1,0	5	12	5,5	16	25	7	0,02	0,005	3	10,5	26	31	35°
from 18,1 up to 22,0	30	25	45	56	46	D1 +1,0	5	12	5,5	20	31	7	0,02	0,005	3	10,5	29,5	35	30°
from 22,1 up to 26,0	35	25	45	56	52	D1 +1,0	6	12	5,5	20	31	7	0,04	0,008	3	10,5	32,5	37	30°
from 26,1 up to 30,0	42	30	56	67	59	D1 +1,0	6	12	5,5	26	37	7	0,04	0,008	3	10,5	36	41	30°

Clamping bushes

DIN 173, part 1



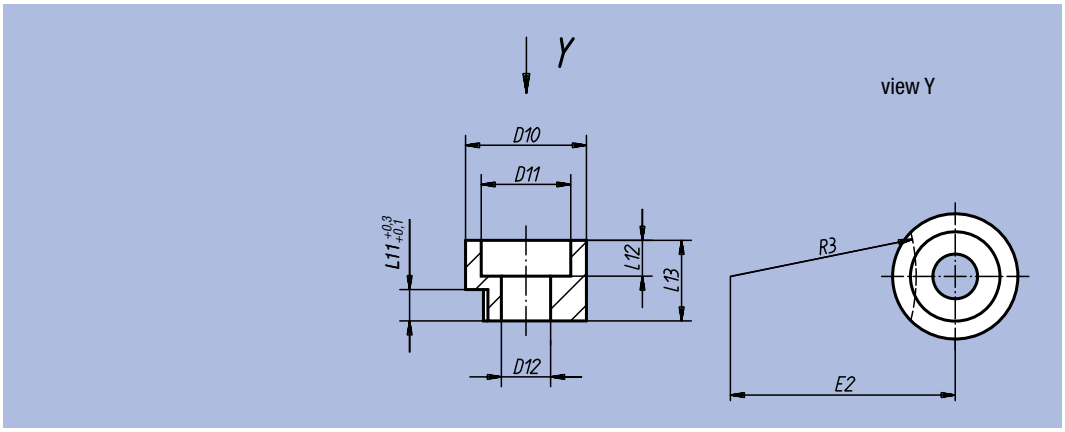

Material:
Clamping bush 1.0711;
socket head screw in steel

Surface finish:
Natural finish

Sample order:
nlm 08926-061X10 (clamping bush with D12 = 6,1 mm and L13 = 10 mm)

Note:
A socket head screw to DIN 912 is supplied.

Order No.	D12	for removable guides (D1)	D10	D11	L11	L12	L13	E2	R3	Socket head screw DIN 912
08926-051X08	5,1	up to 6,0	13	10	3	4	8	13,2	9,5	M5x16
08926-061X10	6,1	over 6,0 up to 12,0	16	12	4	5	10	19,7	15	M6x20
08926-081X12	8,1	over 12,0 up to 30,0	20	15	5,5	5	12	36,2	30	M8x25

Shoulder Screws with slotted flat head

for removable drill bushes DIN 173



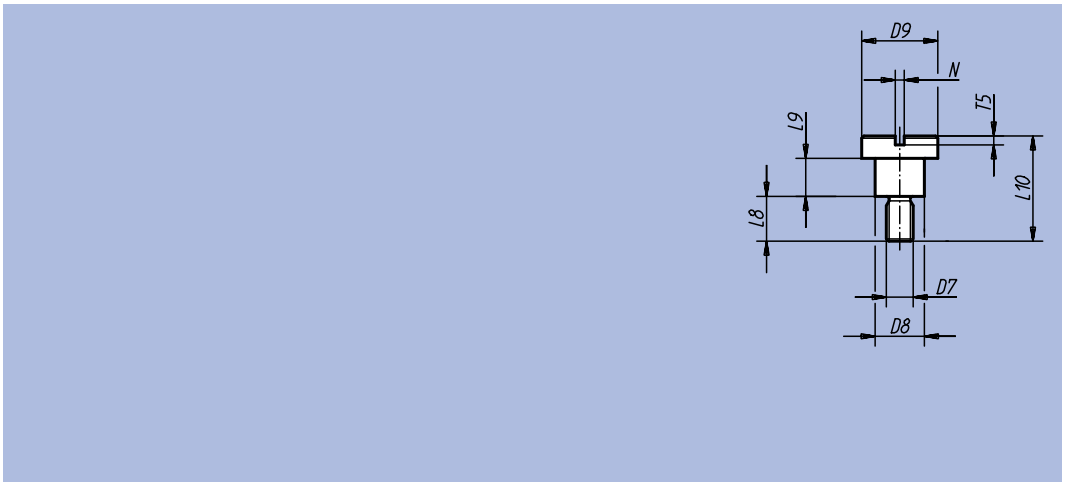

Material:
Steel

Surface finish:
Natural finish, quality class 10.9

Sample order:
nlm 08927-06X04 (Shoulder Screw with slotted flat head DIN 173 part 1 with D7 = M6 and L9 = 4 mm)

Order No.	Surface finish	D7	for removable guides (D1)	L8	L9	L10	D8	D9	N	T5
08927-05X03	short	M5	up to 6,0	9	3	15	7,5	13	1,6	2
08927-06X04	short	M6	over 6,0 up to 12,0	10	4	18	9,5	16	2	2,5
08927-08X55	short	M8	over 12,0 up to 30,0	11,5	5,5	22	12	20	2,5	3
08927-05X06	long	M5	up to 6,0	9	6	18	7,5	13	1,6	2
08927-06X08	long	M6	over 6,0 up to 12,0	10	8	22	9,5	16	2	2,5
08927-08X105	long	M8	over 12,0 up to 30,0	11,5	10,5	27	12	20	2,5	3

09000

Magnets



Permanent Magnetic Clamps

with fine and finest pole division



Sample order:
nlm 09060-2020

Note:
Our clamping blocks 09060-2010 to 09060-2030 consist of a permanent system of magnets with narrow pole divisions, which acts on two or three surfaces (pole division 4 mm).
To clamp extremely thin steel pieces we recommend clamping block 09060-2040 with a fine pole division of 1.3 mm. The magnetic lifespan of the clamping blocks is unlimited under the conditions prevailing in industrial manufacturing.
Approximately half the height of the clamping blocks can be ground down or polished with no significant impairment of the adhesive force.

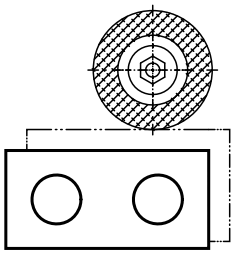

09060-2010

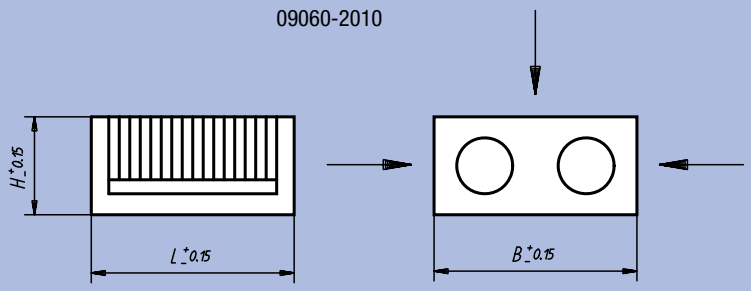

09060-2020

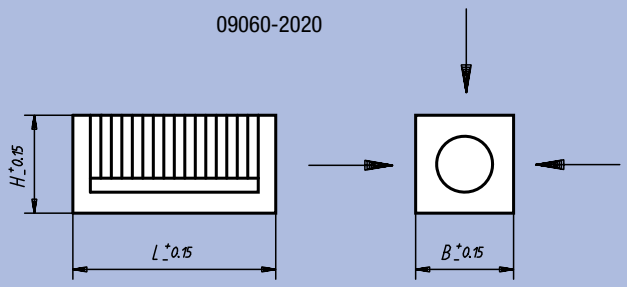

09060-2030
09060-2040

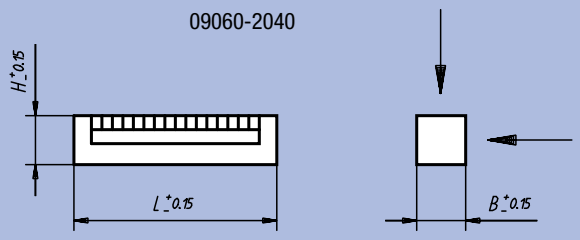

Order No.	L	B	H	Max. angular deviation	Adhesive surface mm	kg
09060-2010	100	100	50	10′	1 surface 100x100 2 surfaces 100x50	3,2
09060-2020	100	50	50	10′	3 surfaces 100x50	1,6
09060-2030	100	25	25	10′	2 surfaces 100x25	0,4
09060-2040	100	25	25	10′	2 surfaces 100x25	0,4

Technical data for holding magnets (gripper magnets)

Structure:
Gripper magnets are magnetic systems which have only one adhesive surface due to their structure. No magnetic force is radiated by any of the other surfaces of the gripper magnet body.
This structural form enables the spatial effect of the magnetic field to be limited so that the whole of the part in contact with the gripper magnets or the machine parts surrounding the gripper magnets are not magnetised.

Structural forms:
Round-bar gripper magnets of the series
09060-01 to 09060-10
09061-01 to 09061-09
09063-01 to 09063-10
have a core of AlNiCo permanently magnetised material OERSTIT-500 which for purposes of magnetic screening is in a pot of soft iron encased in a sleeve of a nonmagnetic material.
The ceramic permanent magnet material OXIT 300 is used for flat gripper magnets of the series
09064-01 to 09064-10 and
09065-01 to 09065-26.
A pot of soft iron also provides for the required magnetic screening in this case.
Magnets in the series
09066-01 to 09066-18 and
09067-01 to 09067-15
consist of a SECOLIT core, an alloy or rare metallic ores with cobalt.
Compared with OERSTIT or OXIT grippers, SECOLIT grippers increase the adhesive force by a factor of three to five for the same size.

Adhesive forces:
The adhesive forces specified in the tables are minimum values, which are achieved with the magnets having a vertical shear and full surface contact with work pieces of sufficient strength in soft iron or low-carbon steel.
Air spaces form where the pole surfaces are unclean, as a result of which the adhesive force is greatly reduced. It is recommended that a clean pole surface be assured and the should be cleaned from time to time.

Diagram:
Reduction in the adhesive force of a bar gripper with an increasing air gap (magnetically non-conducting intermediate layers act as air gaps).

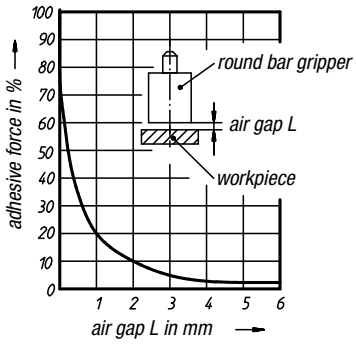

Fixing instructions for screened gripper magnets with no pins

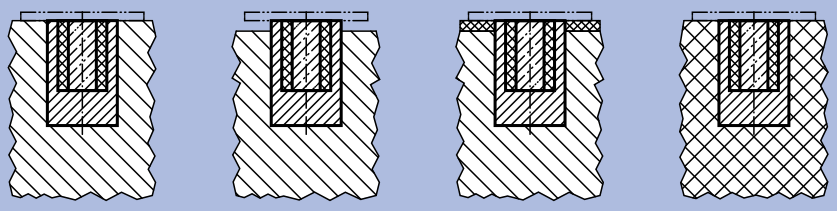

incorrect correct correct correct

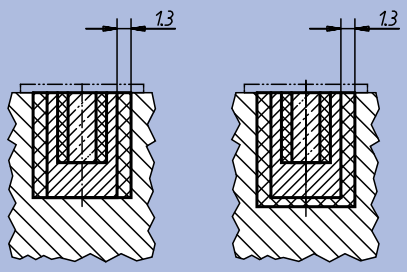

incorrect correct

Holding magnets (round bar and flat grippers must not be used directly in iron, but must be bolted, glued, pressed or poured into a sleeve of non-magnetic material (see representation opposite)

Gripper magnets - Series type
09060-01 to 09060-10

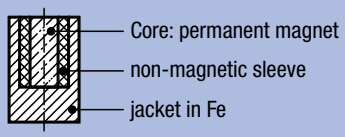

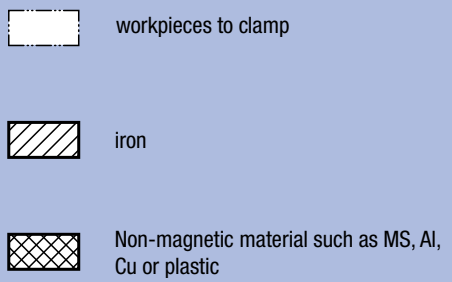

Fitting or assembly configurations of gripper magnets

Order No.	Description	System	Temperature* max. °C	Assembly configuration
from 09060-01 to 09060-10	Round bar gripper	shielded	450	press in/shrinking/gluing
from 09061-01 to 09061-09	Round bar gripper	shielded	450	solder in (soft solder) gluing
from 09063-01 to 09063-10	Round bar gripper	shielded	450	rivet of pin/screw in
from 09067-01 to 09067-15	Round bar gripper	shielded	200	press in/gluing/screw in
from 09064-01 to 09064-10	Flat gripper	shielded	100	press in/gluing
from 09065-01 to 09065-26	Flat gripper	shielded	100	screw in
from 09066-01 to 09066-18	Flat gripper	shielded	200	press in/gluing

* Long-term heating or alternating thermal stresses can result in mechanical changes to the system of magnet under certain circumstances. In many cases they have no effect on the function. The same also applies to the case of chemical stresses (chemical baths, aggressive gases, etc.).

Round Holding Magnets (Round bar gripper)

in Oerstit



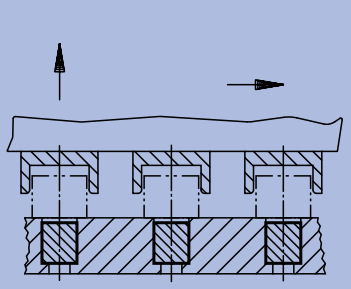

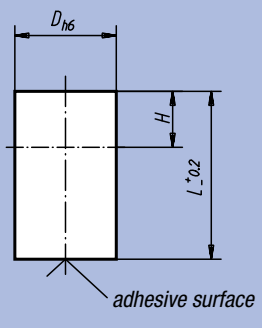

Surface finish:
Smooth round bar gripper with fitting tolerance, shielded system, application temperature up to 450 °C

Sample order:
nlm 09060-08

Note:
Round holding magnets are pressed, squeezed or glued into location holes.

Round bar grippers can be shortened by the dimension “H“ with no loss of adhesive force.

Order No.	D	L	H	Adhesive force N	g
09060-01	6	10	2	1	2
09060-02	8	12	3	2,5	4
09060-03	10	16	6	5	9
09060-04	13	18	7	8	17
09060-05	16	20	5	15	29
09060-06	20	25	6	35	57
09060-07	25	30	5	80	110
09060-08	32	35	3	150	200
09060-09	40	45	5	200	420
09060-10	50	50	2	355	720

Round Holding Magnets (Round bar gripper)

in Oerstit



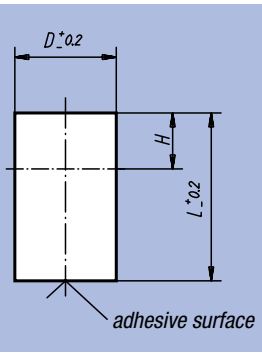

Surface finish:
Smooth round bar gripper without fitting tolerance, shielded system, surface galvanized, application temperature up to 450 °C

Sample order:
nlm 09061-01

Note:
Round bar grippers can be shortened by the dimension “H“ with no loss of adhesive force.

Order No.	D	L	H	Adhesive force N	g
09061-01	6	20	12	1	4
09061-02	8	20	11	2,5	7
09061-03	10	20	10	5	11
09061-04	13	20	9	8	19
09061-05	16	20	5	15	29
09061-06	20	25	6	35	57
09061-07	25	35	10	80	140
09061-08	32	40	8	150	240
09061-09	40	50	10	200	500

Round Holding Magnets with pin (Round bar gripper)

in Oerstit



Surface finish:
Round bar gripper with smooth pin, shielded system, surface galvanized, application temperature up to 450 °C

Sample order:
nlm 09063-10

Note:
Round bar grippers can be shortened by the dimension "H" with no loss of adhesive force.

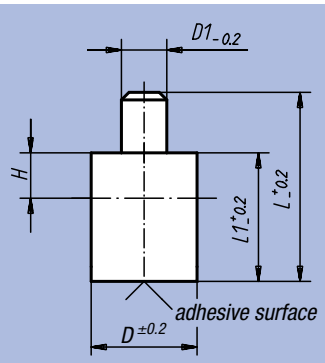

Order No.	D	D1	L	L1	H	Adhesive force N	g
09063-01	6	3	28	20	2	1	4
09063-02	8	3	28	20	3	2,5	7
09063-03	10	4	28	20	6	5	12
09063-04	13	4	28	20	7	8	20
09063-05	16	5	28	20	5	15	30
09063-06	20	6	33	25	6	35	60
09063-07	25	8	45	35	5	80	140
09063-08	32	10	50	40	3	150	240
09063-09	40	15	70	50	5	200	250
09063-10	50	18	85	60	2	350	950

Flat Holding Magnets (Flat gripper)

in Oxit



Surface finish:
Flat gripper without threaded bush, surface galvanized, shielded system, application temperature up to 200 °C

Sample order:
nlm 09064-05

Note:
Flat holding magnets are pressed or glued into location holes.
Hairline cracks in the built-in magnetic material with the version 09064-10 are unavoidable for technical reasons. They do not impair the function of the adhesive magnets in any way.

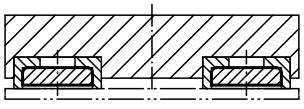

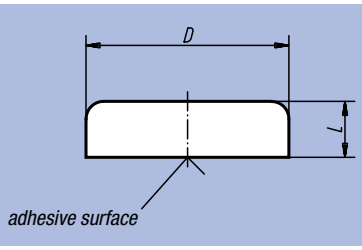

Order No.	D	L	Adhesive force N	g
09064-01	10 ±0,15	4,5	4	3
09064-02	13 ±0,15	4,5	10	5
09064-03	16 ±0,15	4,5	18	6
09064-04	20 ±0,15	6	30	10
09064-05	25 ±0,15	7	40	17
09064-06	32 ±0,20	7	80	28
09064-07	40 ±0,20	8	125	52
09064-08	50 ±0,20	10	220	100
09064-09	63 ±0,20	14	350	220
09064-10	80 ±0,25	18	600	460

Flat Holding Magnets with thread (Flat gripper)

in Oxit



Surface finish:
Shielded system, surface galvanized, application temperature up to 200 °C

Sample order:
nlm 09065-08

Note:
Hairline cracks in the built-in magnetic material with the versions 09065-10, 09065-11 and 09065-12 are unavoidable for technical reasons. They do not impair the function of the adhesive magnets in any way.

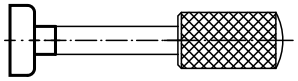

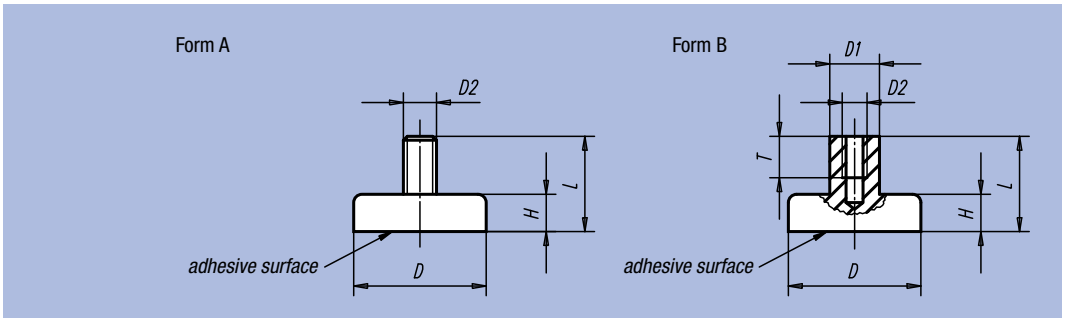

Order No. Form A	Order No. Form B	D	D1	D2	L	H	T	Adhesive force N	g
09065-21	09065-01	10 ±0,15	6	M3	11,5	4,5 ±0,10	5	4	5
09065-22	09065-02	13 ±0,15	6	M3	11,5	4,5 ±0,10	5	10	5
09065-23	09065-03	16 ±0,15	6	M3	11,5	4,5 ±0,10	5	18	8
09065-24	09065-04	20 ±0,15	6	M3	13	6 ±0,10	5	30	12
09065-25	09065-05	25 ±0,15	8	M4	15	7 ±0,10	6	40	19
09065-26	09065-06	32 ±0,20	8	M4	15	7 ±0,15	6	80	31
-	09065-07	40 ±0,20	10	M5	18	8 ±0,15	8	125	55
-	09065-08	50 ±0,20	12	M6	22	10 ±0,15	10	220	105
-	09065-09	63 ±0,20	15	M8	30	14 ±0,15	14	350	230
-	09065-10	80 ±0,25	20	M10	34	18 ±0,20	14	550	470
-	09065-11	100 ±0,25	22	M12	42	22 ±0,20	17	900	920
-	09065-12	125 ±0,25	25	M14	50	26 ±0,20	20	1300	1700

Flat Gripper

in Secolit (Samarium Cobalt)



Surface finish:
Flat gripper, shielded system, application temperature up to 200 °C

Sample order:
nlm 09066-08

Note:
Secolit grippers have three to five times the adhesive force of Oerstit or Oxit grippers.

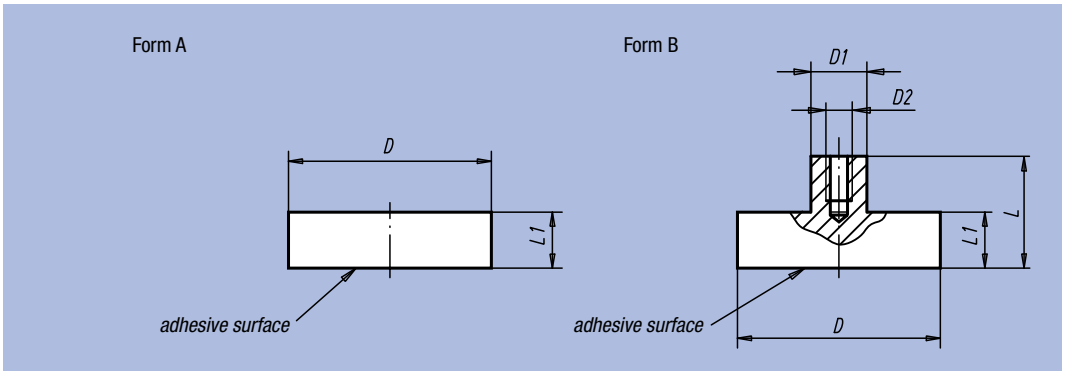

Order No. Form A	Order No. Form B	D	D1	D2	L	L1	Adhesive force N	g
09066-01	09066-11	6 ±0,15	6	M3	11,5	4,5	5	1,0
09066-02	09066-12	8 ±0,15	6	M3	11,5	4,5	11	2,0
09066-03	09066-13	10 ±0,15	6	M3	11,5	4,5	20	3,0
09066-04	09066-14	13 ±0,15	6	M3	11,5	4,5	40	5,0
09066-05	09066-15	16 ±0,15	6	M4	11,5	4,5	60	6,5
09066-06	09066-16	20 ±0,15	8	M4	13	6	90	14,5
09066-07	09066-17	25 ±0,15	8	M4	14	7	150	27,0
09066-08	09066-18	32 ±0,20	10	M5	15,5	7	220	44,0

Round Bar Gripper

in Secolit (Samarium Cobalt)



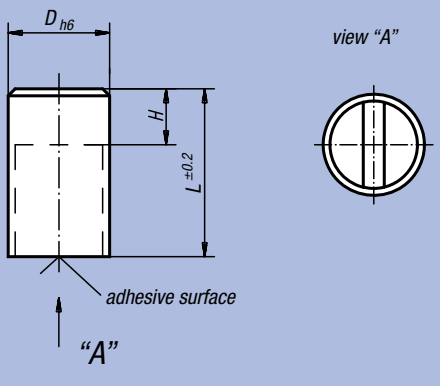

Surface finish:
Smooth surface, with fitting tolerance, application temperature up to 200 °C

Sample order:
nlm 09067-11

Note:
Under no circumstances must Secolit grippers be pressed directly into iron, as otherwise loss of adhesive force occurs as a result of magnetic short circuits. Secolit gripper magnets are especially suitable for direct use in spot-welding machines, as no demagnetisation occurs.

Round bar grippers can be shortened by the dimension "H" with no loss of adhesive force.

Order No.	D	L	H	Adhesive force N	Distance to iron wall/mm	≙ g
09067-01	6	20	10	8	1,5	4
09067-03	8	20	10	22	1,5	8
09067-05	10	20	8	40	2	12
09067-07	13	20	6	60	2,5	20
09067-09	16	20	2	125	3	32
09067-11	20	25	5	230	4	60
09067-13	25	35	7	400	5	138
09067-15	32	40	4,5	600	6	261

Round Holding Magnets with internal thread (Round bar gripper)



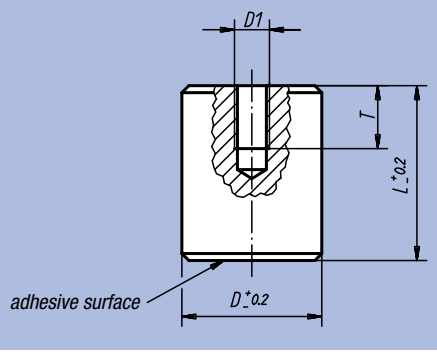

Surface finish:
Magnet systems with galvanized metal sheath and a metric internal thread on the rear side; application temperature up to approx. 80 °C

Sample order:
nlm 09068-08

Note:
Bar grippers are used for fitting into steel and iron.
This requirement is principally specified in plant and mechanical engineering.
Can also be used as blind-hole magnets.

09068-08: System having 4 magnets of Ø 18 mm.

Order No.	D	D1	L	T	Can be shortened by	Adhesive force N	≙ g
09068-01	8	M3	12	5	7	12	7
09068-02	10	M4	16	7	11	24	8
09068-03	13	M4	18	7	13	60	18
09068-04	16	M4	20	7	15	90	30
09068-05	20	M5	25	9	18	135	60
09068-06	25	M6	30	9	22	190	110
09068-07	35	M8	40	13	32	300	290
09068-08	50	M12	50	13	43	550	750

Flat Gripper

in Neodymium



Surface finish:
Flat gripper, shielded system, application temperature up to 80 °C

Sample order:
nlm 09069-08

Note:
With the permanent magnetic material Neodymium the adhesive force increases by approx. 10-20% compared with Secolit.

Form A

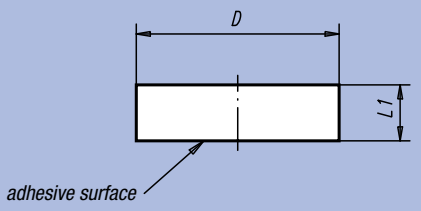

Form B

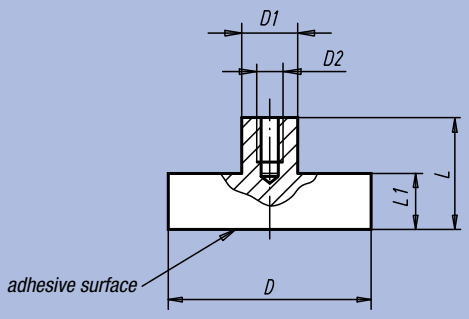

Form C

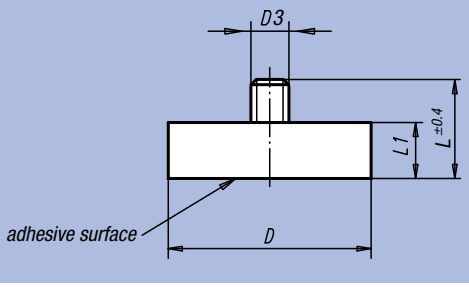

Order No.	Form	D	D1	D2	D3	L	L1	Adhesive force N
09069-01	A	6 ±0,15	-	-	-	-	4,5	5
09069-02	A	8 ±0,15	-	-	-	-	4,5	13
09069-03	A	10 ±0,15	-	-	-	-	4,5	25
09069-04	A	13 ±0,15	-	-	-	-	4,5	60
09069-05	A	16 ±0,15	-	-	-	-	4,5	95
09069-06	A	20 ±0,15	-	-	-	-	6	140
09069-07	A	25 ±0,15	-	-	-	-	7	200
09069-08	A	32 ±0,20	-	-	-	-	7	350
09069-11	B	6 ±0,15	6	M 3	-	11,5	4,5	5
09069-12	B	8 ±0,15	6	M 3	-	11,5	4,5	13
09069-13	B	10 ±0,15	6	M 3	-	11,5	4,5	25
09069-14	B	13 ±0,15	6	M 3	-	11,5	4,5	60
09069-15	B	16 ±0,15	6	M 4	-	11,5	4,5	95
09069-16	B	20 ±0,15	8	M 4	-	13	6	140
09069-17	B	25 ±0,15	8	M 4	-	14	7	200
09069-18	B	32 ±0,20	10	M 5	-	15,5	7	350
09069-23	C	10 ±0,15	-	-	M 3	11,5	4,5	25
09069-24	C	13 ±0,15	-	-	M 5	12,5	4,5	60
09069-25	C	16 ±0,15	-	-	M 6	12,5	4,5	95
09069-26	C	20 ±0,15	-	-	M 6	16	6	140
09069-27	C	25 ±0,15	-	-	M 6	17	7	200
09069-28	C	32 ±0,20	-	-	M 6	17	7	350

Flat Gripper with through hole

in Oxit



Surface finish:
Shielded system, surface galvanized, application temperature up to 200 °C
Sample order:
nlm 09070-50

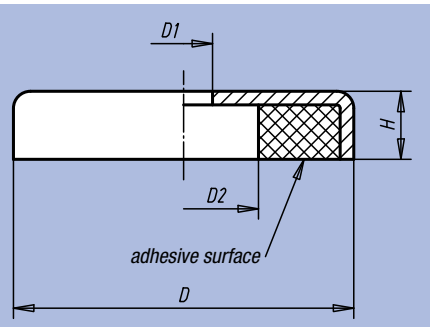

Order No.	D	D1	D2	H	Adhesive force N	g
09070-50	50 ±0,20	8,5	22	10	180	90
09070-63	63 ±0,20	6,5	24	14	290	195
09070-80	80 ±0,25	6,5	11,5	18	540	478

Flat Gripper with counterbore

in Oxit



Surface finish:
Shielded system, surface galvanized, application temperature up to 200 °C
Sample order:
nlm 09071-04

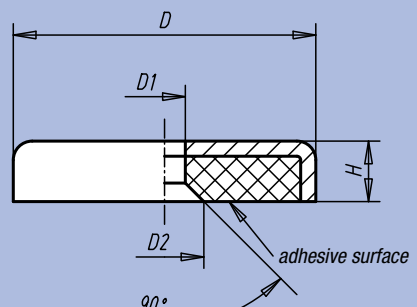

Order No.	D	D1	D2	H	Adhesive force N	g
09071-01	16 ±0,15	3,5	6,5	4,5	14	4
09071-02	20 ±0,15	4,2	8,6	6	27	9
09071-03	25 ±0,15	5,5	10,4	7	36	16
09071-04	32 ±0,20	5,5	10,4	7	72	27
09071-05	40 ±0,20	5,5	10,4	8	90	53

Flat Gripper with internal thread

in Neodymium



Surface finish:
Shielded system, application temperature up to 80 °C

Sample order:
nlm 09072-04

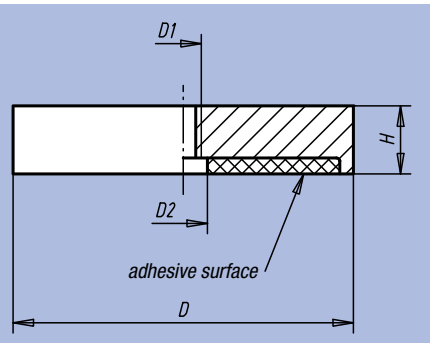

Order No.	D	D1	D2	H	Adhesive force N	g
09072-01	32	M5	5,5	7	330	40
09072-02	40	M5	10,5	8	550	73
09072-03	63	M10	11,7	14	1100	316
09072-04	75	M10	13	15	1750	480

Pot Magnets



Surface finish:
Hard magnet in aluminium housing and steel sheath, surface red structure coated, application temperature up to 450 °C

Sample order:
nlm 09094-05

Note:
Top magnets are used for holding fast, for lifting and for fitting into devices.

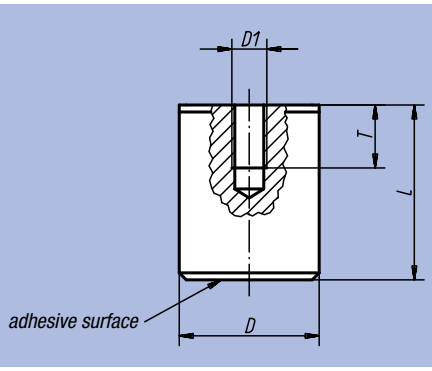

Order No.	D	D1	L	T	Adhesive force N	g
09094-01	17	M6	16	4	18	30
09094-02	21	M6	19	5	28	40
09094-03	27	M6	25	6	65	100
09094-04	35	M6	30	9	115	200
09094-05	65	M12	43	13	400	1000

Flat Pot Magnets



Surface finish:
Strong magnet with steel sheath and through hole, surface red structure coated, application temperature up to 450 °C

Sample order:
nlm 09096-03

Note:
Flat top magnets are used where space is scarce for fitting into devices. Other colours available on request.

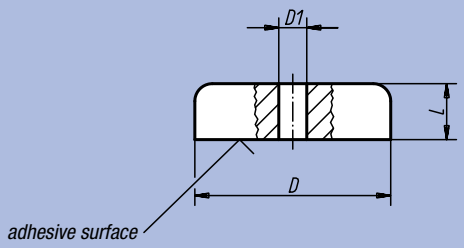

Order No.	D	D1	L	Adhesive force N	g
09096-01	19	3,5	8	16	25
09096-02	29	5	9	55	50
09096-03	38	5	10,5	95	90

Button Magnets



Surface finish:
Split adhesive surface with through fastening hole, surface red structure coated, application temperature up to 450 °C

Sample order:
nlm 09098-04

Note:
Button magnets with a divided adhesive surface are used for laboratory purposes and to hold metal objects still.

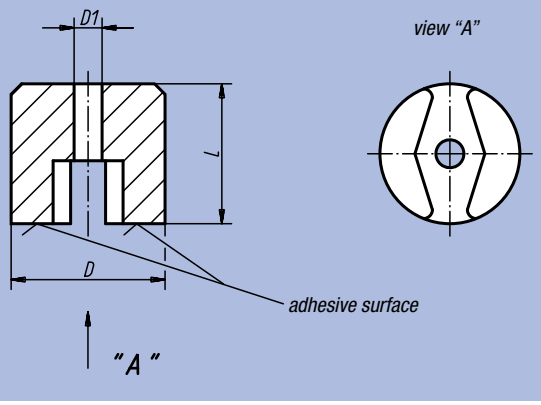

Order No.	D	D1	L	Adhesive force N	g
09098-01	13	4,2	10	7	10
09098-02	19	5,4	13	19	20
09098-03	25	5,4	16	29	50
09098-04	32	7	25	66	133

U-shaped Strong Magnets



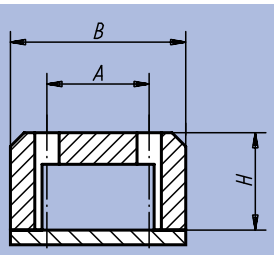

Surface finish:
U-shaped magnets with high adhesive force, surface red structure coated, application temperature up to 450 °C

Sample order:
nlm 09100-03

Note:
Strong magnets are supplied with a galvanised protective plate and are used for holding, sorting and lifting. Sizes 1, 2 and 3 have only one attachment hole in the centre.

Order No.	Size	A	B	B1	D	H	Adhesive force N	kg
09100-01	1	-	31	21	4	20	45	0,068
09100-02	2	-	40	26	5	26	90	0,135
09100-03	3	-	45	29	6,2	30	120	0,233
09100-04	4	30	58	44	8	35	230	0,500
09100-05	5	40	70	58	8	40	320	0,982

Magnets with flexible handle



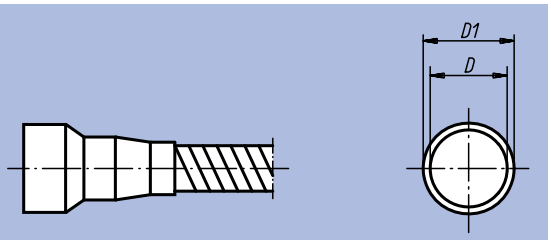

Surface finish:
Strong permanent magnet with flexible tube in brass and black plastic handle, surface chromium-plated

Sample order:
nlm 09150-04

Note:
Magnetic lifters are primarily used for removing or looking for steel parts in inaccessible places.

Order No.	Size	D	D1	total length mm	Adhesive force N	g
09150-01	1	6	8	450	5	70
09150-02	2	10	12	450	10	76
09150-03	3	13	15	520	18	212
09150-04	4	17	19	520	30	266

Permanent Magnetic Feet



Surface finish:
Permanent magnetic feet with high adhesive force; on / off switch, black surface

Sample order:
nlm 09210-03

Note:
Permanent magnetic feet are used for devices such as holding magnets, stands and stripping diamonds, etc.

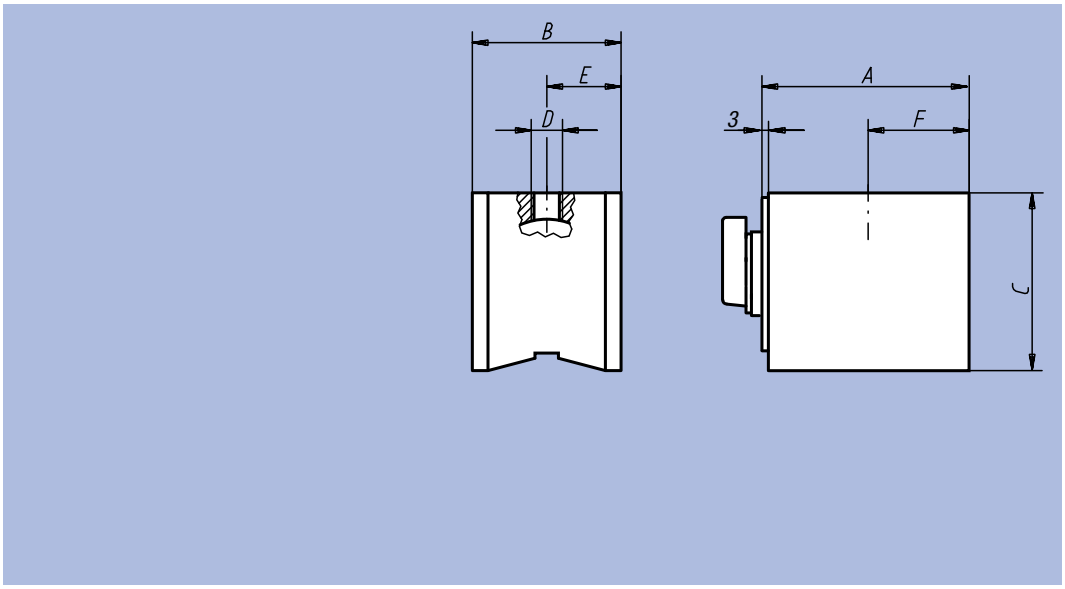

Order No.	A	B	C	D	E	F	Adhesive force N	kg
09210-01	61	50	55	M8x8	25	29	600	1,0
09210-02	76	50	55	M8x8	25	36,5	900	1,3
09210-03	76	50	55	M10x8	25	36,5	900	1,3

Notes:

Notes:

norelem

Systems and components for mechanical engineering and terotechnology

Linear Modules Lifting Units Rotary Modules Grip Modules Inductive Proximity Switches Plug Connectors	page	705 - 756
Slides Guide Rails Positioning Tables Linear Guide Systems Position Indicators	page	757 - 848
Couplings Safety Couplings Conical Clamping Rings Cardan Joints Quick Plug Couplings Bearings	page	849 - 884
ACME Threaded Spindles Ball-type Linear Drives Bearing Units	page	885 - 904
Rubber-metal buffer Shock Absorbers	page	905 - 920
Fork Joints Rod Ends Ball Joints Axial Joints Height Adjustment Elements Swivel Pads Swivel Feets Screw-in Plugs Equipment Feet Hinges	page	921 - 986
Oil Level Gauges Plugs Screw Plugs Vent Screws Dipsticks Filler Neck	page	987 - 1006
Tubular Connections Clamps Clamping Elements Tubes Construction of Columns	page	1007 - 1052

20000

Linear Modules
Lifting Units
Rotary Modules
Grip Modules
Inductive Proximity Switches
Plug Connectors



Notes:

Technical Information for Linear Modules, pneumatic, with Circular Channels

Housing:
Hard coated aluminium alloy with high corrosion resistance and surface hardness.

Flange plates:
Of aluminium alloy. Weight reduction, no oxidation.

Mounting surfaces:
Three screw-on faces with fastening and installation drill holes on the housing and flange plates present flexible application possibilities

Fastening thread:
All fastening threads in the housing are reinforced with threaded inserts

Guidance:
Recirculating ball bushes and precision steel shafts. Extremely precise and quiet run at high speed. Low friction values due to rolling friction, low motivity, minor wear. No stick-slip occurrences.

Piston drill holes:
Fine honed piston drill holes make for a long lifespan of the piston seals

Piston seals:
The double grooved rings undertake ancillary sealing and guidance functions and guarantee optimal sealing at full compressive force

Advantages:
– Highest accuracy of modular fit viafastening drill holes. All Modules combinable without insert plates (see Combination Table).
– Compact design, double action cylinder, integrated shock absorber and proximity switch.
– Assembly and maintenance friendly. Cover removable without tool.
– User-defined assembly position.
– LED indicators easily visible owing to fibre optics from the most diverse perspectives.
– Optionally available with integrated stroke drop-off covering for production security.

Drive proceeds via a double-acting cylinder without piston rods integrated in the slide. Four sizes with two or three guide shafts and strokes of 40 up to 300 mm are available. Owing to the large sized guide shafts with ball-bearing guides, load bearing capacities up to a maximum of 1080 N are possible and repeat accuracies of ±0.01 mm are achievable.

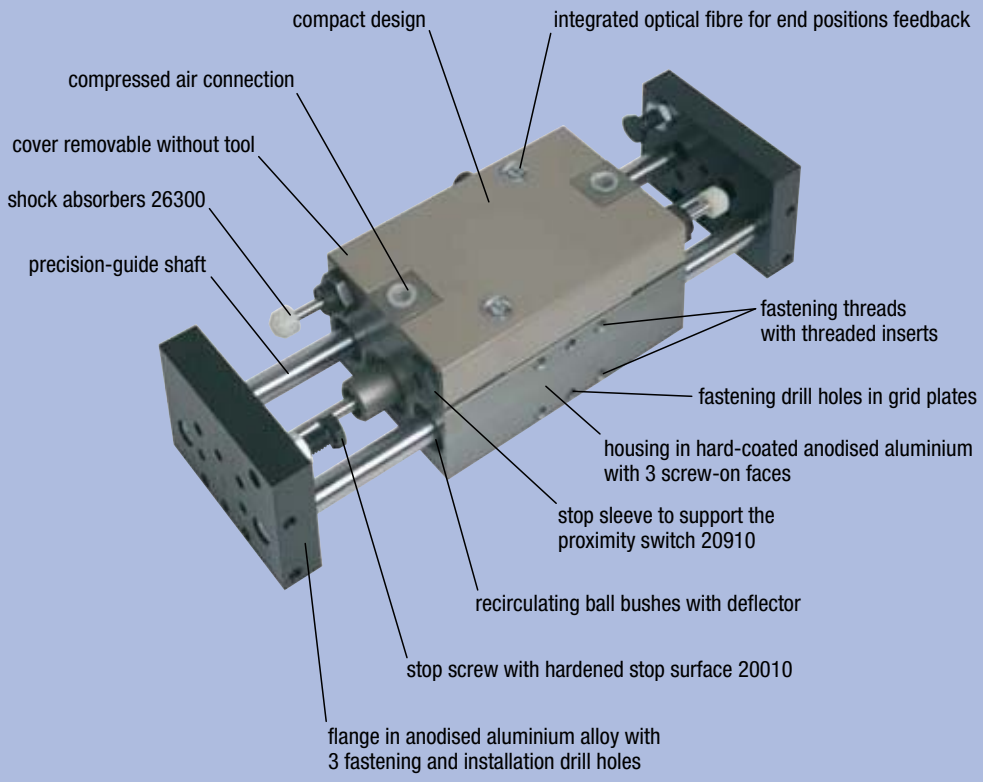

Combination possibilities without insert plate

		Horizontal assembly position			
		Size 1	Size 2	Size 3	Size 5
Vertical assembly position	Size 1	X	X	X	
	Size 2		X	X	X
	Size 3			X	X
	Size 5				X

Unlisted combinations are possible with insert plates.

With the linear modules, combinations in all stroke variants and sizes are, in principle, feasible. However, in horizontal application, it makes sense always to use a module of similarly large or larger size.

Linear Modules pneumatic

with two circular channels



Material:
Base body and flange plate
EN AW-5754; guide shafts in steel

Surface finish:
Body, hard-coated
Flange plates, anodized.
Guide shaft, hardened.

Sample order:
nlm 20000-21040

Note:
Maintenance-free pneumatic linear modules with three precision steel shafts and recirculating ball bushes with stripping. Drive via double action cylinder. Fastening threads are provided with threaded inserts. shock absorbers and proximity switches are installable in an integrated fashion (no protruding edges) and available as accessories. Hundred per cent reproducibility through positive locking design. Combinations in all sizes and stroke variants are feasible without adapter plates.
Repeat accuracies of ±0,01 mm are possible.
Weight specifications apply if the dovetail slides are centred.

Temperature range:
+5 °C up to +80 °C.

On request:
Available with locking cartridge as stroke deviation safeguard.

Accessory:
Shock absorber. Proximitiy switch. Plug connector.



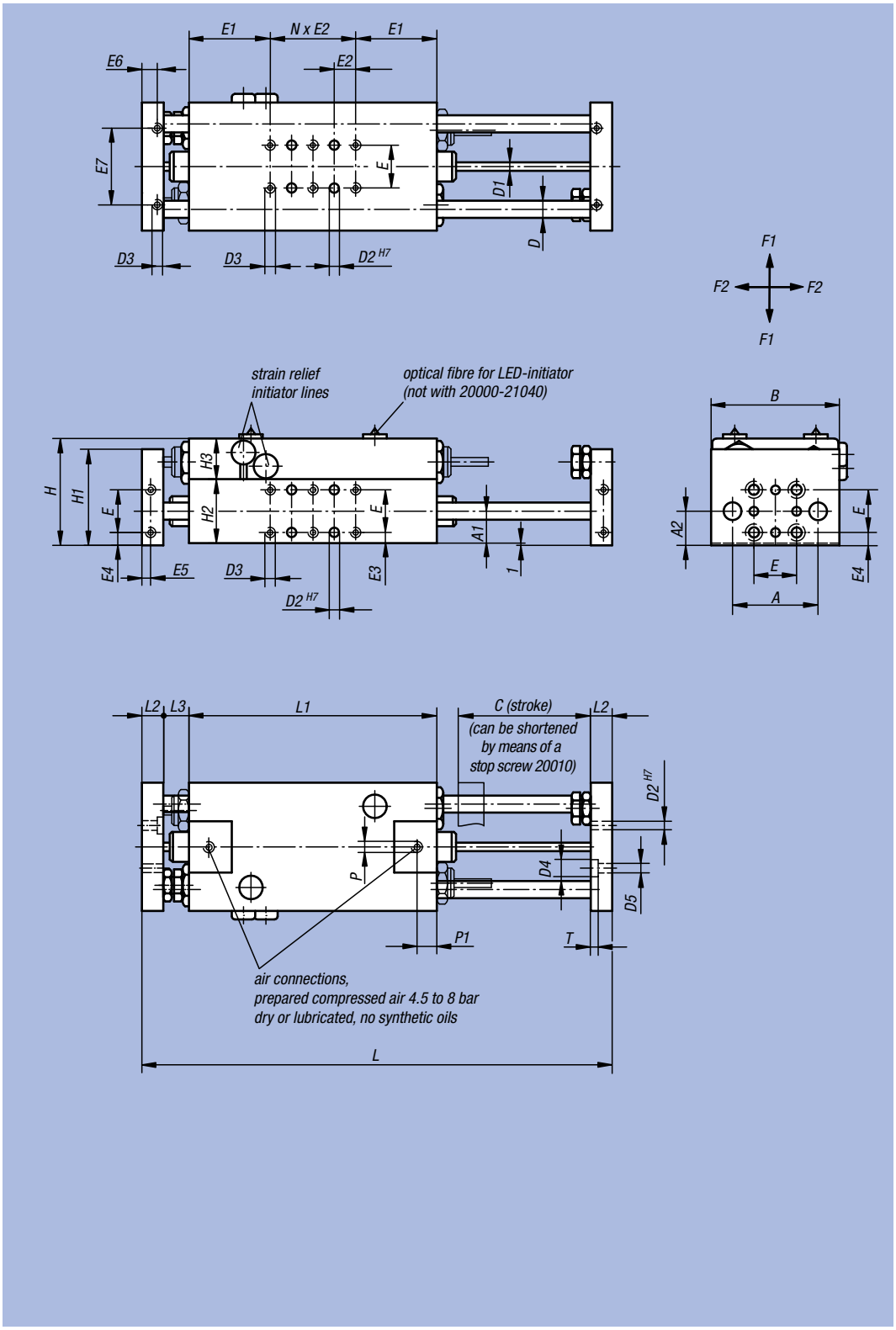

Linear Modules pneumatic

with two circular channels

Order No.	Size	A	A1	A2	B	C (stroke)	D	D1	D2	D3	D4	D5	E	E1	E2	E3	E4	E5	E6	E7
20000-21040	1	40	15	16	60	40	8	4	4	M4	8	4,5	20	38	10	5	6	4	9	36
20000-21060	1	40	15	16	60	60	8	4	4	M4	8	4,5	20	38	10	5	6	4	9	36
20000-21080	1	40	15	16	60	80	8	4	4	M4	8	4,5	20	38	10	5	6	4	9	36
20000-21100	1	40	15	16	60	100	8	4	4	M4	8	4,5	20	38	10	5	6	4	9	36
20000-22060	2	55	20	21	82	60	12	6	5	M5	10	5,5	30	45	15	5	6	5	11	50
20000-22090	2	55	20	21	82	90	12	6	5	M5	10	5,5	30	45	15	5	6	5	11	50
20000-22120	2	55	20	21	82	120	12	6	5	M5	10	5,5	30	45	15	5	6	5	11	50
20000-22150	2	55	20	21	82	150	12	6	5	M5	10	5,5	30	45	15	5	6	5	11	50
20000-23080	3	70	25	26	100	80	16	8	6	M6	11	6,6	40	50	20	5	6	6	14	70
20000-23120	3	70	25	26	100	120	16	8	6	M6	11	6,6	40	50	20	5	6	6	14	70
20000-23160	3	70	25	26	100	160	16	8	6	M6	11	6,6	40	50	20	5	6	6	14	70
20000-23200	3	70	25	26	100	200	16	8	6	M6	11	6,6	40	50	20	5	6	6	14	70
20000-25120	5	104	38	39	150	120	25	12	10	M10	18	11	60	72	30	8	9	8	17	96
20000-25180	5	104	38	39	150	180	25	12	10	M10	18	11	60	72	30	8	9	8	17	96
20000-25240	5	104	38	39	150	240	25	12	10	M10	18	11	60	72	30	8	9	8	17	96
20000-25300	5	104	38	39	150	300	25	12	10	M10	18	11	60	72	30	8	9	8	17	96

Order No.	Size	H	H1	H2	H3	L	L1	L2	L3	N (number)	P	P1	T	F1 max. kN	F2 max. kN	Piston force at 6 bar (N)	Cylinder-Ø	Air consumption per cycle at 6 bar (ccm)	kg
20000-21040	1	50	45	30	19	180	96	12	10	2	M5	9,3	3	0,140	0,380	100	16	11,3	1,100
20000-21060	1	50	45	30	19	220	116	12	10	4	M5	9,3	3	0,090	0,260	100	16	17	1,200
20000-21080	1	50	45	30	19	260	136	12	10	6	M5	9,3	3	0,050	0,180	100	16	22,6	1,300
20000-21100	1	50	45	30	19	300	156	12	10	8	M5	9,3	3	0,025	0,125	100	16	28,3	1,400
20000-22060	2	64	60	40	23	254	120	16	21	2	G 1/8	9,9	5,7	0,300	0,610	250	25	56	2,600
20000-22090	2	64	60	40	23	314	150	16	21	4	G 1/8	9,9	5,7	0,160	0,350	250	25	84	2,900
20000-22120	2	64	60	40	23	374	180	16	21	6	G 1/8	9,9	5,7	0,080	0,240	250	25	112	3,180
20000-22150	2	64	60	40	23	434	210	16	21	8	G 1/8	9,9	5,7	0,045	0,160	250	25	140	3,200
20000-23080	3	77	70	50	26	300	140	20	20	2	G 1/8	9,5	5	0,460	0,840	407	32	118	4,800
20000-23120	3	77	70	50	26	380	180	20	20	4	G 1/8	9,5	5	0,240	0,520	407	32	178	5,500
20000-23160	3	77	70	50	26	460	220	20	20	6	G 1/8	9,5	5	0,120	0,320	407	32	236	6,200
20000-23200	3	77	70	50	26	540	260	20	20	8	G 1/8	9,5	5	0,070	0,200	407	32	295	6,900
20000-25120	5	112	100	76	35	420	204	25	23	2	G 1/4	14	7	0,750	1,080	660	40	354,6	14,300
20000-25180	5	112	100	76	35	540	264	25	23	4	G 1/4	14	7	0,420	0,700	660	40	531,8	16,700
20000-25240	5	112	100	76	35	660	324	25	23	6	G 1/4	14	7	0,250	0,480	660	40	709,1	19,100
20000-25300	5	112	100	76	35	780	384	25	23	8	G 1/4	14	7	0,160	0,360	660	40	886,4	21,500

Order No.	Size	Suitable shock absorber	Suitable proximitiy switch	Suitable plug connector
20000-21040	1	26300-1415010	20910-010X5000	-
20000-21060	1	26300-1415010	20910-020	20950-030X2000
20000-21080	1	26300-1415010	20910-020	20950-030X2000
20000-21100	1	26300-1415010	20910-020	20950-030X2000
20000-22060	2	26300-1415010	20910-020	20950-030X2000
20000-22090	2	26300-1415010	20910-030	20950-030X2000
20000-22120	2	26300-1415010	20910-030	20950-030X2000
20000-22150	2	26300-1415010	20910-030	20950-030X2000
20000-23080	3	26300-2015016	20910-030	20950-030X2000
20000-23120	3	26300-2015016	20910-030	20950-030X2000
20000-23160	3	26300-2015016	20910-030	20950-030X2000
20000-23200	3	26300-2015016	20910-030	20950-030X2000
20000-25120	5	26300-2515030	20910-030	20950-030X2000
20000-25180	5	26300-2515030	20910-030	20950-030X2000
20000-25240	5	26300-2515030	20910-030	20950-030X2000
20000-25300	5	26300-2515030	20910-030	20950-030X2000

Linear Modules pneumatic

with three circular channels



Material:
Base body and flange plate
EN AW-5754; guide shafts in steel

Surface finish:
Body, hard-coated
Flange plates, anodized.
Guide shaft, hardened.

Sample order:
nlm 20000-31040

Note:
Maintenance-free pneumatic linear modules with three precision steel shafts and recirculating ball bushes with stripping. Drive via double action cylinder. Fastening threads are provided with threaded inserts. shock absorbers and proximity switches are installable in an integrated fashion (no protruding edges) and available as accessories. Hundred per cent reproducibility through positive locking design. Combinations in all sizes and stroke variants are feasible without adapter plates.
Repeat accuracies of ±0,01 mm are possible.
Weight specifications apply if the dovetail slides are centred.

Temperature range:
+5 °C up to +80 °C.

On request:
Available with locking cartridge as stroke deviation safeguard.

Accessory:
Shock absorber. Proximitiy switch. Plug connector.



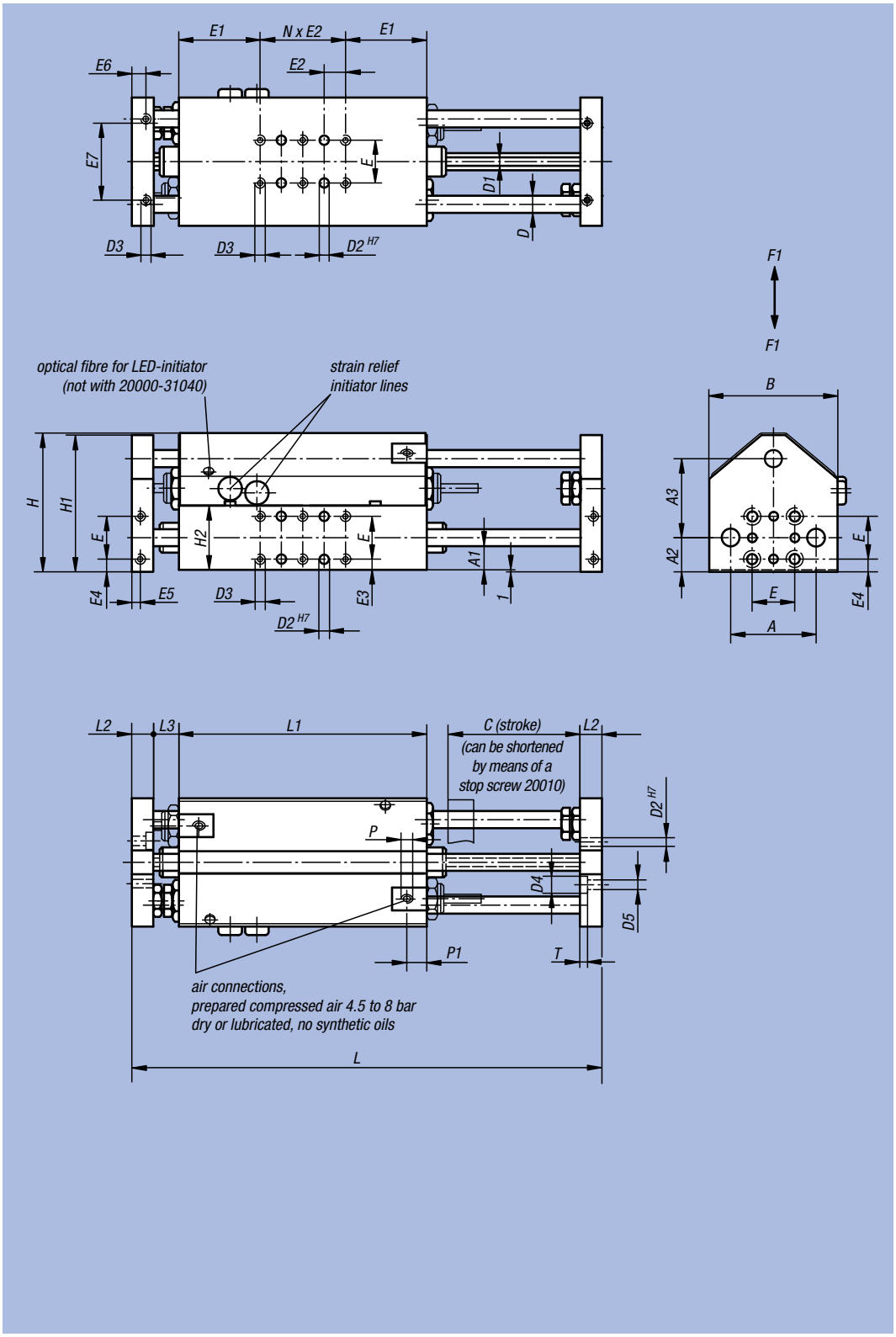

Linear Modules pneumatic

with three circular channels

Order No.	Size	A	A1	A2	A3	B	C (stroke)	D	D1	D2	D3	D4	D5	E	E1	E2	E3	E4	E5	E6	E7
20000-31040	1	40	15	16	37	60	40	8	4	4	M4	8	4,5	20	38	10	5	6	4	9	36
20000-31060	1	40	15	16	37	60	60	8	4	4	M4	8	4,5	20	38	10	5	6	4	9	36
20000-31080	1	40	15	16	37	60	80	8	4	4	M4	8	4,5	20	38	10	5	6	4	9	36
20000-31100	1	40	15	16	37	60	100	8	4	4	M4	8	4,5	20	38	10	5	6	4	9	36
20000-32060	2	55	20	21	50	82	60	12	6	5	M5	10	5,5	30	45	15	5	6	5	11	50
20000-32090	2	55	20	21	50	82	90	12	6	5	M5	10	5,5	30	45	15	5	6	5	11	50
20000-32120	2	55	20	21	50	82	120	12	6	5	M5	10	5,5	30	45	15	5	6	5	11	50
20000-32150	2	55	20	21	50	82	150	12	6	5	M5	10	5,5	30	45	15	5	6	5	11	50
20000-33100	3	70	25	26	62	100	80	16	8	6	M6	11	6,6	40	50	20	5	6	6	14	70
20000-33120	3	70	25	26	62	100	120	16	8	6	M6	11	6,6	40	50	20	5	6	6	14	70
20000-33160	3	70	25	26	62	100	160	16	8	6	M6	11	6,6	40	50	20	5	6	6	14	70
20000-33200	3	70	25	26	62	100	200	16	8	6	M6	11	6,6	40	50	20	5	6	6	14	70
20000-35120	5	104	38	39	93	150	120	25	12	10	M10	18	11	60	72	30	8	9	8	17	96
20000-35180	5	104	38	39	93	150	180	25	12	10	M10	18	11	60	72	30	8	9	8	17	96
20000-35240	5	104	38	39	93	150	240	25	12	10	M10	18	11	60	72	30	8	9	8	17	96
20000-35300	5	104	38	39	93	150	300	25	12	10	M10	18	11	60	72	30	8	9	8	17	96

Order No.	Size	H	H1	H2	L	L1	L2	L3	N (number)	P	P1	T	F1 max. kN	Piston force at 6 bar (N)	Cylinder-Ø	Air consumption per cycle at 6 bar (ccm)	kg
20000-31040	1	65	64	30	180	96	12	10	2	M5	9,3	3	0,380	100	16	11,3	1,300
20000-31060	1	65	64	30	220	116	12	10	4	M5	9,3	3	0,260	100	16	17	1,600
20000-31080	1	65	64	30	260	136	12	10	6	M5	9,3	3	0,180	100	16	22,6	1,900
20000-31100	1	65	64	30	300	156	12	10	8	M5	9,3	3	0,125	100	16	28,3	2,200
20000-32060	2	86	85	40	254	120	16	21	2	G 1/8	9,9	5,7	0,610	250	25	56	3,100
20000-32090	2	86	85	40	314	150	16	21	4	G 1/8	9,9	5,7	0,350	250	25	84	3,500
20000-32120	2	86	85	40	374	180	16	21	6	G 1/8	9,9	5,7	0,240	250	25	112	4,100
20000-32150	2	86	85	40	434	210	16	21	8	G 1/8	9,9	5,7	0,160	250	25	140	4,300
20000-33100	3	107	106	50	300	140	20	20	2	G 1/8	9,5	5	0,840	407	32	118	5,500
20000-33120	3	107	106	50	380	180	20	20	4	G 1/8	9,5	5	0,520	407	32	178	6,400
20000-33160	3	107	106	50	460	220	20	20	6	G 1/8	9,5	5	0,320	407	32	236	7,200
20000-33200	3	107	106	50	540	260	20	20	8	G 1/8	9,5	5	0,200	407	32	295	8,100
20000-35120	5	159	158	76	420	204	25	23	2	G 1/4	14	7	1,080	660	40	354,6	16,300
20000-35180	5	159	158	76	540	264	25	23	4	G 1/4	14	7	0,700	660	40	531,8	19,200
20000-35240	5	159	158	76	660	324	25	23	6	G 1/4	14	7	0,480	660	40	709,1	22,100
20000-35300	5	159	158	76	780	384	25	23	8	G 1/4	14	7	0,360	660	40	886,4	24,900

Order No.	Size	Suitable shock absorber	Suitable proximitiy switch	Suitable plug connector
20000-31040	1	26300-1415010	20910-010X5000	-
20000-31060	1	26300-1415010	20910-020	20950-030X2000
20000-31080	1	26300-1415010	20910-020	20950-030X2000
20000-31100	1	26300-1415010	20910-020	20950-030X2000
20000-32060	2	26300-1415010	20910-020	20950-030X2000
20000-32090	2	26300-1415010	20910-030	20950-030X2000
20000-32120	2	26300-1415010	20910-030	20950-030X2000
20000-32150	2	26300-1415010	20910-030	20950-030X2000
20000-33100	3	26300-2015016	20910-030	20950-030X2000
20000-33120	3	26300-2015016	20910-030	20950-030X2000
20000-33160	3	26300-2015016	20910-030	20950-030X2000
20000-33200	3	26300-2015016	20910-030	20950-030X2000
20000-35120	5	26300-2515030	20910-030	20950-030X2000
20000-35180	5	26300-2515030	20910-030	20950-030X2000
20000-35240	5	26300-2515030	20910-030	20950-030X2000
20000-35300	5	26300-2515030	20910-030	20950-030X2000

Set Screws



Material:
Steel

Surface finish:
Black oxide finish;
stop surface hardened

Sample order:
nlm 20010-08017

Note:
Set screws serve to reduce the nominal stroke of the linear modules, pneumatic, with two or three circular channels.

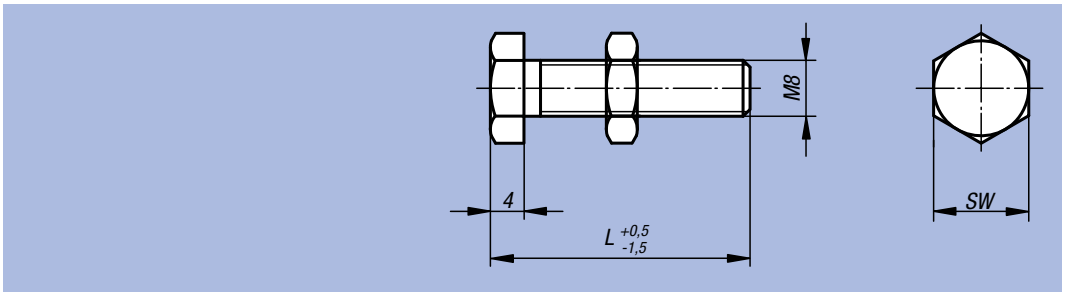

Order No.	L	SW	kg
20010-08017	17	13	0,012
20010-08022	22	13	0,014
20010-08027	27	13	0,015
20010-08032	32	13	0,017
20010-08035	35	13	0,019
20010-08045	45	13	0,023
20010-08055	55	13	0,027
20010-08065	65	13	0,030
20010-08073	73	13	0,034
20010-08088	88	13	0,040

Notes:

Technical Information for Linear Modules, pneumatic, with guide rail

The linear modules can be set in any assembly position. The standardised fastening drill holes make versatile combinations with out other units possible. Due to the precise centring system, all modules can be combined with one another quickly and smoothly. Within the individual sizes without adapter plates.

– piston force at 6 bar: 11 N – 76 N.
– cylinder diameter: 6 mm – 16 mm.
– stroke lengths: 20 mm – 200 mm.
– repeat accuracy: ±0.01 mm.
– diverse fastening possibilities.
– linear guidance system with recirculating linear ball bearings for heavy loads and positioning accuracy with quiet running performance.
– double junction rolling guide for high torque loads and precision.

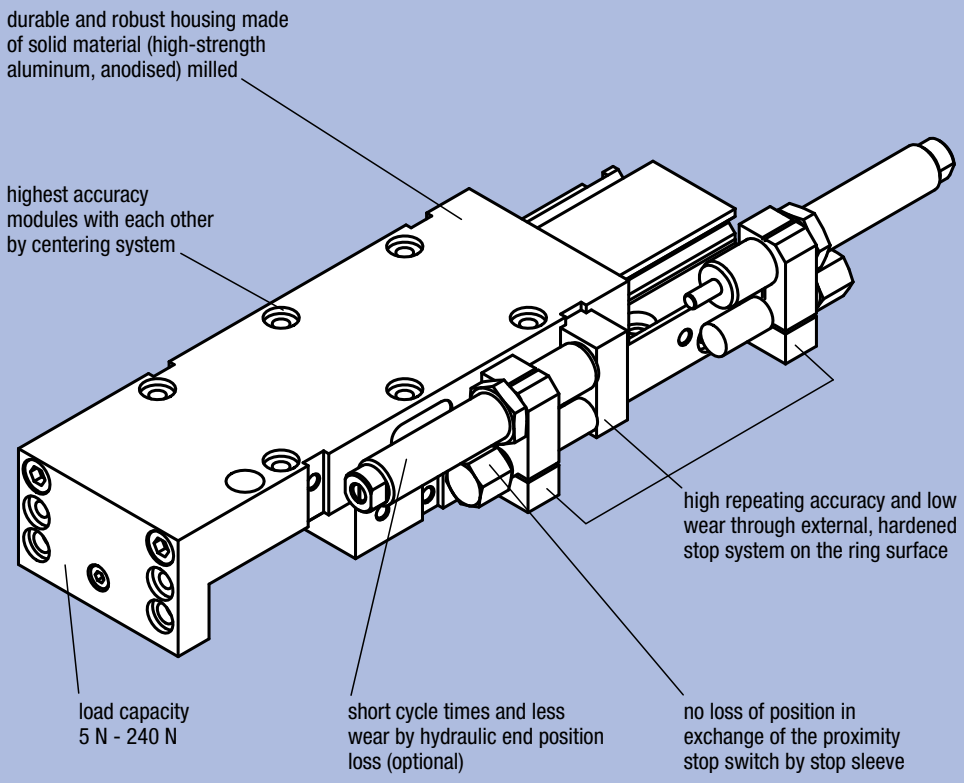

Travel times			
norelem	**stroke lengths (mm)**	**load in kg**	**time/complete cycle**
20030	20 / 35 / 50	0,250	0,2 s / 0,3 s / 0,4 s
20032	35 / 65	0,500	0,3 s / 0,45 s
20034	30 / 60 / 90	1,000	0,3 s / 0,4 s / 0,5 s
20036	50 / 100 / 150 / 200	5,000	0,5 s / 0,65 s / 0,8 s / 0,95 s

The specified guide values for cycle times were ascertained under operation-specific conditions and represent actual values.

Selection overview				
guidance	Linear Guidance System with Recirculating Linear Ball-bearings		Double junction rolling guide	
design	for the smallest installation spaces	for small installation spaces	-	-
stroke lengths (mm)	20 / 35 / 50	35 / 65	20 / 30 / 45 / 60 / 75 / 90	30 / 50 / 75 / 100 / 125 / 150 /200
piston force at 6 bar (N)	11	18	33	76
cylinder diameter (mm)	6	8	12	16
load bearing capacity max. (N)	5	12	30	100 - 240
norelem	**20030**	**20032**	**20034**	**20036**

Linear Modules pneumatic

with aligning guide

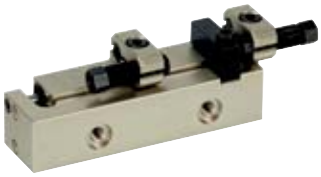

Material:
Housing in high-strength aluminium;
stop system steel

Surface finish:
Housing anodized;
stop system hardened

Sample order:
nlm 20030-2020

Note:
Maintenance-free pneumatic linear modules for the smallest installation spaces with recirculating ball bearing guide and load capacity of max. 5 N. Control by 4/2 or 5/2 directional valve. Drive ensues via compressed air, 4-8 bar, constant, filtered (10 µm), dried, oiled or unoiled. Compressed air connection M3.
Modules of the same size can be combined with one another without adapter plates via the precise centring system by means of centring rings 20240.
The position of the stop system is variable.

Repeat accuracy ±0.01 mm.

Accessory:
Shock absorber. Proximitiy switch.



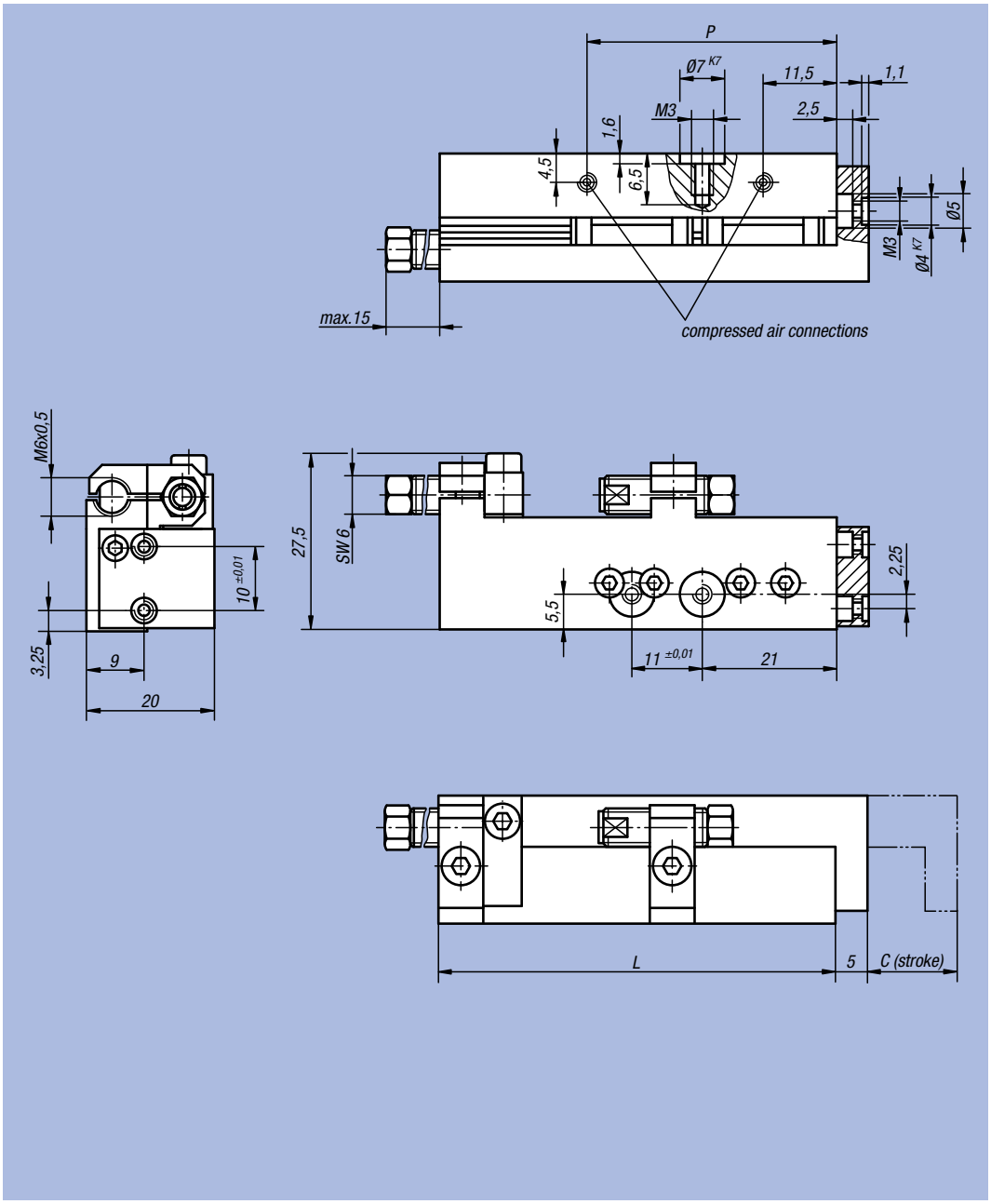

Order No.	Size	C (stroke)	L	P	Piston force at 6 bar (N)	Retraction force at 6 bars (N)	Cylinder-Ø	Air consumption per cycle at 6 bar (ccm)	kg
20030-2020	2	20	62	39	11	7	6	8,8	0,060
20030-2035	2	35	77	63	11	7	6	15,4	0,080
20030-2050	2	50	92	69	11	7	6	22	0,100

Order No.	Size	Suitable shock absorber	Suitable proximitiy switch
20030-2020	2	26310-0605005	20900-010X2000
20030-2035	2	26310-0605005	20900-010X2000
20030-2050	2	26310-0605005	20900-010X2000

Linear Modules pneumatic

with aligning guide

Load data

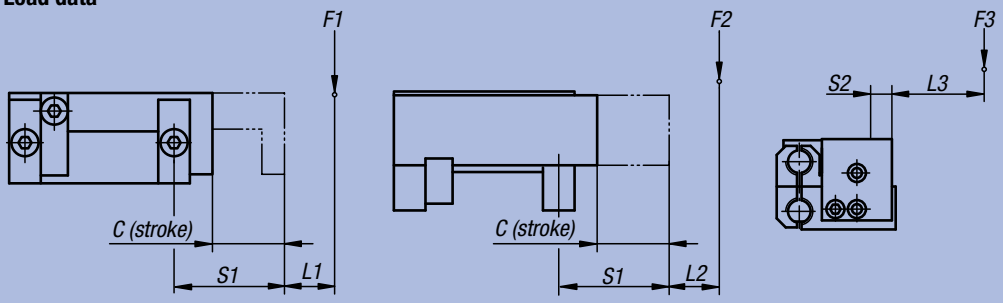

M1 = (S1 + L1) x F1

M2 = (S1 + L2) x F2

M3 = (S2 + L3) x F3

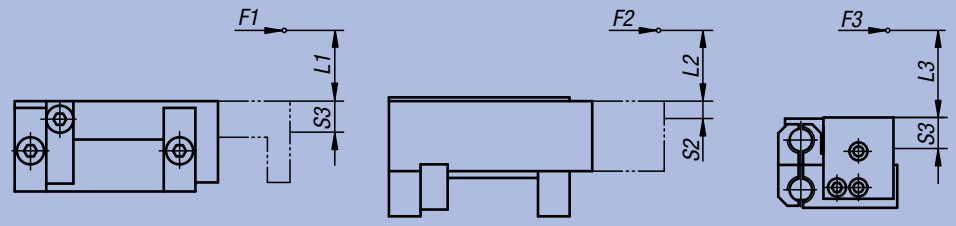

M1 = (S3 + L1) x F1

M2 = (S2 + L2) x F2

M3 = (S3 + L3) x F3

$$\frac{M1_{eff}}{M1_{zul}} + \frac{M2_{eff}}{M2_{zul}} + \frac{M3_{eff}}{M3_{zul}} \leq 1$$

Calculation of the lifespan:

$$L = \left(\frac{M_{zul}}{M_{eff}}\right)^3 \times 10^5$$

L = lifespan (m)
M_{zul} = permissible torque (Nm)
M_{eff} = calculated torque (Nm)

$$L = \left(\frac{C}{F}\right)^3 \times 10^5$$

L = lifespan (m)
C = dynamic base load (N)
F = dynamic load (N)

Order No.	Size	M1 Nm	M2 Nm	M3 Nm	S1	S2	S3	Dynamic base loads N	Static base loads N
20030-2020	2	4	4	2	9 + C (stroke)	3,5	7	541	951
20030-2035	2	4	4	2	9 + C (stroke)	3,5	7	541	951
20030-2050	2	4	4	2	9 + C (stroke)	3,5	7	541	951

Linear Modules pneumatic

with aligning guide



Material:
Housing in high-strength aluminium;
stop system steel

Surface finish:
Housing anodized;
stop system hardened

Sample order:
nlm 20032-4035

Note:
Maintenance-free pneumatic linear modules for small installation spaces with recirculating ball bearing guide and load capacity of max. 12 N. Control by 4/2 or 5/2 directional valve. Drive ensues via compressed air, 4-8 bar, constant, filtered (10 µm), dried, oiled or unoiled. Compressed air connection M5.
Modules of the same size can be combined with one another without adapter plates via the precise centring system by means of centring rings 20240.
The position of the stop system is variable.

Repeat accuracy ±0.01 mm.

Accessory:
Shock absorber. Proximitiy switch.

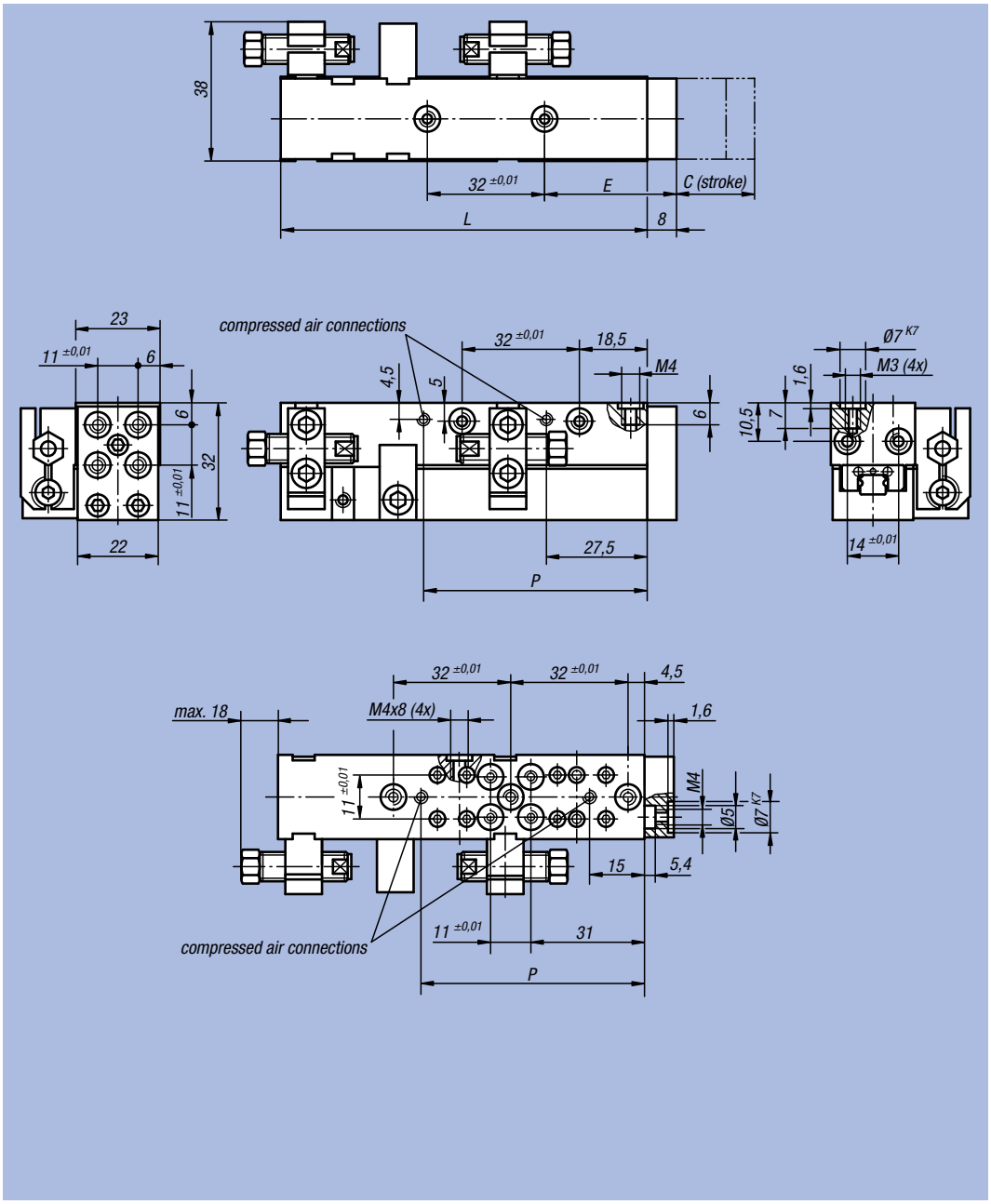



Order No.	Size	C (stroke)	E	L	P	Piston force at 6 bar (N)	Retraction force at 6 bars (N)	Cylinder-Ø	Air consumption per cycle at 6 bar (ccm)	kg
20032-4035	4	35	36	100	61	18	13	8	30,8	0,200
20032-4065	4	65	51	130	91	18	13	8	57,2	0,300

Order No.	Size	Suitable shock absorber	Suitable proximitiy switch
20032-4035	4	26300-0810008	20900-020X5000
20032-4065	4	26300-0810008	20900-020X5000

Linear Modules pneumatic

with aligning guide

Load data

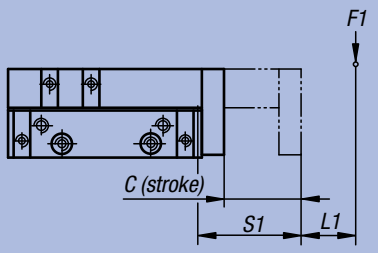

M1 = (S1 + L1) x F1

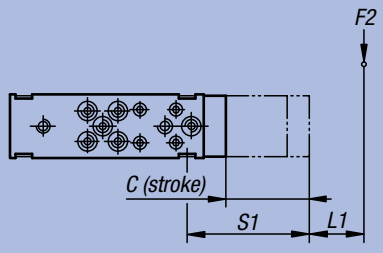

M2 = (S1 + L2) x F2

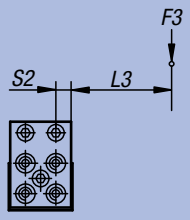

M3 = (S2 + L3) x F3

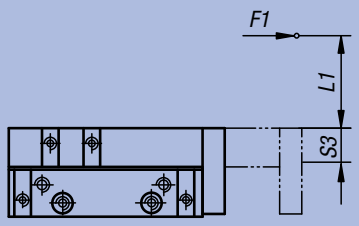

M1 = (S3 + L1) x F1

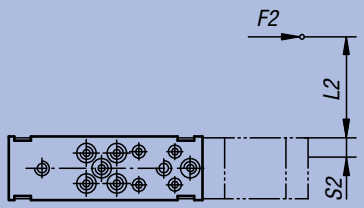

M2 = (S2 + L2) x F2

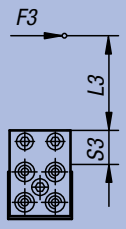

M3 = (S3 + L3) x F3

$$\frac{M1_{eff}}{M1_{zul}} + \frac{M2_{eff}}{M2_{zul}} + \frac{M3_{eff}}{M3_{zul}} \leq 1$$

Calculation of the lifespan:

$$L = \left(\frac{M_{zul}}{M_{eff}}\right)^3 \times 10^5$$

L = lifespan (m)
M_{zul} = permissible torque (Nm)
M_{eff} = calculated torque (Nm)

$$L = \left(\frac{C}{F}\right)^3 \times 10^5$$

L = lifespan (m)
C = dynamic base load (N)
F = dynamic load (N)

Order No.	Size	M1 Nm	M2 Nm	M3 Nm	S1	S2	S3	Dynamic base loads N	Static base loads N
20032-4035	4	8	8	4	13 + C (stroke)	7,5	10	1200	1960
20032-4065	4	8	8	4	13 + C (stroke)	7,5	10	1200	1960

Linear Modules pneumatic

with aligning guide



Material:
Housing in high-strength aluminium;
stop system steel

Surface finish:
Housing anodized;
stop system hardened

Sample order:
nlm 20034-4020

Note:
Maintenance-free pneumatic linear modules with recirculating ball bearing guide and load capacity of max. 30 N. Control by 4/2 or 5/2 directional valve. Drive ensues via compressed air, 4-8 bar, constant, filtered (10 µm), dried, oiled or unoiled. Compressed air connection M5.
Modules of the same size can be combined with one another without adapter plates via the precise centring system by means of centring rings 20240.
The position of the stop system is variable.

Repeat accuracy ±0.01 mm.

Accessory:
Shock absorber. Proximitiy switch.



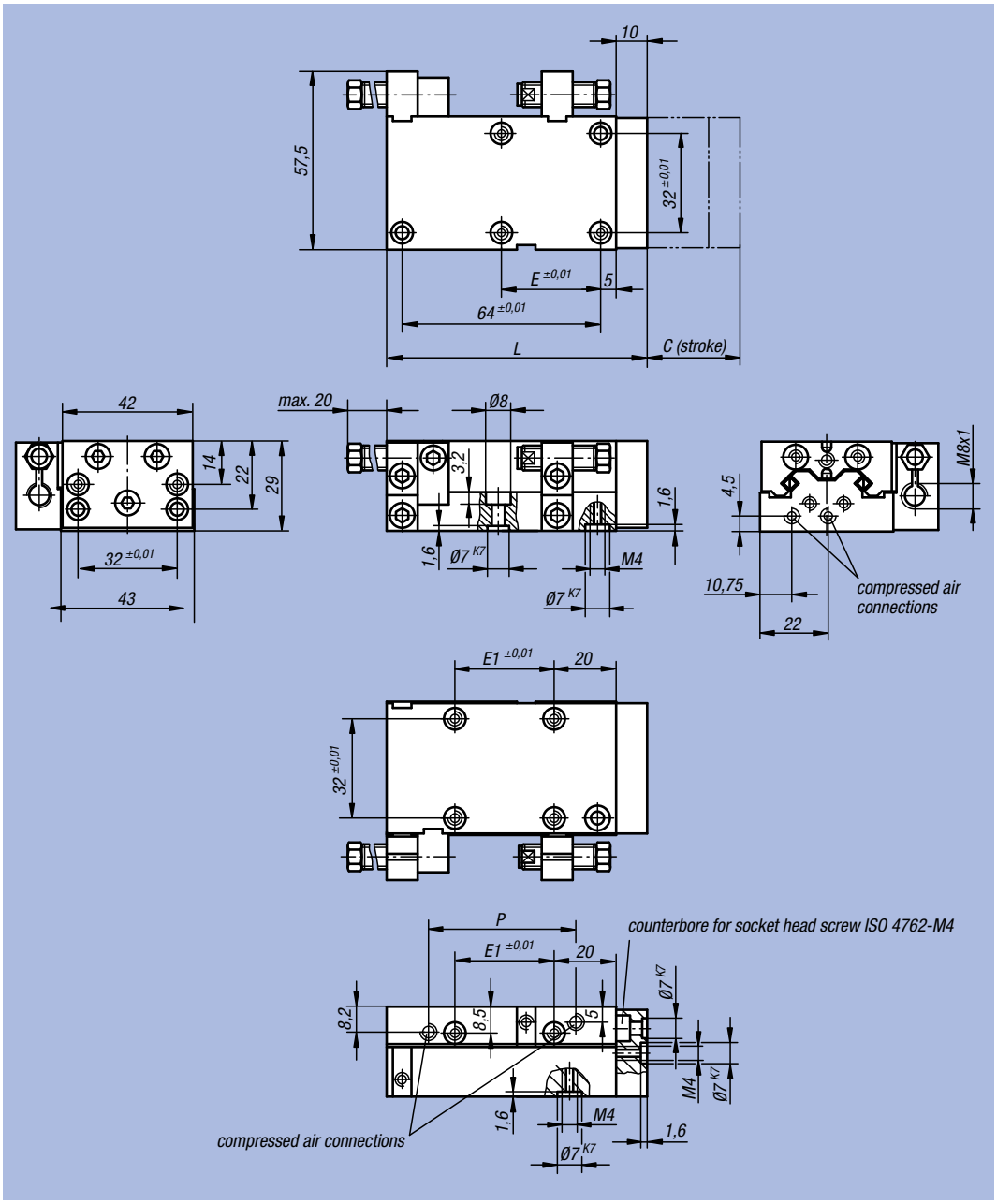

Order No.	Size	C (stroke)	E	E1	L	P	Piston force at 6 bar (N)	Retraction force at 6 bars (N)	Cylinder-Ø	Air consumption per cycle at 6 bar (ccm)	kg
20034-4020	4	20	1 x 32	1 x 32	84	47,5	33	45	12	4	0,500
20034-4030	4	30	1 x 32	1 x 32	84	47,5	33	45	12	6	0,500
20034-4045	4	45	2 x 32	2 x 32	104	55	33	45	12	10,5	0,740
20034-4060	4	60	3 x 32	2 x 32	124	78,5	33	45	12	15	0,740
20034-4075	4	75	3 x 32	2 x 32	144	85	33	45	12	21,5	0,980
20034-4090	4	90	4 x 32	3 x 32	164	110,5	33	45	12	28	0,980

Order No.	Size	Suitable shock absorber	Suitable proximitiy switch
20034-4020	4	26300-0810008	20900-020X5000
20034-4030	4	26300-0810008	20900-020X5000
20034-4045	4	26300-0810008	20900-020X5000
20034-4060	4	26300-0810008	20900-020X5000
20034-4075	4	26300-0810008	20900-020X5000
20034-4090	4	26300-0810008	20900-020X5000

Linear Modules pneumatic

with aligning guide

Load data

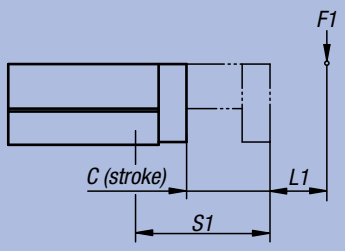

M1 = (S1 + L1) x F1

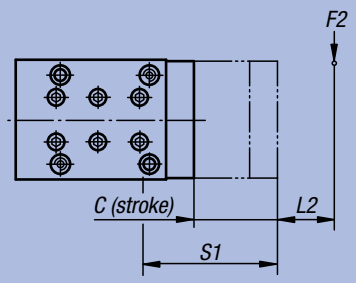

M2 = (S1 + L2) x F2

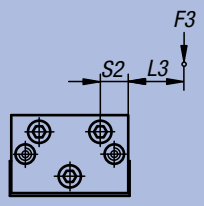

M3 = (S2 + L3) x F3

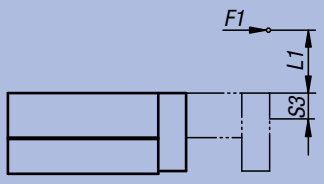

M1 = (S3 + L1) x F1

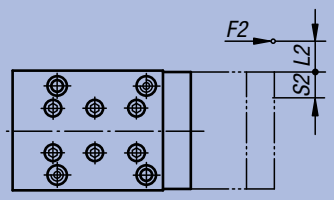

M2 = (S2 + L2) x F2

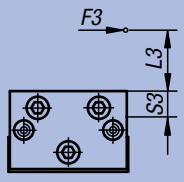

M3 = (S3 + L3) x F3

$$\frac{M1_{eff}}{M1_{zul}} + \frac{M2_{eff}}{M2_{zul}} + \frac{M3_{eff}}{M3_{zul}} \leq 1$$

Calculation of the lifespan:

$$L = \left(\frac{M_{zul}}{M_{eff}}\right)^3 \times 10^5$$

L = lifespan (m)
M_{zul} = permissible torque (Nm)
M_{eff} = calculated torque (Nm)

Order No.	Size	M1 Nm	M2 Nm	M3 Nm	S1	S2	S3
20034-4020	4	12	12	17	29 + C/2 (stroke)	9	13
20034-4030	4	12	12	17	29 + C/2 (stroke)	9	13
20034-4045	4	15	15	20	36 + C/2 (stroke)	9	13
20034-4060	4	18	18	23	44 + C/2 (stroke)	9	13
20034-4075	4	21	21	26	51 + C/2 (stroke)	9	13
20034-4090	4	25	25	29	59 + C/2 (stroke)	9	13

Linear Modules pneumatic

with aligning guide



Material:
Housing in high-strength aluminium;
stop system steel

Surface finish:
Housing anodized;
stop system hardened

Sample order:
nlm 20036-6030

Note:
Maintenance-free pneumatic linear modules with recirculating ball bearing guide and load capacity of max. 240 N. Control by 4/2 or 5/2 directional valve. Drive ensues via compressed air, 4-8 bar, constant, filtered (10 µm), dried, oiled or unoiled. Compressed air connection M5.
Modules of the same size can be combined with one another without adapter plates via the precise centring system by means of centring rings 20240.
The position of the stop system is variable.

Repeat accuracy ±0.01 mm.

Accessory:
Shock absorber. Proximitiy switch. Plug connector.



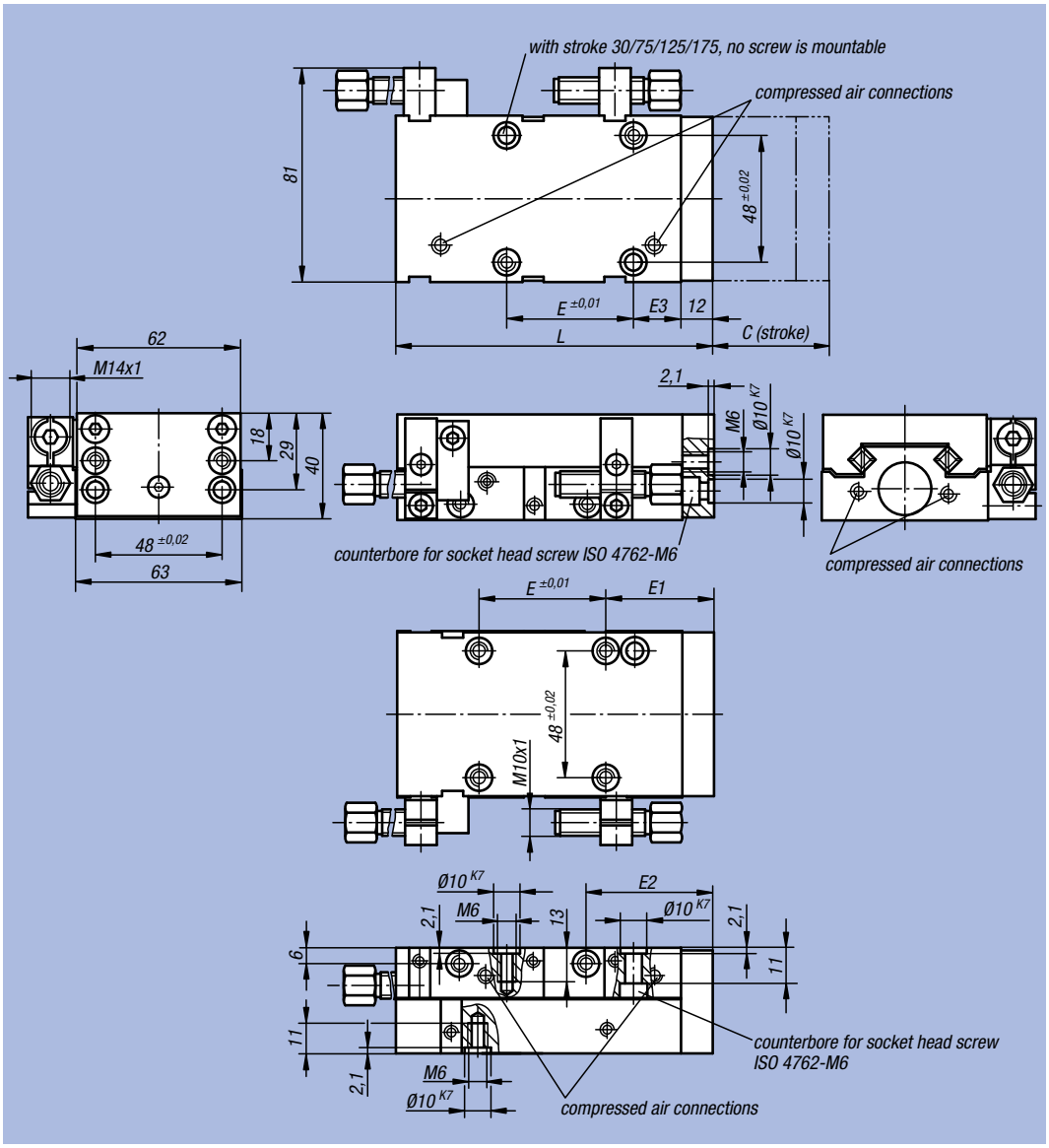

Order No.	Size	C (stroke)	E	E1	E2	E3	L	Load bearing capacity N	Piston force at 6 bar (N)	Retraction force at 6 bars (N)	Cylinder-Ø	Air consumption per cycle at 6 bar (ccm)	kg
20036-6030	6	30	1 x 48	29	36	18	121	240	76	66	16	11,2	1,070
20036-6050	6	50	1 x 48	29	36	18	121	220	76	66	16	18,7	1,070
20036-6075	6	75	2 x 48	35	42	21	175	200	76	66	16	28	1,470
20036-6100	6	100	2 x 48	35	42	21	175	180	76	66	16	37,4	1,470
20036-6125	6	125	3 x 48	17	45	27	231	160	76	66	16	46,8	1,830
20036-6150	6	150	3 x 48	17	45	27	231	140	76	66	16	56,1	1,830
20036-6175	6	175	4 x 48	26	52	34	288	120	76	66	16	65,5	2,200
20036-6200	6	200	4 x 48	26	52	34	288	100	76	66	16	74,8	2,200

Order No.	Size	Suitable shock absorber	Suitable proximitiy switch	Suitable plug connector
20036-6030	6	26310-1410012	20915-020	20950-010X2000
20036-6050	6	26310-1410012	20915-020	20950-010X2000
20036-6075	6	26310-1410012	20915-020	20950-010X2000
20036-6100	6	26310-1410012	20915-020	20950-010X2000
20036-6125	6	26310-1410012	20915-020	20950-010X2000
20036-6150	6	26310-1410012	20915-020	20950-010X2000
20036-6175	6	26310-1410012	20915-020	20950-010X2000
20036-6200	6	26310-1410012	20915-020	20950-010X2000

Linear Modules pneumatic

with aligning guide

Load data

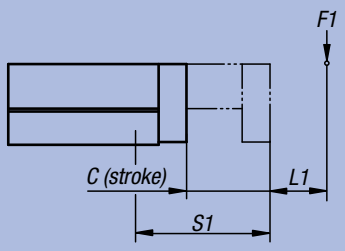

M1 = (S1 + L1) x F1

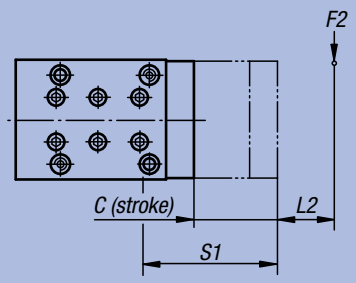

M2 = (S1 + L2) x F2

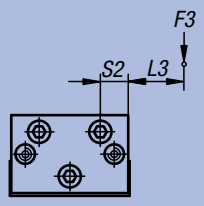

M3 = (S2 + L3) x F3

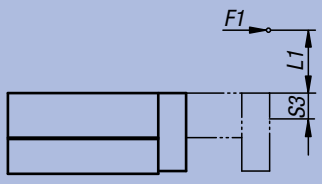

M1 = (S3 + L1) x F1

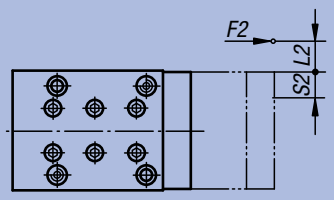

M2 = (S2 + L2) x F2

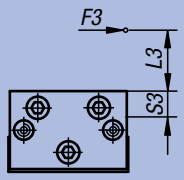

M3 = (S3 + L3) x F3

$$\frac{M1_{eff}}{M1_{zul}} + \frac{M2_{eff}}{M2_{zul}} + \frac{M3_{eff}}{M3_{zul}} \leq 1$$

Calculation of the lifespan:

$$L = \left(\frac{M_{zul}}{M_{eff}}\right)^3 \times 10^5$$

L = lifespan (m)
M_{zul} = permissible torque (Nm)
M_{eff} = calculated torque (Nm)

Order No.	Size	M1 Nm	M2 Nm	M3 Nm	S1	S2	S3
20036-6030	6	33,2	33,2	44,6	45 + C/2 (stroke)	14	16
20036-6050	6	33,2	33,2	44,6	45 + C/2 (stroke)	14	16
20036-6075	6	38,7	38,7	59,5	70 + C/2 (stroke)	14	16
20036-6100	6	38,7	38,7	59,5	70 + C/2 (stroke)	14	16
20036-6125	6	44,2	44,2	59,5	95 + C/2 (stroke)	14	16
20036-6150	6	44,2	44,2	59,5	95 + C/2 (stroke)	14	16
20036-6175	6	49,7	49,7	74,4	120 + C/2 (stroke)	14	16
20036-6200	6	49,7	49,7	74,4	120 + C/2 (stroke)	14	16

Layout of the Lift-Swivel Unit made up of four modules of the same installation size

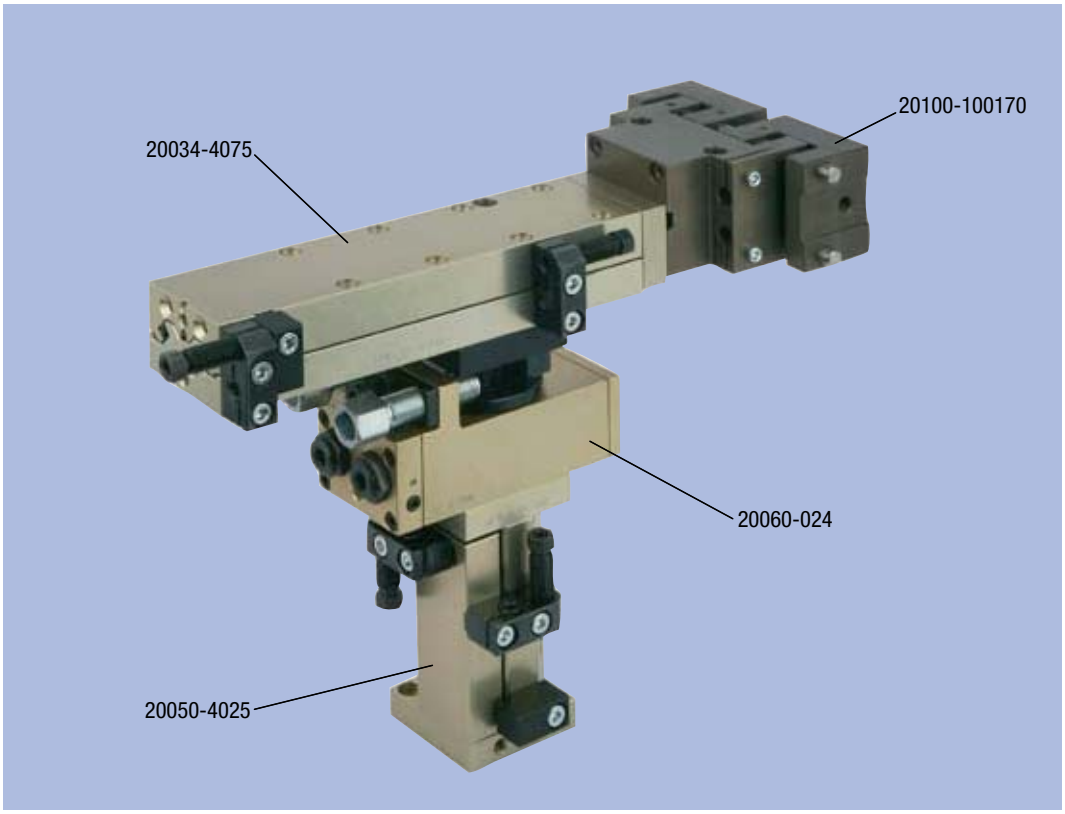

Notes:

Technical Information for Lifting Units, pneumatic

Lifting units with high load rating for universal application in the short stroke module. The standardised fastening drill holes make versatile combinations with out other units possible. Due to the precise centring system, all modules can be combined with one another quickly and smoothly. Within the individual sizes without adapter plates.

– piston force at 6 bar: 80 N – 360 N.
– cylinder diameter: 16 mm – 32 mm.
– stroke lengths: 10 mm – 100 mm.
– repeat accuracy: up to ±0.01 mm.
– diverse fastening possibilities.
– double junction rolling guide for high torque loads and precision.
– ball-bearing guide sealed for hard application conditions with high precision.

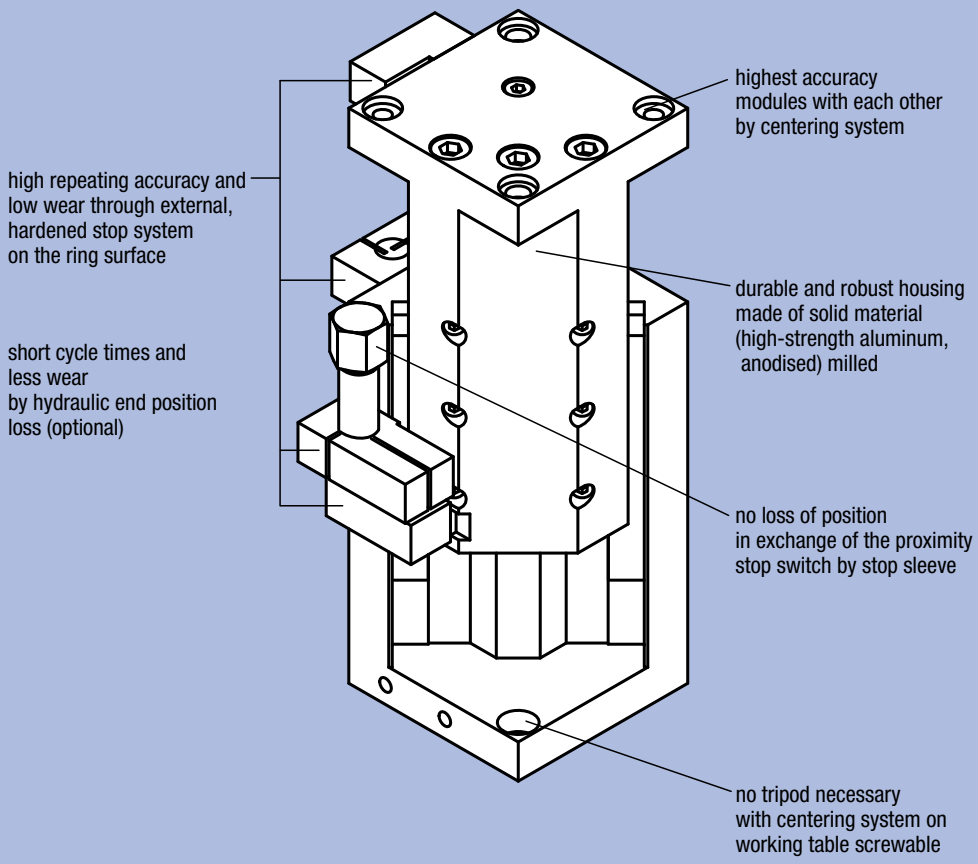

Travel times				
norelem	**size**	**stroke lengths (mm)**	**load in kg**	**time/complete cycle (with shock absorbers)**
20050	4	10 / 25	0,200	0,3 s / 0,4 s
20050	6	25 / 50	0,200	0,3 s / 0,4 s
20054	6	50 / 75 / 100	5,000	0,5 s / 0,7 s / 0,8 s
20056	9	50 / 75 / 100	10,000	0,5 s / 0,7 s / 0,9 s

The specified guide values for cycle times were ascertained under operation-specific conditions and represent actual values.

Selection overview				
guidance	double junction rolling guide		sealed ball-bearing guide	
design	compact	compact	robust	robust
size	4	6	6	9
stroke lengths (mm)	10 / 25	25 / 50	50 / 75 / 100	50 / 75 / 100
piston force at 6 bar (N)	80	185	220	360
cylinder diameter (mm)	16	25	25	32
norelem	**20050**	**20050**	**20054**	**20056**

Lifting Units, pneumatic

with aligning guide



Material:
Housing in high-strength aluminium;
stop system steel

Surface finish:
Housing anodized;
stop system hardened

Sample order:
nlm 20050-4010

Note:
Maintenance-free pneumatic lifting units in compact structural shape with cross roll guide. Control by 4/2 or 5/2 directional valve. Drive ensues via compressed air, 4-8 bar, constant, filtered (10 µm), dried, oiled or unoiled. Compressed air connection M5. Modules of the same size can be combined with one another without adapter plates via the precise centring system by means of centring rings 20240.

Repeat accuracy ±0.01 mm.

Accessory:
Shock absorber. Proximitiy switch. Plug connector.



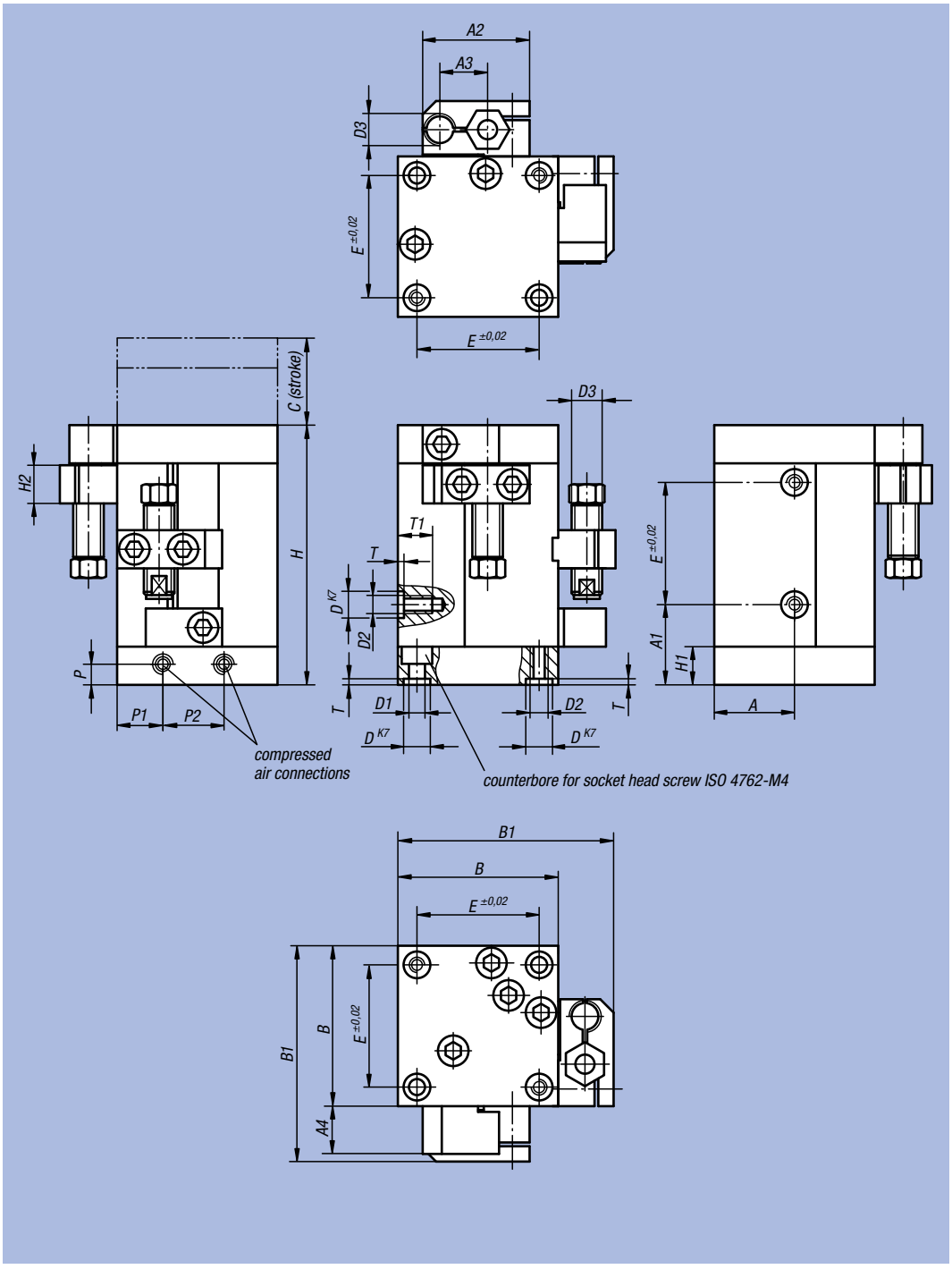

Order No.	Size	C (stroke)	A	A1	A2	A3	A4	B	B1	D	D1	D2	D3	E	H	H1	H2	P	P1	P2	T	T1	kg
20050-4010	4	10	21	21	27,5	12	12,5	42	57	7	4,2	M4	M8x1	32	68	10	10	5	12	16	1,6	6	0,500
20050-4025	4	25	21	39	27,5	12	12,5	42	57	7	4,2	M4	M8x1	32	86	10	10	5	12	16	1,6	6	0,740
20050-6025	6	25	30	38	38	17,5	14	60	78	10	6,4	M6	M14x1	48	104	12	12	6	16	18	2,1	9	1,140
20050-6050	6	50	30	63	38	17,5	14	60	78	10	6,4	M6	M14x1	48	129	12	12	6	16	18	2,1	9	1,320

Order No.	Size	Piston force at 6 bar (N)	Retraction force at 6 bars (N)	Cylinder-Ø	Air consumption per cycle at 6 bar (ccm)	Suitable shock absorber	Suitable proximitiy switch	Suitable plug connector
20050-4010	4	80	55	16	3,7	26300-0810008	20900-020X5000	-
20050-4025	4	80	55	16	9,3	26300-0810008	20900-020X5000	-
20050-6025	6	185	175	25	23,8	26310-1410012	20915-020	20950-010X2000
20050-6050	6	185	175	25	47,7	26310-1410012	20915-020	20950-010X2000

Lifting Units, pneumatic

with aligning guide

Load data

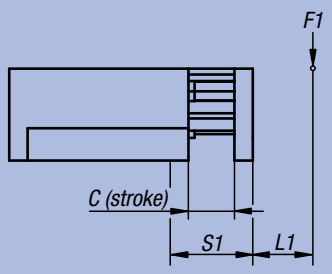

M1 = (S1 + L1) x F1

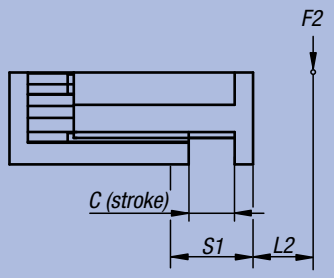

M2 = (S1 + L2) x F2

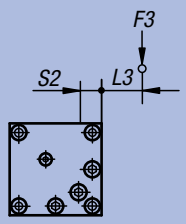

M3 = (S2 + L3) x F3

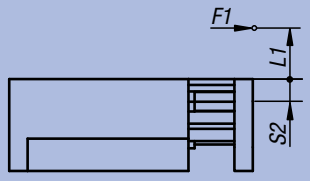

M1 = (S2 + L1) x F1

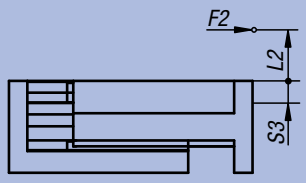

M2 = (S3 + L2) x F2

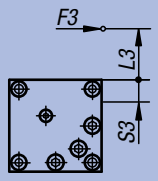

M3 = (S3 + L3) x F3

$$\frac{M1_{eff}}{M1_{zul}} + \frac{M2_{eff}}{M2_{zul}} + \frac{M3_{eff}}{M3_{zul}} \leq 1$$

Calculation of the lifespan:

$$L = \left(\frac{M_{zul}}{M_{eff}}\right)^3 \times 10^5$$

L = lifespan (m)
M_{zul} = permissible torque (Nm)
M_{eff} = calculated torque (Nm)

Order No.	Size	M1 Nm	M2 Nm	M3 Nm	S1	S2	S3	Dynamic base loads N	Static base loads N
20050-4010	4	12,5	12,5	13,5	19 + C/2 (stroke)	10	16,5	1435	1435
20050-4025	4	15	15	18	26 + C/2 (stroke)	10	16,5	1640	1640
20050-6025	6	33	33	56	33 + C/2 (stroke)	11	17	2600	2600
20050-6050	6	33	33	56	45 + C/2 (stroke)	11	17	2600	2600

Lifting Units, pneumatic

with circular channels



Material:
Housing in high-strength aluminium;
stop system steel

Surface finish:
Housing anodized;
stop system hardened

Sample order:
nlm 20054-6050

Note:
Maintenance-free pneumatic lifting units in robust structural shape with gasketed ball guide. Control by 4/2 or 5/2 directional valve. Drive ensues via compressed air, 4-8 bar, constant, filtered (10 µm), dried, oiled or unoiled. Compressed air connection M5. Modules of the same size can be combined with one another without adapter plates via the precise centring system by means of centring rings 20240.

Repeat accuracy ±0.02 mm.

On request:
Lifting units with shorter strokes available.

Accessory:
Shock absorber. Proximitiy switch. Plug connector.

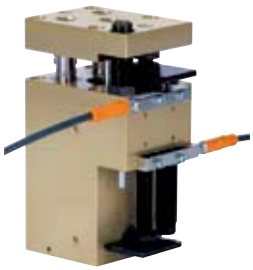

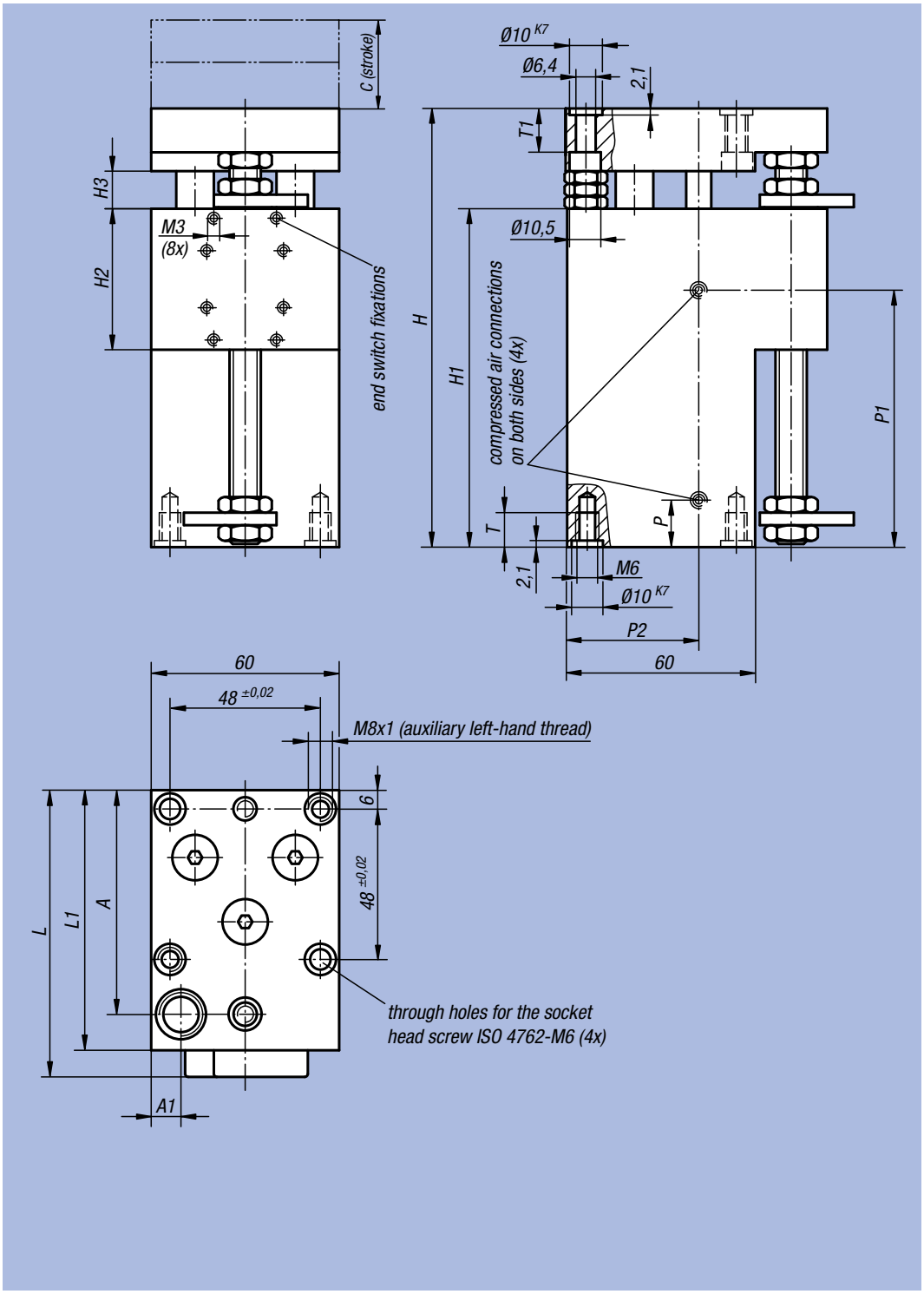

Order No.	Size	C (stroke)	A	A1	H	H1	H2	H3	L	L1	P	P1	P2	T	T1	kg
20054-6050	6	50	71,5	10	140	108	45	12	92	83	15	83	41,5	16	13	1,600
20054-6075	6	75	71,5	10	165	133	45	12	92	83	15	108	41,5	16	13	2,000
20054-6100	6	100	71,5	10	190	158	45	12	92	83	15	133	41,5	16	13	2,400

Order No.	Size	Piston force at 6 bar (N)	Retraction force at 6 bars (N)	Cylinder-Ø	Air consumption per cycle at 6 bar (ccm)	Suitable shock absorber	Suitable proximitiy switch	Suitable plug connector
20054-6050	6	220	200	25	33	26310-1410012	20905-010	20950-010X2000
20054-6075	6	220	200	25	50	26310-1410012	20905-010	20950-010X2000
20054-6100	6	220	200	25	66	26310-1410012	20905-010	20950-010X2000

Lifting Units, pneumatic

with circular channels

Load data

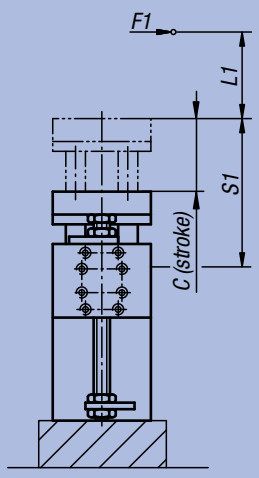

M1 = (S1 + L1) x F1

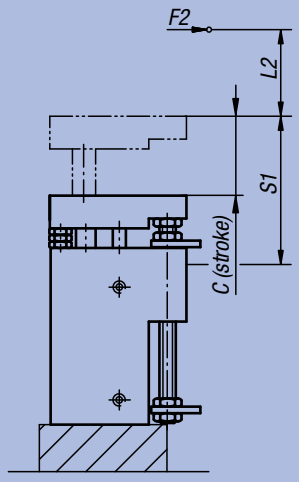

M2 = (S1 + L2) x F2

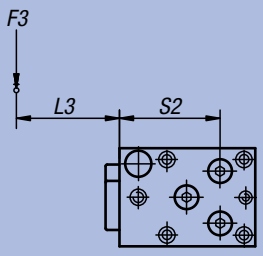

M3 = (S2 + L3) x F3

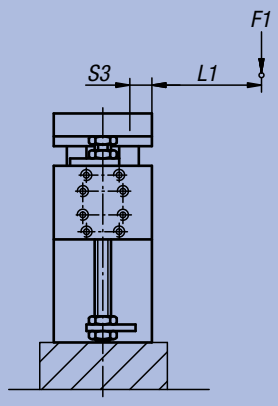

M1 = (S3 + L1) x F1

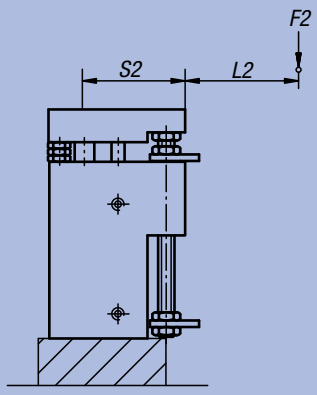

M2 = (S2 + L2) x F2

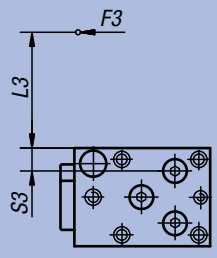

M3 = (S3 + L3) x F3

$$\frac{M1_{eff}}{M1_{zul}} + \frac{M2_{eff}}{M2_{zul}} + \frac{M3_{eff}}{M3_{zul}} \leq 1$$

Calculation of the lifespan:

$$L = \left(\frac{M_{zul}}{M_{eff}}\right)^3 \times 10^5$$

L = lifespan (m)
M_{zul} = permissible torque (Nm)
M_{eff} = calculated torque (Nm)

Order No.	Size	M1 Nm	M2 Nm	M3 Nm	S1	S2	S3
20054-6050	6	28	28	30	46 + C/2 (stroke)	61	14
20054-6075	6	28	28	30	46 + C/2 (stroke)	61	14
20054-6100	6	28	28	30	46 + C/2 (stroke)	61	14

Lifting Units, pneumatic

with circular channels



Material:
Housing in high-strength aluminium;
stop system steel

Surface finish:
Housing anodized;
stop system hardened

Sample order:
nlm 20056-9050

Note:
Maintenance-free pneumatic lifting units in robust structural shape with gasketed ball guide. Control by 4/2 or 5/2 directional valve. Drive ensues via compressed air, 4-8 bar, constant, filtered (10 µm), dried, oiled or unoiled. Compressed air connection R1/8. Modules of the same size can be combined with one another without adapter plates via the precise centring system by means of centring rings 20240.

Repeat accuracy ±0.02 mm.

On request:
Lifting units with shorter strokes available.

Accessory:
Shock absorber. Proximitiy switch. Plug connector.

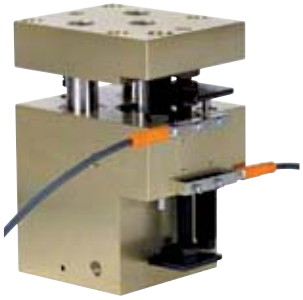

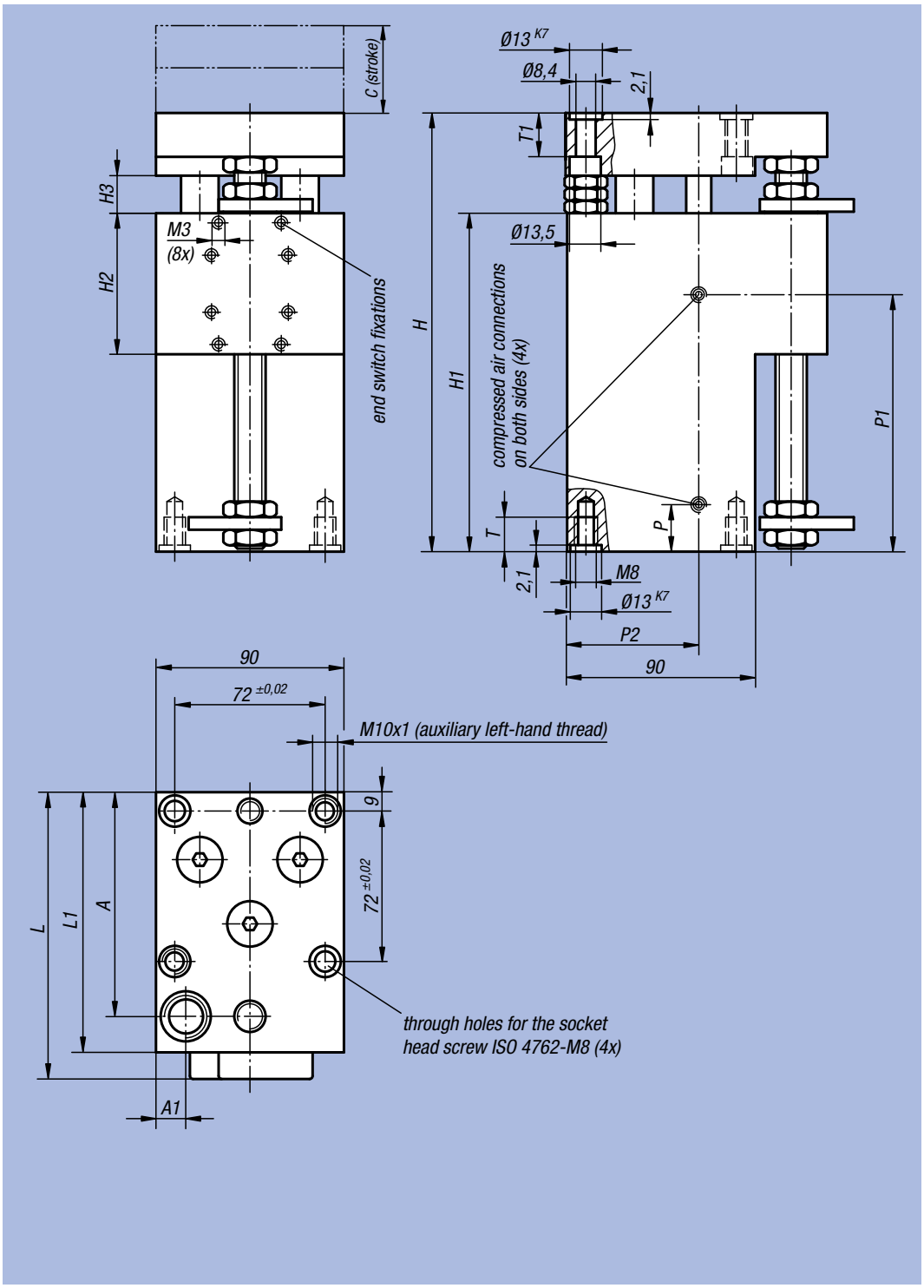

Order No.	Size	C (stroke)	A	A1	H	H1	H2	H3	L	L1	P	P1	P2	T	T1	kg
20056-9050	9	50	101,5	24,5	150	108	45	12	121	113	15,5	83	68	16	13	3,800
20056-9075	9	75	101,5	24,5	175	133	45	12	121	113	15,5	108	68	16	13	4,200
20056-9100	9	100	101,5	24,5	200	158	45	12	121	113	15,5	133	68	16	13	4,600

Order No.	Size	Piston force at 6 bar (N)	Retraction force at 6 bars (N)	Cylinder-Ø	Air consumption per cycle at 6 bar (ccm)	Suitable shock absorber	Suitable proximitiy switch	Suitable plug connector
20056-9050	9	360	325	32	56	26310-1410012	20905-010	20950-010X2000
20056-9075	9	360	325	32	84	26310-1410012	20905-010	20950-010X2000
20056-9100	9	360	325	32	112	26310-1410012	20905-010	20950-010X2000

Lifting Units, pneumatic

with circular channels

Load data

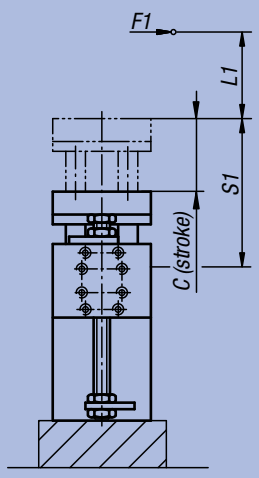

M1 = (S1 + L1) x F1

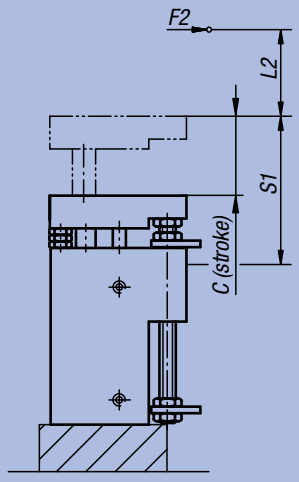

M2 = (S1 + L2) x F2

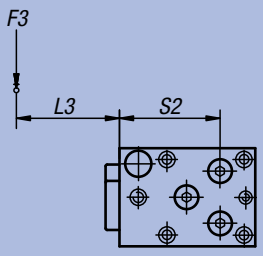

M3 = (S2 + L3) x F3

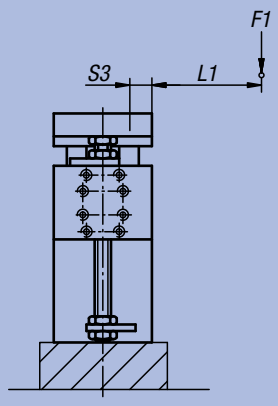

M1 = (S3 + L1) x F1

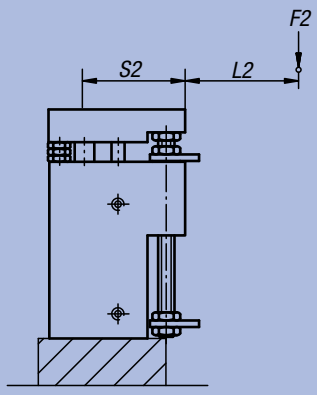

M2 = (S2 + L2) x F2

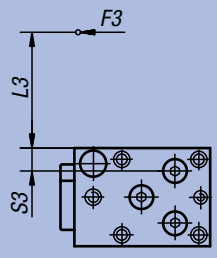

M3 = (S3 + L3) x F3

$$\frac{M1_{eff}}{M1_{zul}} + \frac{M2_{eff}}{M2_{zul}} + \frac{M3_{eff}}{M3_{zul}} \leq 1$$

Calculation of the lifespan:

$$L = \left(\frac{M_{zul}}{M_{eff}}\right)^3 \times 10^5$$

L = lifespan (m)
M_{zul} = permissible torque (Nm)
M_{eff} = calculated torque (Nm)

Order No.	Size	M1 Nm	M2 Nm	M3 Nm	S1	S2	S3
20056-9050	9	43	43	72	57 + C/2 (stroke)	73	20
20056-9075	9	43	43	72	57 + C/2 (stroke)	73	20
20056-9100	9	43	43	72	57 + C/2 (stroke)	73	20

Technical Information for Rotary Modules, pneumatic

Compact and heavy-duty rotary modules open up many fields of application. In order to get at a user-defined point within a range, they are, in combination with linear modules, an indispensable component.
The rotary modules can be set in any assembly position. The extremely compact design of the rotary modules allow for high load bearing capacity in all directions for an exacting rigidity of the entire system. The 0° – 190° rotation angle for all models is continuously adjustable. To realise a third position, intermediate positions are available as accessories.

– cylinder diameter: 10 mm – 38 mm.
– axial load: 280 N – 1.800 N.
– radial load: 220 N – 2.400 N.
– repeat accuracy ±0.01°.
– rotary angle continuously adjustable.
– play-free end positions via dual loaded drive cylinders with secured pinion steering racks drive.
– many applications covered via coordinated increases in torque per size.
– also available for small installation spaces and in a heavy-duty version.
– secured drive via rated capacity limiter.

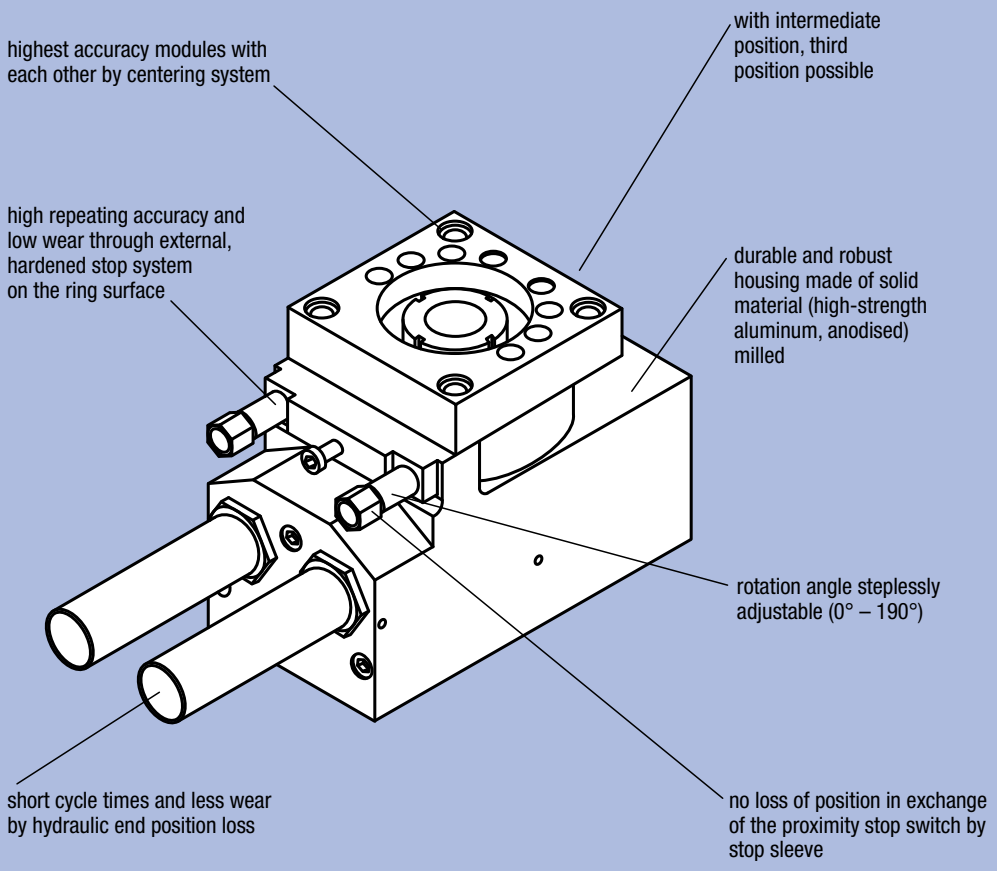

Swing times		
norelem	**load in kg**	**time/complete cycle**
20060-014	0,250	0,3 s
20060-024	0,400	0,7 s
20062-016	1,500	0,8 s

The specified guide values for cycle times were ascertained under operation-specific conditions and represent actual values.

Selection overview						
design	for small available spaces			heavy-duty		heavy-duty
driving torque	0,28	0,94	3,5	6,5	12	24
rotation angle	0° – 190°	0° – 190°	0° – 190°	0° – 190°	0° – 190°	0° – 190°
axial load (N)	300	280	350	1100	1800	1800
radial load (N)	220	350	450	1600	2400	2400
norelem	**20060-014**	**20060-024**	**20062-016**	**20062-026**	**20064-019**	**20064-029**

Rotary Module, pneumatic



Material:
Housing in high-strength aluminium;
stop system steel

Surface finish:
Housing anodized;
stop system hardened

Sample order:
nlm 20060-014

Note:
Maintenance-free pneumatic rotary module for small installation spaces with dual pressurised drive cylinder. Control by 4/2 or 5/2 directional valve. Drive ensues via compressed air, 4-8 bar, constant, filtered (10 µm), dried, oiled or unoiled. Compressed air connection M5.
Modules of the same size can be combined with one another without adapter plates via the precise centring system by means of centring rings 20240.

The 0° – 190° rotation angle is continuously adjustable.

Repeat accuracy ±0.01°.

Accessory:
Shock absorber. Proximitiy switch. Plug connector.



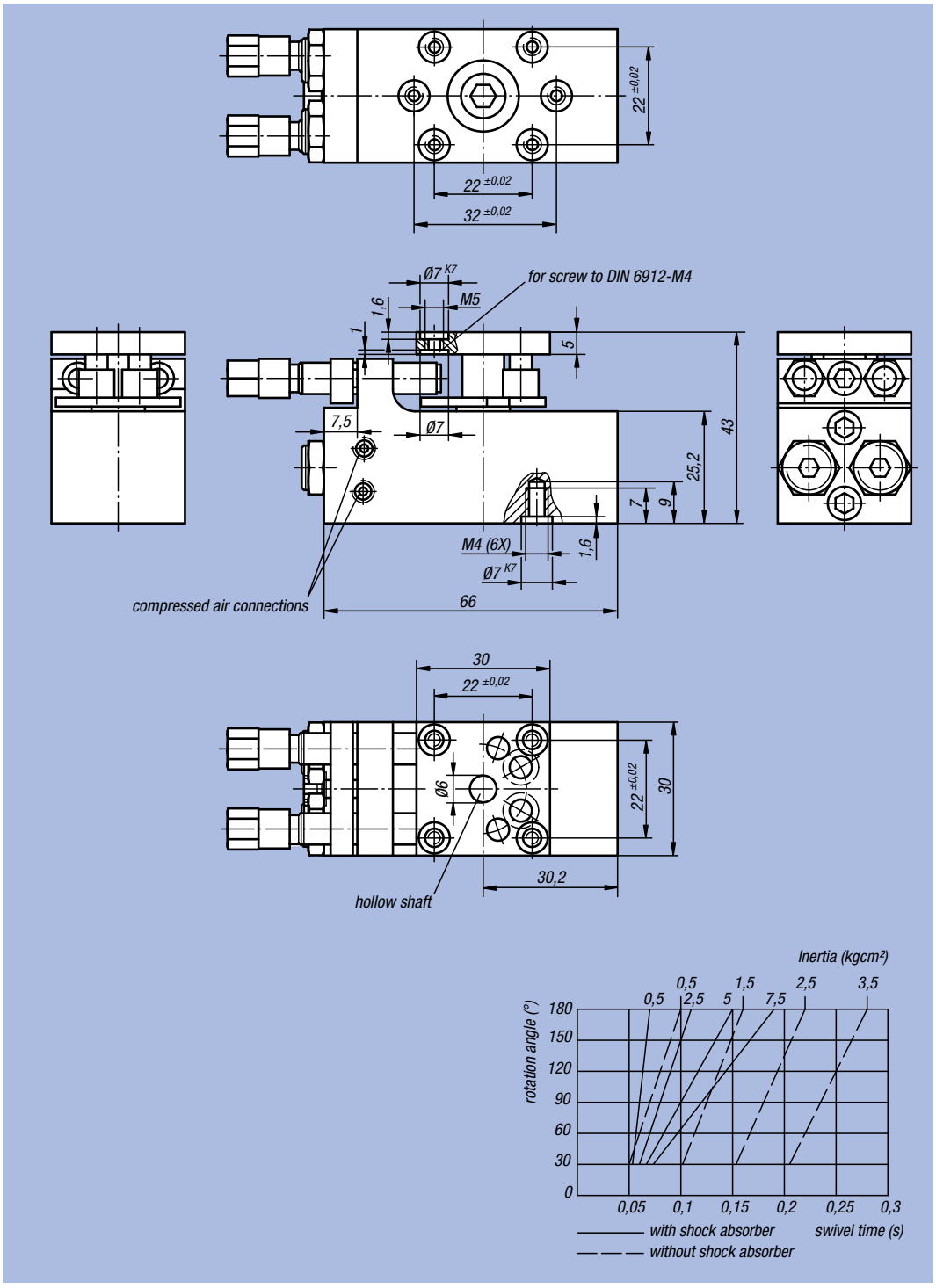

Order No.	Size	Driving torque Nm	Rotation angle	Axial load N	Radial load N	Cylinder-Ø	Air consumption per cycle at 6 bar (ccm)	kg
20060-014	4	0,28	0° - 190°	300	220	2 x 10	5	0,240

Order No.	Size	Suitable shock absorber	Suitable proximitiy switch	Suitable plug connector
20060-014	4	26300-1010008	20915-010	20960-010X2000

Rotary Module, pneumatic



Material:
Housing in high-strength aluminium;
stop system steel

Surface finish:
Housing anodized;
stop system hardened

Sample order:
nlm 20060-024

Note:
Maintenance-free pneumatic rotary module with dual pressurised drive cylinder. Control by 4/2 or 5/2 directional valve. Drive ensues via compressed air, 4-8 bar, constant, filtered (10 µm), dried, oiled or unoiled. Compressed air connection M5. Modules of the same size can be combined with one another without adapter plates via the precise centring system by means of centring rings 20240.

The 0° – 190° rotation angle is continuously adjustable.

Repeat accuracy ±0.01°.

Accessory:
Shock absorber. Proximitiy switch. Plug connector.



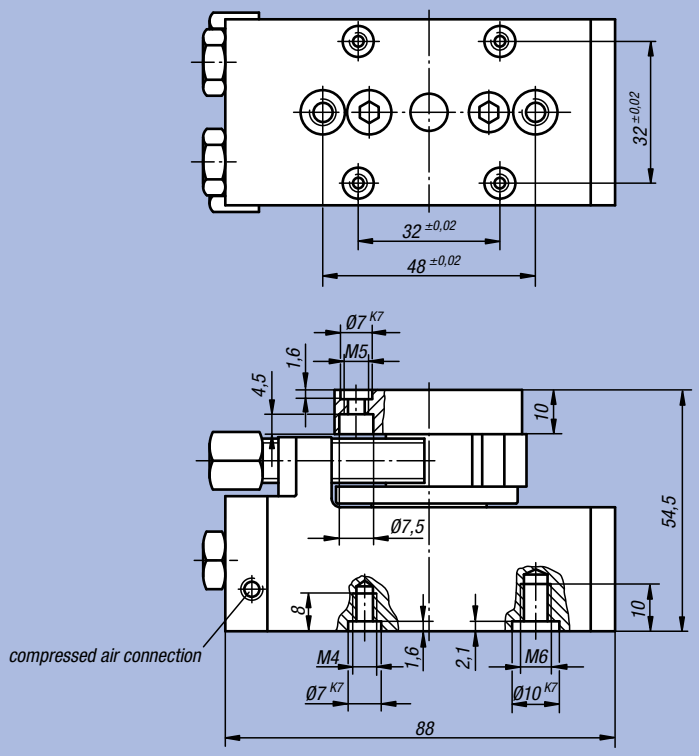

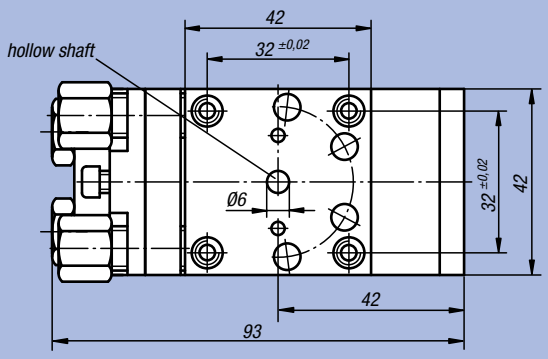

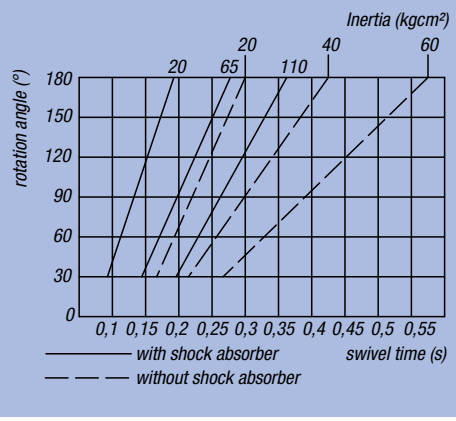

Order No.	Size	Driving torque Nm	Rotation angle	Axial Load N	Radial load N	Cylinder-Ø	Air consumption per cycle at 6 bar (ccm)	kg
20060-024	4	0,94	0° - 190°	280	350	2 x 14	19	0,450

Order No.	Size	Suitable shock absorber	Suitable proximitiy switch	Suitable plug connector
20060-024	4	26300-1210010	20915-020	20950-010X2000

Rotary Module, pneumatic

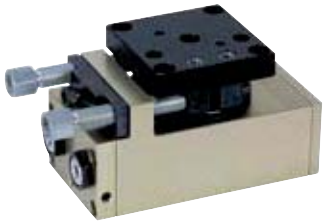

Material:
Housing in high-strength aluminium;
stop system steel

Surface finish:
Housing anodized;
stop system hardened

Sample order:
nlm 20062-016

Note:
Maintenance-free pneumatic rotary module with dual pressurised drive cylinder. Control by 4/2 or 5/2 directional valve. Drive ensues via compressed air, 4-8 bar, constant, filtered (10 µm), dried, oiled or unoiled. Compressed air connection M5. Modules of the same size can be combined with one another without adapter plates via the precise centring system by means of centring rings 20240.

The 0° – 190° rotation angle is continuously adjustable.

Repeat accuracy ±0.01°.

Accessory:
Shock absorber. Proximitiy switch. Plug connector.

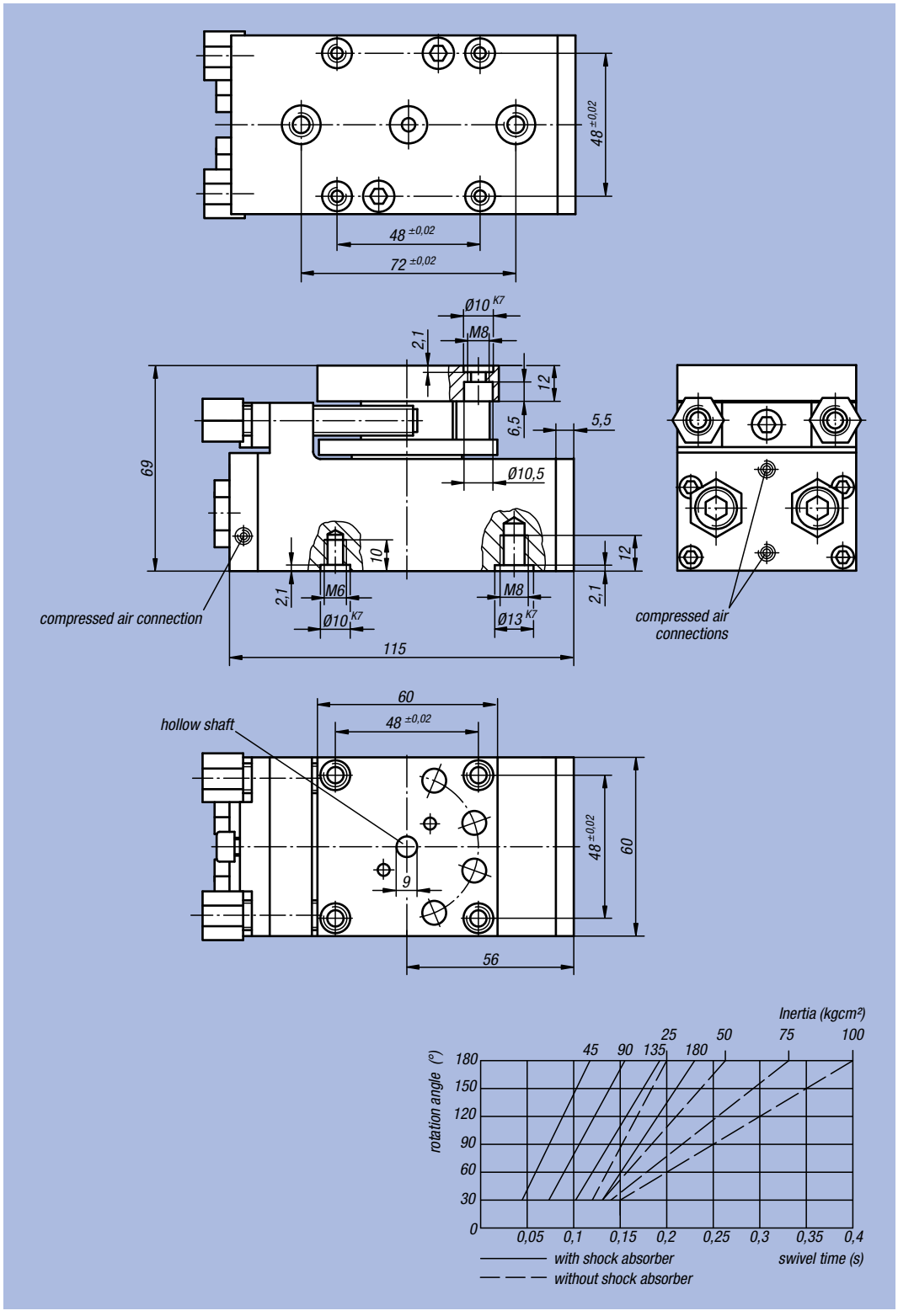



Order No.	Size	Driving torque Nm	Rotation angle	Axial load N	Radial load N	Cylinder-Ø	Air consumption per cycle at 6 bar (ccm)	kg
20062-016	6	3,5	0° - 190°	350	450	2 x 22	45	1,100

Order No.	Size	Suitable shock absorber	Suitable proximitiy switch	Suitable plug connector
20062-016	6	26310-1410012	20915-030	20950-010X2000

Rotary Module, pneumatic

Heavy duty version

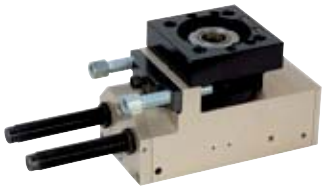

Material:
Housing in high-strength aluminium;
stop system steel

Surface finish:
Housing anodized;
stop system hardened

Sample order:
nlm 20062-026

Note:
Maintenance-free pneumatic rotary module with dual pressurised drive cylinder in heavy duty version. Control by 4/2 or 5/2 directional valve. Drive ensues via compressed air, 4-8 bar, constant, filtered (10 µm), dried, oiled or unoiled. Compressed air connection M5.
Modules of the same size can be combined with one another without adapter plates via the precise centring system by means of centring rings 20240.

The 0° – 190° rotation angle is continuously adjustable.

Repeat accuracy ±0.01°.

Shock absorbers are included in delivery.

Accessory:
Proximitiy switch. Plug connector.



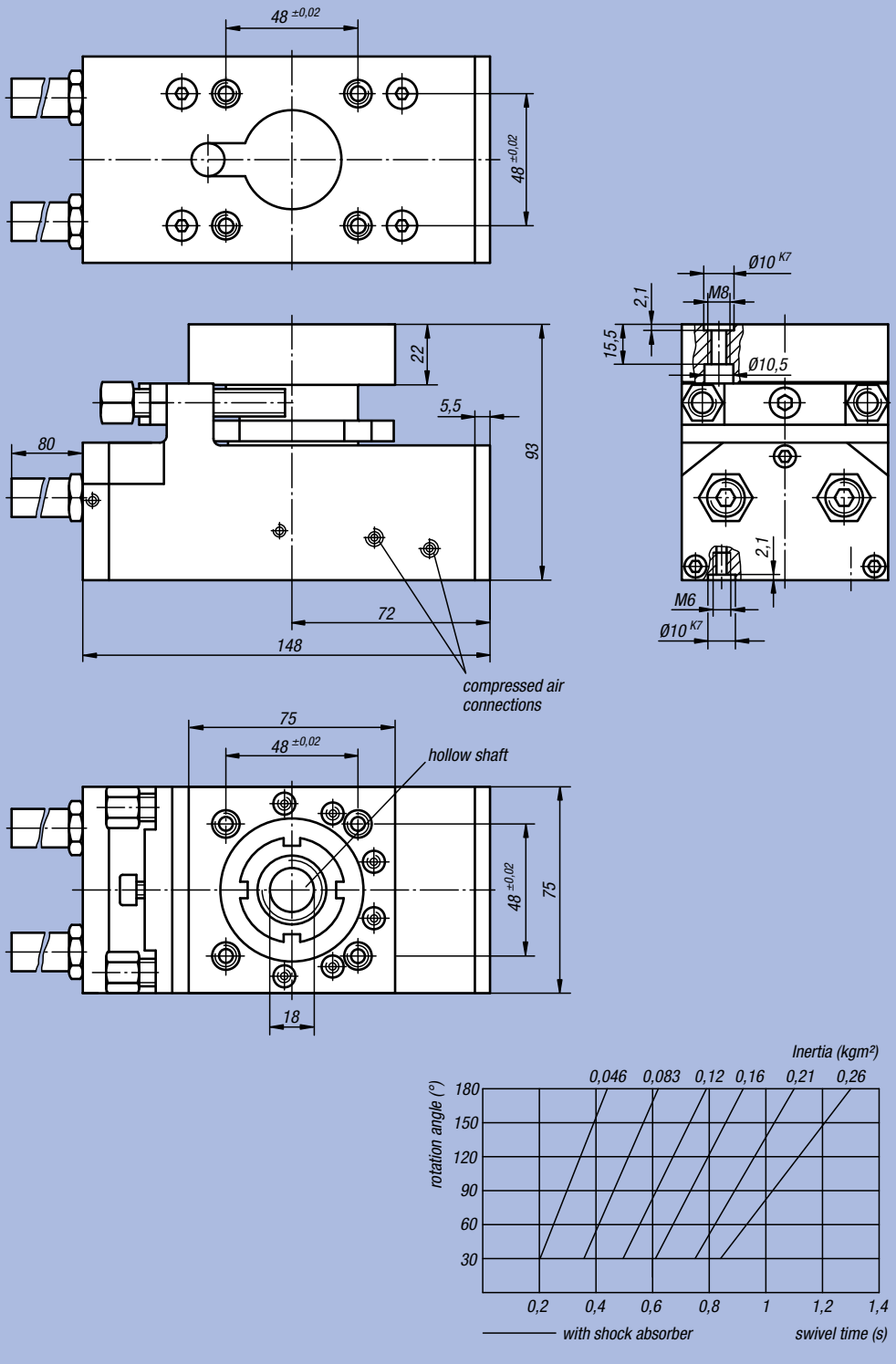

Order No.	Size	Driving torque Nm	Overturning moment max. Nm	Rotation angle	Axial load N	Radial load N	Cylinder-Ø	Air consumption per cycle at 6 bar (ccm)	kg
20062-026	6	6,5	55	0° - 190°	1100	1600	2 x 25	88	2,600

Order No.	Size	Suitable proximitiy switch	Suitable plug connector
20062-026	6	20915-030	20950-010X2000

Rotary Module, pneumatic



Material:
Housing in high-strength aluminium;
stop system steel

Surface finish:
Housing anodized;
stop system hardened

Sample order:
nlm 20064-019

Note:
Maintenance-free pneumatic rotary module with dual pressurised drive cylinder. Control by 4/2 or 5/2 directional valve. Drive ensues via compressed air, 4-8 bar, constant, filtered (10 µm), dried, oiled or unoiled. Compressed air connection R1/8. Modules of the same size can be combined with one another without adapter plates via the precise centring system by means of centring rings 20240.

The 0° – 190° rotation angle is continuously adjustable.

Repeat accuracy ±0.01°.

Shock absorbers are included in delivery.

Accessory:
Proximitiy switch. Plug connector.



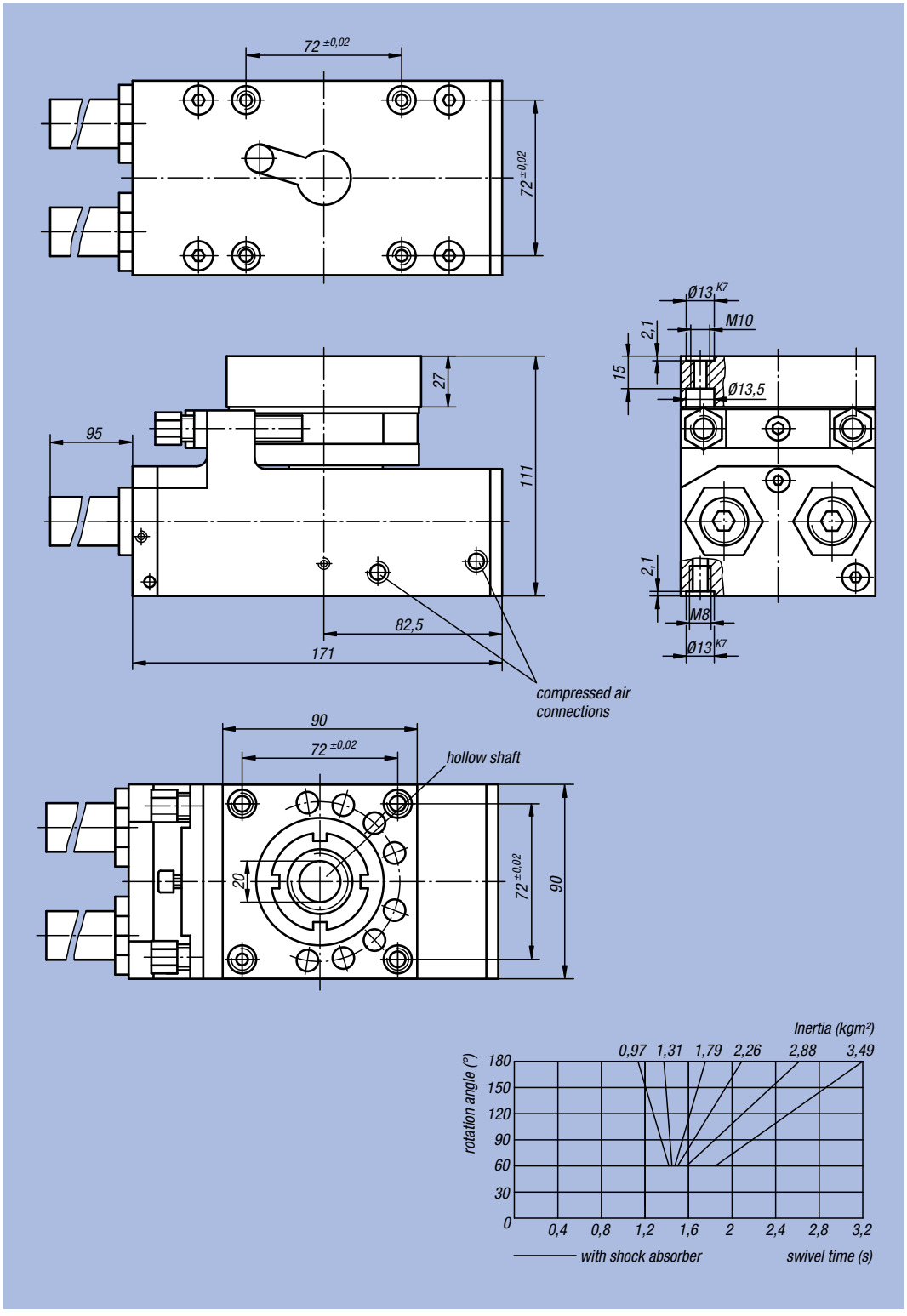

Order No.	Size	Driving torque Nm	Overturning moment max. Nm	Rotation angle	Axial load N	Radial load N	Cylinder-Ø	Air consumption per cycle at 6 bar (ccm)	kg
20064-019	9	12	110	0° - 190°	1800	2400	2 x 32	161	4,100

Order No.	Size	Suitable proximitiy switch	Suitable plug connector
20064-019	9	20915-030	20950-010X2000

Rotary Module, pneumatic

Heavy duty version



Material:
Housing in high-strength aluminium;
stop system steel

Surface finish:
Housing anodized;
stop system hardened

Sample order:
nlm 20064-029

Note:
Maintenance-free pneumatic rotary module with dual pressurised drive cylinder in heavy duty version. Control by 4/2 or 5/2 directional valve. Drive ensues via compressed air, 4-8 bar, constant, filtered (10 µm), dried, oiled or unoiled. Compressed air connection R1/8.
Modules of the same size can be combined with one another without adapter plates via the precise centring system by means of centring rings 20240.

The 0° – 190° rotation angle is continuously adjustable.

Repeat accuracy ±0.01°.

Shock absorbers are included in delivery.

Accessory:
Proximitiy switch. Plug connector.



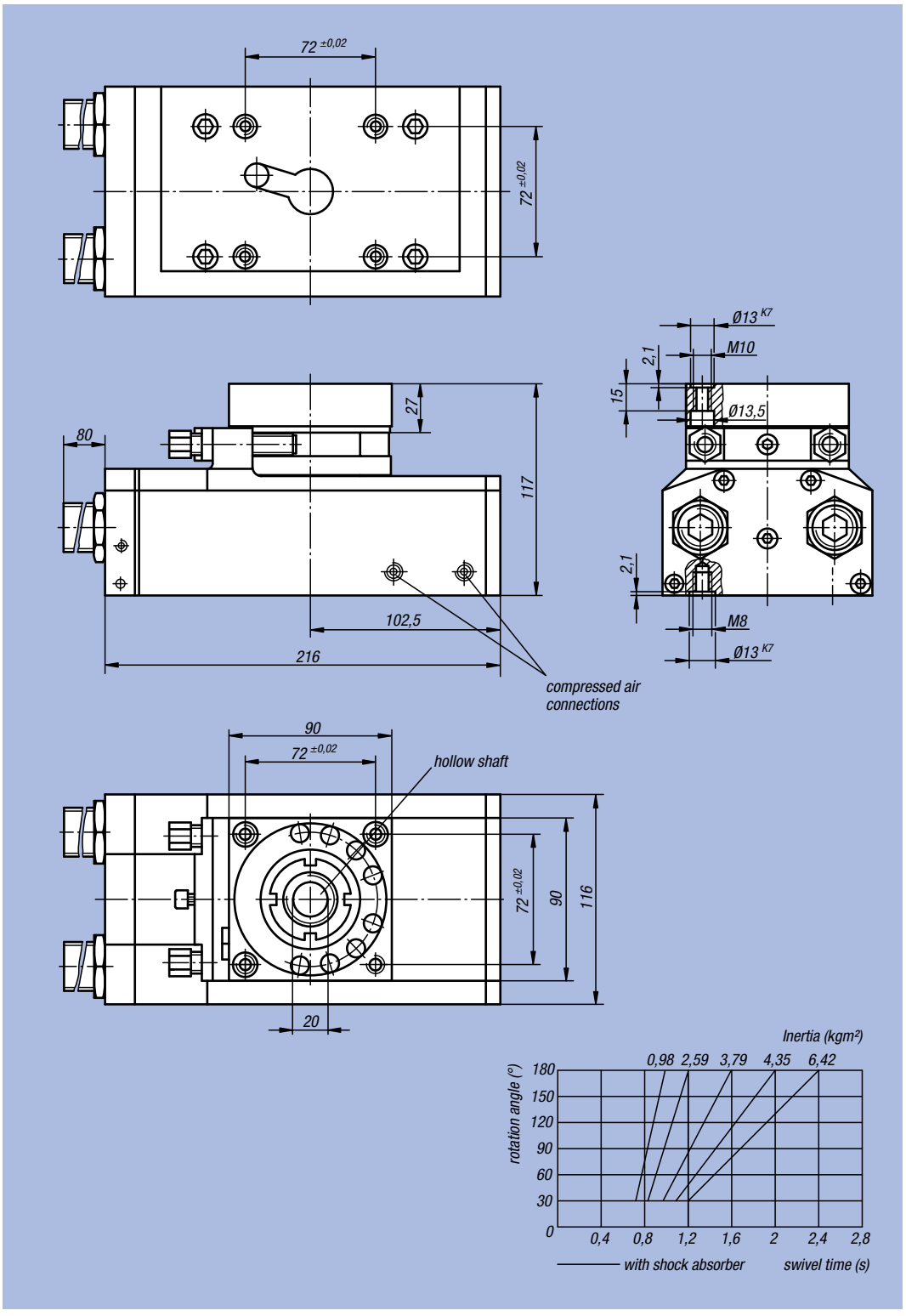

Order No.	Size	Driving torque Nm	Overturning moment max. Nm	Rotation angle	Axial load N	Radial load N	Cylinder-Ø	Air consumption per cycle at 6 bar (ccm)	kg
20064-029	9	24	110	0° - 190°	1800	2400	2 x 38	303	7,000

Order No.	Size	Suitable proximitiy switch	Suitable plug connector
20064-029	9	20915-030	20950-010X2000

Inclined Position

for Rotary Module 20060-024

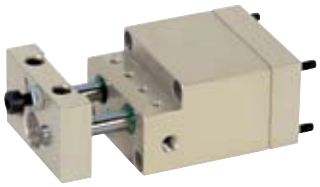

Material:
Housing in high-strength aluminium

Surface finish:
Housing anodized

Sample order:
nlm 20080-014

Note:
Maintenance-free pneumatic inclined position.

For implementation of a third position with Rotary Module 20060-024.

Control by 3/2 directional valve. Drive ensues via compressed air, 4-8 bar, constant, filtered (10 µm), dried, oiled or unoiled. Compressed air connection M5.

Adjustment range ±20° based on 90°.

Repeat accuracy ±0.01°.

Proximity switch, connector cable and exhaust throttle are included in delivery.

Accessory:
Shock absorber.



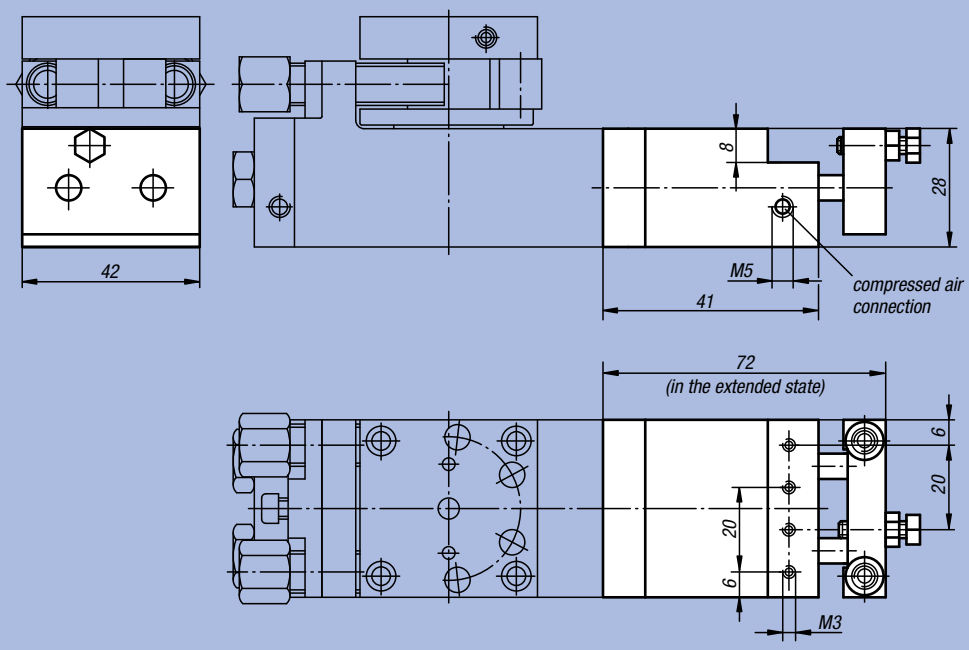

Order No.	Size	Driving torque Nm	Cylinder-Ø	Air consumption per cycle at 6 bar (ccm)	kg	Suitable shock absorber
20080-014	4	0,8	2 x 16	4	0,180	26300-1210010

Inclined Position

for Rotary Module 20062-016

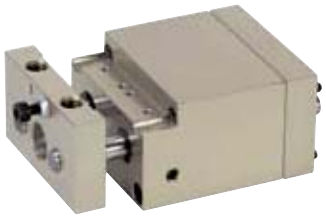

Material:
Housing in high-strength aluminium

Surface finish:
Housing anodized

Sample order:
nlm 20082-016

Note:
Maintenance-free pneumatic inclined position.

For implementation of a third position with Rotary Module 20062-016.

Control by 3/2 directional valve. Drive ensues via compressed air, 4-8 bar, constant, filtered (10 µm), dried, oiled or unoiled. Compressed air connection M5.

Adjustment range ±20° based on 90°.

Repeat accuracy ±0.01°.

Proximity switch, connector cable and exhaust throttle are included in delivery.

Accessory:
Shock absorber.



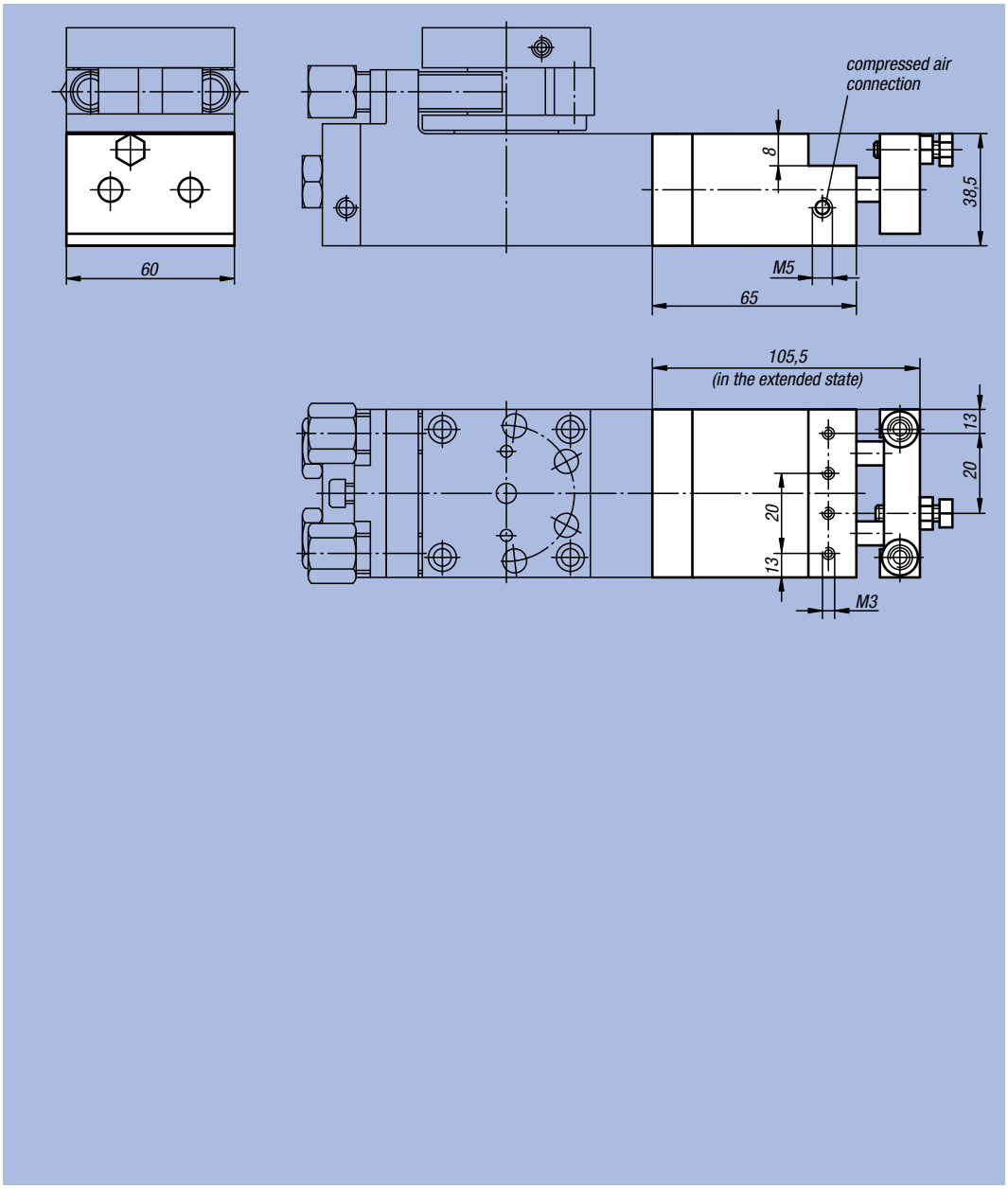

Order No.	Size	Driving torque Nm	Cylinder-Ø	Air consumption per cycle at 6 bar (ccm)	kg	Suitable shock absorber
20082-016	6	3,5	2 x 25	22	0,400	26310-1410012

Inclined Position

for Rotary Module 20062-026

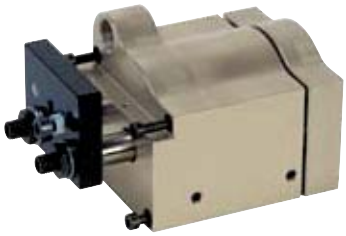

Material:
Housing in high-strength aluminium

Surface finish:
Housing anodized

Sample order:
nlm 20082-026

Note:
Maintenance-free pneumatic inclined position.

For implementation of a third position with Rotary Module 20062-026.

Control by 5/2 directional valve. Drive ensues via compressed air, 4-8 bar, constant, filtered (10 µm), dried, oiled or unoiled. Compressed air connection M5.

Adjustment range ±20° based on 90°.

Repeat accuracy ±0.01°.

Proximity switch, connector cable and exhaust throttle are included in delivery.

Accessory:
Shock absorber.

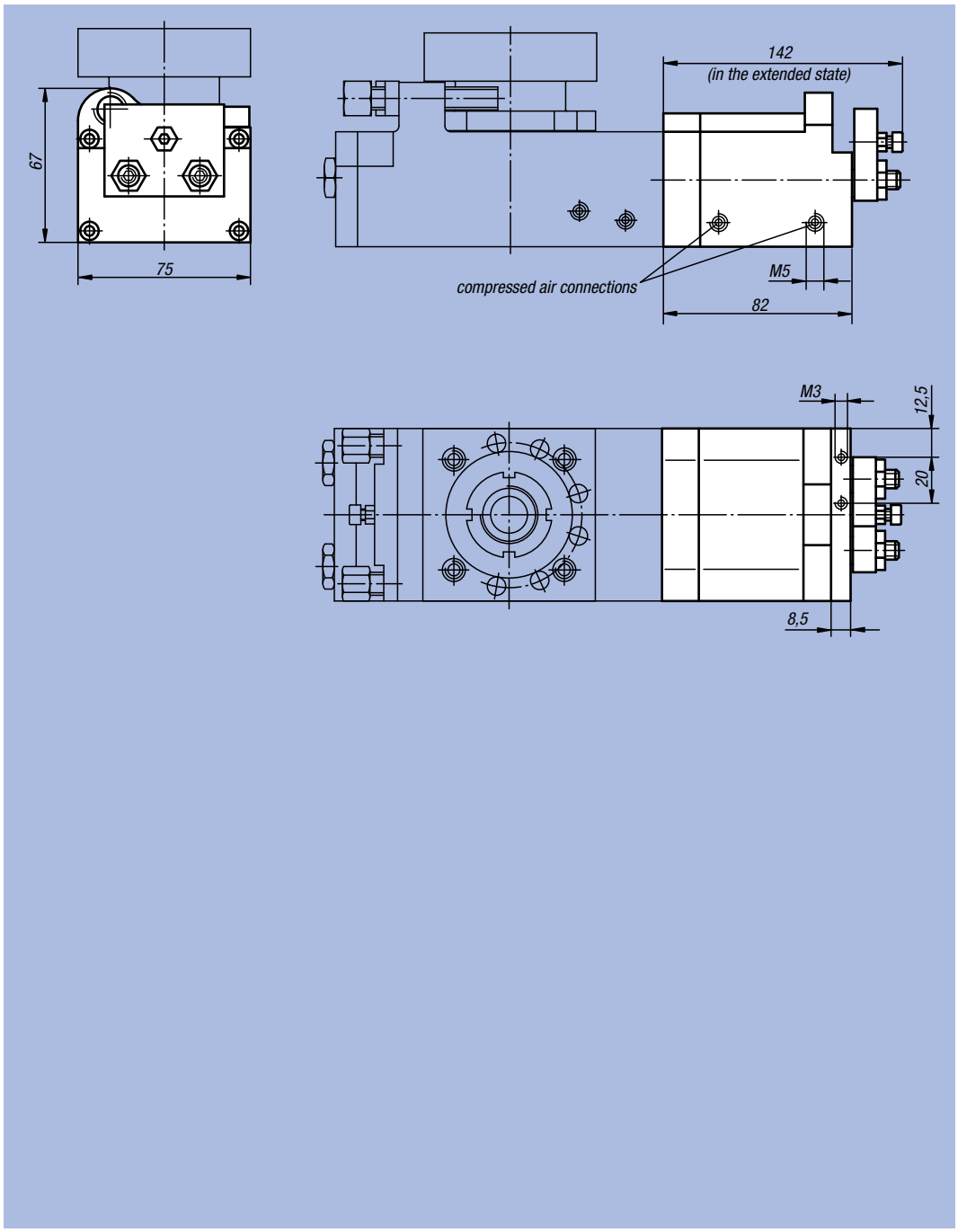



Order No.	Size	Torque (swivel unit, pressure-free) Nm	Torque (swivel unit, pressurised at 6 bars) Nm	Cylinder-Ø	Air consumption per cycle at 6 bar (ccm)	kg	Suitable shock absorber
20082-026	6	10,13	1,92	50	104	0,950	26310-1410012

Inclined Position

for Rotary Module 20064-019



Material:
Housing in high-strength aluminium

Surface finish:
Housing anodized

Sample order:
nlm 20084-019

Note:
Maintenance-free pneumatic inclined position.

For implementation of a third position with Rotary Module 20064-019.

Control by 5/2 directional valve. Drive ensues via compressed air, 4-8 bar, constant, filtered (10 µm), dried, oiled or unoiled. Compressed air connection R1/8.

Adjustment range ±20° based on 90°.

Repeat accuracy ±0.01°.

Proximity switch, connector cable and exhaust throttle are included in delivery.

Accessory:
Shock absorber.



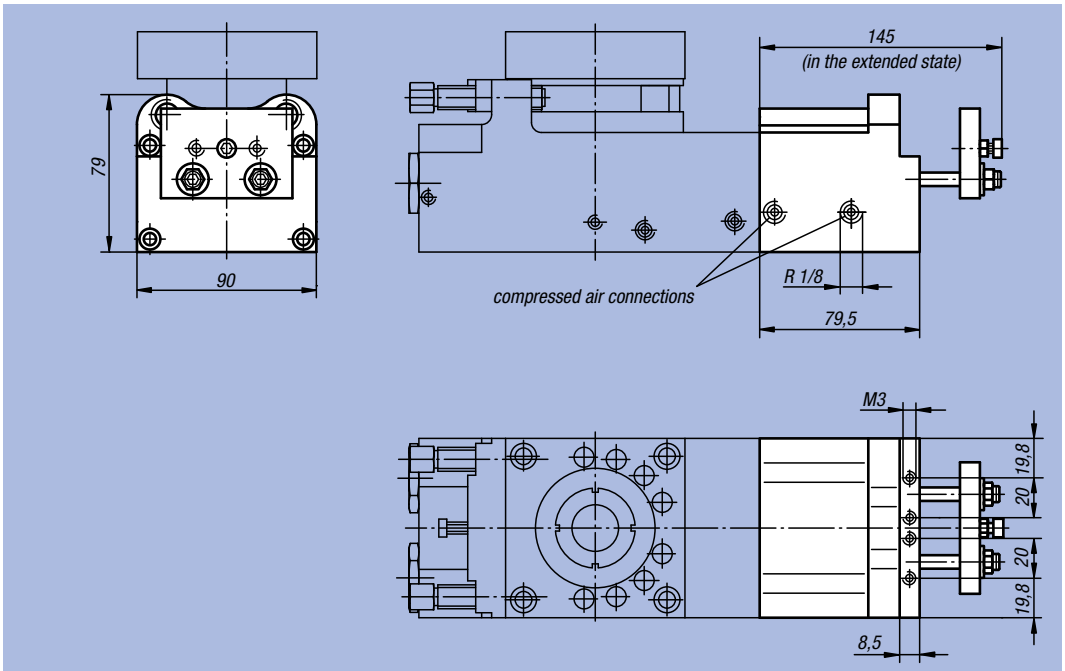

Order No.	Size	Torque (swivel unit, pressure-free) Nm	Torque (swivel unit, pressurised at 6 bars) Nm	Cylinder-Ø	Air consumption per cycle at 6 bar (ccm)	kg	Suitable shock absorber
20084-019	9	20,26	5,36	63	186	1,250	26310-1410012

Inclined Position

for Rotary Module 20064-029

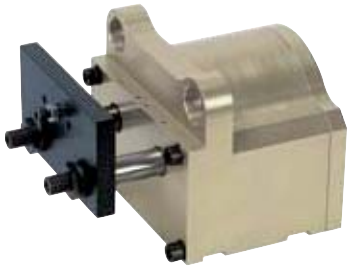

Material:
Housing in high-strength aluminium

Surface finish:
Housing anodized

Sample order:
nlm 20084-029

Note:
Maintenance-free pneumatic inclined position.

For implementation of a third position with Rotary Module 20064-029.

Control by 5/2 directional valve. Drive ensues via compressed air, 4-8 bar, constant, filtered (10 µm), dried, oiled or unoiled. Compressed air connection R1/8.

Adjustment range ±10° based on 90°.

Repeat accuracy ±0.01°.

Proximity switch, connector cable and exhaust throttle are included in delivery.

Accessory:
Shock absorber.

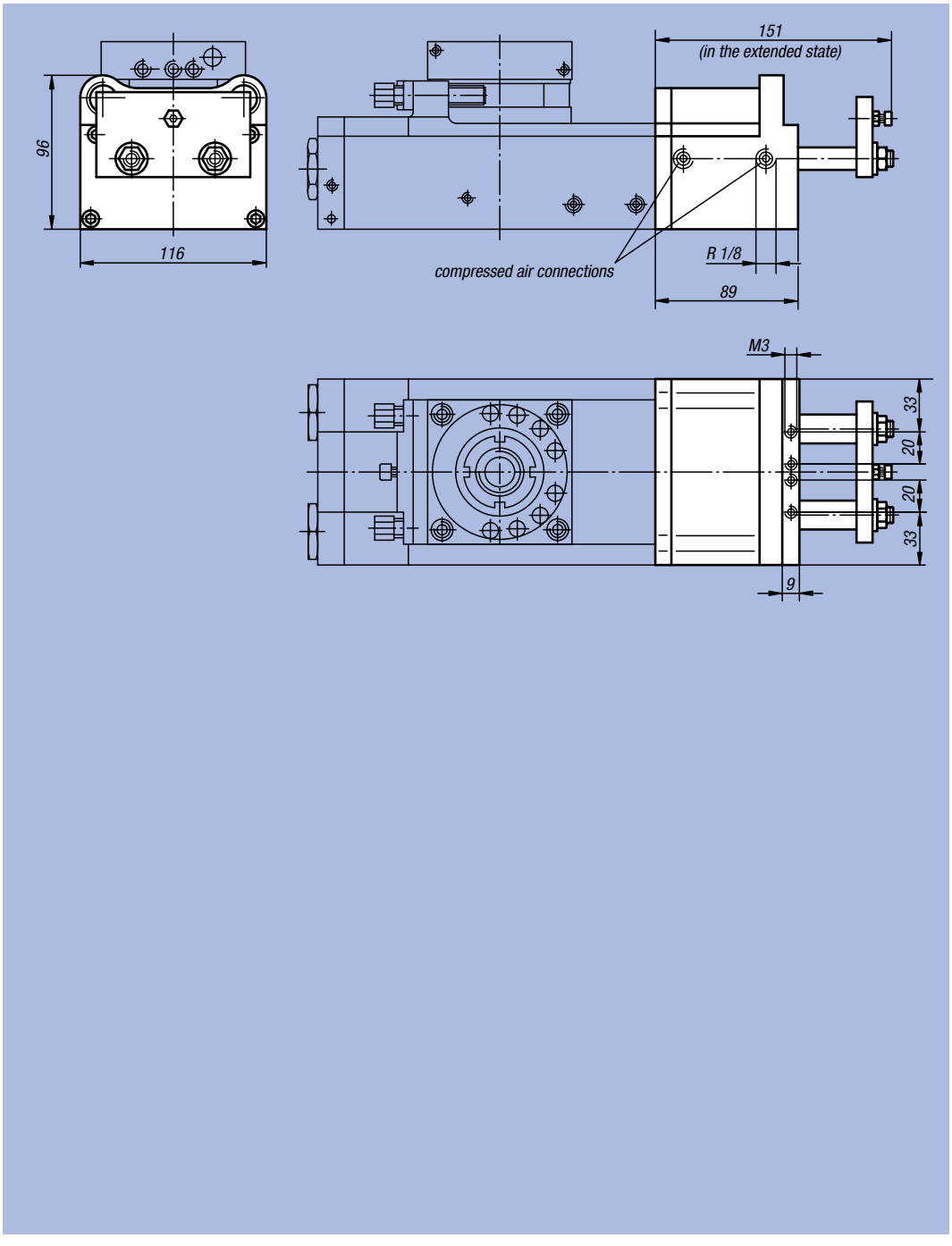

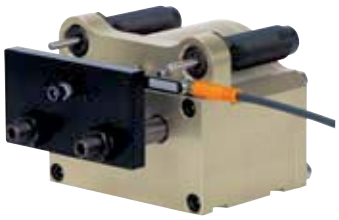

Order No.	Size	Torque (swivel unit, pressure-free) Nm	Torque (swivel unit, pressurised at 6 bars) Nm	Cylinder-Ø	Air consumption per cycle at 6 bar (ccm)	kg	Suitable shock absorber
20084-029	9	40	8	80	186	1,600	26300-2015016

Notes:

Technical Information for Gripping Modules

The gripping modules can be set in any assembly position. The applications of pneumatic gripping modules in assembly and manufacture are almost limitless. These components can manage a multitude of functions such as centring, feeding, converting and loading. The standardised fastening drill holes make versatile combinations with out other units possible.

– workpiece weight 0.08 kg – 4.74 kg.
– also for particularly robust applications.
– gripping force query open, closed, part gripped.
– steel slip-in guide – hardened and ground, for universal application and long lifespan.

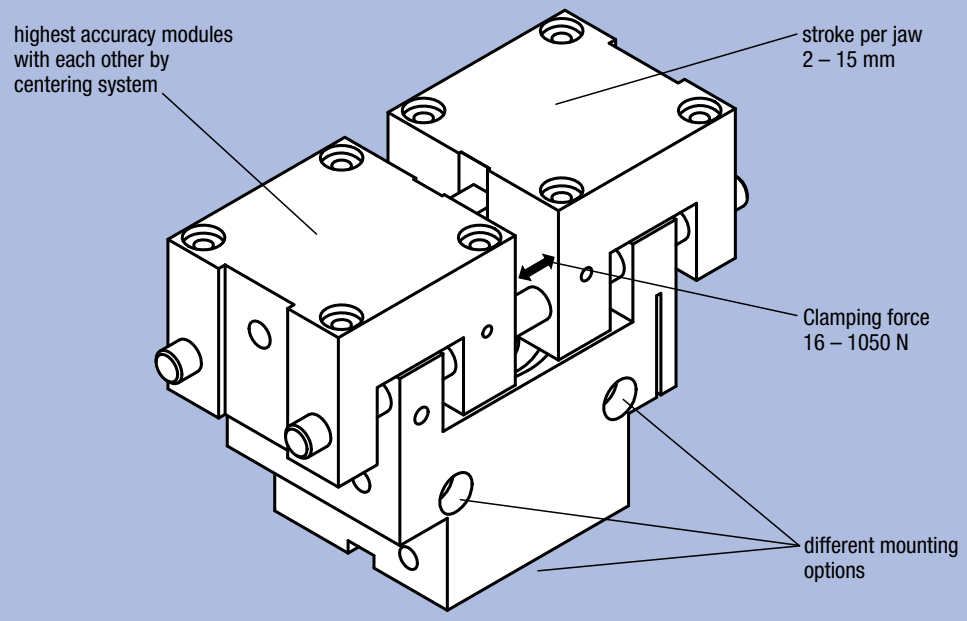

Overview	
type	parallel grippers
guidance	steel slip-in guide
design	robust
stroke per jaw (mm)	2 – 15
clamping force at 6 bar (N)	16 – 1050
workpiece weight (kg)	0,08 – 4,74
finger length max. (mm)	15 – 140
operating principle	connecting rod kinematics
range of application	universal application in clean and easily contaminated environment
norelem	**20100**

Grip Module

Parallel Grippers



Material:
Housing in high-strength aluminium; guide shafts and connecting rod, steel.

Surface finish:
Housing coated with Hart-Coat®. Guide shafts hardened and ground.

Sample order:
nlm 20100-030025

Note:
Maintenance-free pneumatic parallel gripper with connecting rod bell-crank linkage. Control by 4/2 or 5/2 directional valve. Drive ensues via compressed air, 4-8 bar, constant, filtered (10 µm), dried, oiled or unoiled. Fastened absolutely centrically. Selectively fasten on the inside or outside. Proximity switches which are available as accessories can be integrated for end positions feedback.

Repeat accuracy ±0.02 mm.

On request:
Gripping Force Safety Device.

Accessory:
Proximitiy switch. Plug connector.

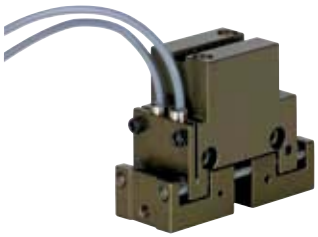

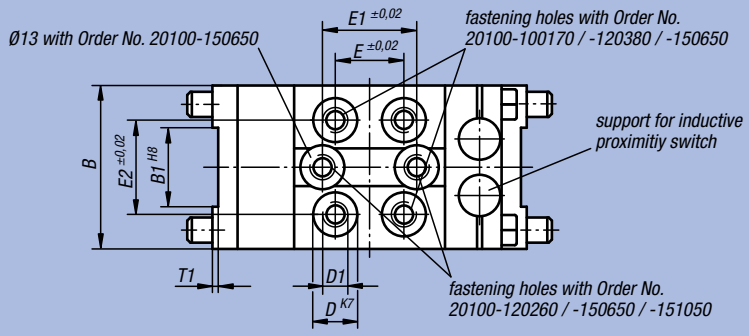

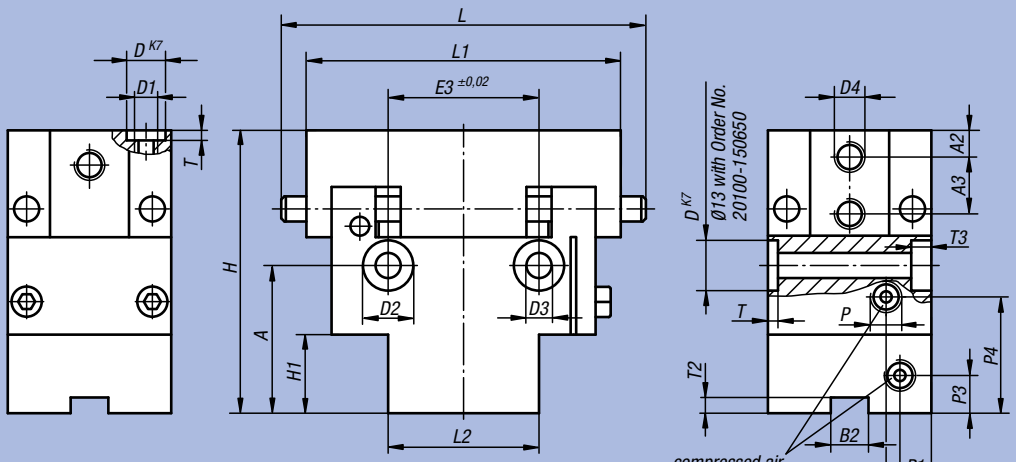

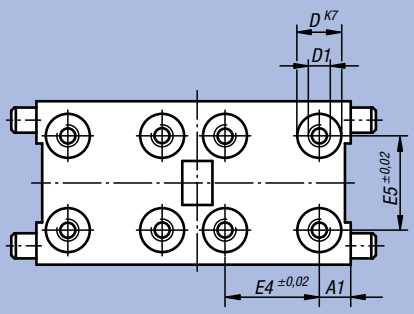

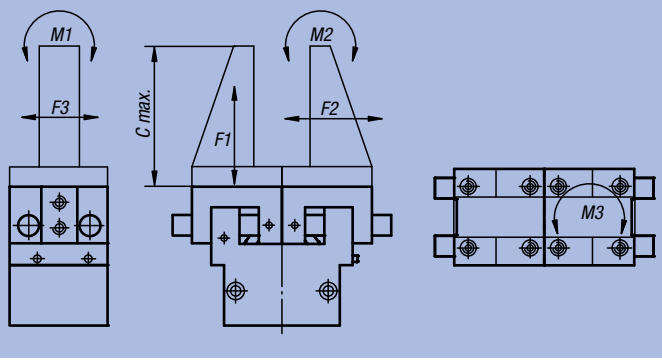

$$\frac{M1_{eff}}{M1_{zul}} + \frac{M2_{eff}}{M2_{zul}} + \frac{M3_{eff}}{M3_{zul}} \leq 1$$

$$\frac{F1_{eff}}{F1_{zul}} + \frac{F2_{eff}}{F2_{zul}} + \frac{F3_{eff}}{F3_{zul}} \leq 1$$

Grip Module

Parallel Grippers

Order No.	A	A1	A2	A3	B	B1	B2	D	D1	D2	D3	D4	E	E1	E2	E3
20100-030025	21,5	5	4,5	-	19	6	-	7	M3	6	3	M3	11	-	11	17,5
20100-040036	24	5	6	-	26	10	6	7	M4	7,5	4,3	M4	15	-	15	24
20100-050085	33,5	5	5	-	28	12	6	7	M4	7,5	4,3	M5	26	-	15	32
20100-100170	22,5	4,5	10	-	40	16	6	7	M4	7,5	4,3	M6	32	-	32	38
20100-120260	20	8	11	-	45	20	-	10	M6	10,5	6,4	M8	48	48	24	48
20100-120380	21	6	9	16	60	25	-	10	M6	10,5	6,4	M8	48	-	48	58
20100-120660	21	6	9	16	60	25	-	10	M6	10,5	6,4	M8	48	-	48	58
20100-150650	27	11	12	20	75	28	-	10	M6	13,5	8,2	M8	48	72	48	72
20100-151050	27	11	12	20	75	28	-	10	M6	13,5	8,2	M8	48	72	48	72

Order No.	E4	E5	H	H1	L	L1	L2	P	P1	P2	P3	P4	T	T1	T2	T3
20100-030025	-	11	40	13	40	34	19	M5	9,5	9,5	4,5	16	1,6	0,5	-	3,5
20100-040036	15	15	45	12,5	60	50	24	M5	4,5	7	6	18,5	1,6	1	2,5	4,2
20100-050085	20	20	56	20	70	60	34	M5	4	7	6,5	28	1,6	1	2,5	4,5
20100-100170	32	32	67	18,5	100	82	42	M5	9	9	6	27	1,6	1,5	2,5	4,5
20100-120260	32	32	81	23,5	120	96	60	R1/8	8	8	8	30,5	2,1	1,5	-	6,5
20100-120380	48	48	87	39	145	120	70	R1/8	15	15	11,5	30	2,1	2	-	6,5
20100-120660	48	48	87	39	145	120	70	R1/8	15	15	11,5	30	2,1	2	-	6,5
20100-150650	48	48	108	47	171	140	90	R1/8	22	22	15	38	2,1	2	-	9
20100-151050	48	48	108	47	171	140	90	R1/8	22	22	15	38	2,1	2	-	9

Order No.	Stroke per jaw	Clamping force at 6 bar (N)	Expanding force at 6 bars (N)	Recommended workpiece weight kg	Cylinder-Ø	Air consumption per cycle at 6 bar (ccm)	Suitable proximitiy switch	Suitable plug connector
20100-030025	3	25	35	0,120	14	0,34	20900-010X2000	-
20100-040036	4	36	46	0,170	16	0,8	20900-030X3000	-
20100-050085	5	85	95	0,400	25	2,5	20900-030X3000	-
20100-100170	10	170	170	0,760	32	8	20900-040	20950-010X2000
20100-120260	12	260	260	1,170	40	15,1	20900-050	20950-010X2000
20100-120380	12	380	380	1,780	50	23,6	20900-040	20950-010X2000
20100-120660	12	660	660	2,960	50	23,6	20900-040	20950-010X2000
20100-150650	15	650	650	3,000	63	46,8	20900-050	20950-010X2000
20100-151050	15	1050	1050	4,740	63	46,8	20900-050	20950-010X2000

Order No.	M1 Nm	M2 Nm	M3 Nm	F1 (N)	F2 (N)	F3 (N)	C max.	Inertia (10^{-3} kgm²)	kg
20100-030025	1,6	1,5	1,5	140	84	140	25	0,00632	0,050
20100-040036	3,9	3,7	1,3	250	82	71	40	0,0278	0,105
20100-050085	6	6	1,6	280	100	72	50	0,0767	0,210
20100-100170	12	14	12	540	150	400	65	0,416	0,600
20100-120260	27	30	12	1100	640	340	80	0,787	0,840
20100-120380	57	67	95	1500	350	2100	110	1,89	1,260
20100-120660	57	67	95	1500	350	2100	110	1,89	1,260
20100-150650	87	94	201	1900	890	3700	140	5,36	2,550
20100-151050	87	94	201	1900	890	3700	140	5,36	2,550

Notes:

Technical Information for Portal Modules, pneumatic

Note:
Pneumatically activated portal modules in lengths as requested.
Drive proceeds via a cylinder without piston rods integrated in the slide.
They are available in three sizes with guide rail or circular channel and strokes up to 5000 mm at a repeating accuracy of ±0.02.

Application:
Portal modules are useable anywhere loads are to be guided precisely. The profile structure with integrated drive cylinder is particularly well suited to cost-efficient integration in manufactory and assembly shops.
At low dead load, the carrier section guarantees extreme rigidity. As a result, the portal module does not require a stabile skeletal structure; it brings its own stability along with it and thus becomes a load-bearing and space-saving component within a total system.

Characteristics:
These portal modules are based on a heavy-duty, stiffened aluminium profile. The use can choose between guide rail or circular channel system.
The structural dimensions of both guidance systems are identical.
The profile modules can be set in any assembly position.

Advantages:
– small coefficients of friction due to rolling friction convert piston force into motion force virtually entirely.
– low deflexion makes high span and wide travel possible.
– optimized sizes with large piston diameters.
– high run accuracy.
– owing to stiffened cantilever aluminium profile, loadable with very heavy loads.
– integrated easy-to-assemble shockabsorber and proximity switch.
– cylinder cover band in steel version (except for 20200-1065X0500).
– optional: several intermediate positions possible.

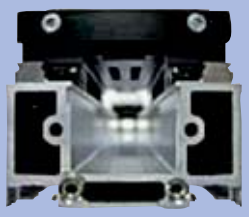

Guide rail

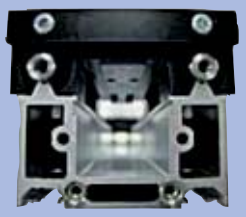

Circular channel

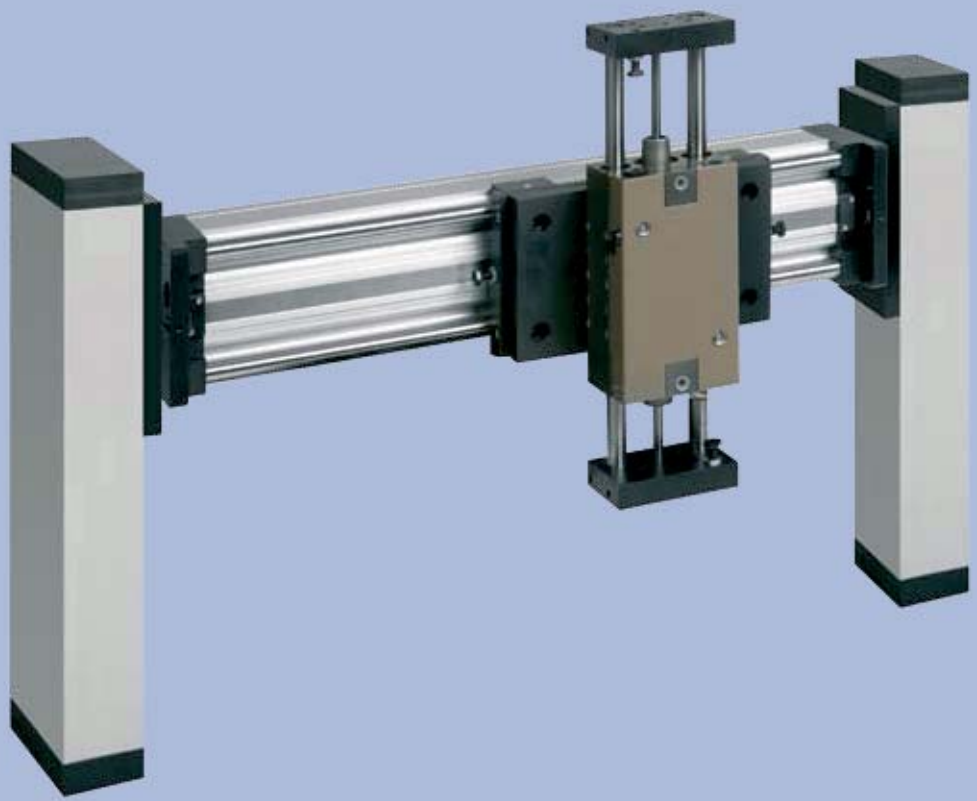

Portal Modules, pneumatic

with aligning guide



Material:
Base body, carriage and flange plate in aluminium alloy; guide rails in steel

Surface finish:
Base body natural finish;
carriage and flange plate anodized;
guide rails hardened

Sample order:
nlm 20200-1065X0500

Note:
Portal modules with ball aligning guide. Drive ensues pneumatically via a rodless pneumatic cylinder. High load rating by use of stiffened cantilever aluminium profile. The modules can be set in any assembly position.
Weight specifications apply in the case of dynamic load.

Repeat accuracy ±0.02 mm.

Temperature range:
+5 °C up to +70 °C.
(+5 °C up to +60 °C with size 65).

On request:
* Other lengths
(stroke C max. 5000 mm)
as well as inclined positions.

Accessory:
Shock absorber. Proximitiy switch. Plug connector.

size 65

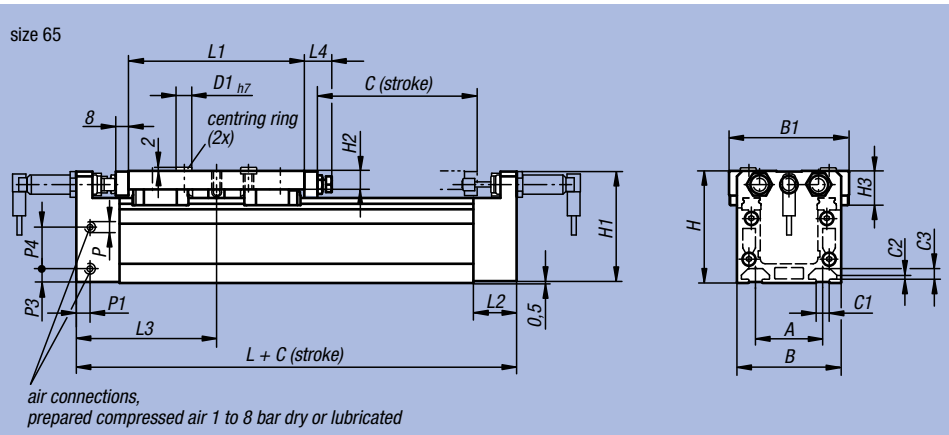

air connections,
prepared compressed air 1 to 8 bar dry or lubricated

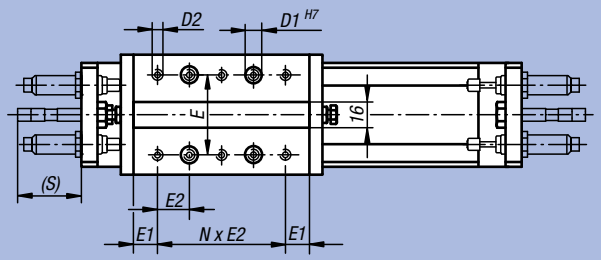

sizes 90/115

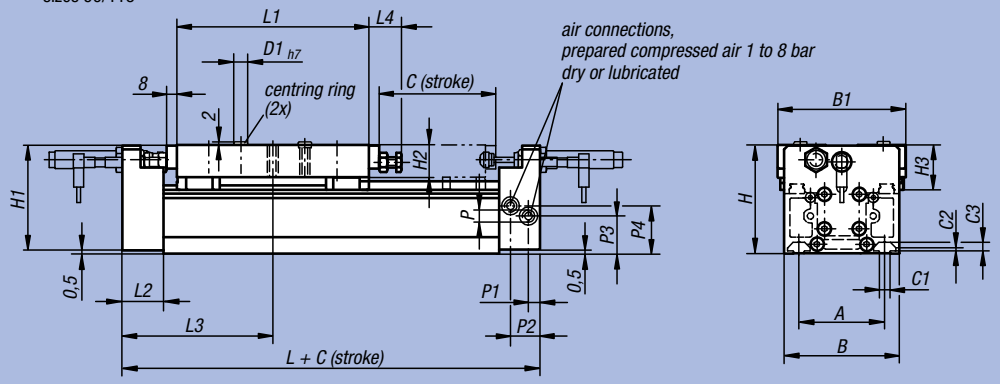

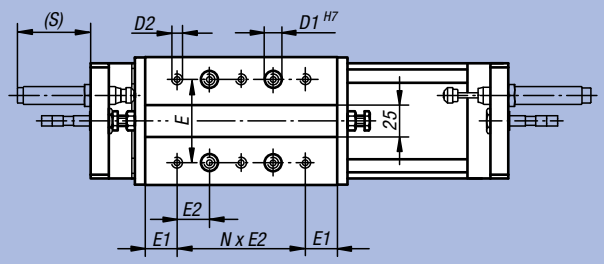

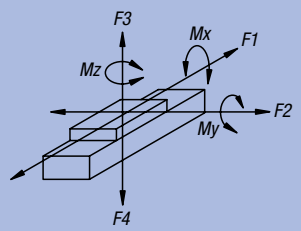

Portal Modules, pneumatic

with aligning guide

Order No.	Size	A	B	B1	C1	C2	C3	C (stroke)	D1	D2	E	E1	E2	H	H1	H2	H3	L
20200-1065X0500	65	42	65	75	8,1	2,5	6,8	500*	10	M5	50	15	20	70	69,5	11,5	21,5	175
20200-1090X0500	90	67	90	100	8,1	2,5	6,8	500*	10	M6	65	25	25	85	84,5	25	35	235
20200-1115X0500	115	97	125	135	10	5	8,5	500*	13	M8	90	20	30	115	114,5	25	44,8	305

Order No.	Size	L1	L2	L3	L4	N (number)	P	P1	P2	P3	P4	S	▫ kg at 0 stroke	▫ kg/ 100 stroke
20200-1065X0500	65	110	27	87,5	17	4	M5	8,5	-	8,5	25,8	40	1,690	0,580
20200-1090X0500	90	150	32	117,5	25,5	4	G1/8	9	23	30	38	64,5	3,420	0,800
20200-1115X0500	115	220	32	152,5	25,5	6	G1/4	15,5	19,5	40,5	60,5	62,5	9,690	1,420

Order No.	Size	Piston force at 6 bar (N)	Cylinder-Ø	Air consumption per 10 mm stroke at 6 bar (ccm)	Mx Nm	My Nm	Mz Nm	F1 (N)	F2 (N)	F3 (N)	F4 (N)
20200-1065X0500	65	150	18	18	155	260	260	460	610	610	610
20200-1090X0500	90	250	25	35	310	410	410	560	750	750	750
20200-1115X0500	115	640	40	88	1570	2270	2270	1550	2070	2070	2070

Order No.	Size	Suitable shock absorber	Suitable proximitiy switch	Suitable plug connector
20200-1065X0500	65	26300-1210010	20910-030	20950-010X2000
20200-1090X0500	90	26300-1415010	20910-030	20950-010X2000
20200-1115X0500	115	26300-2015016	20910-030	20950-010X2000

Portal Modules, pneumatic

with circular channels



Material:
Base body, carriage and flange plate in aluminium alloy; guide shafts in steel

Surface finish:
Base body natural finish;
carriage and flange plate anodized;
guide shafts hardened

Sample order:
nlm 20200-2090X0500

Note:
Portal modules with precision steel shafts and recirculating ball bushes. Drive ensues pneumatically via a rodless pneumatic cylinder. High load rating by use of stiffened cantilever aluminium profile. The modules can be set in any assembly position.
Weight specifications apply in the case of dynamic load.

Repeat accuracy ±0.02 mm.

Temperature range:
+5 °C up to +70 °C.

On request:
* Other lengths
(stroke C max. 5000 mm)
as well as inclined positions.

Accessory:
Shock absorber. Proximitiy switch. Plug connector.

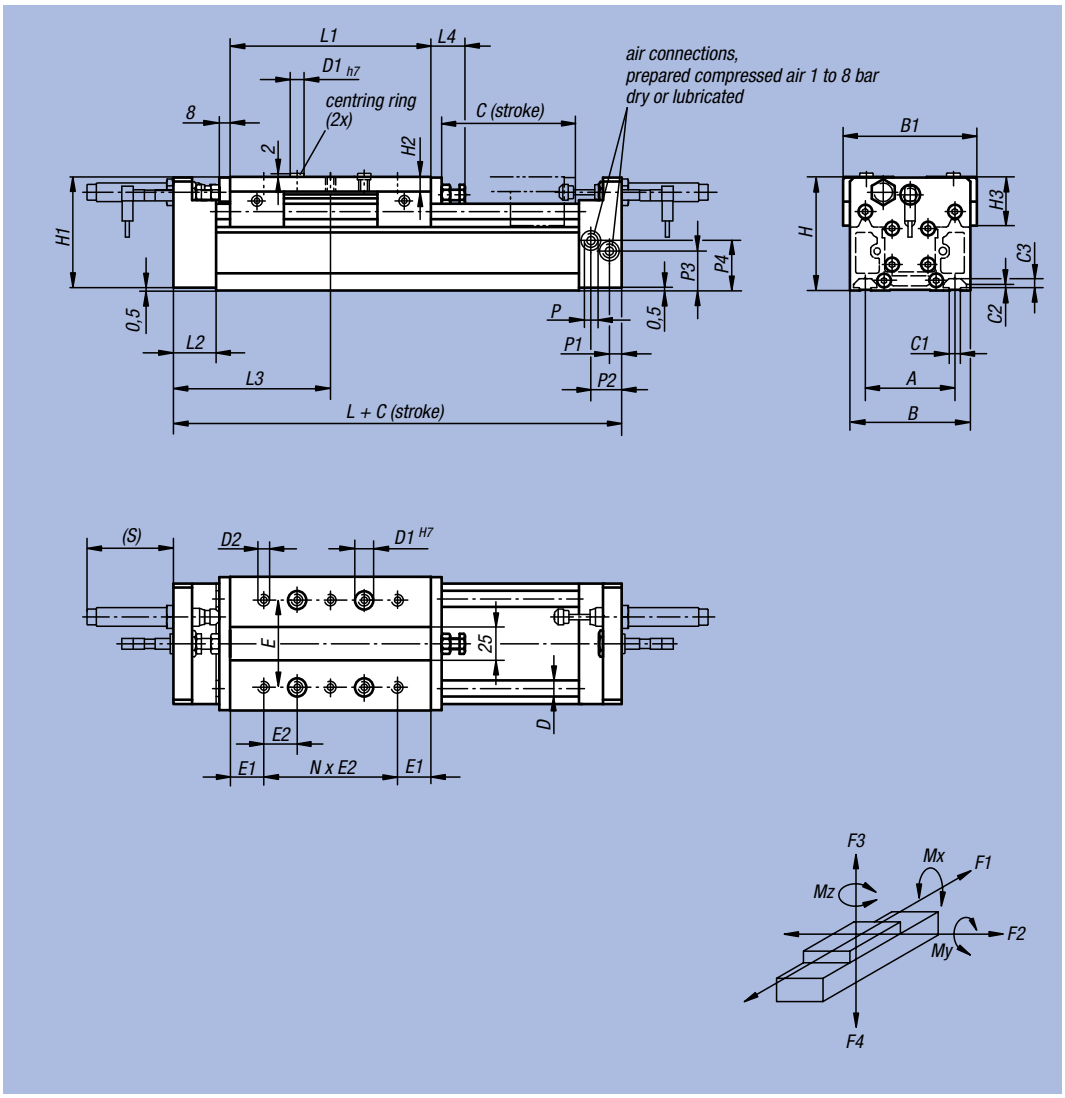

Order No.	Size	A	B	B1	C1	C2	C3	C (stroke)	D	D1	D2	E	E1	E2	H	H1	H2	H3	L
20200-2090X0500	90	67	90	100	8,1	2,5	6,8	500*	12	10	M6	65	25	25	85	84,5	11	36,5	235
20200-2115X0500	115	97	125	135	10	5	8,5	500*	16	13	M8	90	20	30	115	114,5	12,5	46,5	305

Order No.	Size	L1	L2	L3	L4	N (number)	P	P1	P2	P3	P4	S	□ kg at 0 stroke	□ kg/ 100 stroke
20200-2090X0500	90	150	32	117,5	25,5	4	G1/8	9	23	30	38	64,5	3,770	0,810
20200-2115X0500	115	220	32	152,5	25,5	6	G1/4	15,5	19,5	40,5	60,5	62,5	8,750	1,410

Order No.	Size	Piston force at 6 bar (N)	Cylinder-Ø	Air consumption per 10 mm stroke at 6 bar (ccm)	Mx Nm	My Nm	Mz Nm	F1 (N)	F2 (N)	F3 (N)	F4 (N)
20200-2090X0500	90	250	25	35	50	65	160	90	45	120	290
20200-2115X0500	115	640	40	88	70	130	310	180	90	145	340

Order No.	Size	Suitable shock absorber	Suitable proximitiy switch	Suitable plug connector
20200-2090X0500	90	26300-1415010	20910-030	20950-010X2000
20200-2115X0500	115	26300-2015016	20910-030	20950-010X2000

Centring Rings



Material, surface finish:
Steel, black oxide finish

Sample order:
nlm 20240-0705

Note:
The centring rings which serve to connect modules precisely or the indirect mounting of modules are installed by means of adapter plates. The internal thread serves to remove the centring rings.

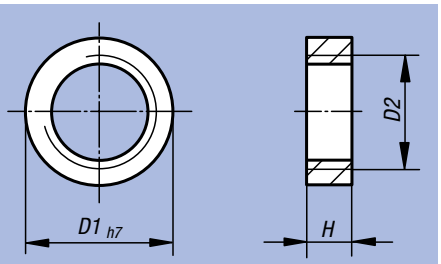

Order No.	D1	D2	H	kg
20240-0705	7	M5	3	0,001
20240-1008	10	M8	4	0,002
20240-1310	13	M10	4	0,002

Notes:

Inductive Proximity Switches

Housing shape, round



Material:
Housing in stainless steel;
active surface in POM or PBT

Surface finish:
Voltage: U = 10 – 30 V DC
Function: Normally open
Connection type: PNP
Mounting type: flush
Security type: IP 67

Sample order:
nlm 20900-010X2000

Note:
Non-contact, wear-free mode of operation, as well as high switching frequency and switching accuracy. Non-sensitive to vibrations, dust and moisture. Inductive sensors record all metals without contact.

Short-circuit proof and reverse-polarity protected.

Safety:
This product is not suited as a sensor for the protection of persons.

Temperature range:
-25 °C up to +70 °C.

Connection diagram:

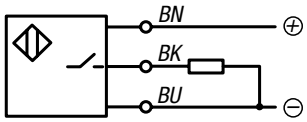

BN = brown
BK = black
BU = blue

Form A

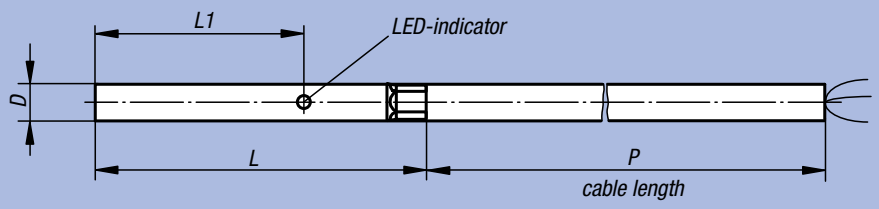

Form B

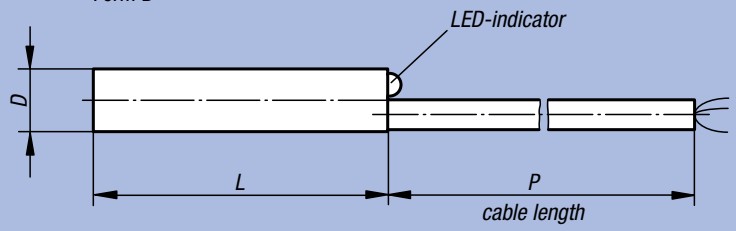

Form C

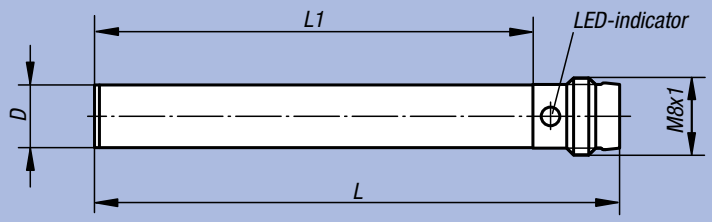

Order No.	Form	D	L	L1	P	Material active surface	Switching distance Sn (mm)	Electricity I max. (mA)	Switching frequency f (Hz)	Connection type	Number of conductors x conductor cross-section
20900-010X2000	A	3	27	16,7	2000	POM	1	100	2000	PUR-cable	3 x 0,09 mm²
20900-020X5000	A	4	27	15,4	5000	POM	1,5	100	3000	PUR-cable	3 x 0,14 mm²
20900-030X3000	B	6,5	30	-	3000	PBT	1,5	200	3000	PVC-cable	3 x 0,14 mm²
20900-040	C	6,5	55	43	-	PBT	1,5	200	3000	plug connector	3
20900-050	C	6,5	60	48	-	PBT	1,5	200	5000	plug connector	3

Inductive Proximity Switches

Housing shape, rectangular



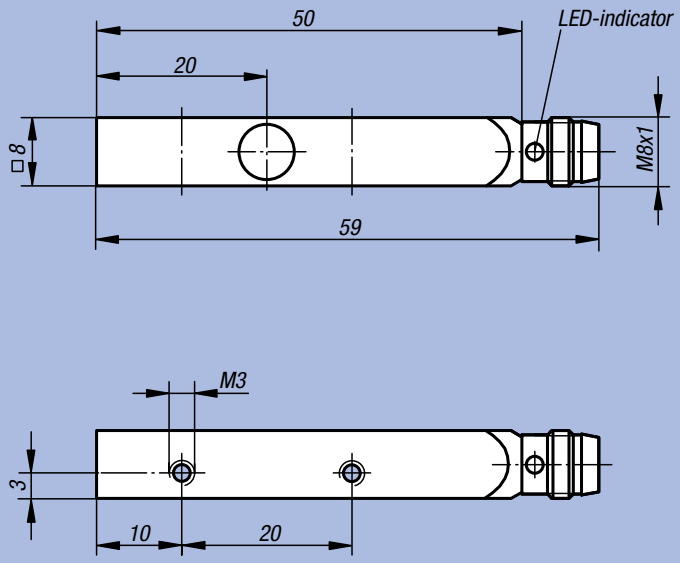

Material:
Housing in die cast zinc alloy;
active surface in POM

Surface finish:
Voltage: U = 10 – 30 V DC
Function: Normally open
Connection type: PNP
Mounting type: flush
Security type: IP 67

Sample order:
nlm 20905-010

Note:
Non-contact, wear-free mode of operation, as well as high switching frequency and switching accuracy. Non-sensitive to vibrations, dust and moisture. Inductive sensors record all metals without contact.

Short-circuit proof and reverse-polarity protected.

Safety:
This product is not suited as a sensor for the protection of persons.

Temperature range:
-25 °C up to +70 °C.

Connection diagram:

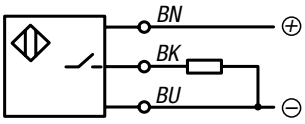

BN = brown
BK = black
BU = blue

Order No.	Switching distance Sn (mm)	Electricity I max. (mA)	Switching frequency f (Hz)	Connection type	Number of conductors x conductor cross-section
20905-010	1,5	200	5000	plug connector	3

Inductive Proximity Switches

Housing shape with thread



Material:
Housing in stainless steel or brass nickel-plated;
active surface in PBT or PA 12

Surface finish:
Voltage: U = 10 – 30 V DC
Function: Normally open
Connection type: PNP
Mounting type: flush
Security type: IP 67

Sample order:
nlm 20910-010X5000

Note:
Non-contact, wear-free mode of operation, as well as high switching frequency and switching accuracy. Non-sensitive to vibrations, dust and moisture. Inductive sensors record all metals without contact.

Short-circuit proof and reverse-polarity protected.

Safety:
This product is not suited as a sensor for the protection of persons.

Temperature range:
-25 °C up to +70 °C.

Connection diagram:

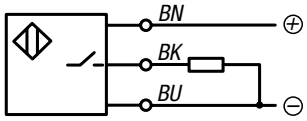

BN = brown
BK = black
BU = blue

Form A

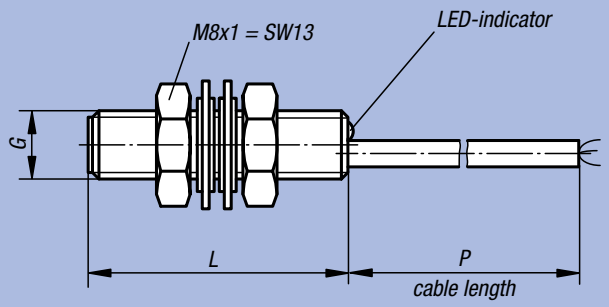

Form B

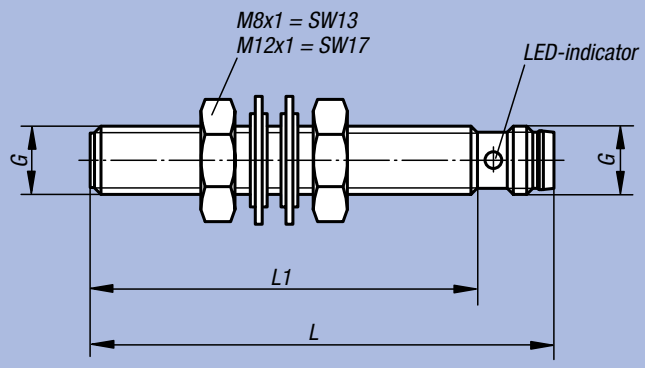

Order No.	Material	Form	G	L	L1	P	Material active surface	Switching distance Sn (mm)	Electricity I max. (mA)	Switching frequency f (Hz)	Connection type	Number of conductors x conductor cross-section
20910-010X5000	stainless steel	A	M8x1	30	-	5000	PBT	1,5	200	3000	PUR-cabel	3 x 0,14 mm²
20910-020	stainless steel	B	M8x1	45	34,5	-	PBT	2	200	1500	plug connector	3
20910-030	stainless steel	B	M8x1	55	44,5	-	PBT	2	200	1500	plug connector	3
20910-040	brass	B	M8x1	59	50	-	PA 12	1,5	100	1000	plug connector	3
20910-050	brass	B	M8x1	59	50	-	PA 12	2	200	700	plug connector	3
20910-060	brass	B	M12x1	65	50	-	PA 12	2	200	1200	plug connector	3
20910-070	brass	B	M12x1	65	50	-	PA 12	4	200	500	plug connector	3

Plug Connector

with screw fitting



Material:
Cable and housing PUR
Contacts, gold-plated bronze.

Surface finish:
Bush (female)
Voltage: U max. 60 V
Current: I max. 4 A
Number of terminals: 3-pin
Security type: IP 67

Sample order:
nlm 20950-010X2000

Note:
Plug connector with screw locking.
Plug connector coated at the cable.

Temperature range:
-25 °C up to +70 °C.

Connection diagram of sleeve:

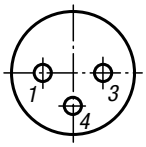

1 = brown (BN)
3 = blue (BU)
4 = black (BK)

Form A

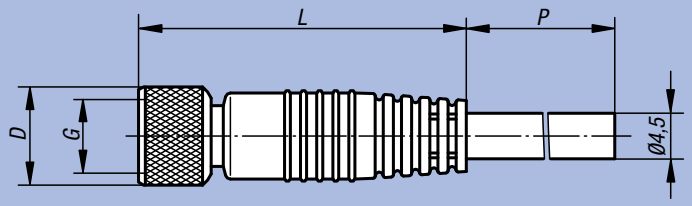

Form B

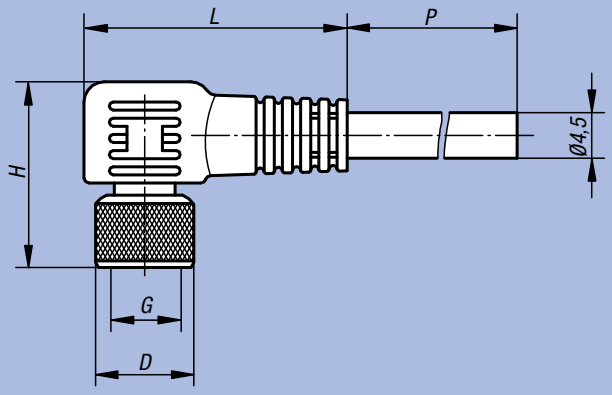

Order No.	Form	D	G	H	L	P	Number of conductors x conductor cross-section
20950-010X2000	A	9,7	M8x1	-	32	2000	3 x 0,25 mm²
20950-020X2000	A	14,5	M12x1	-	41,5	2000	3 x 0,34 mm²
20950-030X2000	B	9,7	M8x1	18,2	26	2000	3 x 0,25 mm²
20950-040X2000	B	14,5	M12x1	26,5	38,5	2000	3 x 0,34 mm²

Plug Connector

convertible with screw fitting



Material:
Housing, plastic
Contacts, gold-plated bronze at M8x1.
Contacts brass Optaloy coated at M12x1.

Surface finish:
Bush (female)
Voltage: U max. 60 V
Current: I max. 4 A
Number of terminals: 3-pin
(4-pin at M12x1)
Security type: IP 67

Sample order:
nlm 20955-010

Note:
Convertible plug connector with screw locking.

Temperature range:
-25 °C up to +85 °C.

Connection diagram of sleeve:

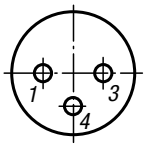

1 = brown (BN)
3 = blue (BU)
4 = black (BK)

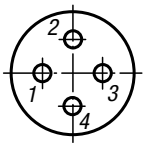

1 = brown (BN)
2 = white (WH)
3 = blue (BU)
4 = black (BK)

Form A

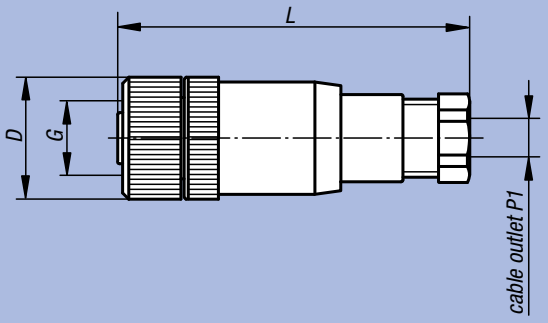

Form B

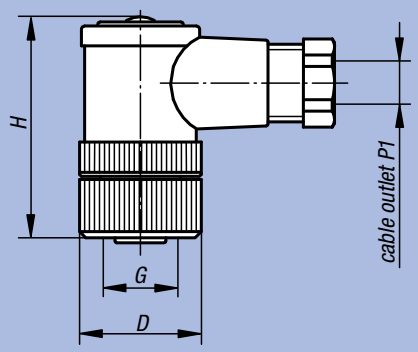

Order No.	Form	D	G	H	L	P1	Connection type	Connection cross-section max. (mm²)
20955-010	A	12	M8x1	-	45	3,5 - 5	screw fitting	0,5
20955-020	A	20	M12x1	-	54	4 - 6	screw fitting	0,75
20955-030	B	12	M8x1	28	-	3,5 - 5	soldered connection	0,25
20955-040	B	20	M12x1	38	-	4 - 6	screw fitting	0,75

21000

Slides
Guide Rails
Positioning Tables
Linear Guide Systems
Position Indicators



Dovetail Slides

with spindel and knurled micrometer knob



Material, surface finish:
Aluminium EN AW-6063.

Sample order:
nlm 21000-050105

Note:
These accurate slides are used, among other things, in the construction of machines, devices and measuring equipment, as well as in the optical and precision mechanics industry.
The stated permissible load value (F) is designed for static load.
The torque values only apply if the dovetail slides are centred.

M1 = counterbore for screw.

Benefits:
- Innovative and safe clamping system that has no height or lateral displacement.
- Guides have no play.
- Quick and retrofit combination in the X, Y and Z axes.

Use:
- Adjustment of machining units, measuring cameras, mirors, microscopes and laser heads (including the machining of surgical needles).
- Fine adjustment of brazing, plasma and welding heads.
- Focussing of flame nozzles.

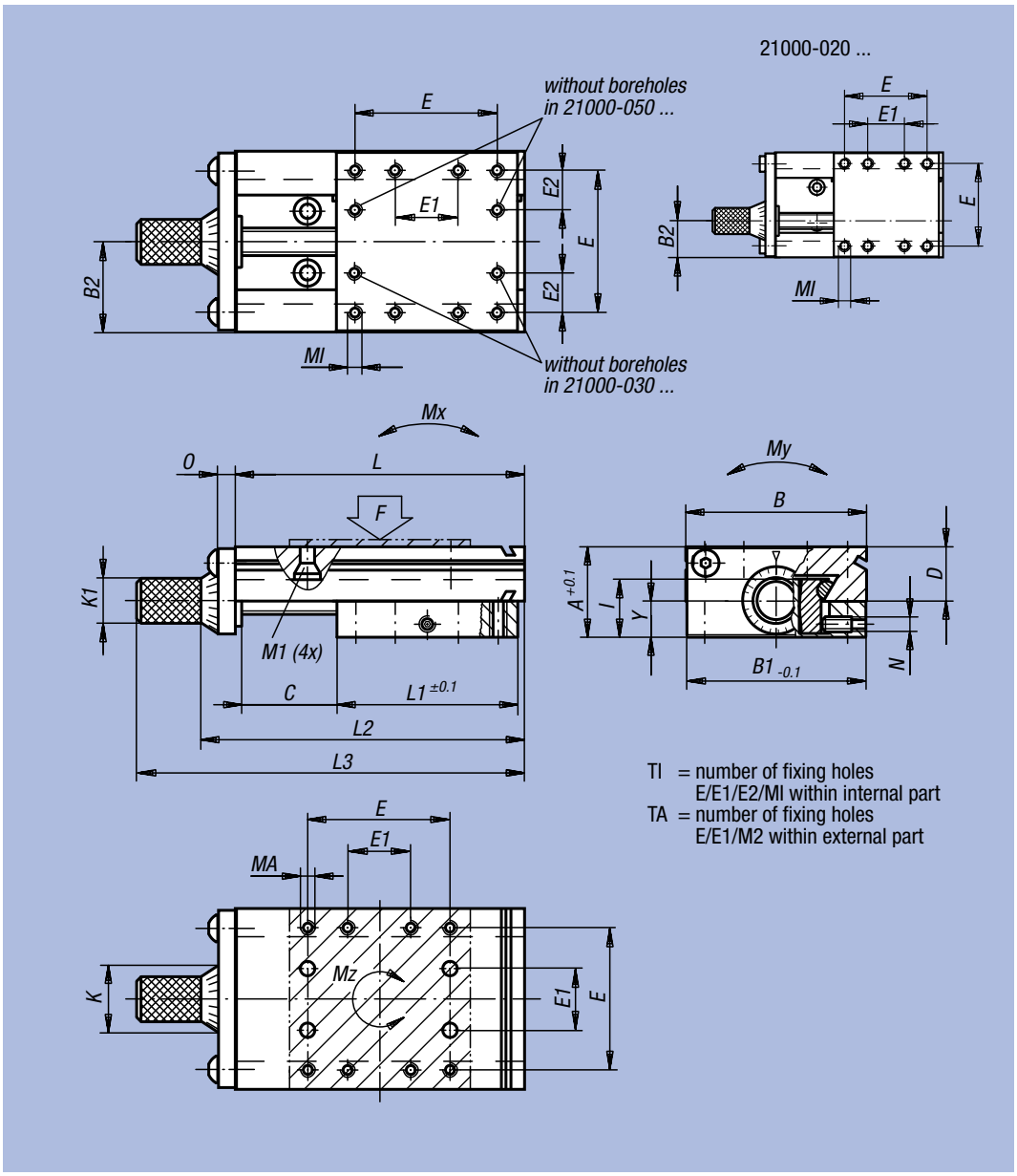

Order No.	A	B	B1	B2	C stroke	D	E	E1	E2	TI	TA	I	K	K1	L	L1	L2	L3	Ml	MA	M1	N	O	Y	Spindle	F (N)	Mx Nm	My Nm	Mz Nm	□ kg
21000-020030	13	20 -0,3	19,5	8,1	5	8	12	6	-	8	8	8,3	10	6,3	30	20	38,2	48,2	M2x3	M2x3	M2	M3	3	5,2	M5x0,5	180	0,45	2	0,3	0,026
21000-020035	13	20 -0,3	19,5	8,1	10	8	12	6	-	8	8	8,3	10	6,3	35	20	43,2	53,2	M2x3	M2x3	M2	M3	3	5,2	M5x0,5	180	0,45	2	0,3	0,028
21000-020045	13	20 -0,3	19,5	8,1	20	8	12	6	-	8	8	8,3	10	6,3	45	20	53,2	63,2	M2x3	M2x3	M2	M3	3	5,2	M5x0,5	180	0,45	2	0,3	0,033
21000-030040	15	30 -0,3	29,5	13	5	9,8	23	8	7,5	10	8	9,8	10	6,3	40	30	48,2	58,2	M3x4,5	M3x4,5	M3	M4	3	5,8	M5x0,5	350	1,1	4	1	0,052
21000-030045	15	30 -0,3	29,5	13	10	9,8	23	8	7,5	10	8	9,8	10	6,3	45	30	53,2	63,2	M3x4,5	M3x4,5	M3	M4	3	5,8	M5x0,5	350	1,1	4	1	0,055
21000-030055	15	30 -0,3	29,5	13	20	9,8	23	8	7,5	10	8	9,8	10	6,3	55	30	63,2	73,2	M3x4,5	M3x4,5	M3	M4	3	5,8	M5x0,5	350	1,1	4	1	0,063
21000-050067	23	50 -0,3	49,5	25	12	14,5	38	16	11	10	8	15,6	22	14,3	67	50	78,2	98,2	M4x6	M4x8	M4	M4	5	11,5	M5x0,5	540	2,5	8	2,3	0,223
21000-050080	23	50 -0,3	49,5	25	25	14,5	38	16	11	10	8	15,6	22	14,3	80	50	91,2	111,2	M4x6	M4x8	M4	M4	5	11,5	M5x0,5	540	2,5	8	2,3	0,242
21000-050105	23	50 -0,3	49,5	25	50	14,5	38	16	11	10	8	15,6	22	14,3	105	50	116,2	136,2	M4x6	M4x8	M4	M4	5	11,5	M5x0,5	540	2,5	8	2,3	0,279
21000-080110	34	80 -0,5	79,5	40	25	23	60	34	13	12	8	22,5	26	14,3	110	80	128,3	148,3	M5x7,5	M5x10	M5	M6	8	14	M10x1	750	8	22	7	0,805
21000-080135	34	80 -0,5	79,5	40	50	23	60	34	13	12	8	22,5	26	14,3	135	80	153,3	173,3	M5x7,5	M5x10	M5	M6	8	14	M10x1	750	8	22	7	0,906
21000-080160	34	80 -0,5	79,5	40	75	23	60	34	13	12	8	22,5	26	14,3	160	80	178,3	198,3	M5x7,5	M5x10	M5	M6	8	14	M10x1	750	8	22	7	1,007
21000-080185	34	80 -0,5	79,5	40	100	23	60	34	13	12	8	22,5	26	14,3	185	80	203,3	223,3	M5x7,5	M5x10	M5	M6	8	14	M10x1	750	8	22	7	1,108
21000-120150	45	120 -0,5	119	60	25	30	90	40	25	12	8	29	26	14,3	150	120	172,3	192,3	M5x10	M5x10	M5	M6	12	18,5	M10x1	1500	30	45	18	2,146
21000-120175	45	120 -0,5	119	60	50	30	90	40	25	12	8	29	26	14,3	175	120	197,3	217,3	M5x10	M5x10	M5	M6	12	18,5	M10x1	1500	30	45	18	2,331
21000-120200	45	120 -0,5	119	60	75	30	90	40	25	12	8	29	26	14,3	200	120	222,3	242,3	M5x10	M5x10	M5	M6	12	18,5	M10x1	1500	30	45	18	2,516
21000-120225	45	120 -0,5	119	60	100	30	90	40	25	12	8	29	26	14,3	225	120	247,3	267,3	M5x10	M5x10	M5	M6	12	18,5	M10x1	1500	30	45	18	2,701

Straps



Material, surface finish:
Aluminium EN AW-6063.

Sample order:
nlm 21000-020
(1 Strap with clamping screw)

Note:
The straps are used to clamp the dovetail slides in the X, Y and Z axes and to fix the slide unit in the machine. The lifting operation will be reduced if the strap is used on the surface.

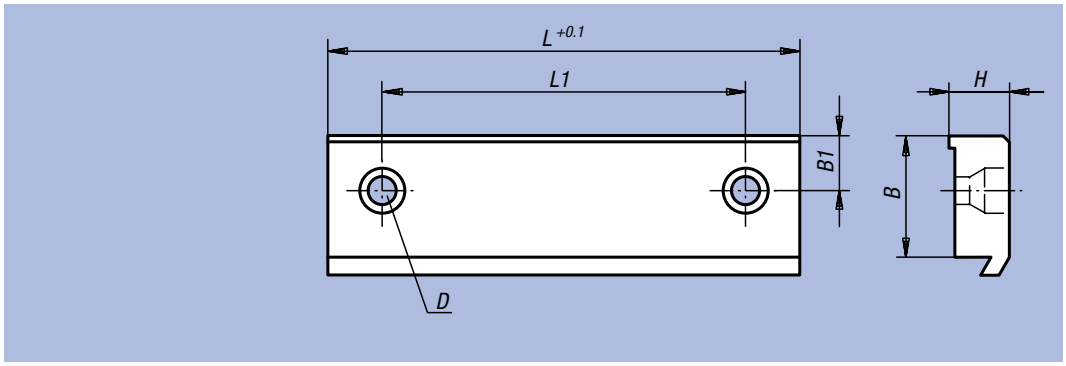



Order No.	B	B1	D for screw	H	L	L1	Stroke reduction	suitable for sliding table
21000-020	5,7	3,7	M2	3,5	19,5	12	3,5	21000-020 ...
21000-030	5,7	2,85	M3	3,5	29,5	23	3,5	21000-030 ...
21000-050	11,5	5,25	M4	8	49,3	38	8	21000-050 ...
21000-080	11,5	6	M5	8	78,9	60	8	21000-080 ...
21000-120	15	10	M5	10	118,4	90	10	21000-120 ...

Application: dovatail slide

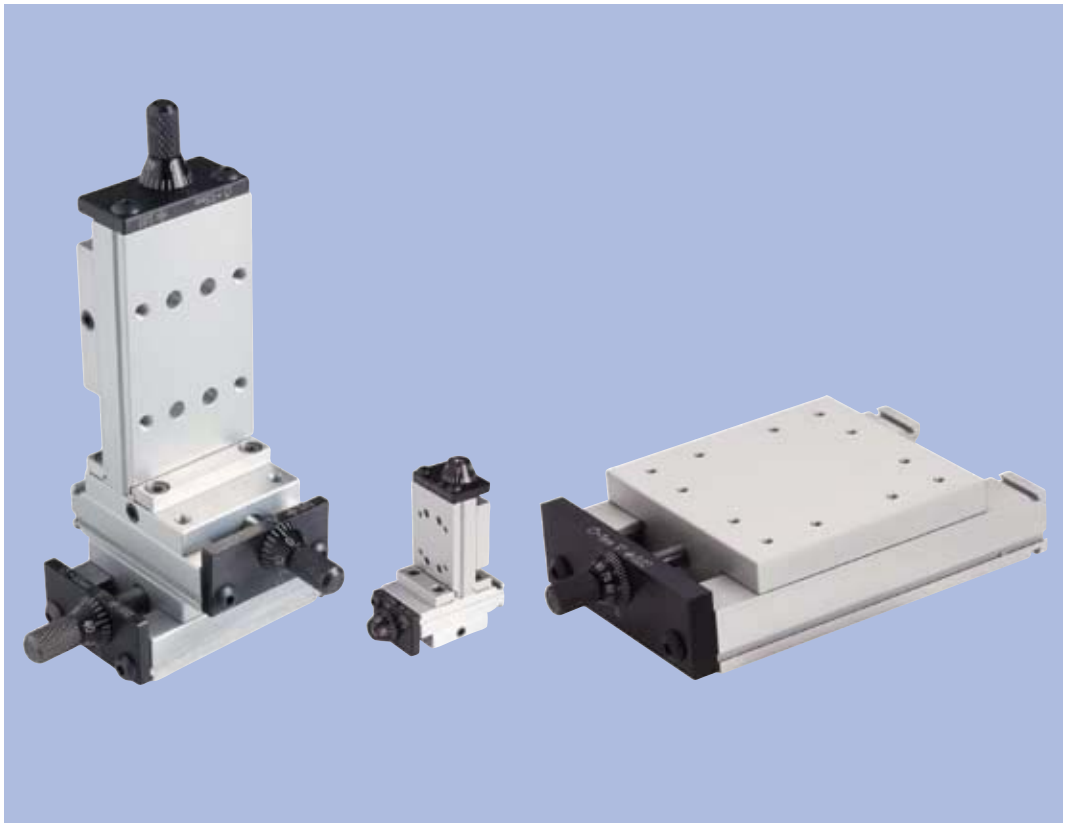

Dovetail Slides



Material:
GJL 250.

Surface finish:
Natural finish, ground

Sample order:
nlm 21030-050105

Note:
These high-precision Dovetail Slides are particulary used to build machines and mechanical systems, metrology devices for the optical industry and in precision mechanical engineering. The central adjustment screw „N“ can also be replaced by a Clamp Lever part no. 06460.
The stated permissible load values (F) are designed for dynamic stress with a lifespan of 1 million lifting operations. For static stress the permissible load is equal to 10 times the value F.
The torque values apply only if the dovetail slides are centred.

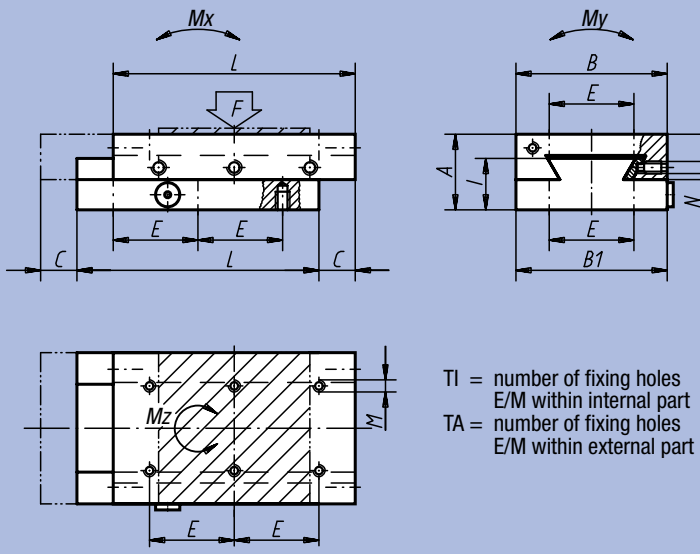

TI = number of fixing holes E/M within internal part
TA = number of fixing holes E/M within external part

Order No.	A	B	B1	C	D	E	TI	TA	I	L	M	N	F (N)	Mx Nm	My Nm	Mz Nm	kg
21030-050080	25	50	49,5	15	15	28	6	6	17,6	80	M4	M5	72	4	6	5	0,710
21030-050105	25	50	49,5	20	15	28	8	8	17,6	105	M4	M5	95	7	7	8	0,930
21030-050130	25	50	49,5	25	15	28	10	10	17,6	130	M4	M5	117	10	9	12	1,150
21030-075105	32	75	74,5	20	19,5	62	4	4	22,5	105	M5	M5	128	9	15	10	1,770
21030-075130	32	75	74,5	25	19,5	62	4	4	22,5	130	M5	M5	159	14	18	15	2,190
21030-100110	40	100	99,5	20	24	86	4	4	27,5	110	M6	M6	156	11	26	12	3,120
21030-100135	40	100	99,5	25	24	86	4	4	27,5	135	M6	M6	192	17	32	19	3,820
21030-100160	40	100	99,5	30	24	86	4	4	27,5	160	M6	M6	227	24	37	26	4,530

Dovetail Slides

with end plates

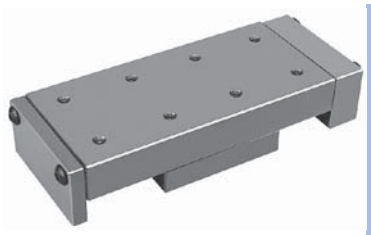

Material:
GJL 250.

Surface finish:
Natural finish, ground

Sample order:
nlm 21031-100135

Note:
The central adjustment screw „N“ can also be replaced by a Clamp Lever part no. 06460.
The stated permissible load values (F) are designed for dynamic stress with a lifespan of 1 million lifting operations. For static stress the permissible load is equal to 10 times the value F.
The torque values apply only if the dovetail slides are centred.

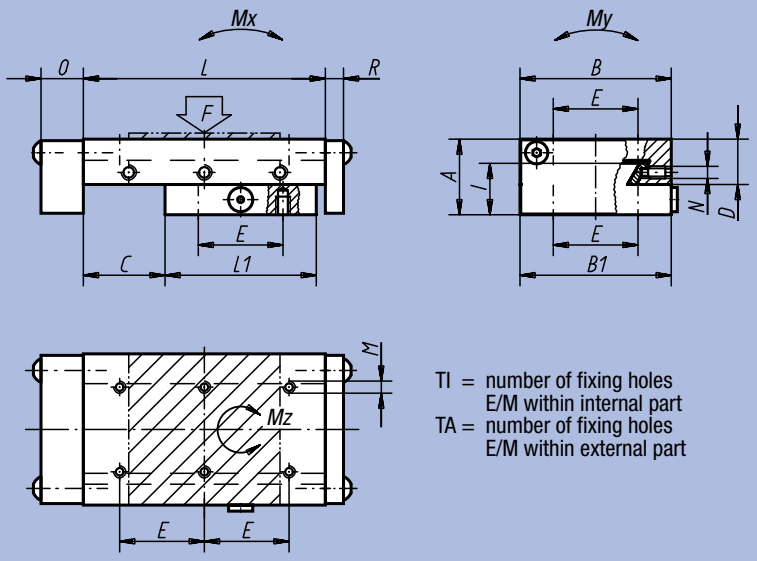

TI = number of fixing holes E/M within internal part
TA = number of fixing holes E/M within external part

Order No.	A	B	B1	C	D	E	TI	TA	I	L	L1	M	N	O	R	F (N)	Mx Nm	My Nm	Mz Nm	kg
21031-050080	25	50	49,5	25	15	28	4	6	17,6	80	50	M4	M5	14	6	109	2	6	2	0,720
21031-050105	25	50	49,5	50	15	28	4	8	17,6	105	50	M4	M5	14	6	61	2	6	2	0,830
21031-075105	32	75	74,5	25	19,5	62	4	4	22,5	105	75	M5	M5	15	6	290	5	19	6	1,910
21031-075130	32	75	74,5	50	19,5	62	4	4	22,5	130	75	M5	M5	15	6	168	5	19	6	2,130
21031-100135	40	100	99,5	25	24	86	4	4	27,5	135	100	M6	M6	15	6	586	11	43	12	4,040
21031-100160	40	100	99,5	50	24	86	4	4	27,5	160	100	M6	M6	15	6	351	11	43	12	4,380
21031-100260	40	100	99,5	100	24	86	4	6	27,5	260	150	M6	M6	15	6	395	23	63	26	6,460

Dovetail Slides

with spindel and knurled micrometer knob



Material:
GJL 250.

Surface finish:
Natural finish, ground

Sample order:
nlm 21032-075130

Note:
The central adjustment screw „N“ can also be replaced by a Clamp Lever part no. 06460. The micrometer screw is graduated in 0.02 mm increments. Other graduations are available on request.
The stated permissible load values (F) are designed for dynamic stress with a lifespan of 1 million lifting operations. For static stress the permissible load is equal to 10 times the value F.
The torque values apply only if the dovetail sildes are centred.

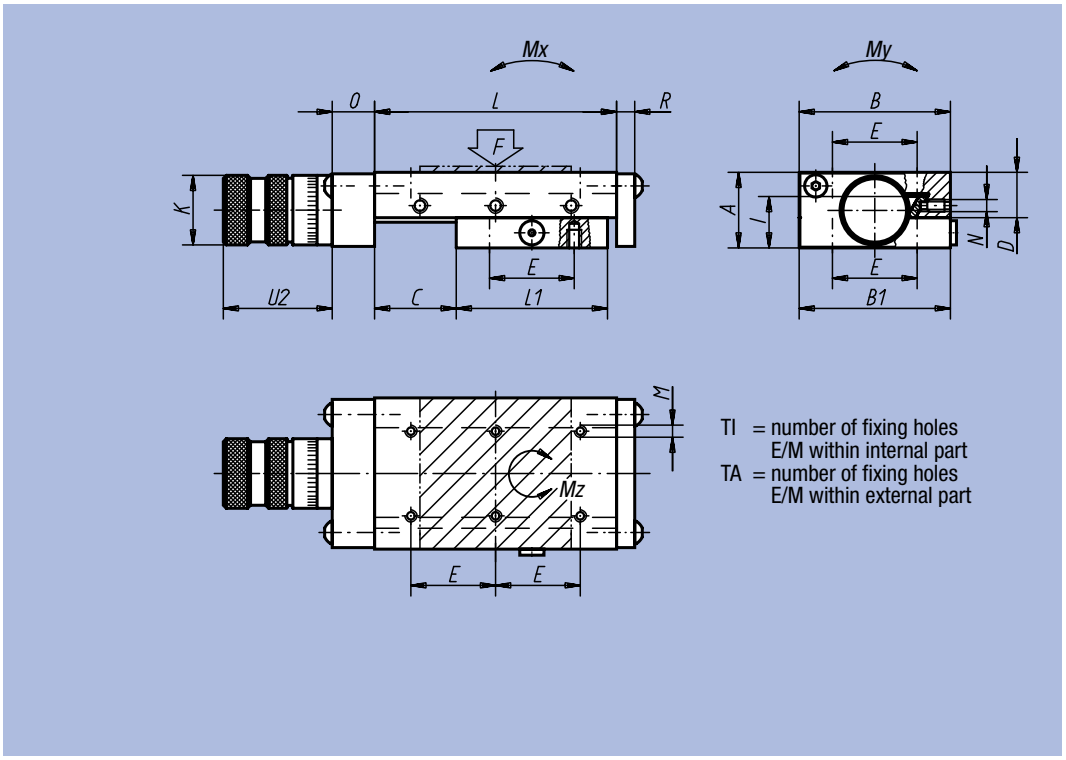

Order No.	A	B	B1	C	D	E	TI	TA	I	K	L	L1	M	N	O	R	U2	Spindle	F (N)	Mx Nm	My Nm	Mz Nm	kg
21032-050080	25	50	49,5	25	15	28	4	6	17,6	23	80	50	M4	M5	19	6	31	M6x1	109	2	6	2	0,720
21032-050105	25	50	49,5	50	15	28	4	8	17,6	23	105	50	M4	M5	19	6	31	M6x1	61	4	9	4	0,830
21032-050205	25	50	49,5	100	15	28	8	16	17,6	23	205	100	M4	M5	19	6	31	M6x1	114	7	12	8	1,490
21032-075105	32	75	74,5	25	19,5	62	4	4	22,5	30	105	75	M5	M5	21	6	38	M10x1	290	5	19	6	1,910
21032-075130	32	75	74,5	50	19,5	62	4	4	22,5	30	130	75	M5	M5	21	6	38	M10x1	168	5	19	6	2,130
21032-075155	32	75	74,5	75	19,5	62	4	4	22,5	30	155	75	M5	M5	21	6	38	M10x1	118	5	19	6	2,340
21032-100135	40	100	99,5	25	24	86	4	4	27,5	30	135	100	M6	M6	21	6	38	M10x1	586	11	43	12	4,040
21032-100160	40	100	99,5	50	24	86	4	4	27,5	30	160	100	M6	M6	21	6	38	M10x1	351	11	43	12	4,380
21032-100260	40	100	99,5	100	24	86	4	6	27,5	30	260	150	M6	M6	21	6	38	M10x1	395	23	63	26	6,460
21032-200310	60	200	199	100	37	170	4	4	41,5	47	310	200	M8	M8	28	8	53	Tr16x2	1078	66	283	71	24,700

Dovetail Slides

with spindel and knurled micrometer knob and handweel



Material:
GJL 250.

Surface finish:
Natural finish, ground

Sample order:
nlm 21033-150310

Note:
The central adjustment screw „N“ can also be replaced by a Clamp Lever part no. 06460. The micrometer screw is graduated in 0.02 mm increments. Other graduations are available on request. The rotary handle of the wheel can be folded.
The stated permissible load values (F) are designed for dynamic stress with a lifespan of 1 million lifting operations. For static stress the permissible load is equal to 10 times the value F.
The torque values apply only if the dovetail slides are centred.

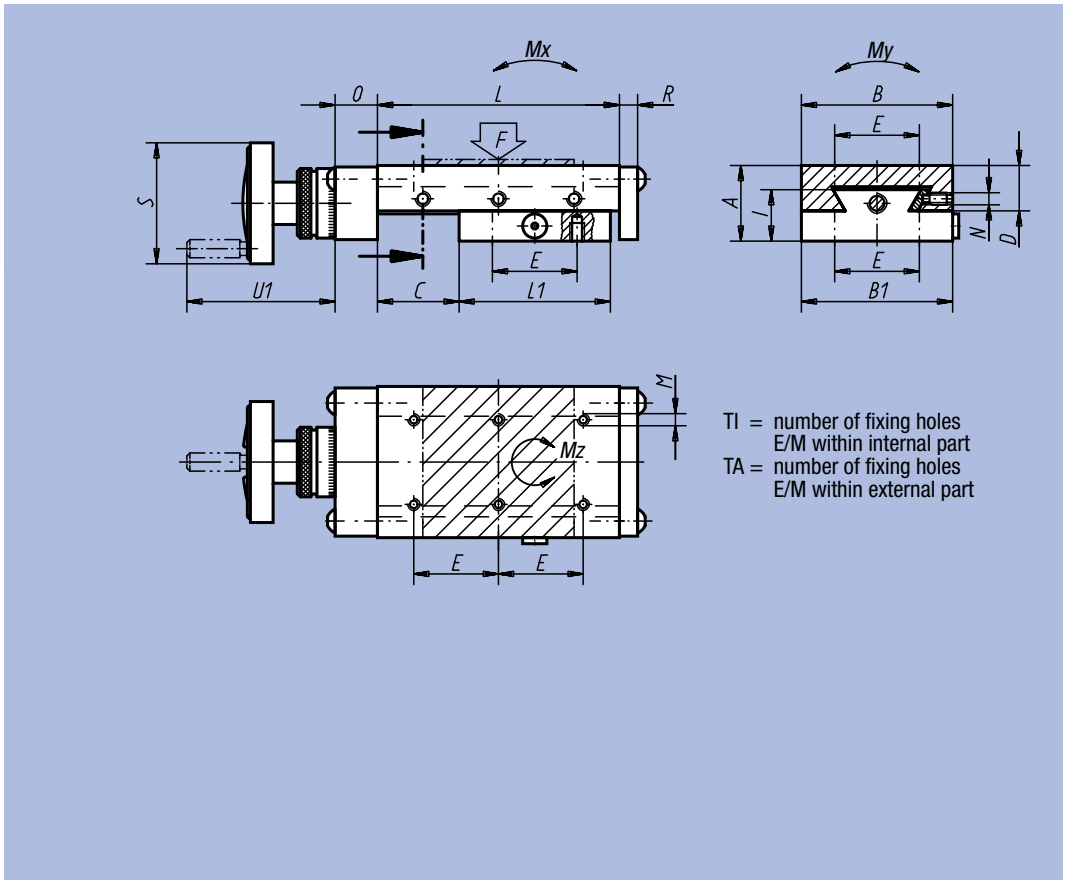

TI = number of fixing holes E/M within internal part
TA = number of fixing holes E/M within external part

Order No.	A	B	B1	C	D	E	TI	TA	I	L	L1	M	N	O	R	S	U1	Spindle	F (N)	Mx Nm	My Nm	Mz Nm	kg
21033-150210	50	150	149	50	29,5	130	4	4	35,5	210	150	M8	M8	28	8	80	100	Tr16x2	917	31	128	33	11,500
21033-150310	50	150	149	100	29,5	130	4	6	35,5	310	200	M8	M8	28	8	80	100	Tr16x2	868	53	169	58	15,300

Precision Roller Sliders

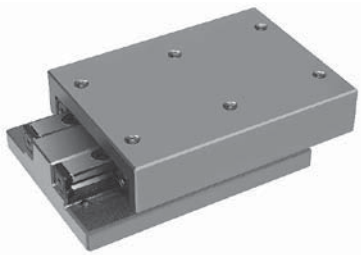

Material:
GJL 250 ground

Sample order:
nlm 21034-050105

Note:
Optional: adherence clamping system on the side edge, with no load on the guiding geometry.
F = permissible load for dynamic and static use.
The stated permissible load values (F) are designed for a lifespan of 1 million lifting operations.
The torque values apply only if the dovetail slides are centred.
On request, also available in crossed table versions.

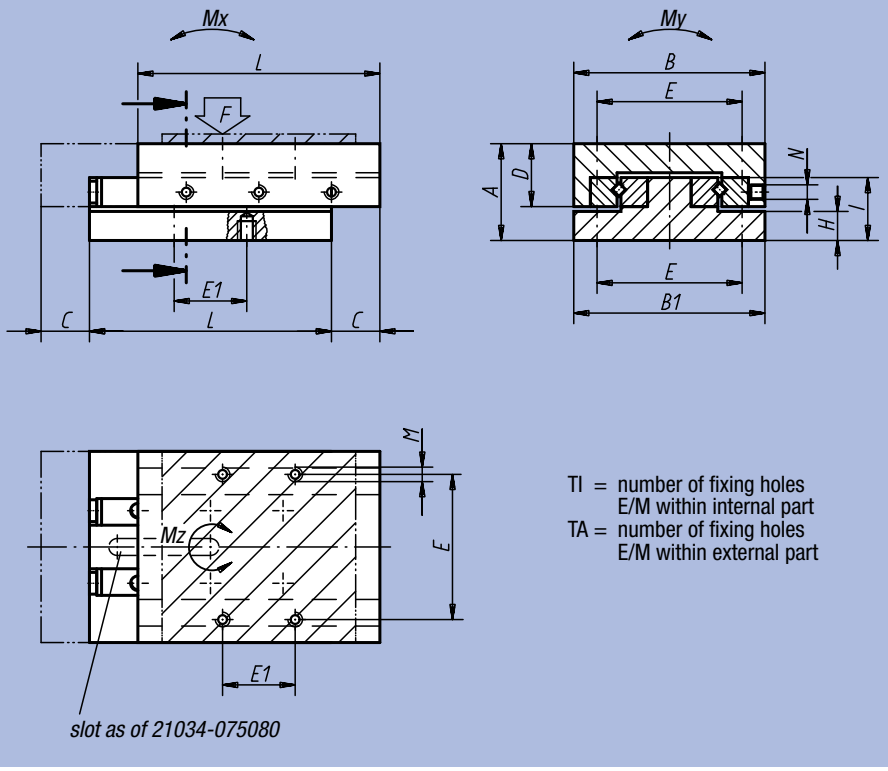

Order No.	Type	A	B	B1	C	D	E	E1	TI	TA	H	I	L	M	N	F (N)	Mx Nm	My Nm	Mz Nm	kg
21034-040050	RON	20	40	39,5	10	13	30	15	4	4	6,5	13	50	M3	M3	206	1	4	3	0,300
21034-0400501	ROL	20	40	39,5	17,5	13	30	15	4	4	6,5	13	50	M3	M3	85	1	3	2	0,300
21034-040065	ROL	20	40	39,5	25	13	30	15	6	6	6,5	13	65	M3	M3	114	1	4	3	0,380
21034-040080	ROL	20	40	39,5	32,5	13	30	15	8	8	6,5	13	80	M3	M3	143	3	5	5	0,470
21034-050055	RON	25	50	49,5	10	17	28	28	4	4	7,5	18	55	M4	M3	283	4	7	6	0,440
21034-050080	ROL	25	50	49,5	30	17	28	28	6	6	7,5	18	80	M4	M3	189	3	9	7	0,640
21034-050105	ROL	25	50	49,5	40	17	28	28	8	8	7,5	18	105	M4	M3	301	10	11	15	0,840
21034-050155	ROL	25	50	49,5	60	17	28	28	12	12	7,5	18	155	M4	M3	476	23	19	33	1,250
21034-060055	RON	25	60	59,5	10	17	34	34	4	4	7,5	18	55	M4	M3	288	4	8	6	0,530
21034-060080	ROL	25	60	59,5	30	17	34	34	6	6	7,5	18	80	M4	M3	192	3	11	7	0,770
21034-060105	ROL	25	60	59,5	40	17	34	34	6	6	7,5	18	105	M4	M4	305	10	14	15	1,020
21034-060155	ROL	25	60	59,5	60	17	34	34	10	10	7,5	18	155	M4	M4	483	23	23	34	1,500
21034-075080	RON	32	75	74,5	15	21	62	62	4	4	10,5	23	80	M5	M5	487	10	18	15	1,230
21034-075105	RON	32	75	74,5	20	21	62	62	4	4	10,5	23	105	M5	M5	690	18	26	27	1,610
21034-075130	RON	32	75	74,5	25	21	62	62	4	4	10,5	23	130	M5	M5	895	29	33	42	2,000
21034-100110	RON	40	100	99,5	15	27,5	86	86	4	4	12	28	110	M6	M6	1284	43	59	63	2,920
21034-100160	ROL	40	100	99,5	52,5	27,5	86	86	4	4	12	28	160	M6	M6	946	37	79	68	4,280
21034-100210	ROL	40	100	99,5	80	27,5	86	86	6	6	12	28	210	M6	M6	1066	60	99	105	5,650
21034-100260	ROL	40	100	99,5	105	27,5	86	86	6	6	12	28	260	M6	M6	1228	89	119	151	7,000

Miniature Roller Sliders



Material:
Outer casing made of black anodized aluminium. Ground steel carriage and bearing support. Internal part hardened.

Sample order:
nlm 21035-030080

Note:
Roller Sliders that are pre-stressed and adjusted with „N“ adjustment screws slide freely and effortlessly.
The fixing holes „K“ can also be used as threaded holes or transit holes.
F = permissible load for dynamic and static use.
The stated permissible load values (F) are designed for a lifespan of 1 million lifting operations.
The torque values apply only if the dovetail slides are centred.

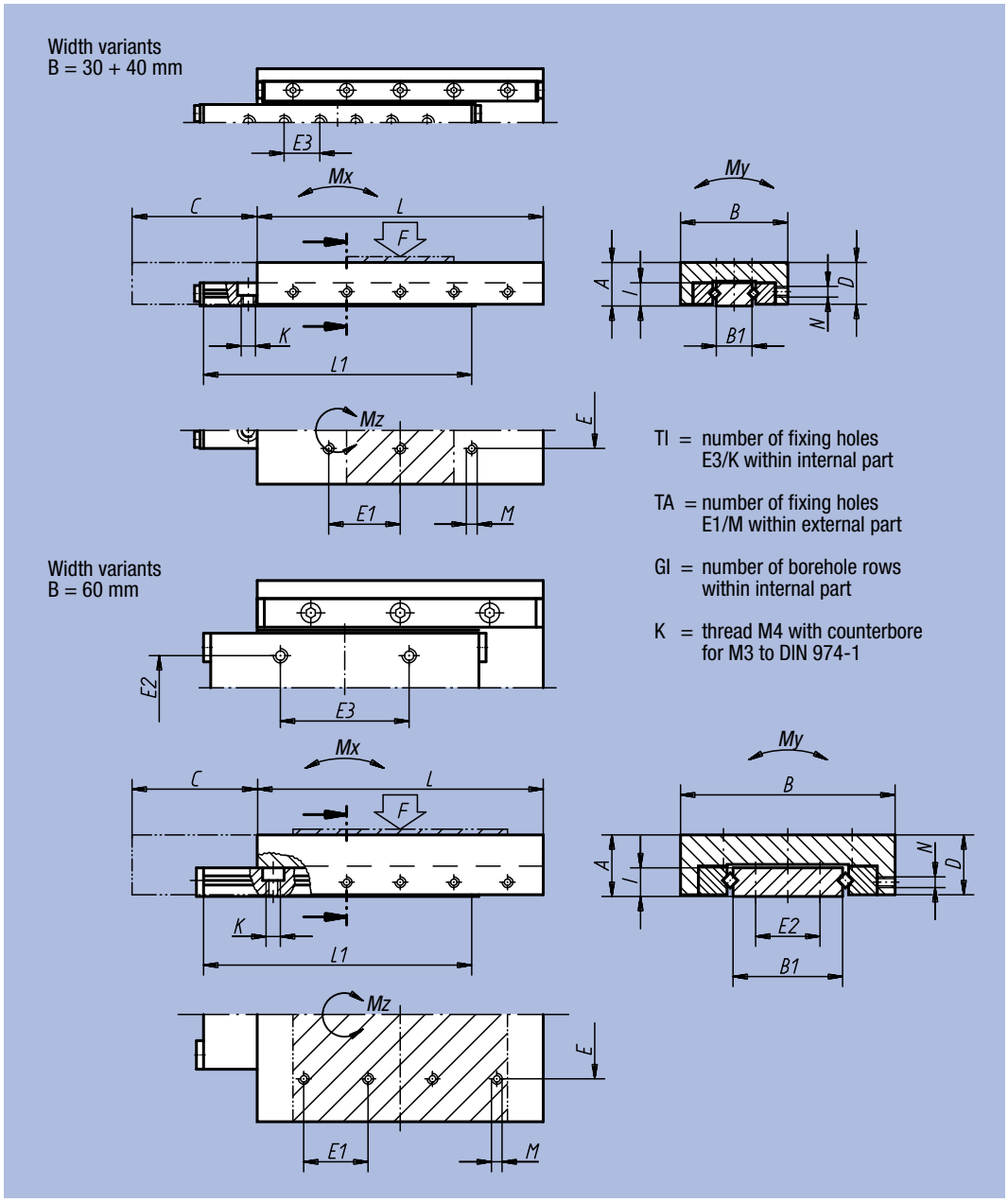

TI = number of fixing holes E3/K within internal part

TA = number of fixing holes E1/M within external part

GI = number of borehole rows within internal part

K = thread M4 with counterbore for M3 to DIN 974-1

Order No.	Type	A	B	B1	C	D	E	E1	E2	E3	TI	TA	GI	I	K	L	L1	M	N	F (N)	Mx Nm	My Nm	Mz Nm	kg
21035-030035	MRON	12	30	10	12	11,7	10	10	-	10	2	6	1	6,3	M4	35	30	M3	M3	168	1	1,9	2	0,060
21035-030050	MRON	12	30	10	18	11,7	10	10	-	10	2	6	1	6,3	M4	50	45	M3	M3	245	3,5	2,6	5,2	0,080
21035-030065	MRON	12	30	10	24	11,7	10	20	-	10	4	6	1	6,3	M4	65	60	M3	M3	361	4,7	3,9	7,9	0,100
21035-0300501	MROL	12	30	10	34	11,7	10	10	-	10	2	6	1	6,3	M4	50	45	M3	M3	131	2,2	1,9	3,3	0,080
21035-0300651	MROL	12	30	10	48	11,7	10	20	-	10	4	6	1	6,3	M4	65	60	M3	M3	161	3,5	2,6	5,2	0,100
21035-030080	MRON	12	30	10	30	11,7	10	20	-	10	6	6	1	6,3	M4	80	75	M3	M3	432	9,1	4,5	13,3	0,130
21035-030095	MRON	12	30	10	40	11,7	10	20	-	10	8	10	1	6,3	M4	95	90	M3	M3	466	11,6	5,1	16,9	0,150
21035-040055	MRON	15	40	14,4	20	14,7	20	20	-	20	2	6	1	8,3	M4	55	50	M3	M3	231	4,6	4,6	6,8	0,140
21035-040080	MRON	15	40	14,4	30	14,7	20	20	-	20	2	6	1	8,3	M4	80	75	M3	M3	487	10,3	7,6	15,3	0,200
21035-040105	MRON	15	40	14,4	40	14,7	20	20	-	20	4	10	1	8,3	M4	105	100	M3	M3	689	18,6	10,6	27,3	0,270
21035-040155	MROL	15	40	14,4	120	14,7	20	20	-	20	6	14	1	8,3	M4	155	150	M3	M3	489	23,7	12,2	34,8	0,410
21035-060055	MRON	17	60	30,6	20	16,7	36	18	18	18	4	4	2	8,3	M4	55	50	M3	M4	294	4,6	7	6,9	0,660
21035-060080	MRON	17	60	30,6	30	16,7	36	18	18	36	4	8	2	8,3	M4	80	75	M3	M4	492	10,4	11,6	15,5	0,800
21035-060105	MRON	17	60	30,6	40	16,7	36	18	18	36	4	12	2	8,3	M4	105	100	M3	M4	697	18,8	16,2	27,6	0,930

Precision Roller Sliders

with end plates



Material:
GJL 250 ground

Sample order:
nlm 21038-040090

Note:
Table available in aluminium on request.
F = permissible load for dynamic and static use.
The stated permissible load values (F) are designed for a lifespan of 1 million lifting operations.
The torque values apply only if the dovetail slides are centred.

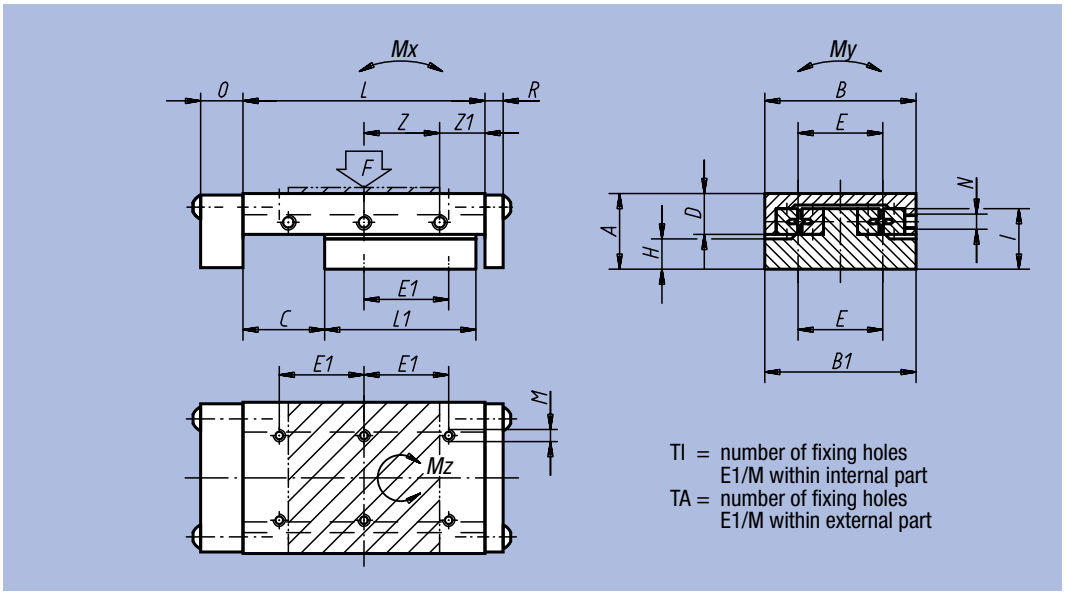

TI = number of fixing holes E1/M within internal part
TA = number of fixing holes E1/M within external part

Order No.	A	B	B1	C	D	E	E1	H	TI	TA	I	L	L1	M	N	O	R	Z	Z1	F (N)	Mx Nm	My Nm	Mz Nm	kg
21038-040090	20	40	39,5	40	13	30	15	6,5	6	8	13	90	45	M3	M3	12	3	15x2	30	77	1	3	2	0,500
21038-050105	25	50	49,5	25	17	28	28	7,5	6	8	18	105	75	M4	M3	14	6	25x2	27,5	623	9	14	15	1,020
21038-060180	25	60	59,5	75	17	34	34	7,5	6	12	18	180	100	M4	M4	14	6	25x3	52,5	349	9	17	16	1,660
21038-100260	40	100	99,5	100	27,5	86	86	12	4	6	28	260	150	M6	M6	15	6	50x2	80	990	37	80	69	6,130

Application: dovatail slide manual cross table

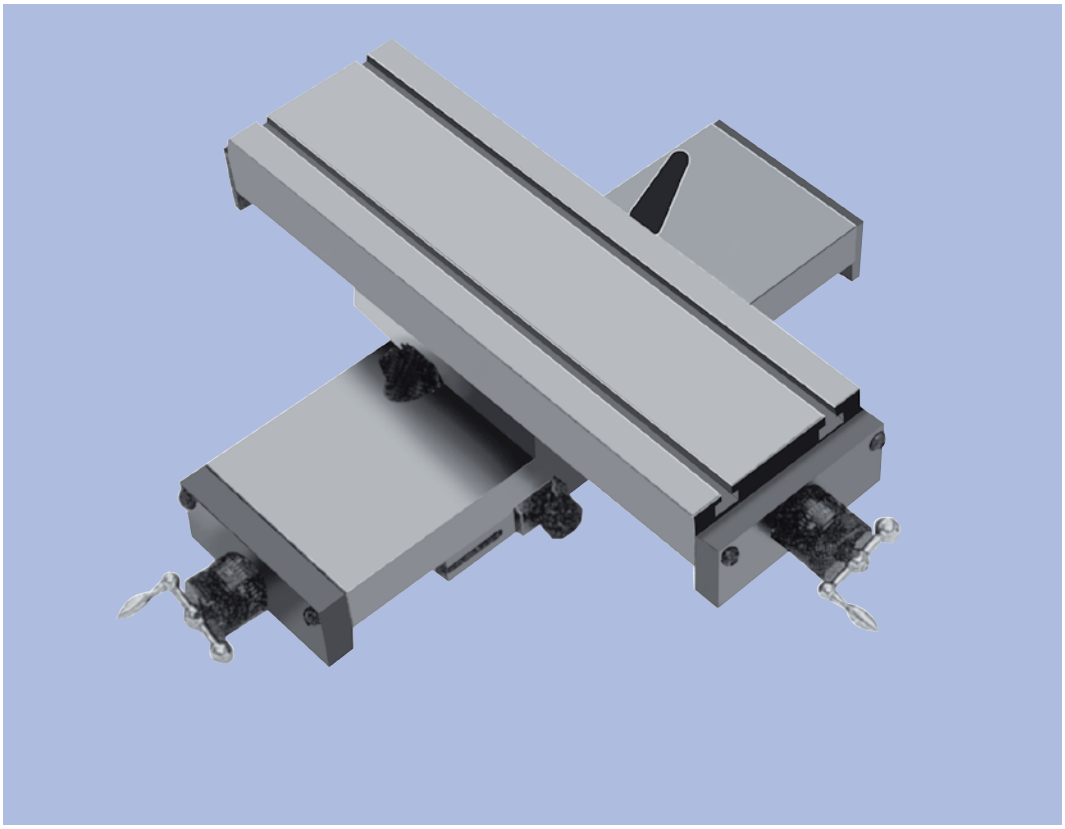

Precision Roller Sliders

with spindel and knurled micrometer knob



Material:
GJL 250

Surface finish:
Natural finish, ground

Sample order:
nlm 21040-040045

Note:
Table available in aluminium on request.
The micrometer screw is graduated in 0.02 mm increments. The model 21040-040045 is graduated in 0.01 mm increments. Other graduations are available on request.
F = permissible load for dynamic and static use.
The stated permissible load values (F) are designed for dynamic stress with a lifespan of 1 million lifting operations.
The torque values apply only if the dovetail slides are centred.

* Spacing of the fixing holes in the outer part = 25 mm.

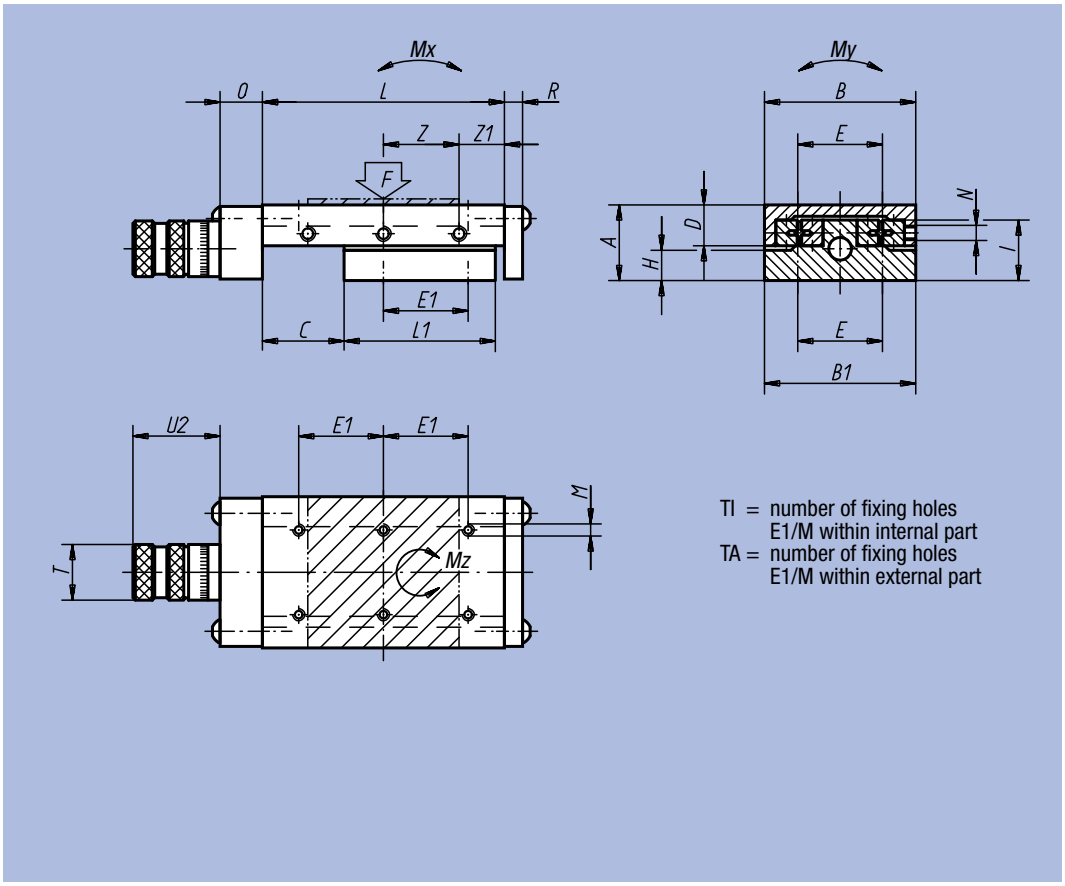

TI = number of fixing holes E1/M within internal part
TA = number of fixing holes E1/M within external part

Order No.	A	B	B1	C	D	E	E1	H	TI	TA	I	L	L1	M	N	O	R	T	U2	Z	Z1	Spindle	F (N)	Mx Nm	My Nm	Mz Nm	kg
21040-040045	20	40	39,5	10	13	30	15*	6,5	4	4	13	45	30	M3	M3	12	3	16	25	15x1	15	M5x0,5	183	1	3	2	0,340
21040-050075	25	50	49,5	20	17	28	28	7,5	4	6	18	75	50	M4	M3	14	6	23	36	25x1	25	M6x1	286	4	7	6	0,840
21040-060075	25	60	59,5	20	17	34	34	7,5	4	4	18	75	50	M4	M4	14	6	23	36	25x1	25	M6x1	289	4	8	6	0,980
21040-100360	40	100	99,5	150	27,5	86	86	12	6	8	28	360	200	M6	M6	15	6	30	44	50x3	105	M10x1	1130	61	100	107	8,040

Cross Roller Guide Rails



Material:
Guide rail in tool steel 1.2842;
end pieces in 1.0531

Surface finish:
Ground hardened steel guide rails (60–62 HRC);
end piece black oxide finish

Sample order:
nlm 21050-02030
(1 guide rail, without roller cages)

Note:
See 21052 for the appropriate roller cage.
The guide rails are built into the dovetail slides (21034, 21035, 21038 and 21040). They can therefore also be used as spare parts.

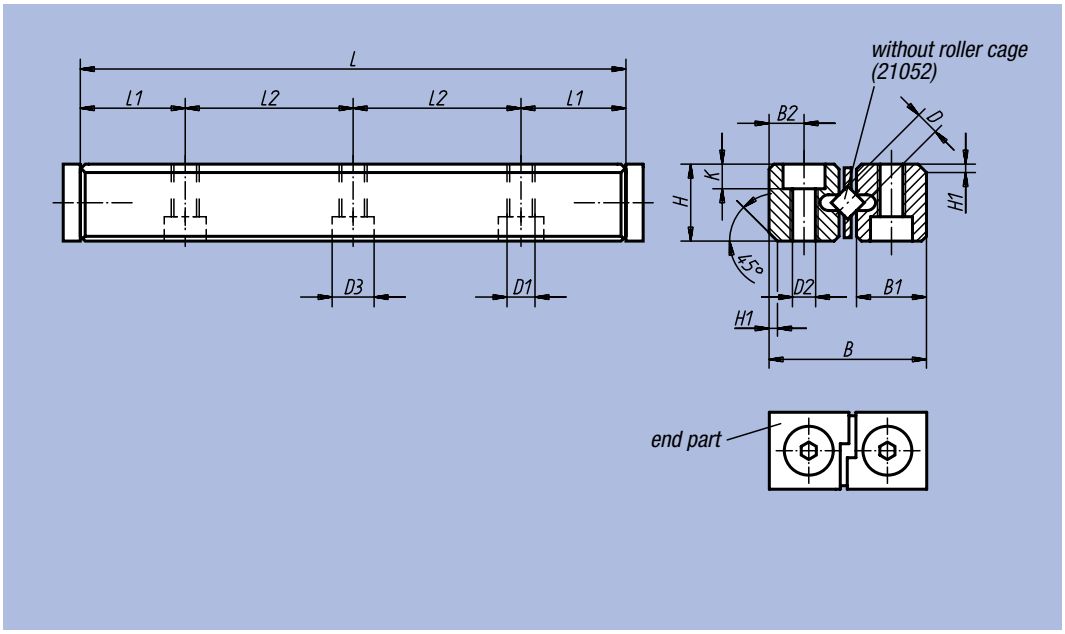

Order No.	D	L	L1	L2	B	B1	B2	H	H1	K	D1	D2	D3	g per rail
21050-02030	2	30	7,5	1x15	12	5,5	2,5	6	1	2,2	M3	2,55	4,4	8
21050-02045	2	45	7,5	2x15	12	5,5	2,5	6	1	2,2	M3	2,55	4,4	11
21050-02060	2	60	7,5	3x15	12	5,5	2,5	6	1	2,2	M3	2,55	4,4	14
21050-03050	3	50	12,5	1x25	18	8,3	3,5	8	1	3,2	M4	3,4	6	23
21050-03075	3	75	12,5	2x25	18	8,3	3,5	8	1	3,2	M4	3,4	6	34
21050-03100	3	100	12,5	3x25	18	8,3	3,5	8	1	3,2	M4	3,4	6	45
21050-03125	3	125	12,5	4x25	18	8,3	3,5	8	1	3,2	M4	3,4	6	56
21050-03150	3	150	12,5	5x25	18	8,3	3,5	8	1	3,2	M4	3,4	6	67
21050-06100	6	100	25	1x50	31	13,9	6	15	1,8	5,2	M6	5,4	10	145
21050-06150	6	150	25	2x50	31	13,9	6	15	1,8	5,2	M6	5,4	10	220
21050-06200	6	200	25	3x50	31	13,9	6	15	1,8	5,2	M6	5,4	10	295
21050-06250	6	250	25	4x50	31	13,9	6	15	1,8	5,2	M6	5,4	10	370
21050-06300	6	300	25	5x50	31	13,9	6	15	1,8	5,2	M6	5,4	10	445
21050-06350	6	350	25	6x50	31	13,9	6	15	1,8	5,2	M6	5,4	10	520

Roller Cages

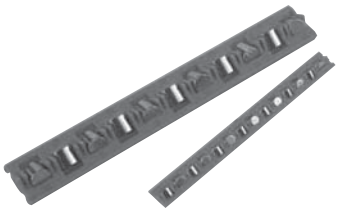

Material:
Plastic cage,
tool steel rollers 1.2842

Sample order:
nlm 21052-02010 with indication of the number of rollers in the cage (010 = 10 rollers). Dimensioning formula, see right.

Dimensioning formula:

$$\text{number of rollers in the cage} = \frac{\text{length of Guide Rails - ½ stroke}}{\text{division T}}$$

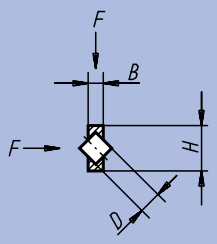

Order No.	D	B	H	T (Division)	Load F in N/roller
21052-02***	2	0,5	4,5	4	60
21052-03***	3	1	7,5	5	100
21052-06***	6	2,4	15	9	400

Notes:

Short Positioning Tables



Material:
Support bearing and carriage made of anodized aluminium alloy. Ground stainless steel guiding columns. Stainless steel screw with rolled thread. Guiding: smooth maintenance-free bearings

Surface finish:
Specifications: Radial guidance play < 0.02 mm, no axial play. Self-locking screw with additional locking system.

Sample order:
nlm 21100-04

Note:
The guiding system is practically free of play and there is absolutely no play in the screw. That is why no adjustment of the screw is required.
5 or 10 graduation scale.
Each graduation represents a 0.1 mm displacement.
Because of it's modular design, the positioning table can be easily combined with the accessories of it's category.

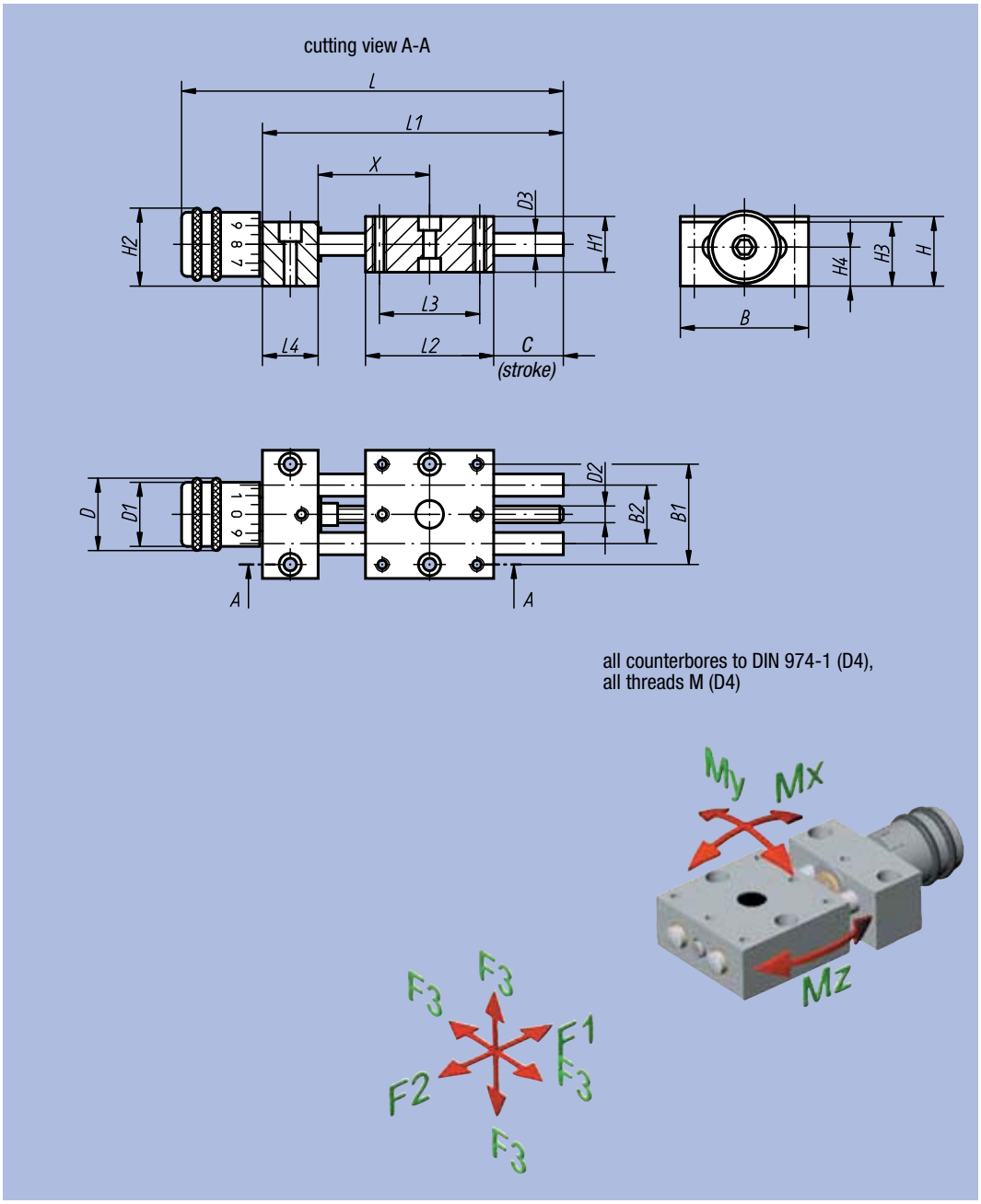

Order No.	B	B1	B2	C	D	D1	D2	D3	D4	H	H1	H2	H3	H4	L	L1	L2	L3	L4	F1 (N)	F2 (N)	F3 (N)	Mx Nm	My Nm	Mz Nm	kg
21100-04	29	22	12	11	13	11,5	M3x0,5	4	3	14	12	14,5	13	8	64,5	50	29	22	10	70	70	X = 28 (10)	0,25	0,11	0,25	0,045
21100-08	46	36	21	14	26	23	M6x1	8	4	24	20	27	23	14	108,5	80	46	36	20	200	200	X = 39 (50)	1,9	0,9	1,9	0,254
21100-12	75	60	38	25	26	23	M6x1	12	6	28	25	29	27	15,5	162	133	75	60	30	300	300	X = 58 (100)	5,5	3	5,5	0,746

Short Positioning Tables

with position indicator



Material:
Support bearing and carriage made of anodized aluminium alloy. Ground stainless steel guiding columns. Stainless steel screw with rolled thread. Guiding: smooth maintenance-free bearings.
Position indicator in plastic

Surface finish:
Specifications: Radial guidance play < 0.02 mm, no axial play. Self-locking screw with additional locking system

Sample order:
nlm 21102-08

Note:
Owing to the virtually play-free guides and the absolutely play-free spindle, no loosening and clamping is required upon disassembly.
Digital position indicators with 0.1 mm indication accuracy, numbers ascending upon rightward rotation. The indication value can be adjusted by turning and clamping the actuator ring. The assembly position of the position indicator can be set in 4 positions by means of a screw.
Because of it's modular design, the positioning table can be easily combined with the accessories of it's category.

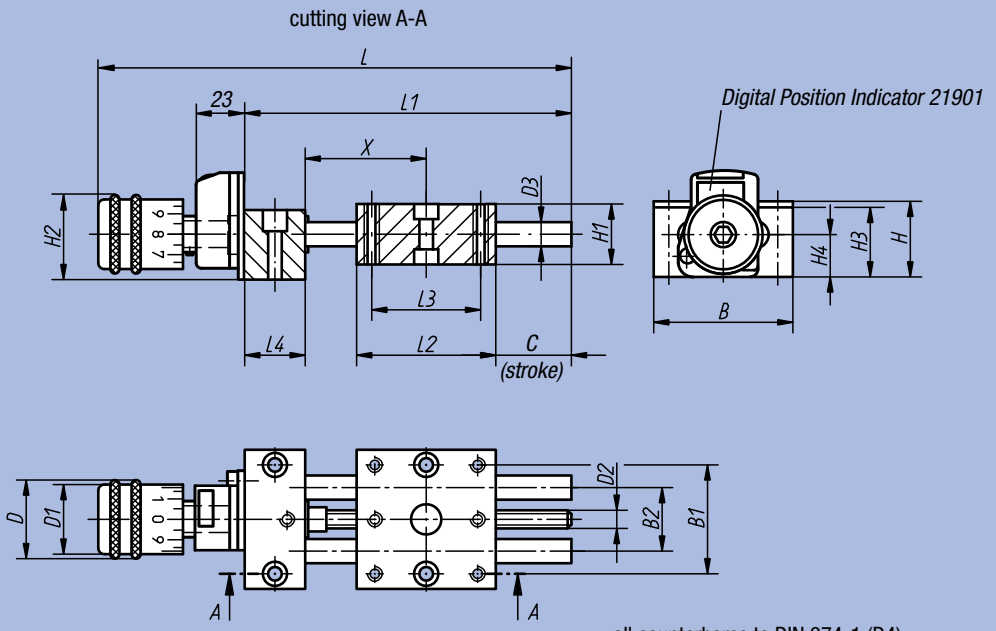

Assembly position of position indicator

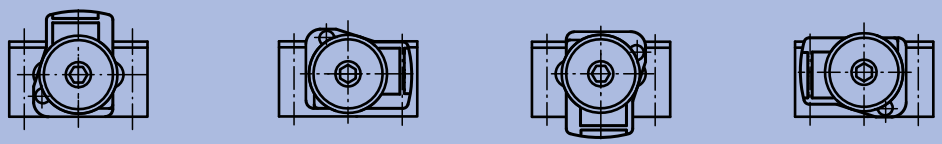

above (standard) | right | down | left

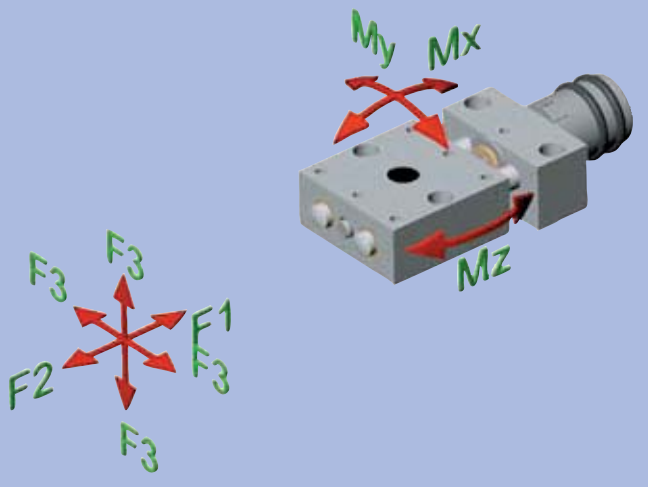

Order No.	B	B1	B2	C	D	D1	D2	D3	D4	H	H1	H2	H3	H4	L	L1	L2	L3	L4	F1 (N)	F2 (N)	F3 (N)	Mx Nm	My Nm	Mz Nm	kg
21102-08	46	36	21	14	26	23	M6x1	8	4	24	20	27	23	14	135	80	46	36	20	200	200	X = 39 (50)	1,9	0,9	1,9	0,288
21102-12	75	60	38	25	26	23	M6x1	12	6	28	25	29	27	15,5	187,5	133	75	60	30	300	300	X = 58 (100)	5,5	3	5,5	0,767

Long Positioning Tables



Material:
Support bearing and carriage made of anodized aluminium alloy. Ground stainless steel guiding columns. Stainless steel screw with rolled thread. Guiding: smooth maintenance-free bearings

Surface finish:
Specifications: Radial guidance play < 0.02 mm, no axial play. Self-locking screw with additional locking system.

Sample order:
nlm 21120-04

Note:
The guiding system is practically free of play and there is absolutely no play in the screw. That is why no adjustment of the screw is required. 5 or 10 graduation scale. Each graduation represents a 0.1 mm displacement.
Because of it's modular design, the positioning table can be easily combined with the accessories of it's category.

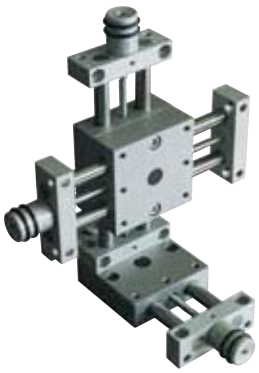

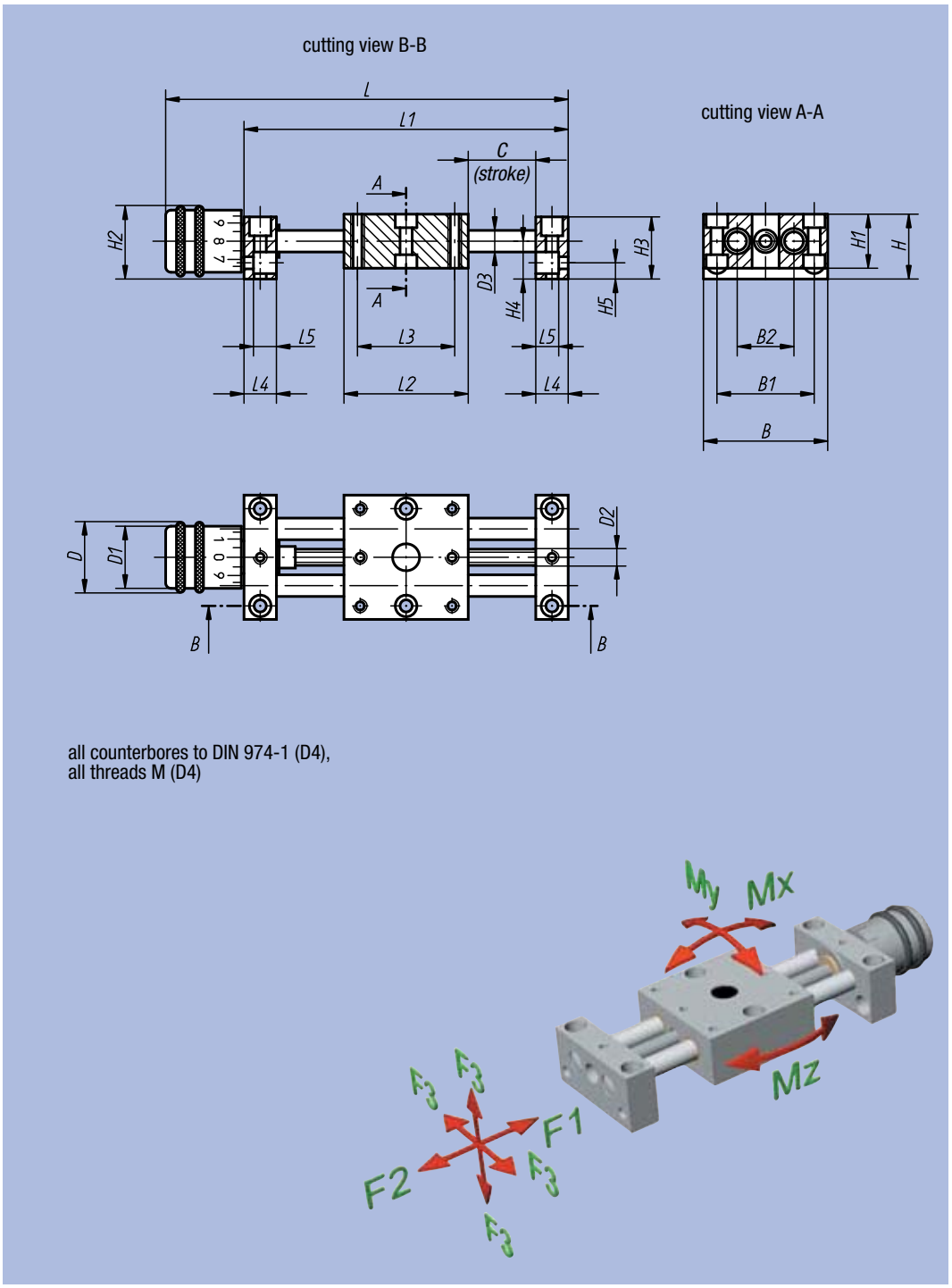

Order No.	B	B1	B2	C	D	D1	D2	D3	D4	H	H1	H2	H3	H4	H5	L	L1	L2	L3	L4	L5	F1 (N)	F2 (N)	F3 (N)	Mx Nm	My Nm	Mz Nm	kg
21120-04	29	22	12	23	13	12	M3x0,5	4	3	14	12	14,5	13	8	4	84,5	70	29	22	8	6	70	70	70	0,77	0,77	0,77	0,046
21120-08	46	36	21	48	26	23	M6x1	8	4	24	20	27	23	14	6	148,5	120	46	36	12	8,5	200	200	200	3,6	3,6	3,6	0,248
21120-12	75	60	38	73	26	23	M6x1	12	6	28	25	28,5	27	15,5	7	209	180	75	60	15	11	300	300	300	18	18	18	0,803
21120-25	150	130	90	86	52	46	M16x2	25	10	53	50	54	52	28	13	347	290	150	130	25	18	1000	1000	1000	65	65	65	6,080

Long Positioning Tables

with position indicator



Material:
Support bearing and carriage made of anodized aluminium alloy. Ground stainless steel guiding columns. Stainless steel screw with rolled thread. Guiding: smooth maintenance-free bearings.
Position indicator in plastic

Surface finish:
Specifications: Radial guidance play < 0.02 mm, no axial play. Self-locking screw with additional locking system.

Sample order:
nlm 21122-08

Note:
Owing to the virtually play-free guides and the absolutely play-free spindle, no loosening and clamping is required upon disassembly.
Digital position indicators with 0.1 mm indication accuracy, numbers ascending upon rightward rotation. The indication value can be adjusted by turning and clamping the actuator ring. The assembly position of the position indicator can be set in 4 positions by means of a screw.
Because of it's modular design, the positioning table can be easily combined with the accessories of it's category.

cutting view B-B

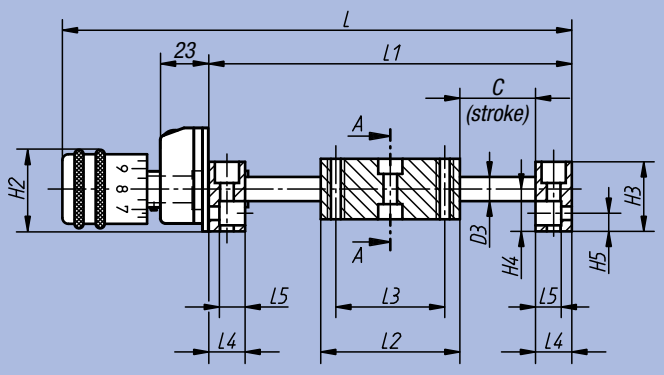

cutting view A-A

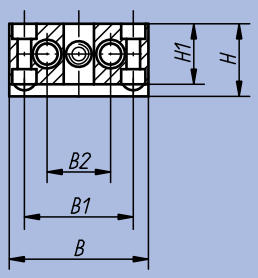

Digital Position Indicator 21901

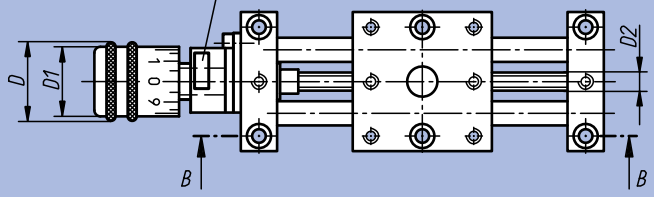

all counterbores to DIN 974-1 (D4),
all threads M (D4)

Assembly position of position indicator

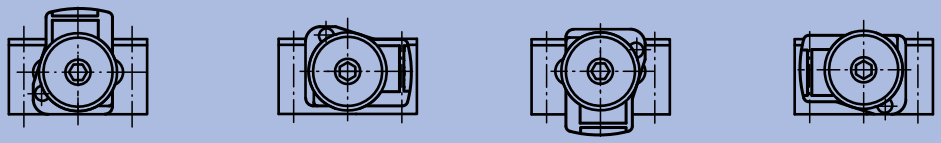

above (standard) | right | down | left

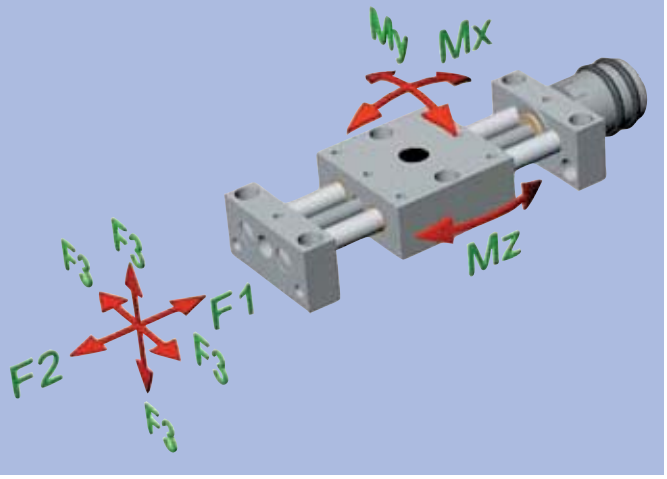

Order No.	B	B1	B2	C	D	D1	D2	D3	D4	H	H1	H2	H3	H4	H5	L	L1	L2	L3	L4	L5	F1 (N)	F2 (N)	F3 (N)	Mx Nm	My Nm	Mz Nm	kg
21122-08	46	36	21	48	26	23	M6x1	8	4	24	20	27	23	14	6	175	120	46	36	12	8,5	200	200	200	3,6	3,6	3,6	0,324
21122-12	75	60	38	73	26	23	M6x1	12	6	28	25	28,5	27	15,5	7	235	180	75	60	15	11	300	300	300	18	18	18	0,839
21122-25	150	130	90	86	52	46	M16x2	25	10	53	50	54	52	28	13	388	290	150	130	25	18	1000	1000	300	65	65	18	6,300

Lift tables



Material:
Lift table, bearing blocks and scale knob Al alloy, anodized; guiding columns stainless steel, polished; spindle stainless steel, rolled thread; guide, slide bearing, maintenance-free

Surface finish:
Backlash of the guide less than 0.05 mm; spindle self-locking, additionally clampable

Sample order:
nlm 21140-04

Note:
For height-positioning of components and assemblies of all types (e.g., stops, sensors, limit switches, tables, cameras, entire assemblies, etc.). The lift table is height-adjustable by turning the scale knob manually. One graduation line of the scale knob corresponds to 0.1 mm of lifting motion.

Because of it's modular design, the lift table can be easily combined with the accessories of it's category.

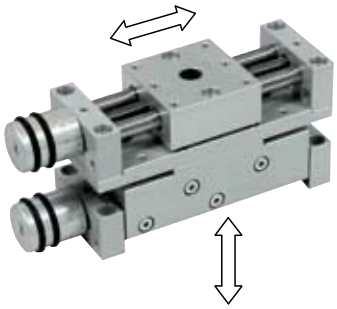

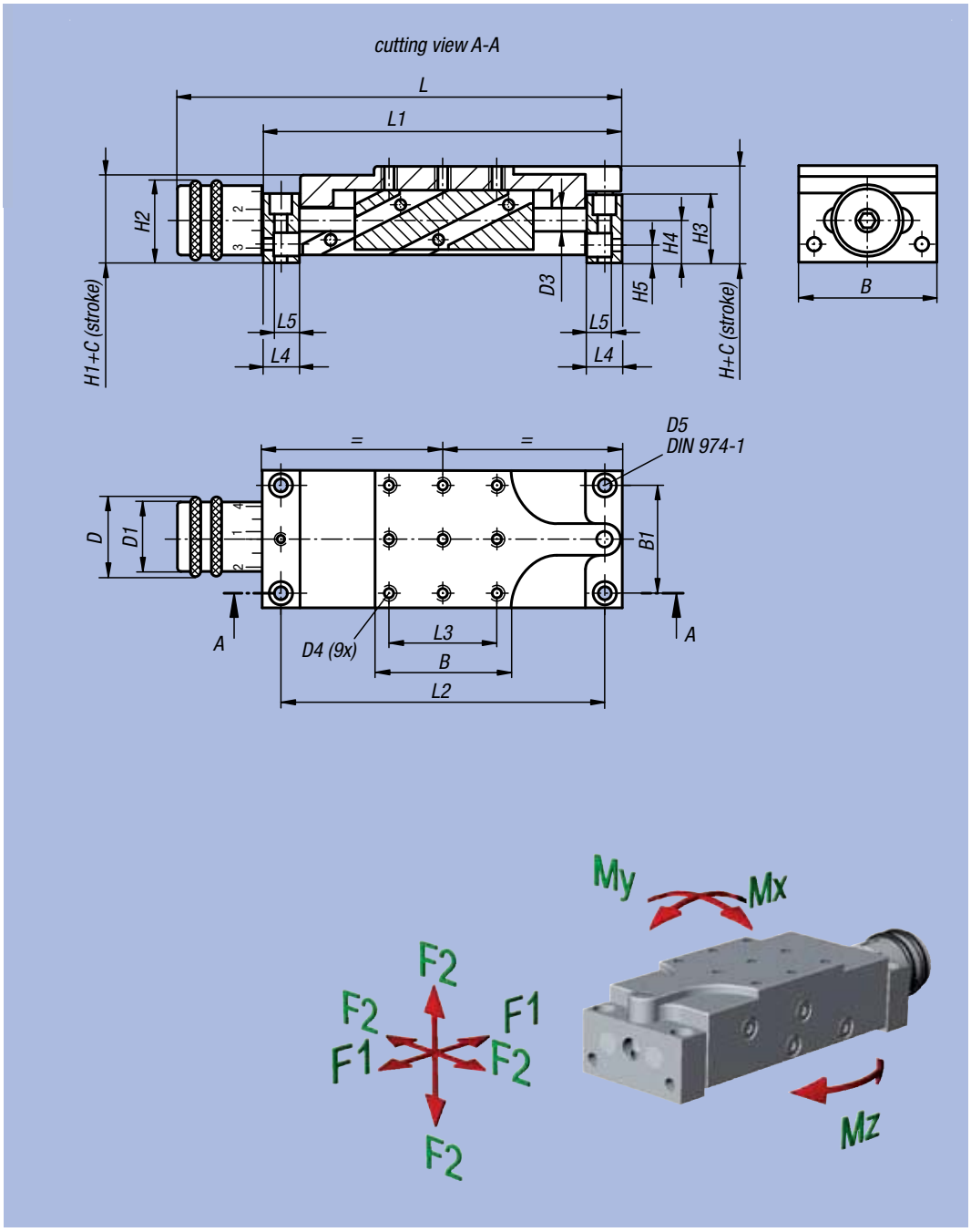

Order No.	B	B1	C	D	D1	D3	D4	D5	H	H1	H2	H3	H4	H5	L	L1	L2	L3	L4	L5	F1 (N)	F2 (N)	Mx (Nm)	My (Nm)	Mz (Nm)	kg
21140-04	29	22	4	13	12	4	M3	3	19	17	14	13	8	4	84,5	70	62	22	8	6	30	50	0,5	0,5	2	0,091
21140-08	46	36	8	26	23	8	M4	4	32	29	27	23	14	6	148,5	120	108	36	12	8,5	80	100	2,5	2,5	5	0,462
21140-12	75	60	12	26	23	12	M6	6	38	36	28,5	27	15,5	7	209	180	165	60	15	11	150	200	10	10	20	1,360
21140-25	150	130	25	52	46	25	M10	10	68	64	54	52	28	13	347	290	265	130	25	18	500	700	50	50	100	7,900

Turning Devices



Material, surface finish:
Base and turning device made of anodised aluminium alloy.
Shaft in stainless steel.

Sample order:
nlm 21150-04

Note:
By loosening the clamp levers, the turning device can be rotated on the base. Revolving at 360°. The turning device catches every 90° (21150-25 every 45°). The catching derives from a ball pressure piece which can be easily disconnected.
A 2° precise graduation serves as the angularity.
Because of it's modular design, the turning device can be easily combined with the accessories of it's category.



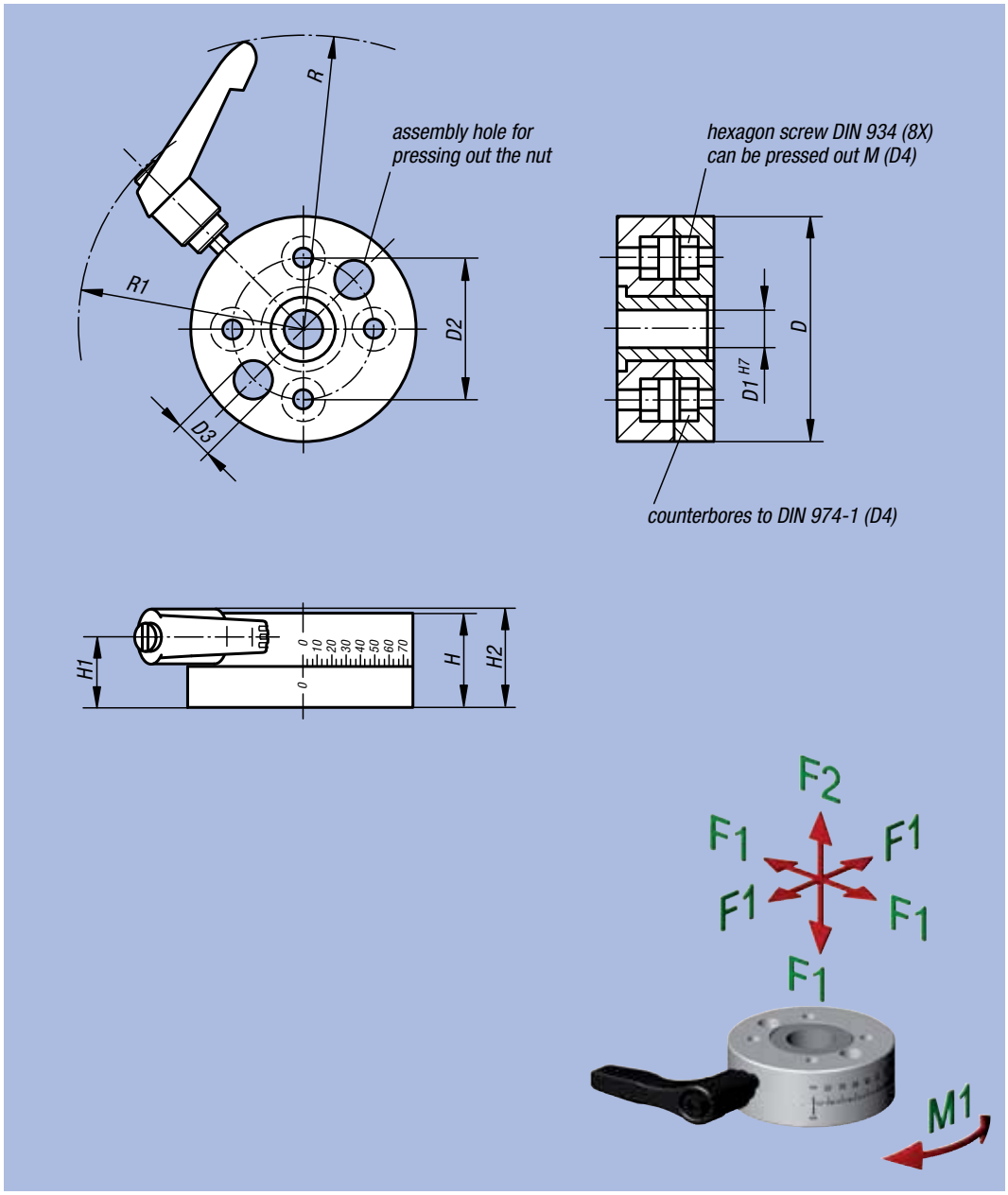

Order No.	D	D1	D2	D3	D4	H	H1	H2	R	R1	F1 (N)	F2 (N)	F3 (N)	M1 Nm	kg
21150-04	35	6	22	6	3	15	9,5	16,5	64	44	200	200	100	2	0,070
21150-08	54	16	36	8	4	20	13,5	20,5	73	56	500	500	200	10	0,160
21150-12	80	25	60	13	6	25	17,5	24,5	85	69	500	500	200	15	0,420
21150-25	150	55	130	18,5	10	40	26	35,5	139	110	1000	500	500	50	2,320

Circular Positioning Tables



Material:
Base and circular table made of anodized aluminium alloy.
Spindle in steel.
Spindle bearing: slide bearing, maintenance-free

Surface finish:
Radial play of the rotary shaft < 0,015 mm,
axial play of the rotary shaft < 0,02 mm,
repeating accuracy < 0,05°.
Self-locking spindle.

Sample order:
nlm 21160-08

Note:
360° adjustment with no end stop.
10-graduation scale.
Transmission ratio:
21160-04 = 20:1
21160-08 = 50:1
21160-12 = 55:1
21160-25 = 50:1

Because of its modular design, the circular table can be easily combined with the accessories of its category.

21160-04 to 21160-12

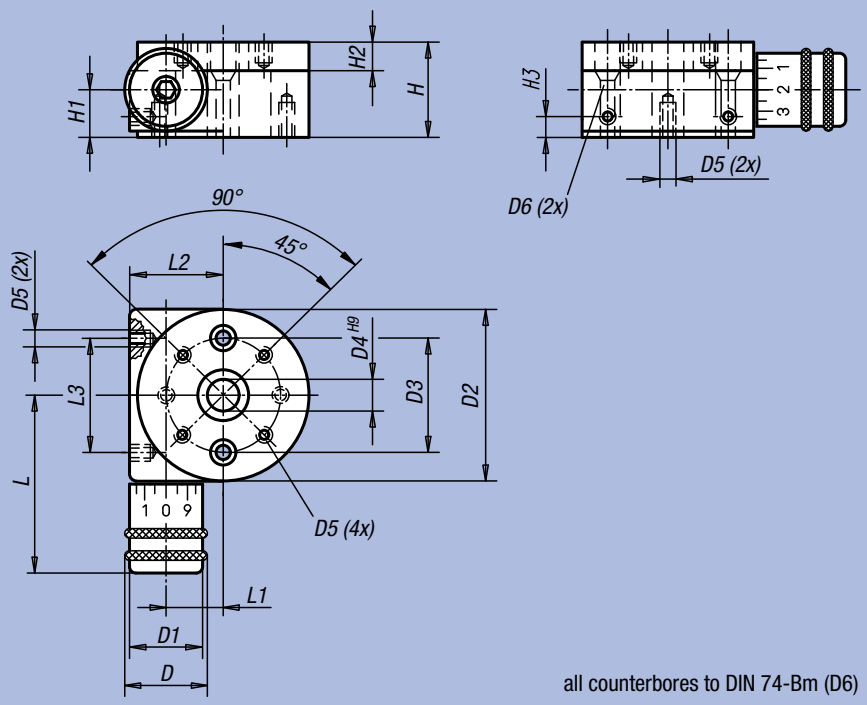

all counterbores to DIN 74-Bm (D6)

21160-25

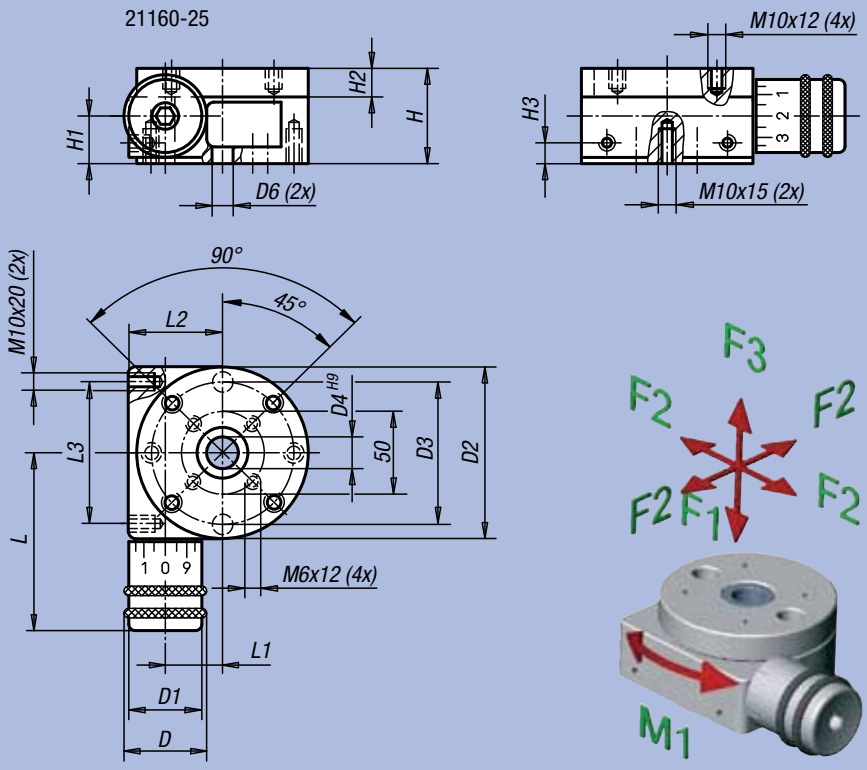

Order No.	D	D1	D2	D3	D4	D5	D6	H	H1	H2	H3	L	L1	L2	L3	F1 (N)	F2 (N)	F3 (N)	M1 Nm	kg
21160-04	13,5	11,5	30	22	4	M3x6	3	25	12	6	4	29,5	8,65	16	22	30	10	10	0,4	0,070
21160-08	26	23	54	36	10	M4x6	4	30	14	9	6	56	17	29	36	500	500	200	3	0,260
21160-12	26	23	80	60	15	M6x9	6	40	17,5	12	6	69	31	43	60	500	500	200	5	0,760
21160-25	51	46	150	130	40	-	10,2	75	35	18	12	134	53	80	130	1000	1000	500	10	4,350

Swivel Angle



Material:
Aluminium alloy

Surface finish:
Milled and anodized

Sample order:
nlm 21162-04

Note:
The swivelling angle is assembled at the positioning round table and hence offers enhanced possibilities for assembly.
Suitable for 21160 in the respective size.



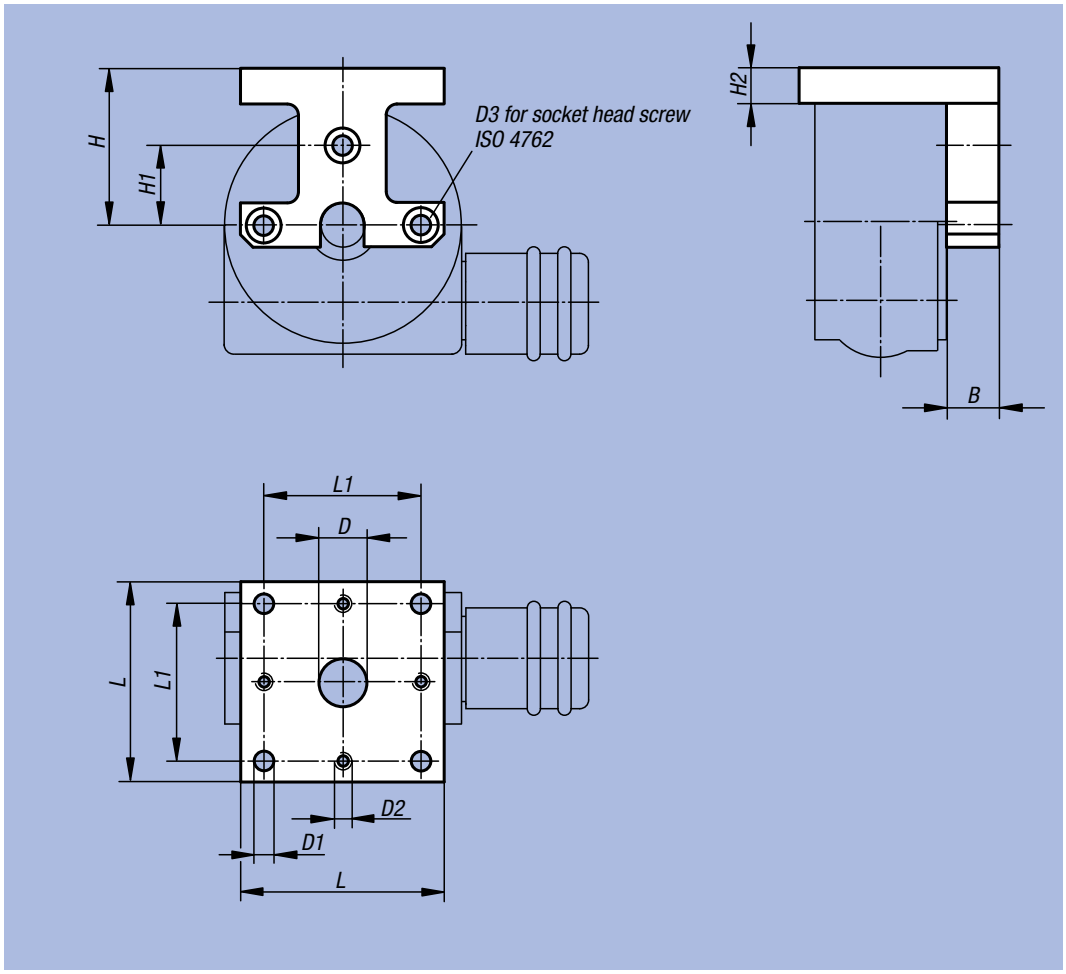

Order No.	B	D	D1	D2	D3	H	H1	H2	L	L1	kg
21162-04	7	6	3,3	M3	M3	22	11	6	29	22	0,017
21162-08	12	11	4,5	M4	M4	36	18	8	46	36	0,064
21162-12	20	16	6,5	M6	M6	51	30	10	75	60	0,237
21162-25	25	40	11	M10	M10	98	65	20	150	130	1,746

Swiveling Tables inclination 30°



Material, surface finish:
Anodized aluminium alloy

Sample order:
nlm 21170-12

Note:
Suitable for 21100, 21102, 21120, 21122, 21150, 21160, 21162 and 21180.

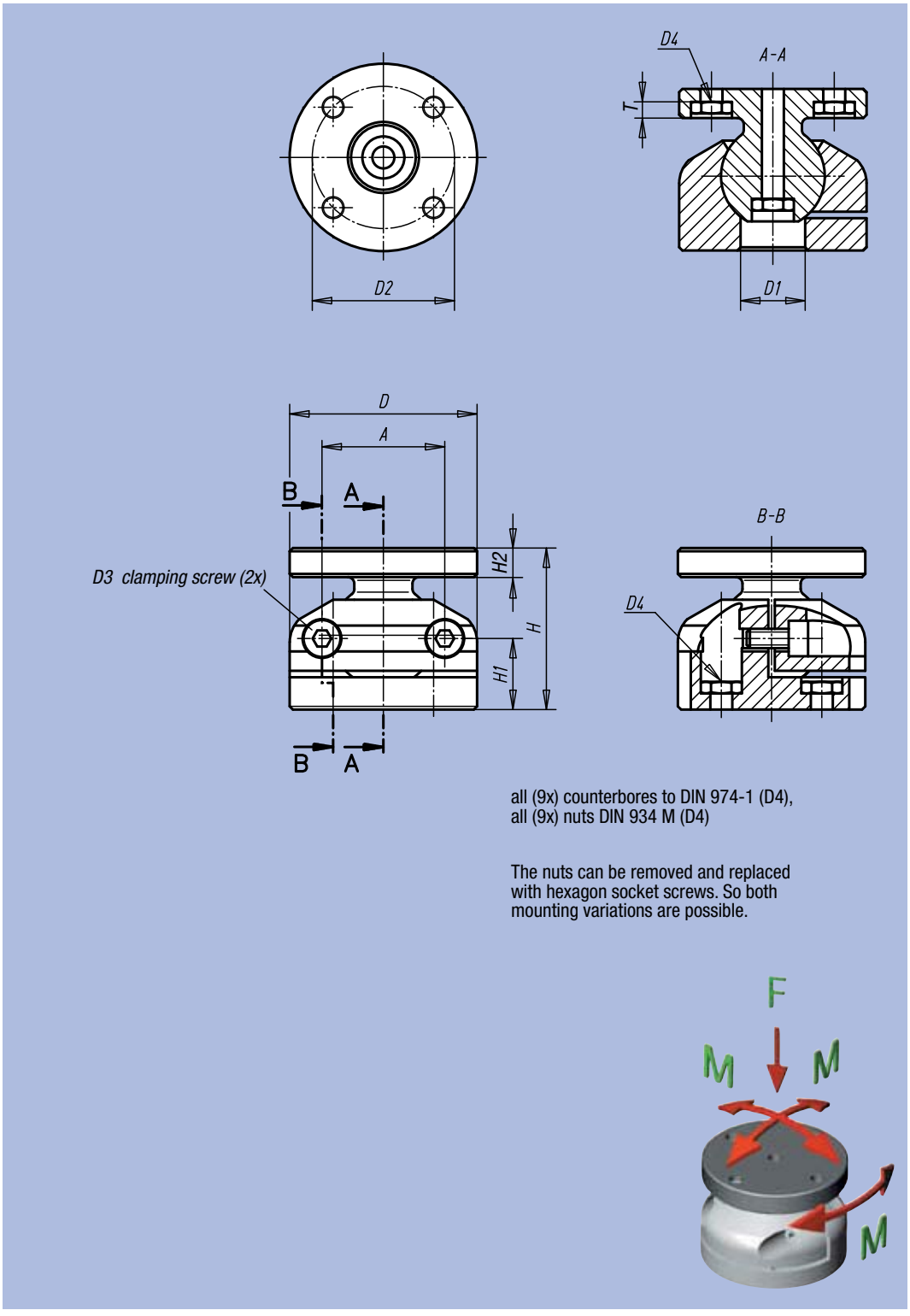

all (9x) counterbores to DIN 974-1 (D4),
all (9x) nuts DIN 934 M (D4)

The nuts can be removed and replaced with hexagon socket screws. So both mounting variations are possible.

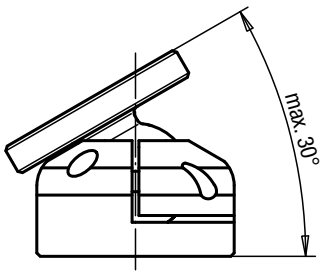

Order No.	A	D	D1	D2	D3	D4	H	H1	H2	T	F N	M Nm	Tightening torque of clamping screws (Nm)	kg
21170-04	19	29	10	22	M3	3	25	11	5,5	3,5	300	3	1,11	0,040
21170-08	30	46	13	36	M4	4	35	15,5	7	4,5	700	8	2,55	0,120
21170-12	46	75	24	60	M6	6	54	23	11	6,6	2200	30	8,6	0,410
21170-25	92	150	40	130	M10	10	105	49	20	11	9000	150	42	3,500

Base Plates



Material, surface finish:
Anodized aluminium alloy

Sample order:
nlm 21180-04

Note:
Suitable for 21100, 21102, 21120, 21122, 21150, 21160, 21162 and 21190 in the respective size.

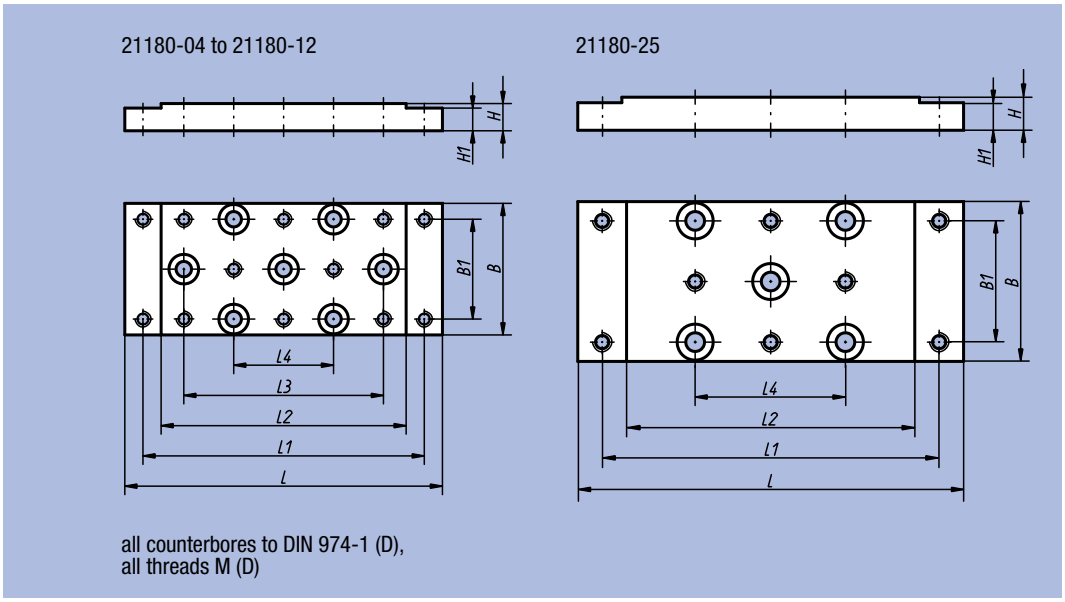

Order No.	B	B1	D	H	H1	L	L1	L2	L3	L4	kg
21180-04	29	22	3	6	5	70	62	54	44	22	0,027
21180-08	46	36	4	8	6	120	108	96	72	36	0,103
21180-12	75	60	6	12	10	180	165	150	120	60	0,410
21180-25	150	130	10	20	18	290	265	240	-	130	2,180

Angle Plates



Material, surface finish:
Milled anodized aluminium alloy

Sample order:
nlm 21190-04

Note:
Suitable for 21100, 21102, 21120, 21122, 21150, 21160, 21162 and 21180 in the respective size.

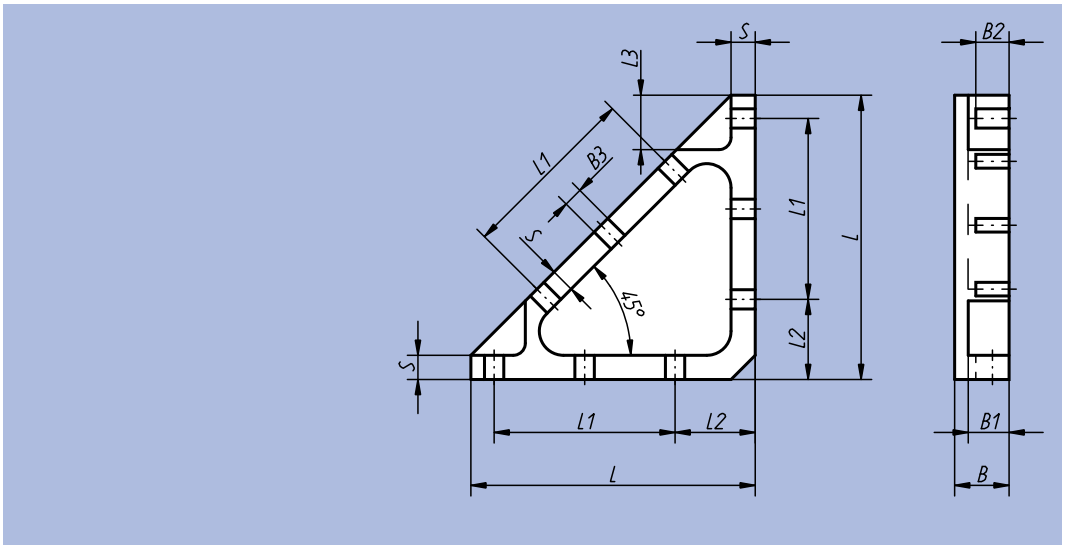

Order No.	B	B1	B2	B3	L	L1	L2	L3	S	kg
21190-04	8	6	4,5	3,3	40	22	14,5	8	3	0,010
21190-08	12	10	8	4,5	58	36	17	11	4	0,025
21190-12	18	13,5	10,8	6,6	94	60	26,5	17,5	8	0,126
21190-25	25	20	15,5	11	180	130	35	31	15	0,591

Mounting examples: positioning tables

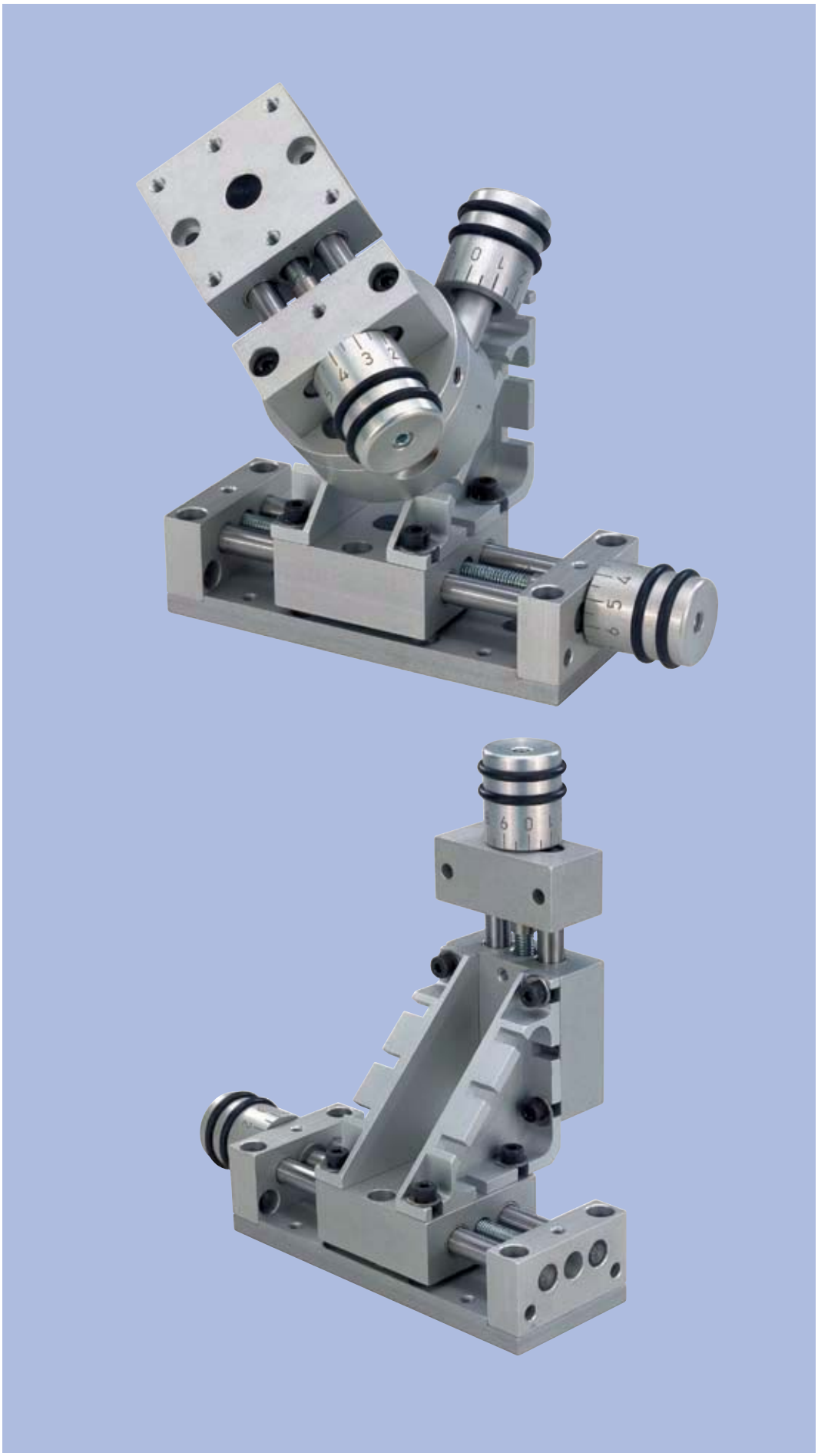

Technical data for sliding guides

Eccentric forces
The following recommendations are to be heeded for the successful use of maintenance-free DryLin® linear bearings.
A greater drive force is to be expected as a result of the friction value, which is higher in comparison with ball-bearing guides. The greatest possible gaps between bearings on a rail and lowest possible torque stress due to the drive and earth have a positive effect on the running and wear properties of the guide.

Quiet running
Plastic bearings, which run on ground shafts or profiled rails, hardly cause any noise. Contrary to conventional ball-bearing guides, the noise level does not increase as the speed increases.

Design notes
When using system with two parallel rails, one side must be designed as the floating bearing. For every fitting position, whether horizontal, vertical or lateral, there is the correct fixed-floating bearing solution. This method of fitting prevents difficulty of access or jamming of the guide in the case of differences in the parallel between the rails.
The floating bearing is produced by removing the statically attuned sliding elements. Therefore an additional degree of freedom occurs on a rail in the direction of the expected error in parallel.
In the case of a fixed-floating bearing errors in parallel between the mounted rails can be compensated up to a maximum range of 0.5 mm. When fitting them, ensure that the floating bearing has an equal amount of play in both directions. You can see the layout of the fixed floating bearing system we recommend from the adjacent images.
The connection surfaces for the rails and guide carriage should have a good evenness (e.g. milled surface), in order to avoid warping in the system. Small amounts of unevenness in the connection surfaces can be individually compensated up to a certain dimension (0.5 mm), by increasing the play. Adjusting the play is only effective in the unstressed state.

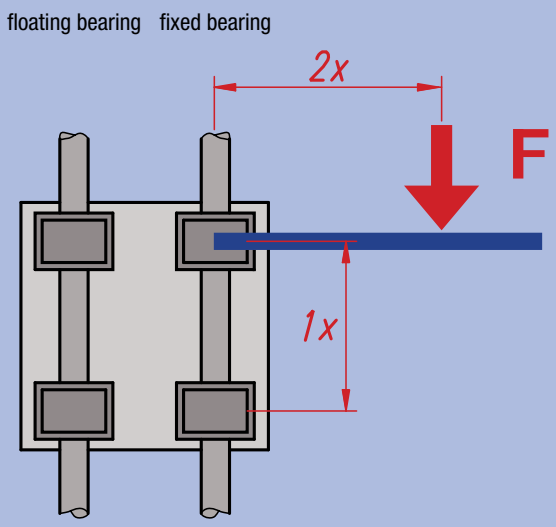

The 2:1 Rule
If the 2:1 rule is not followed when using linear slider bearings, uneven movements may occur or the system may even jam. Help can often be provided by relatively easy changes.
The principle does not depend on the stress or the drive force. It is a product of friction and always relates to the fixed bearing.
The farther away the drive is from the guide bearing, the greater will be the wear and the drive force required.
If the distance between the driving force and the fixed bearing is more than double the distance between the bearings (2:1 rule), the guide will jam in theory at coefficient of adhesion of 0.25.

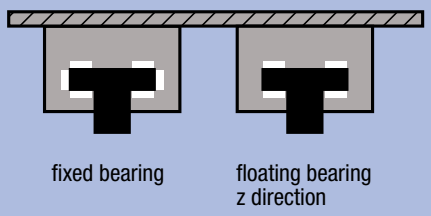

Horizontal variant with the floating bearing in the z-direction

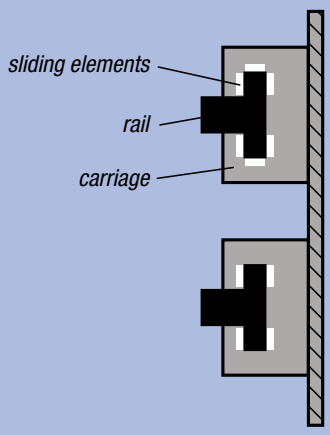

Lateral variant with the floating-bearing in the z-direction

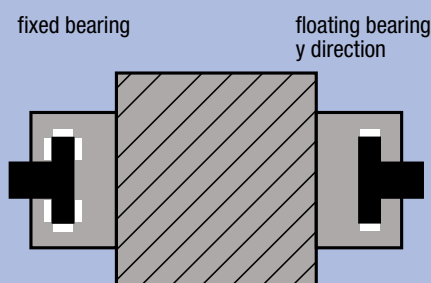

Horizontal variant with lateral positioned guide carriage and floating bearing in the y-direction

Technical data for sliding guides

DryLin® T - play adjustment
DryLin® T linear sliding guides require a minimum amount of play between the slide and rail. They are supplied ready to use with the play pre-set. If you have special requirements please state whether you require a particularly small or particularly large amount of play.
The play in the bearing of the guide slidings can be adjusted later if necessary. This should always be done without additional load.

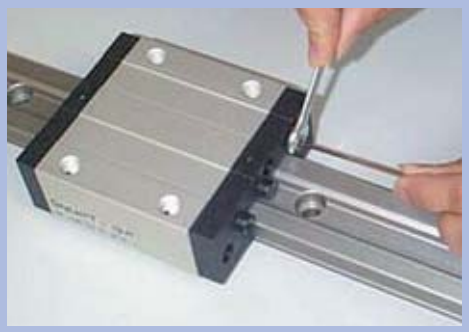

1. Loosen the counter-nuts after removing the protective caps.
   Spanner size:
   SS 5 for standard 21200-15..
   SS 5 for standard 21200-20..
   SS 7 for standard 21200-25..
   SS 7 for standard 21200-30..



2. Readjust the bearing play for the three guide points with an Allan key. Spanner size:
   1.5 mm for standard 21200-15..
   1.5 mm for standard 21200-20..
   2.0 mm for standard 21200-25..
   2.0 mm for standard 21200-30..

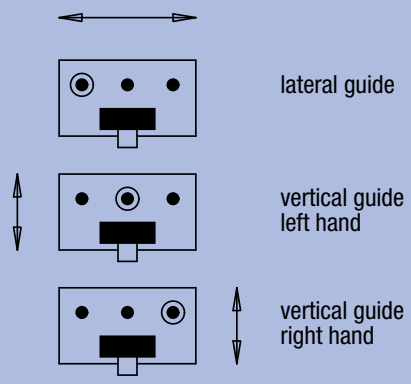



3. Check the play in the guide slidings after adjustment. If it is sufficient, tighten the counter-nuts and replace the protective caps.

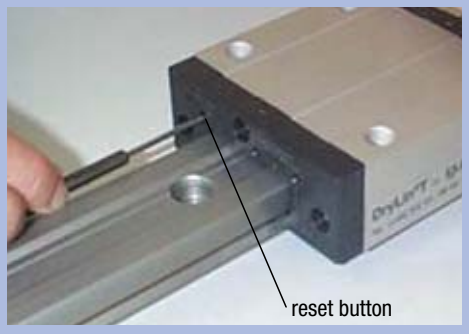

4. If the play has been set too narrow so that the guide sliding jams, it is not enough just to return the Allan bolt to its previous position. After screwing it back, press the reset button on the side opposite the bolt in order to release the sliding elements again. To do this, use a pin of the following size:
   2.5 mm for standard 21200-15..
   2.5 mm for standard 21200-20..
   3.0 mm for standard 21200-25..
   3.0 mm for standard 21200-30..

Carriages DryLin® T



Material:
Sliding Carriage: Base structure in extruded section, aluminium EN AW-6060.
Sliding elements: Maintenance free plain bearing iglidur® J.
Cap: Thermoplastic

Surface finish:
Eloxal-coated E6/EV1.
Black thermoplastic

Sample order:
nlm 21200-1500

Note:
With a low rate of inerita, high accelerations and short term extreme speeds up to 30 m/s are possible. DryLin® T linear slider guides are resistant to dirt and corrosion. They are maintenance-free, adjustable and quiet. Application temperature max. 80 °C.
Recommended for use in food, medical, and clean room technologies, since no lubricants are present.
Manual clamping was developed for simple functions. A clamped polymer has a tendency to creep, which causes a decrease in clamping force over time (up to 70%). Therefore, applications for DryLin® T with clamp are restricted.
Suitable Guide Rails see 21200.

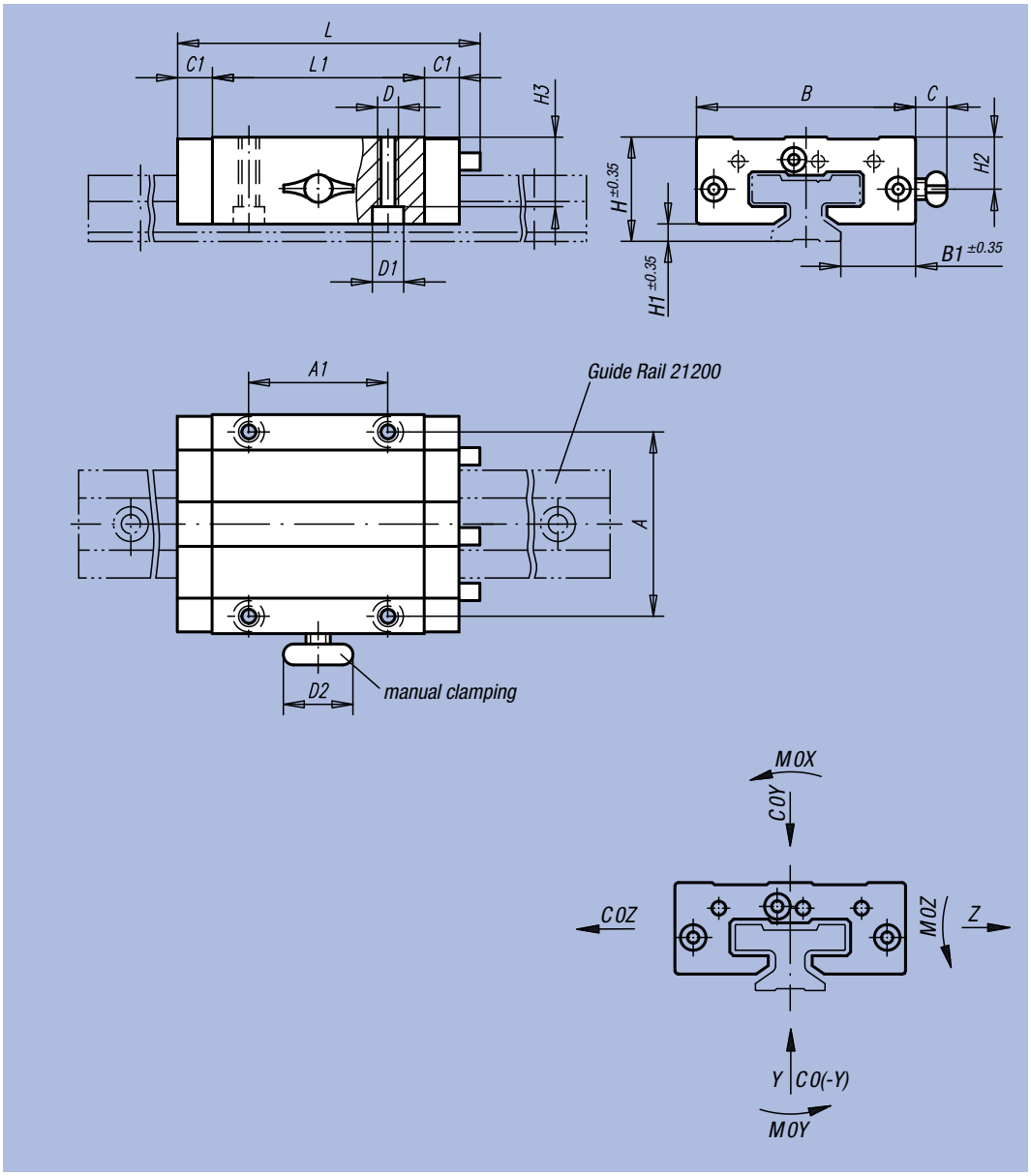

Order No. Surface finish fixed bearing standard	Order No. Surface finish fixed bearing with manual clamping	Order No. Surface finish floating bearing in y direction	Order No. Surface finish floating bearing in z direction	Size	C0Y kN	C0(-Y) kN	C0Z kN	M0X Nm	M0Y Nm	M0Z Nm	A	A1	B	B1
21200-1500	21200-1510	21200-1520	21200-1530	15	4	4	2	32	25	25	38	30	47	16
21200-2000	21200-2010	21200-2020	21200-2030	20	7,4	7,4	3,7	85	45	45	53	40	63	21,5
21200-2500	21200-2510	21200-2520	21200-2530	25	10	10	5	125	65	65	57	45	70	23,5
21200-3000	21200-3010	21200-3020	21200-3030	30	14	14	7	200	100	100	72	52	90	31

Order No. Surface finish fixed bearing standard	Order No. Surface finish fixed bearing with manual clamping	Order No. Surface finish floating bearing in y direction	Order No. Surface finish floating bearing in z direction	C	C1	D	D1 for screw DIN 912	D2	H	H1	H2	H3	L	L1	Thread of the hand-operated clamp	kg
21200-1500	21200-1510	21200-1520	21200-1530	19	9	M5	M4	20	24	4	11,5	16	74	50	M6	0,110
21200-2000	21200-2010	21200-2020	21200-2030	18	10	M6	M5	28	30	5	15	19,8	87	61	M8	0,190
21200-2500	21200-2510	21200-2520	21200-2530	17	11	M8	M6	28	36	5	19	24,8	96	68	M8	0,290
21200-3000	21200-3010	21200-3020	21200-3030	20	12	M10	M8	28	42	6,5	21,5	27	109	79	M8	0,500

Guide Rails DryLin® T



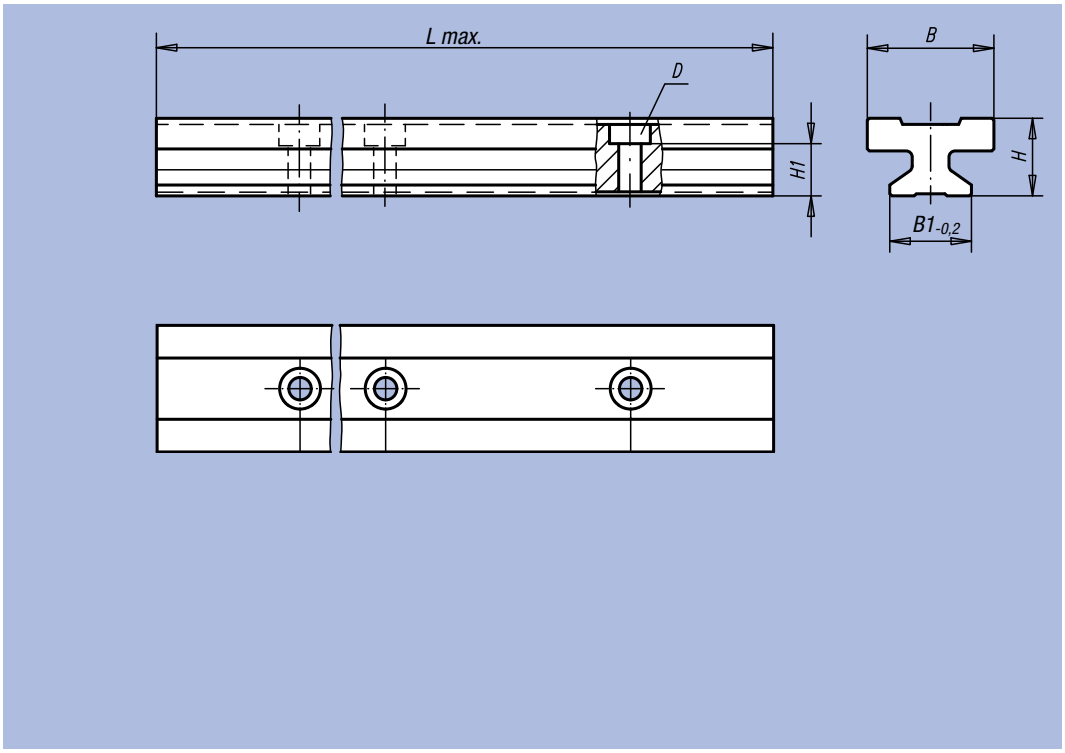

Material:
Extruded section,
aluminium EN AW-6060.

Surface finish:
Hard anodized aluminium, 50 µm.
Hardness 500 HV.

Sample order:
nlm 21200-1530X3960 (L max.)
nlm 21200-1520X500 (per customer request: guide rail size 15)
** please indicate dimension
L2 = 20 mm
* please indicate dimension
L = 500 mm
L2 and L dimensions can only be stated in complete mm.

Note:
The aluminium guide rail has good thermal conductivity and importantly heats only at continuously very high speeds.

Order No.	Surface finish	Size	L max.	L2	L2 min.	L2 max.	B	B1	D for screw DIN 912	H	H1	L1	kg/m
21200-1530X3960	L max.	15	3960	30	-	-	22	15	M4	15,5	10	60	0,600
21200-2030X3960	L max.	20	3960	30	-	-	31	20	M5	19	12,3	60	1,000
21200-2530X3960	L max.	25	3960	30	-	-	34	23	M6	21,5	13,8	60	1,300
21200-3020X3960	L max.	30	3960	20	-	-	40	28	M8	26	15,8	80	1,900
21200-15X***	L2 and L per customer request	15	*	**	20	49	22	15	M4	15,5	10	60	0,600
21200-20X***	L2 and L per customer request	20	*	**	20	49	31	20	M5	19	12,3	60	1,000
21200-25X***	L2 and L per customer request	25	*	**	20	49	34	23	M6	21,5	13,8	60	1,300
21200-30X***	L2 and L per customer request	30	*	**	20	59	40	28	M8	26	15,8	80	1,900

Miniature Linear Guide System DryLin® T

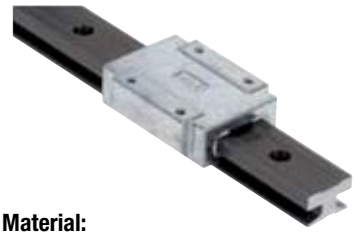

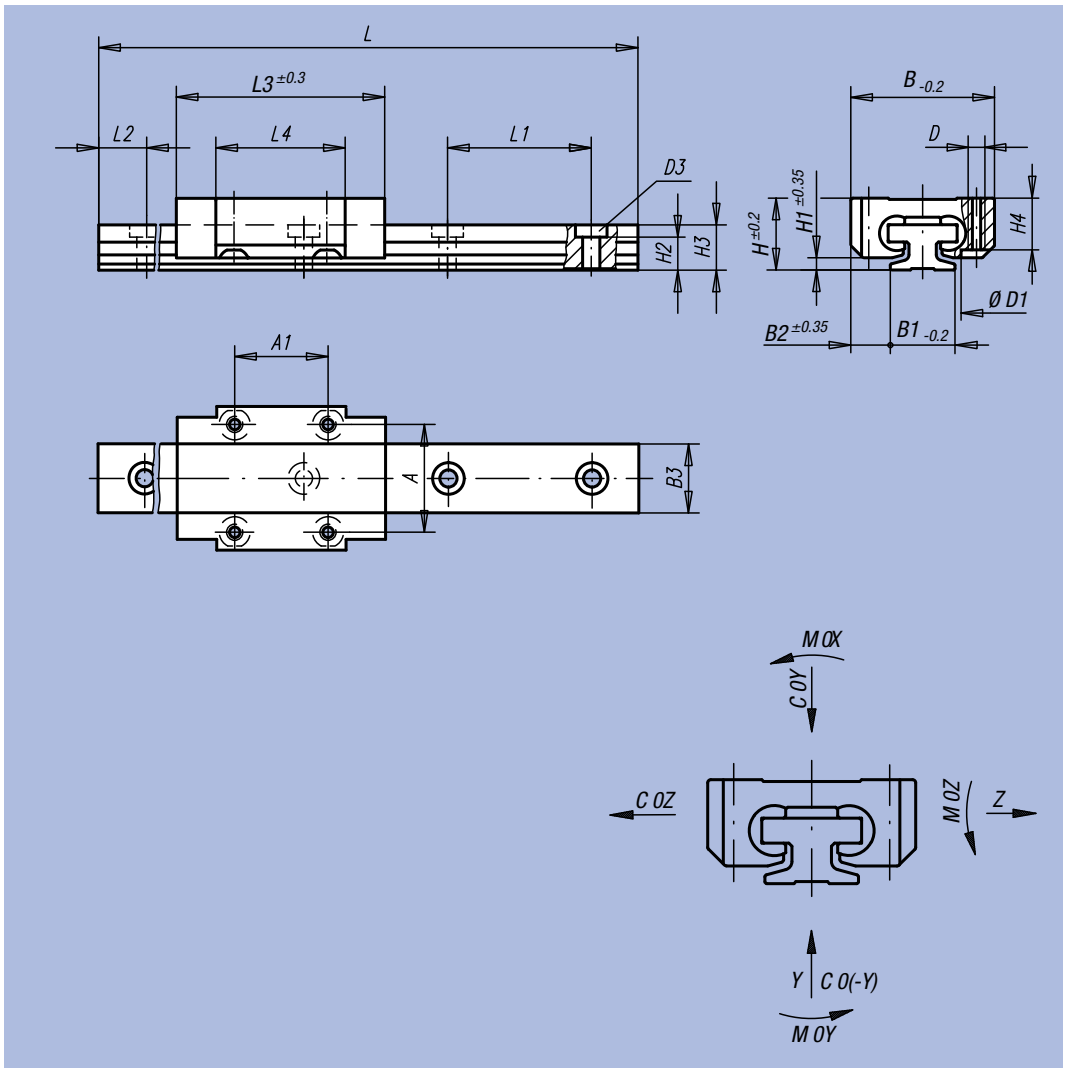

Material:
Sliding Carriage: Base structure in die cast zinc. Sliding elements: Maintenance free plain bearing iglidur® J.
Guide rail in extruded section, aluminium EN AW-6060

Surface finish:
Hard anodized aluminium, 50 µm. Hardness 500 HV.

Sample order:
nlm 21210-0900 (Carriages)

Sample order Guide Rail:
nlm 21210-1212X0800 (L max.)
nlm 21210-1512X500 (per customer request: guide rail size 15)
** please indicate dimension
L2 = 12 mm
* please indicate dimension
L = 500 mm
L2 and L dimensions can only be stated in complete mm.

Note:
Due to their ability to run dry and their resistance to corrosion, miniature linear guides are completely maintenance-free. The slider components in iglidur® J are wear-resistant and replaceable. Can be use in a temperature range up to max. 80°C. The small dimensions are a major advantage of these miniature linear guides.

Carriages

Order No. Surface finish fixed bearing standard	Order No. Surface finish floating bearing in y direction	Order No. Surface finish floating bearing in z direction	Size	C0Y N	C0(-Y) N	C0Z N	M0X Nm	M0Y Nm	M0Z Nm
21210-0900	21210-0920	21210-0930	09	480	480	240	3,4	1,8	1,8
21210-1200	21210-1220	21210-1230	12	960	960	480	9,2	4,4	4,4
21210-1500	21210-1520	21210-1530	15	1400	1400	700	17	8	8

Order No. Surface finish fixed bearing standard	Order No. Surface finish floating bearing in y direction	Order No. Surface finish floating bearing in z direction	Size	A	A1	B	B2	D	D1	H	H1	H4	L3	L4	m kg
21210-0900	21210-0920	21210-0930	09	15	13	20	5,5	M2	4,4	10	1,7	7,2	29	18	0,017
21210-1200	21210-1220	21210-1230	12	20	15	27	7,5	M3	6,5	13	2,2	9,5	34	22	0,034
21210-1500	21210-1520	21210-1530	15	25	20	32	8,5	M3	6,5	16	2,8	11	42	31	0,061

Guide Rails

Order No.	Surface finish	Size	L max.	L2	L2 min.	L2 max.	B1	B3	D3 for screw DIN 912	H2	H3	L1	m kg/m
21210-0910X0800	L max.	09	800	10	-	-	9	9,6	M2	4,6	6,3	20	0,110
21210-1212X0800	L max.	12	800	12,5	-	-	12	13	M3	5,9	8,6	25	0,200
21210-1520X3000	L max.	15	3000	20	-	-	15	17	M3	7	10,8	40	0,330
21210-09**X*	L2 and L per customer request	09	*	**	5	14,5	9	9,6	M2	4,6	6,3	20	0,110
21210-12**X*	L2 and L per customer request	12	*	**	5	19,5	12	13	M3	5,9	8,6	25	0,200
21210-15**X*	L2 and L per customer request	15	*	**	10	29,5	15	17	M3	7	10,8	40	0,330

Low Profile Linear Guide systems DryLin® N



Material:
Base of the car: slider-bearing zinc iglidur® J;
rails of anodized aluminium

Surface finish:
Guide Rail natural colour anodized.
Fixation thread of the guide car in brass

Sample order:
nlm 21230-1700
(Guide Car, fixed bearing)

Sample order Guide Rail:
nlm 21230-1720X1960 (L max.)
nlm 21230-1720X500 (per customer request: guide rail)
** please indicate dimension
L2 = 20 mm
* please indicate dimension
L = 500 mm
L2 and L dimensions can only be stated in complete mm.

Note:
Low-profile miniature guide systems are maintenance-free and corrosion-resistant. Very high speeds and accelerations are possible as a result of their low weight. Can be used in a temperature range of up to 80 °C. Low-profile guide systems are insensitive to dust and are ideally suited to running dry.

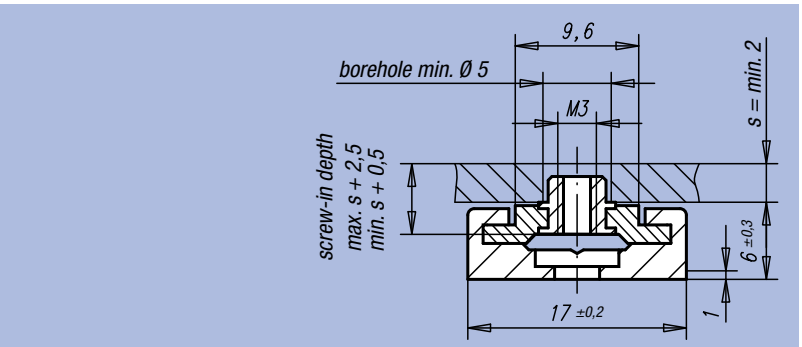

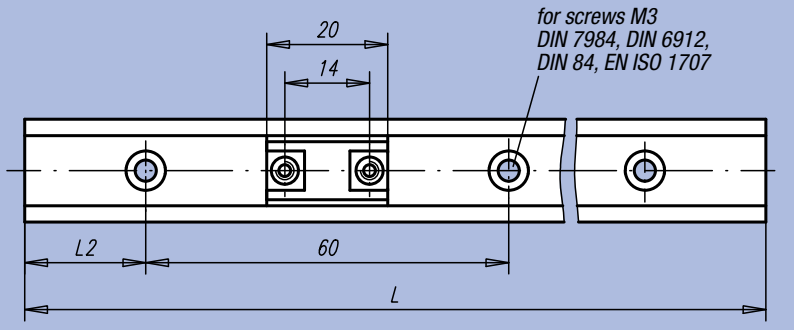

static load capacity and geometrical moment of inertia

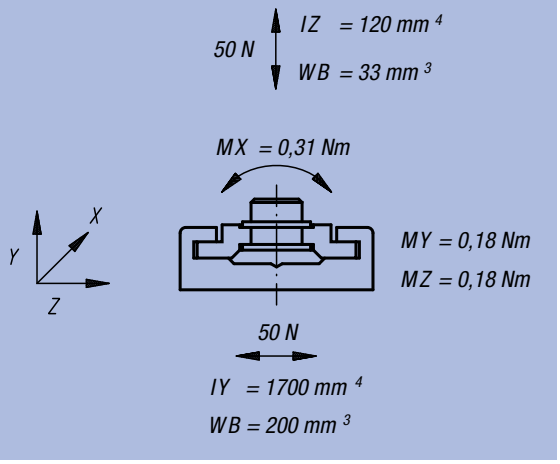

Carriage

Order No.	Surface finish	◻ g guide car
21230-1700	fixed bearing	1,7
21230-1710	floating bearing	1,7

Guide Rails

Order No.	Surface finish	L max.	L2	L2 min.	L2 max.	◻ g/m guide rail
21230-1720X1960	L max.	1960	20	-	-	150
21230-17**X*	L2 and L per customer request	*	**	20	49	150

Low Profile Linear Guide systems DryLin® N



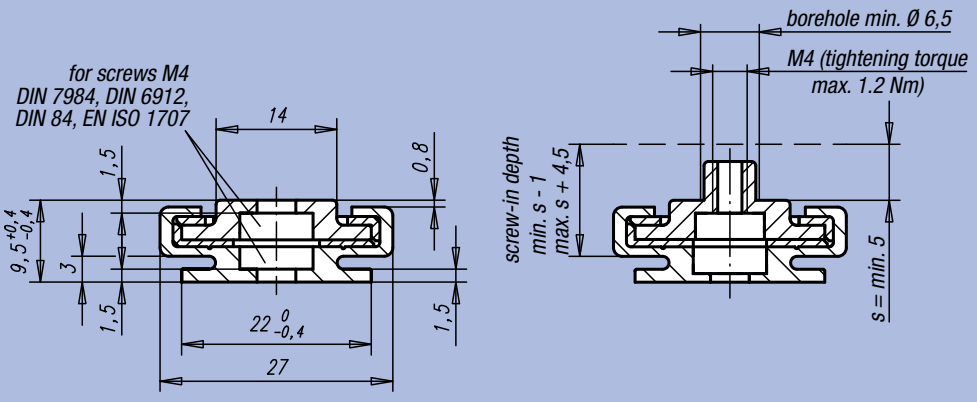

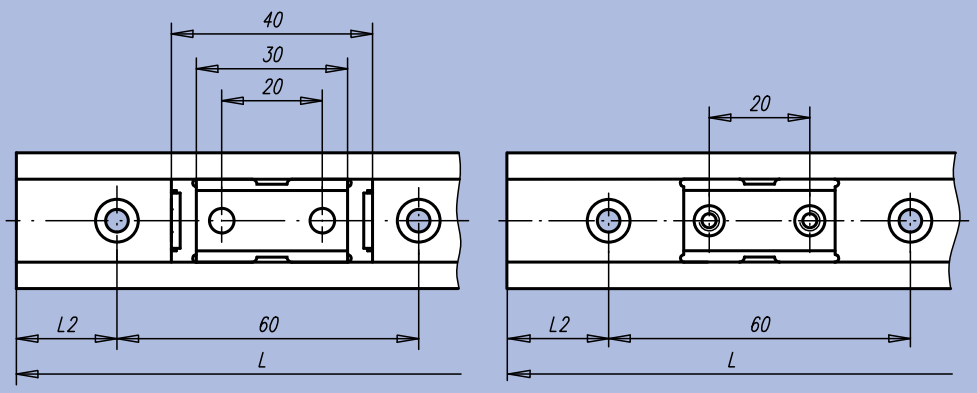

Material:
Carriage base: zinc; plastic slider bearing: iglidur® J.
Rails: anodized aluminium

Surface finish:
Base structure chromated.
Guide Rail anodized natural.

Sample order:
nlm 21230-2700 (guide carriage with transit hole, fixed bearing)

Sample order Guide Rail:
nlm 21230-2730X3000 (L max.)
nlm 21230-2730X1000 (per customer request: guide rail)
** please indicate dimension
L2 = 30 mm
* please indicate dimension
L = 1000 mm
L2 and L dimensions can only be stated in complete mm.

Note:
Low-profile miniature guide systems are maintenance-free and corrosion-resistant. Very high speeds and accelerations are possible as a result of their low weight. Can be used in a temperature range of up to 80 °C. Low-profile guide systems are insensitive to dust and are ideally suited to running dry.

static load capacity and geometrical moment of inertia

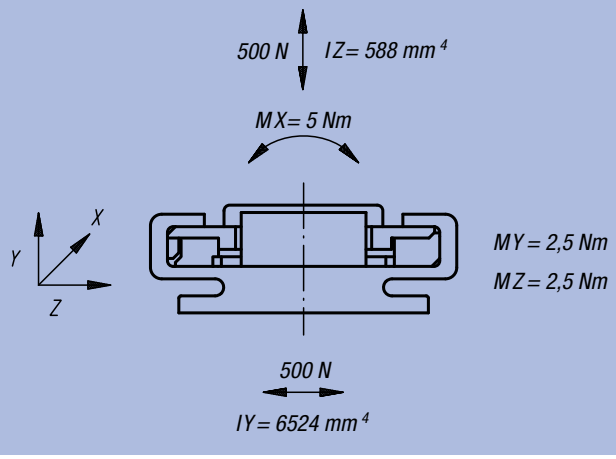

Carriage

Order No. Surface finish fixed bearing	Order No. Surface finish floating bearing	Surface finish	g
21230-2700	21230-2701	Carriages with through hole	10,8
21230-2710	21230-2711	Carriages with threaded hole	12,5

Guide Rails

Order No.	Surface finish	L max.	L2	L2 min.	L2 max.	g/m guide rail
21230-2730X3000	L max.	3000	30	-	-	290
21230-27**X*	L2 and L per customer request	*	**	20	49	290

Low Profile Linear Guide systems DryLin® N



Material:
Sliding Carriage: Base structure in die cast zink. Sliding elements: Maintenance free plain bearing iglidur® J.
Linear Guide in extruded anodized aluminium.

Surface finish:
Base structure chromated.
Guide Rail anodized natural.

Sample order:
nlm 21230-4000
(Carriage, Fixed Bearing)

Sample order Guide Rail:
nlm 21230-4030X3000 (L max.)
nlm 21230-4030X1000 (per customer request: guide rail)
** please indicate dimension
L2 = 30 mm
* please indicate dimension
L = 1000 mm
L2 and L dimensions can only be stated in complete mm.

Note:
Low-profile miniature guide systems are maintenance-free and corrosion-resistant. Very high speeds and accelerations are possible as a result of their low weight. Can be used in a temperature range of up to 80 °C. Low-profile guide systems are insensitive to dust and are ideally suited to running dry.

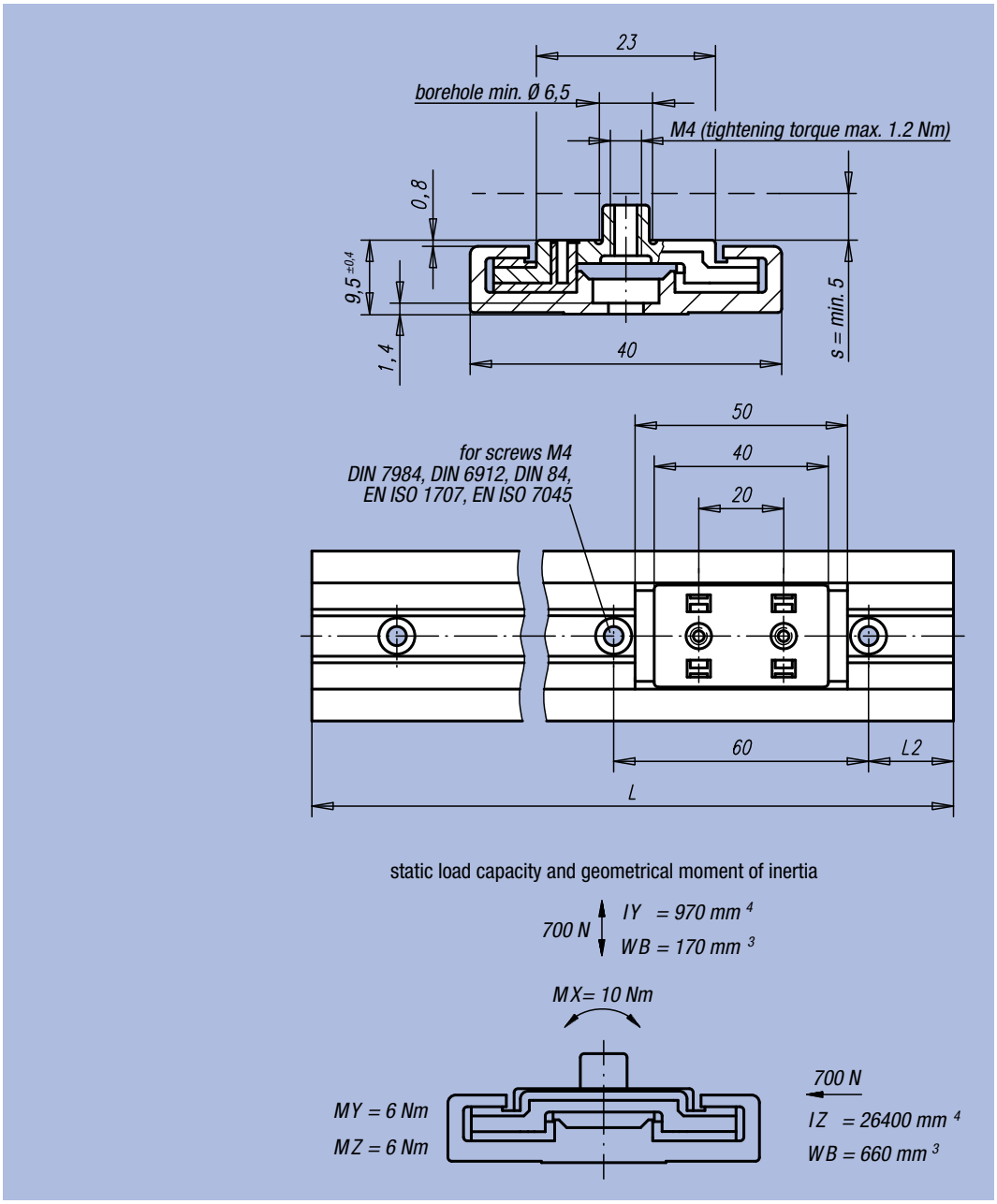

Carriage

Order No.	Surface finish	□ g guide car
21230-4000	fixed bearing	30
21230-4010	floating bearing	30

Guide Rails

Order No.	Surface finish	L max.	L2	L2 min.	L2 max.	□ g/m guide rail
21230-4030X3000	L max.	3000	30	-	-	450
21230-40**X*	L2 and L per customer request	*	**	20	49	450

Low Profile Linear Guide DryLin® N



Material:
Sliding Carriage: Base structure in die cast zink.
Sliding elements: Maintenance free plain bearing iglidur® J.
Linear Guide in extruded anodized aluminium.

Surface finish:
Base structure chromated.
Guide Rail anodized natural.

Sample order:
nlm 21230-8000 (Carriage, Fixed Bearing)

Sample order Guide Rail:
nlm 21230-8030X3960 (L max.)
nlm 21230-8030X1000 (per customer request: guide rail)
** please indicate dimension
L2 = 30 mm
* please indicate dimension
L = 1000 mm
L2 and L dimensions can only be stated in complete mm.

Note:
Low-profile miniature guide systems are maintenance-free and corrosion-resistant. Very high speeds and accelerations are possible as a result of their low weight. Can be used in a temperature range of up to 80 °C. Low-profile guide systems are insensitive to dust and are ideally suited to running dry.

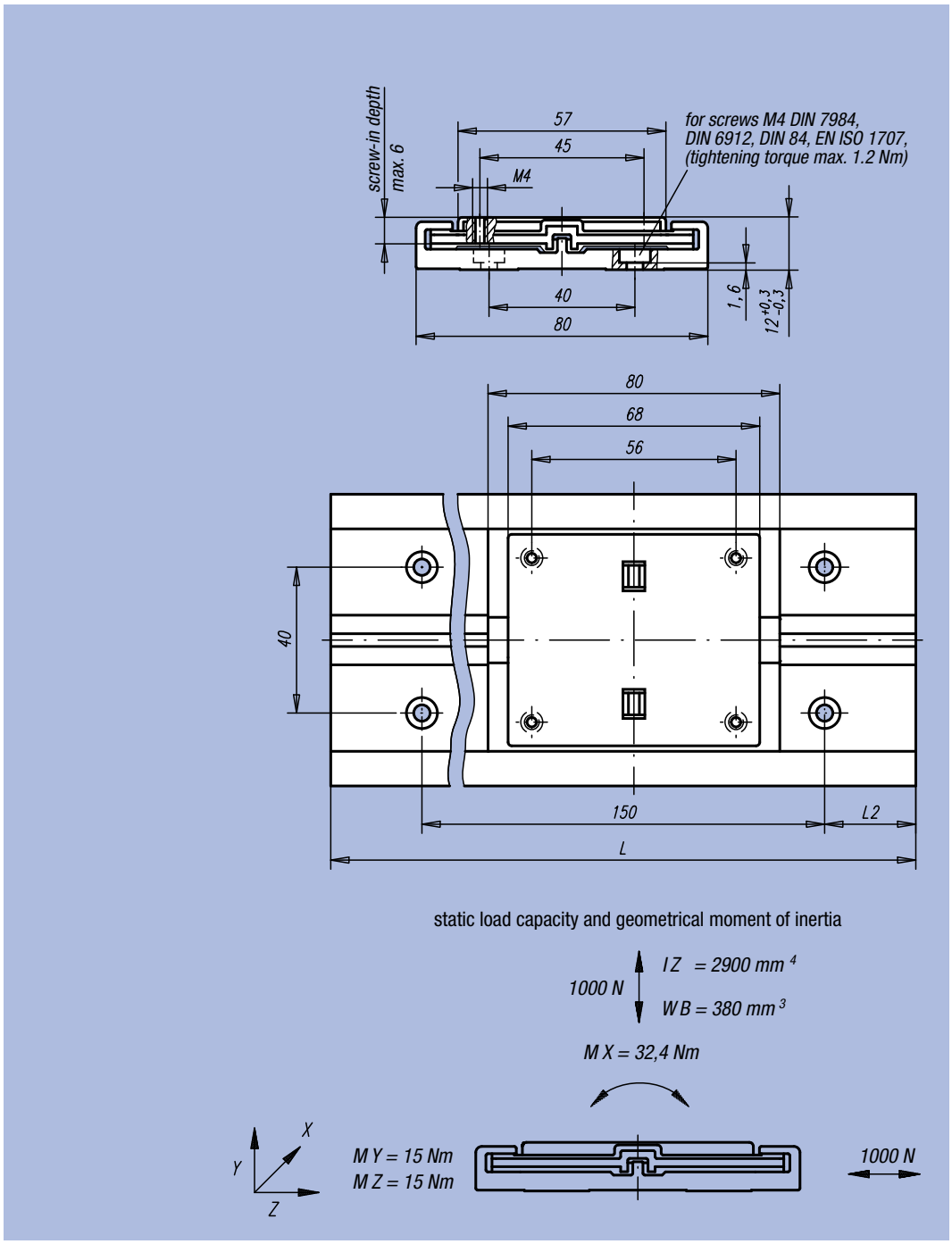

Carriage

Order No.	Surface finish	□ g guide car
21230-8000	fixed bearing	100
21230-8010	floating bearing	100

Guide Rails

Order No.	Surface finish	L max.	L2	L2 min.	L2 max.	□ g/m guide rail
21230-8030X3960	L max.	3960	30	-	-	1140
21230-80**X*	L2 and L per customer request	*	**	25	100	1140

Carriages DryLin® W



Material:
Sliding carriage in die cast zinc;
mounting plate in aluminium;
plain bearing in iglidur® J.

Surface finish:
Sliding carriage chromated;
mounting plate anodized

Sample order:
nlm 21240-0600060

Note:
DryLin® W carriages are maintenance-free and corrosion-resistant. Lacking the need of lubrication makes the system highly dirt resistant. Low friction coefficients in the dry running condition and very quiet run. Owing to the flat and broad design, it is possible to support high torques. Speeds up to 15 m/s.
Can be used in a temperature range of -40 °C up to 90 °C.

Accessory:
Guide rails, dual 21240.

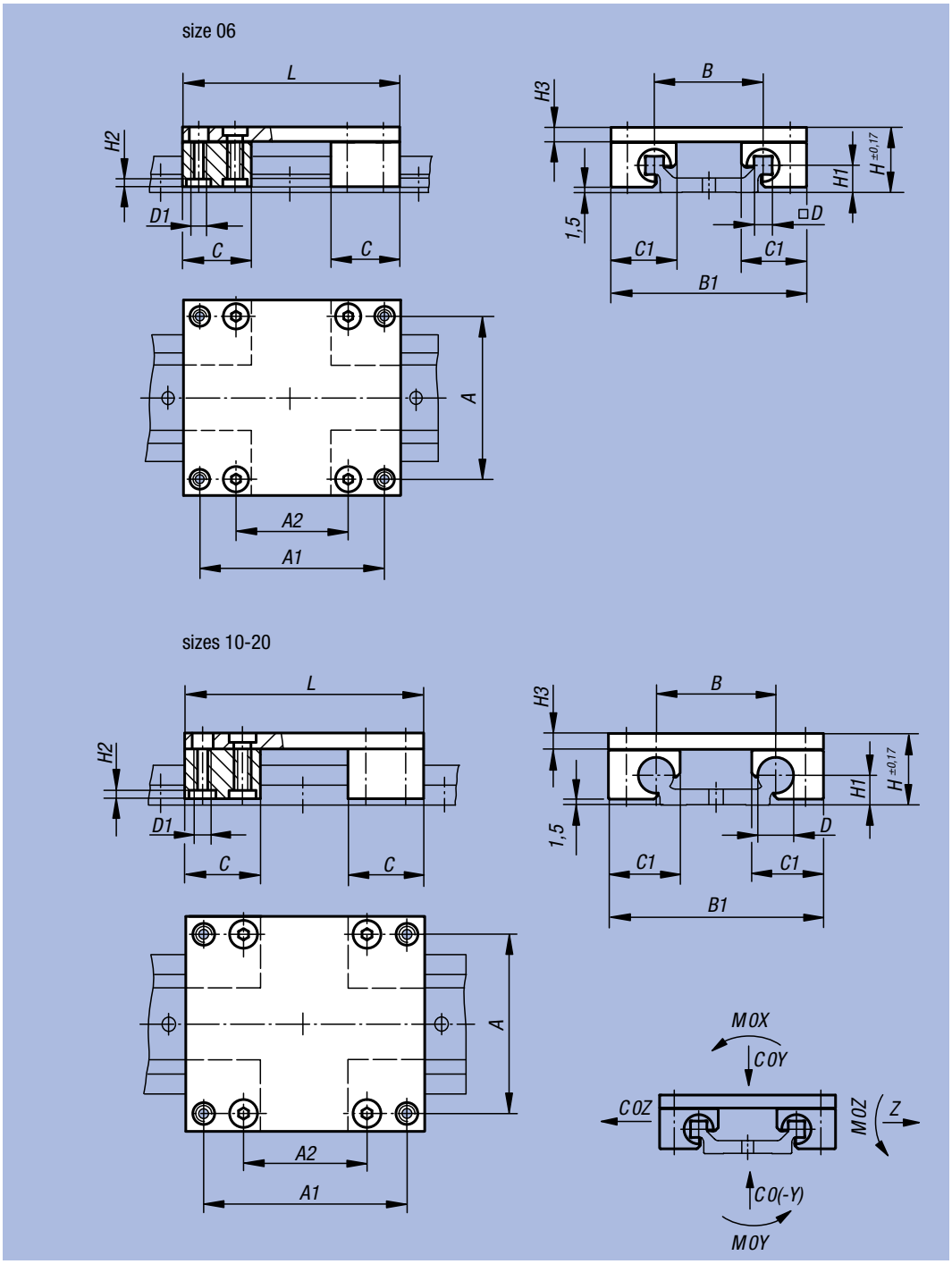

Order No.	Size	A	A1	A2	B	B1	C	C1	D	D1	H	H1	H2	H3	L	C0Y kN	C0(-Y) kN	C0Z kN	M0X Nm	M0Y Nm	M0Z Nm	□ kg
21240-0600060	06	45	51	31	30	54	19	18	5	M4	18	7,5	2	4	60	1,68	1,68	1,68	25	34	34	0,100
21240-0600080	06	45	71	51	30	54	19	18	5	M4	18	7,5	2	4	80	1,68	1,68	1,68	25	51	51	0,110
21240-0600100	06	45	91	71	30	54	19	18	5	M4	18	7,5	2	4	100	1,68	1,68	1,68	25	68	68	0,120
21240-1000100	10	60	87	55	40	73	29	26	10	M6	24	9	3,5	6	100	4,8	4,8	4,8	96	170	170	0,290
21240-1000150	10	60	137	105	40	73	29	26	10	M6	24	9	3,5	6	150	4,8	4,8	4,8	96	290	290	0,340
21240-1000200	10	60	187	155	40	73	29	26	10	M6	24	9	3,5	6	200	4,8	4,8	4,8	96	410	410	0,400
21240-1600100	16	86	82	46	58	104	36	34,5	16	M8	35	14	4	8	100	8,4	8,4	8,4	240	270	270	0,710
21240-1600150	16	86	132	96	58	104	36	34,5	16	M8	35	14	4	8	150	8,4	8,4	8,4	240	480	480	0,840
21240-1600200	16	86	182	146	58	104	36	34,5	16	M8	35	14	4	8	200	8,4	8,4	8,4	240	690	690	0,970
21240-2000150	20	116	132	78	82	134	45	42,5	20	M8	44	20	4	8	150	12,8	12,8	12,8	525	670	670	1,200
21240-2000200	20	116	182	128	82	134	45	42,5	20	M8	44	20	4	8	200	12,8	12,8	12,8	525	990	990	1,300
21240-2000250	20	116	232	178	82	134	45	42,5	20	M8	44	20	4	8	250	12,8	12,8	12,8	525	1250	1250	1,500

Sliding Carriages DryLin® W



Material:
Die cast zinc;
plain bearing in Iglidur® J.

Surface finish:
Chromated

Sample order:
nlm 21240-0600

Note:
DryLin® W guide carriages are maintenance-free and corrosion-resistant. Lacking the need of lubrication makes the system highly dirt resistant. Low friction coefficients in the dry running condition and very quiet run. Ideally suited for single or dual guide rails. Speeds up to 15 m/s.
Can be used in a temperature range of -40 °C up to 90 °C.

Accessory:
Guide Rails 21240

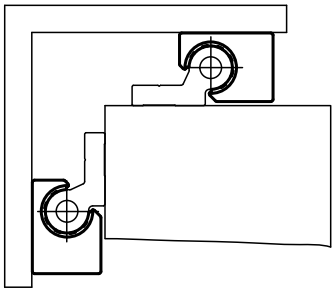

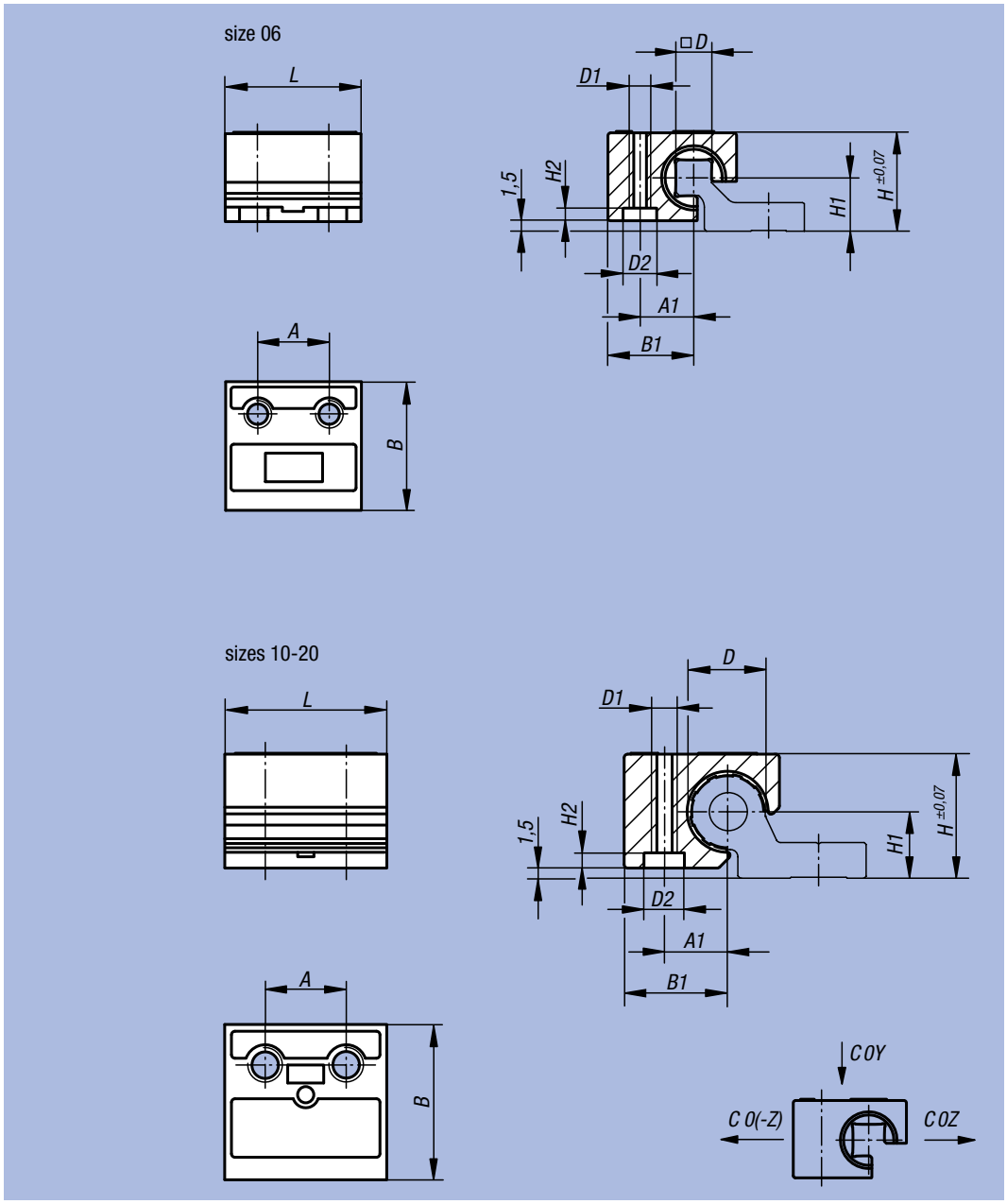

Order No.	Surface finish	Size	A	A1	B	B1	D	D1	D2	H	H1	H2	L	C0Y kN	C0Z kN	C0(-Z) kN	kg
21240-0600	fixed bearing standard	06	10	7,5	18	12	5	M4	7	14	7,5	2	19	0,42	0,42	0,14	0,016
21240-0620	floating bearing in y direction	06	10	7,5	18	12	5	M4	7	14	7,5	2	19	0,42	0,42	0,14	0,016
21240-0630	floating bearing in z direction	06	10	7,5	18	12	5	M4	7	14	7,5	2	19	0,42	0,42	0,14	0,016
21240-1000	fixed bearing standard	10	16	10	26	16,5	10	M6	9,5	18	9	3,5	29	1,2	1,2	0,25	0,041
21240-1020	floating bearing	10	16	10	26	16,5	10	M6	9,5	18	9	3,5	29	1,2	1,2	0,25	0,041
21240-1600	fixed bearing standard	16	18	14	34,5	23	16	M8	11,5	27	14	4	36	2,1	2,1	0,4	0,100
21240-2000	fixed bearing standard	20	27	17	42,5	26	20	M8	11,5	36	20	4	45	3,2	3,2	0,5	0,190
21240-2020	floating bearing	20	27	17	42,5	26	20	M8	11,5	36	20	4	45	3,2	3,2	0,5	0,190

Guide Rails DryLin® W

single



Material:
Aluminium

Surface finish:
Hard-anodized, layer thickness 50 µm; hardness 500 HV

Sample order:
nlm 21240-10630X3000 (L max.)
nlm 21240-10620X500 (per customer request: guide rail size 06)
** please indicate dimension
L2 = 20 mm
* please indicate dimension
L = 500 mm
L2 and L dimensions can only be stated in complete mm.

Note:
The single guide rail enables the highest flexibility during construction, as well as easy mounting. Applicable for the comparison of differences in height. Hard-anodised aluminium is used as the material for the guide rails and makes for best friction and locking results. Robust and dirt resistant, even heavy loads can be transported on them, securely and maintenance free.

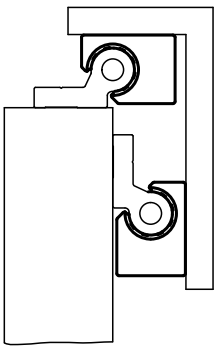

size 06

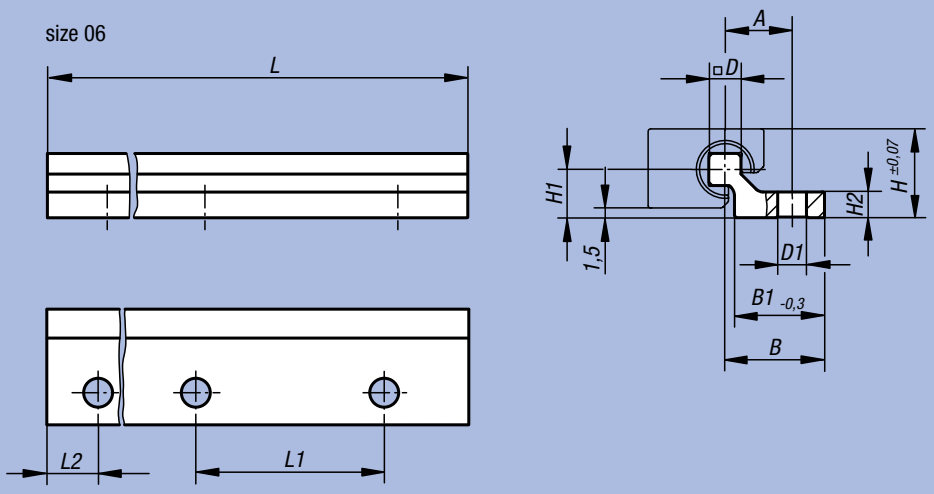

sizes 10-20

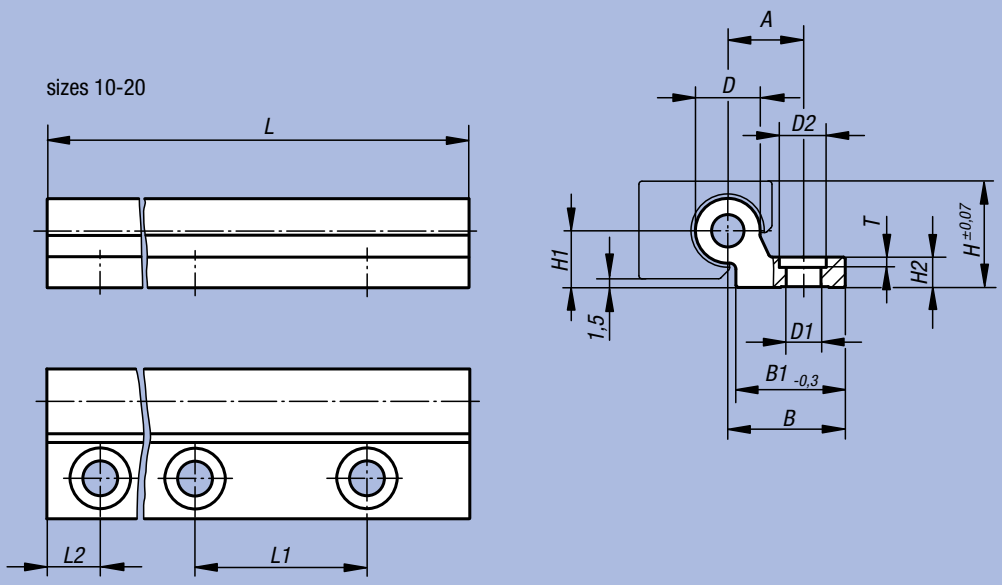

Order No.	Surface finish	Size	L max.	L2	L2 min.	L2 max.	A	B	B1	D	D1	D2	H	H1	H2	L1	T	kg/m
21240-10630X3000	L max.	06	3000	30	-	-	10,5	15,5	14	5	4,5	-	14	7,5	4	60	-	0,230
21240-11030X4000	L max.	10	4000	30	-	-	17	27	27	10	6,6	-	18	9	5,5	120	-	0,620
21240-11630X4000	L max.	16	4000	30	-	-	19	29	27	16	9	15	27	14	7,5	120	4	0,980
21240-12030X4000	L max.	20	4000	30	-	-	21	31	27	20	9	15	36	20	9,5	120	5	1,320
21240-106X***	L2 and L per customer request	06	*	**	20	49,5	10,5	15,5	14	5	4,5	-	14	7,5	4	60	-	0,230
21240-110X***	L2 and L per customer request	10	*	**	20	79,5	17	27	27	10	6,6	-	18	9	5,5	120	-	0,620
21240-116X***	L2 and L per customer request	16	*	**	20	79,5	19	29	27	16	9	15	27	14	7,5	120	4	0,980
21240-120X***	L2 and L per customer request	20	*	**	20	79,5	21	31	27	20	9	15	36	20	9,5	120	5	1,320

Guide Rails DryLin® W

double



Material:
Aluminium

Surface finish:
Hard-anodized, layer thickness 50 µm; hardness 500 HV

Sample order:
nlm 21240-20630X3000 (L max.)
nlm 21240-20620X500 (per customer request: guide rail size 06)
** please indicate dimension
L2 = 20 mm
* please indicate dimension
L = 500 mm
L2 and L dimensions can only be stated in complete mm.

Note:
Extremely flat guide rails with wide guides reaching to the edge for optimal support of high torque. Robust and dirt resistant, even heavy loads can be moved on them, securely and maintenance free.

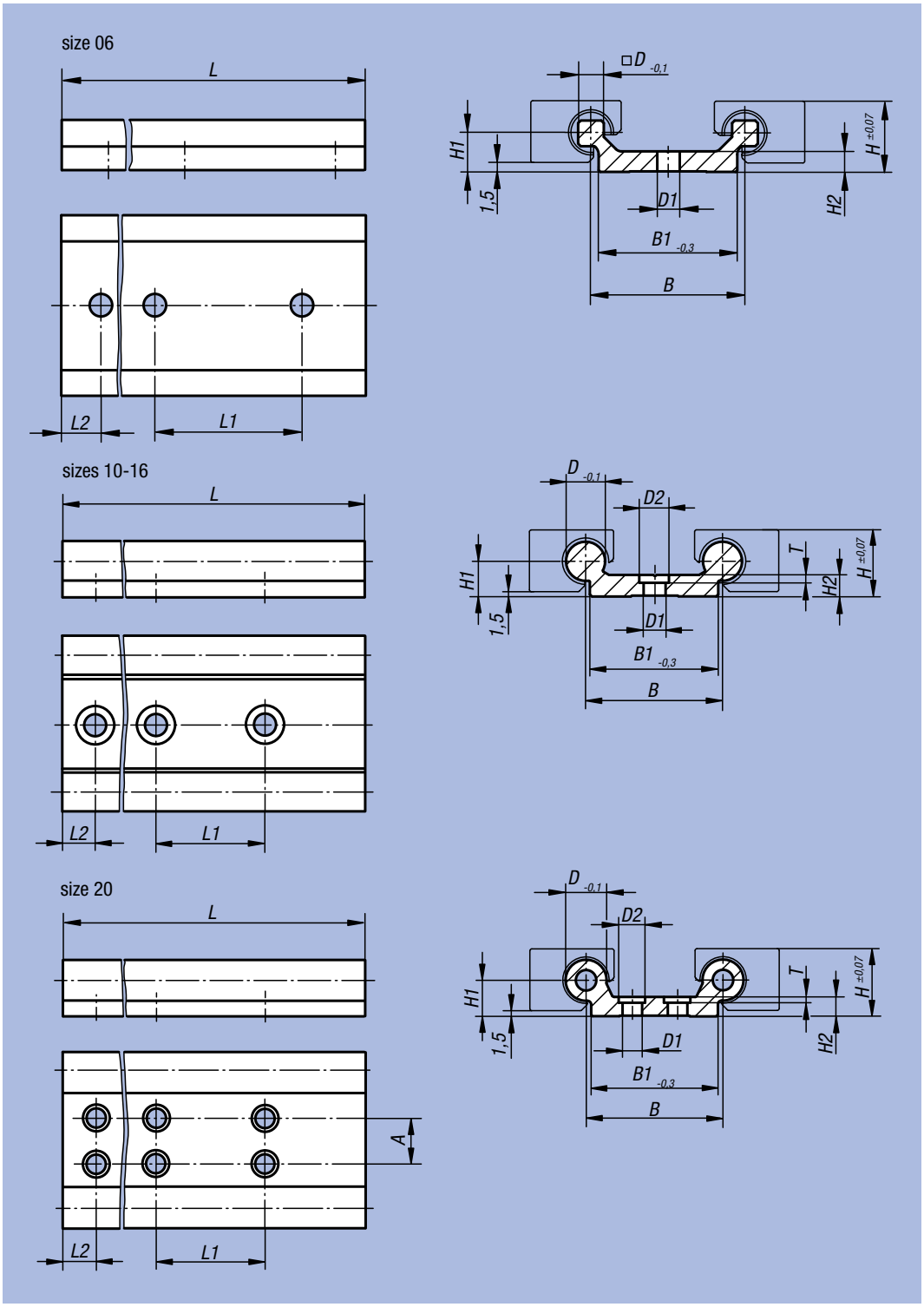

Order No.	Surface finish	Size	L max.	L2	L2 min.	L2 max.	A	B	B1	D	D1	D2	H	H1	H2	L1	T	□ kg/m
21240-20630X3000	L max.	06	3000	30	-	-	-	30	27	5	4,5	-	14	7,5	4	60	-	0,450
21240-21030X4000	L max.	10	4000	30	-	-	-	40	40	10	6,6	-	18	9	5,5	120	-	1,000
21240-21630X4000	L max.	16	4000	30	-	-	-	58	54	16	9	15	27	14	7,5	120	4	1,960
21240-22030X4000	L max.	20	4000	30	-	-	40	82	74	20	9	15	36	20	9,5	120	5	3,300
21240-206**X*	L2 and L per customer request	06	*	**	20	49,5	-	30	27	5	4,5	-	14	7,5	4	60	-	0,450
21240-210**X*	L2 and L per customer request	10	*	**	20	79,5	-	40	40	10	6,6	-	18	9	5,5	120	-	1,000
21240-216**X*	L2 and L per customer request	16	*	**	20	79,5	-	58	54	16	9	15	27	14	7,5	120	4	1,960
21240-220**X*	L2 and L per customer request	20	*	**	20	79,5	40	82	74	20	9	15	36	20	9,5	120	5	3,300

Roller carriage

compact and heavy-duty model



Material:
Steel

Surface finish:
Galvanized

Sample order:
nlm 21320-120080

Note:
Roller carriage with low coefficient of friction, therefore very free-running. The roller journals are lifetime-lubricated and have a 2Z (dust cover) seal. By simply moving the centre cam roller, the roller carriage can adjusted to be play-free or under the desired initial tension in the rail. The compact module has a plastic stripper for cleaning the tracks.

Application temperature
-30 °C to +120 °C.

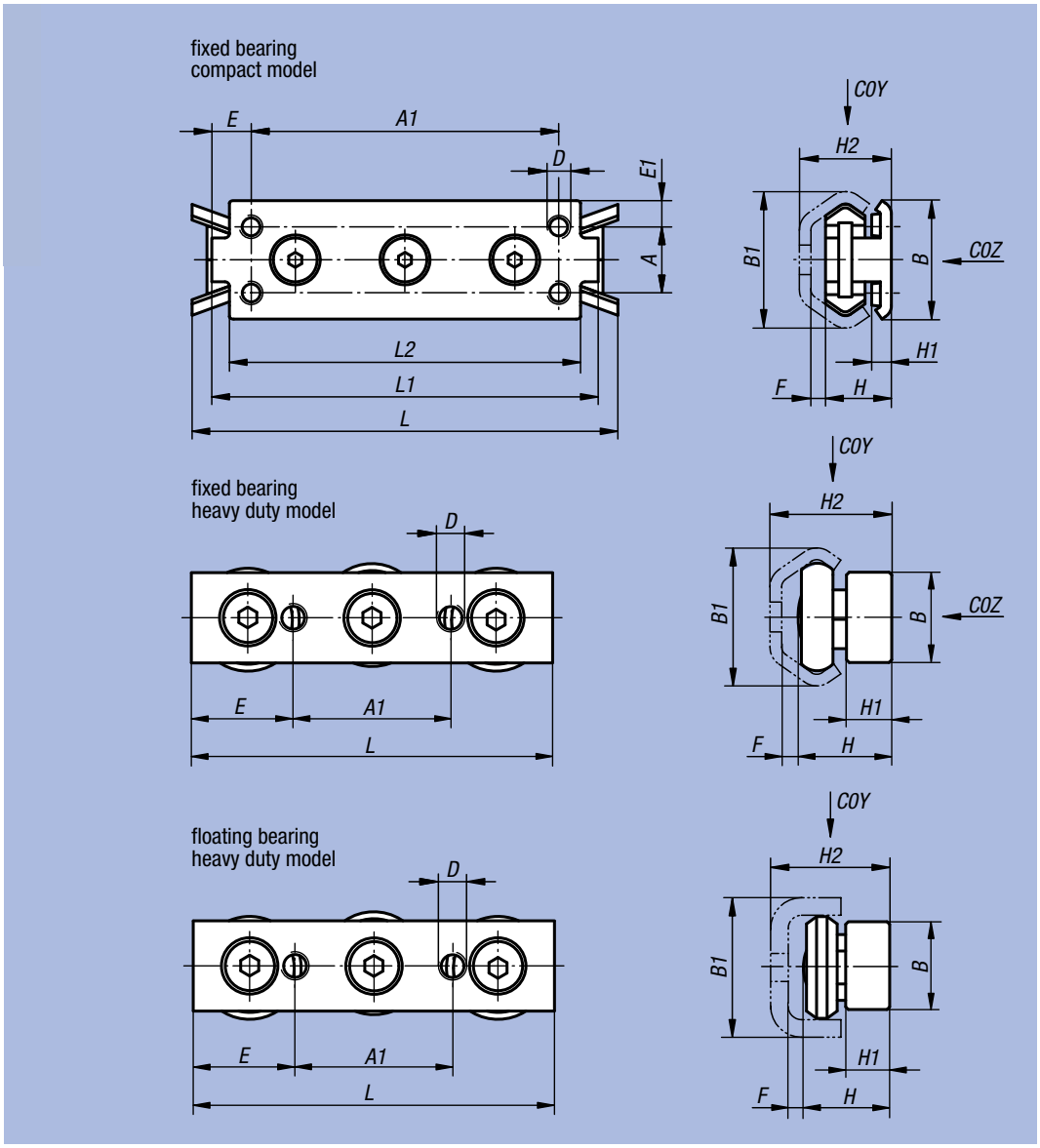

Fixed bearing, compact model

Order No.	Size	A	A1	B	B1	D	E	E1	F	H	H1	H2	L	L1	L2	C0Y N	C0Z N	kg
21320-120080	20	-	60	18	19,2	M5	10	9	3	11,5	5,5	16	90	80	71	300	170	0,050
21320-130088	30	15	70	27	29,5	M5	5	6	4	15	4,5	20,5	97	88	80	800	400	0,110
21320-145150	45	23	120	40	46,4	M6	7,5	8,5	5	22	4	31	160	150	135	1600	860	0,400

Fixed bearing, heavy-duty model

Order No.	Size	A1	B	B1	D	E	F	H	H1	H2	L	C0Y N	C0Z N	kg
21320-220060	20	20	10	19,2	M5	20	2,6	13	6	17,8	60	326	185	0,040
21320-230080	30	35	20	29,5	M6	22,5	3,3	20,7	10	26,5	80	870	435	0,170
21320-245120	45	55	25	46,4	M8	32,5	5,1	28,9	12	38	120	1740	935	0,470

Floating bearing, heavy-duty model

Order No.	Size	A1	B	B1	D	E	F	H	H1	H2	L	C0Y N	kg
21320-320060	20	20	10	20,5	M5	20	2,5	11,55	6	18,25±0,6	60	300	0,040
21320-330080	30	35	20	31,8	M6	22,5	3,5	19,2	10	27,95±1,0	80	800	0,160
21320-345120	45	55	25	44,8	M8	32,5	5	25,5	12	37,25±1,75	120	1600	0,450

Roller Guide Rails



Material:
Steel

Surface finish:
Galvanized

Sample order:
nlm 21320-120X800
(please also indicate dimension L)

Note:
Stamped and rolled guide rails.

The fixed bearing rail is the main absorber of radial and axial forces. The floating bearing rail serves to absorb the load of radial forces and, in combination with the fixed bearing rail, as a support bearing for absorbing torques that occur. In the connection of the fixed and the floating bearings, the floating bearing rail compensates for parallelism errors and tolerances.

On request:
Lengths up to a max. 3120 mm.

Roller guide rail for fixed bearing

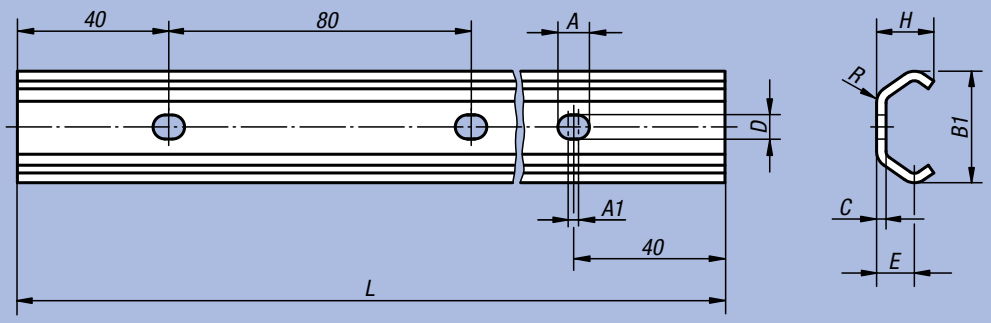

Roller guide rail for floating bearing

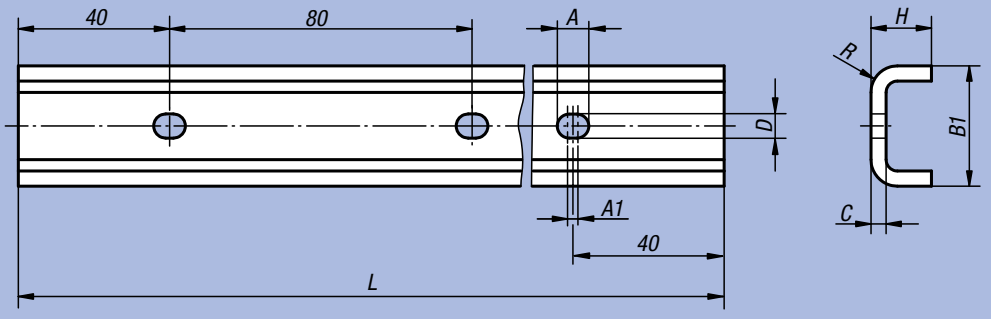

fastening screw

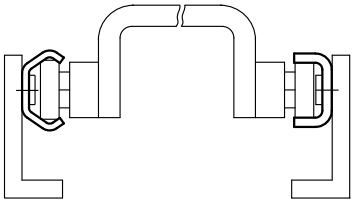

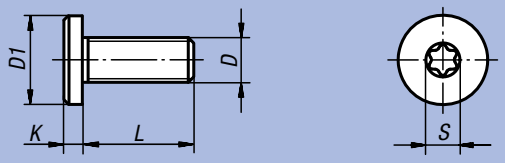

Roller guide rails for fixed bearing

Order No.	Size	A	A1	B1	C	D	E	H	L	R	kg/m
21320-120X	20	7	2	19,2	2	5	7	10	800 / 1040 / 2080 / 3120	3	0,470
21320-130X	30	8,4	2	29,5	2,5	6,4	10	15	800 / 1040 / 2080 / 3120	4,5	0,900
21320-145X	45	11	2	46,4	4	7,5	15,5	24	800 / 1040 / 2080 / 3120	6,5	2,290

Roller guide rails for floating bearing

Order No.	Size	A	A1	B1	C	D	H	L	R	kg/m
21320-220X	20	7	2	20,5	3	5	11	800 / 1040 / 2080 / 3120	5,5	0,770
21320-230X	30	8,4	2	31,8	4	6,4	16	800 / 1040 / 2080 / 3120	7	1,390
21320-245X	45	11	2	44,8	4,5	9	24,5	800 / 1040 / 2080 / 3120	9,5	2,790

Fastening screw

Order No.	D	D1	K	L	S	Suitable for	Tightening torque Nm
21320-0408	M4	8	2	8	T20	size 20	4
21320-0510	M5	10	2	10	T25	size 30	9
21320-0816	M8	16	3	16	T40	size 45	22

Roller carriage

in steel



Material:
Slide body, steel;
stripper, modified polyamide;
rollers, steel type 1.3505

Surface finish:
Slide body, galvanized

Sample order:
nlm 21322-1128080

Note:
Roller carriage with lifetime-lubricated roller bearings and polyamide strippers that protect the tracks from contamination.
By simply moving the centre cam roller, the roller carriage can adjusted to be play-free or under the desired initial tension in the rail.
High traversing speeds up to 7 m/s and extremely low-noise (faster and quieter than systems with ball-bearing guides).

Application temperature
-30 °C to +120 °C.

On request:
Roller carriage with 4 or 5 rollers.

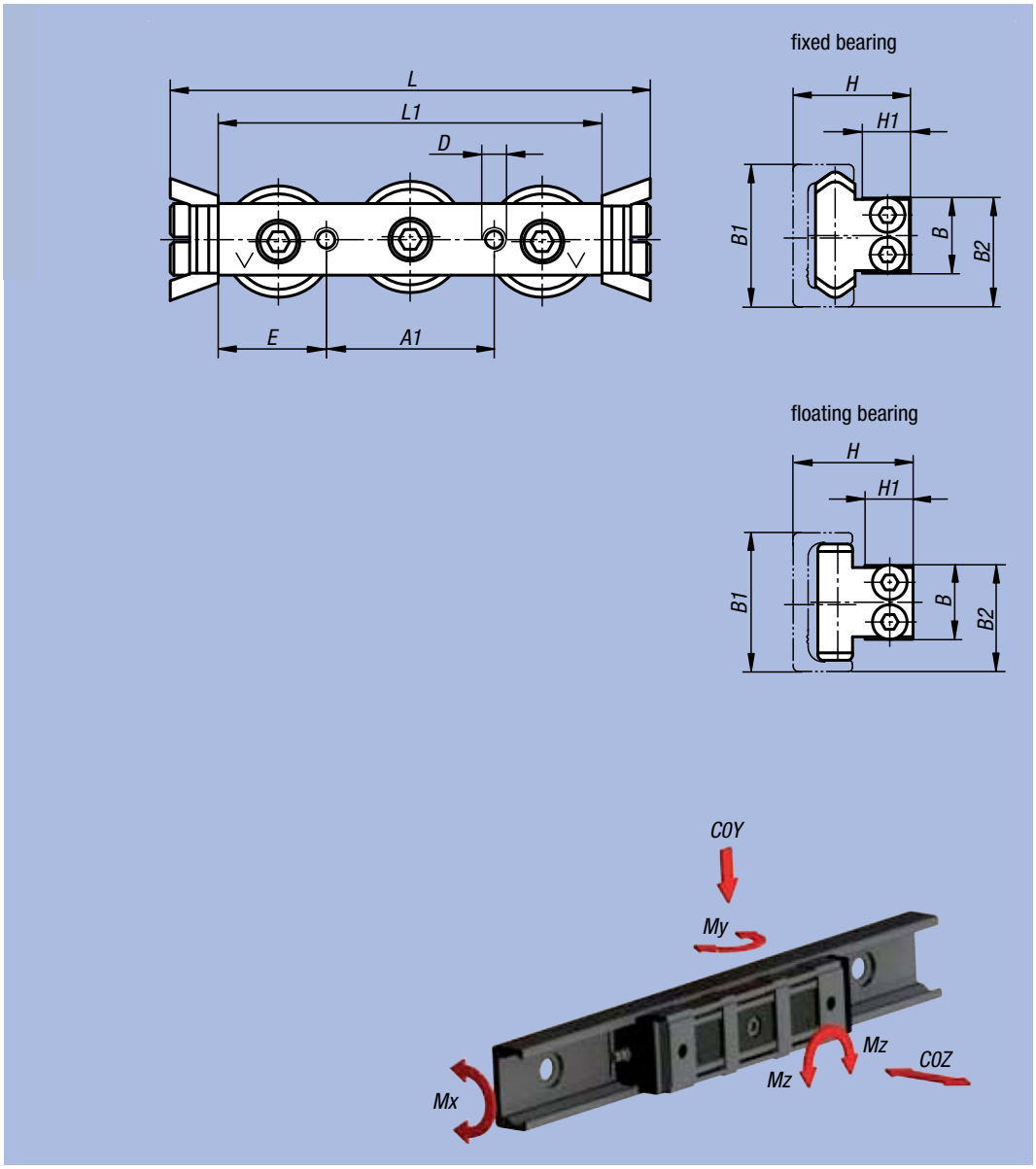

Fixed bearing

Order No.	Size	A1	B	B1	B2	D	E	H	H1	L	L1	C dynamic N	C0Y N	C0Z N	Mx Nm	My Nm	Mz Nm	kg
21322-1128080	28	35	14,9	28	21,7	M5	22,5	23,9	9,7	100	80	4260	2170	640	6,2	16	27,2	0,155
21322-1143120	43	55	24,9	43	34,3	M8	32,5	37	14,5	140	120	12280	5500	1570	23,6	60	104,5	0,530

Floating bearing

Order No.	Size	A1	B	B1	B2	D	E	H min.	H max.	H1	L	L1	C dynamic N	C0Y N	Mz Nm	kg
21322-1228080	28	35	14,9	28	21,7	M5	22,5	23,3	25,2	9,7	100	80	4260	2170	27,2	0,155
21322-1243120	43	55	24,9	43	34,3	M8	32,5	35,6	39,5	14,5	140	120	12280	5500	104,5	0,530

Roller carriage

in aluminium



Material:
Slide body, pressure-cast aluminium;
heads polyester, strippers modified polyamide;
longitudinal sealing lips rubber;
rollers, steel type 1.3505

Surface finish:
Slide body nickel-plated

Sample order:
nlm 21322-2128088

Note:
Roller carriage with lifetime-lubricated roller bearing and patented stripper technology, by which the system is lubricated while in motion.
By simply moving the centre cam roller, the roller carriage can adjusted to be play-free or under the desired initial tension in the rail.
High traversing speeds up to 7 m/s and extremely low-noise (faster and quieter than systems with ball-bearing guides).

Application temperature
-30 °C to +120 °C.

On request:
Roller carriage with 4 or 5 rollers.

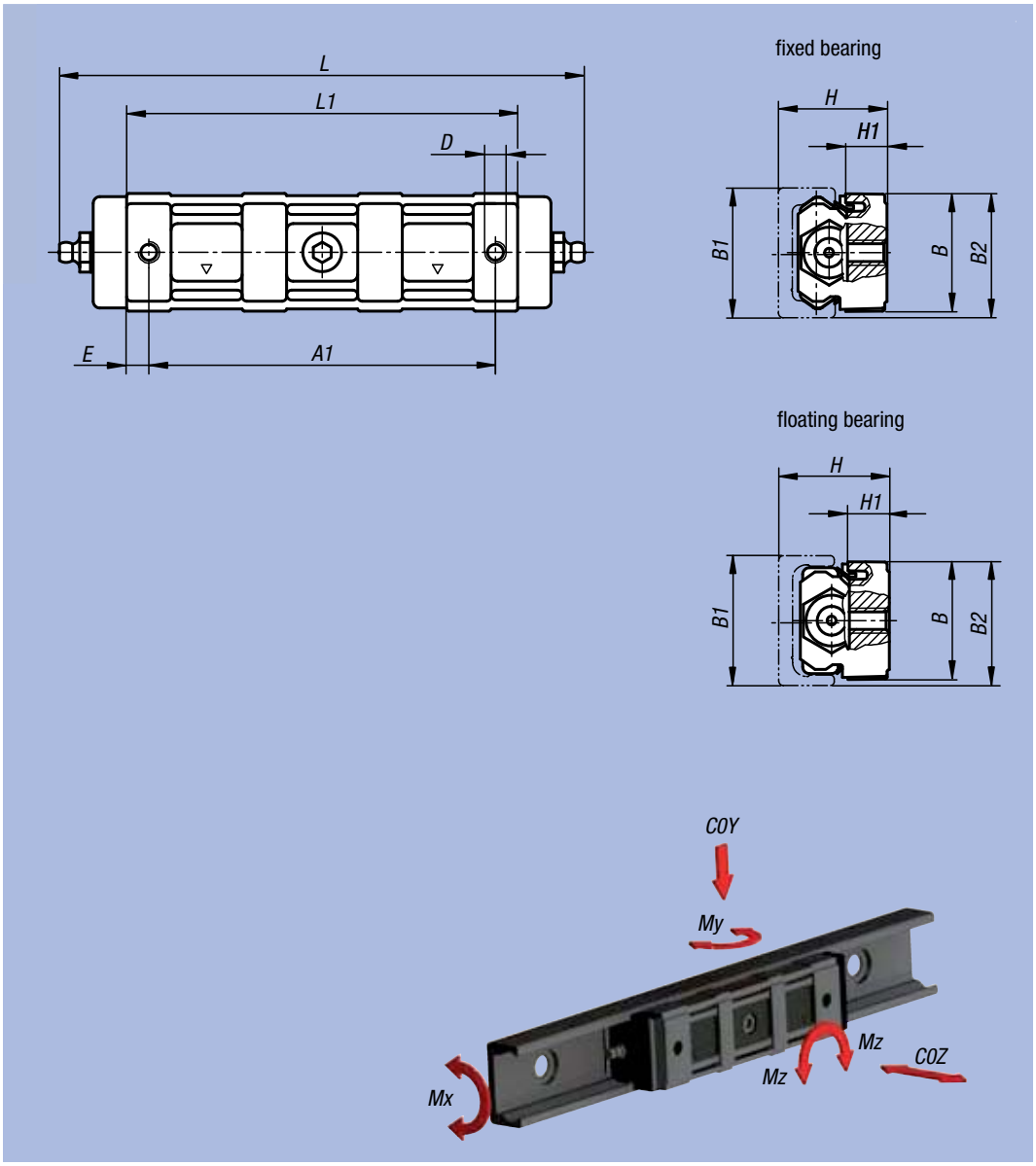

Fixed bearing

Order No.	Size	A1	B	B1	B2	D	E	H	H1	L	L1	C dynamic N	C0Y N	C0Z N	Mx Nm	My Nm	Mz Nm	kg
21322-2128088	28	78	26,5	28	28	M5	5	24	9,3	124	88	4260	2170	640	6,2	16	27,2	0,115
21322-2143134	43	114	41	43	42,7	M8	10	37	13,7	170	134	12280	5500	1570	23,6	60	104,5	0,385

Floating bearing

Order No.	Size	A1	B	B1	B2	D	E	H min.	H max.	H1	L	L1	C dynamic N	C0Y N	Mz Nm	kg
21322-2228088	28	78	26,5	28	28	M5	5	24	25,3	9,3	124	88	4260	2170	27,2	0,115
21322-2243134	43	114	41	43	42,7	M8	10	37	39,5	13,7	170	134	12280	5500	104,5	0,385

Roller Guide Rails



Material:
Roller bearing steel

Surface finish:
Galvanized; tracks inductively hardened and ground

Sample order:
nlm 21322-128X400
(please also indicate dimension L)

Note:
Compact C-profile guide rails with internal hardened tracks. The system runs with low noise even under heavy loads.

The rail can be aligned during assembly because of a play of the screw in the borehole.

In order to achieve the desired running properties, there must always be a film of lubricant between track and roller, which also provides corrosion protection for the polished tracks.

On request:
Lengths up to a max. 4080 mm.

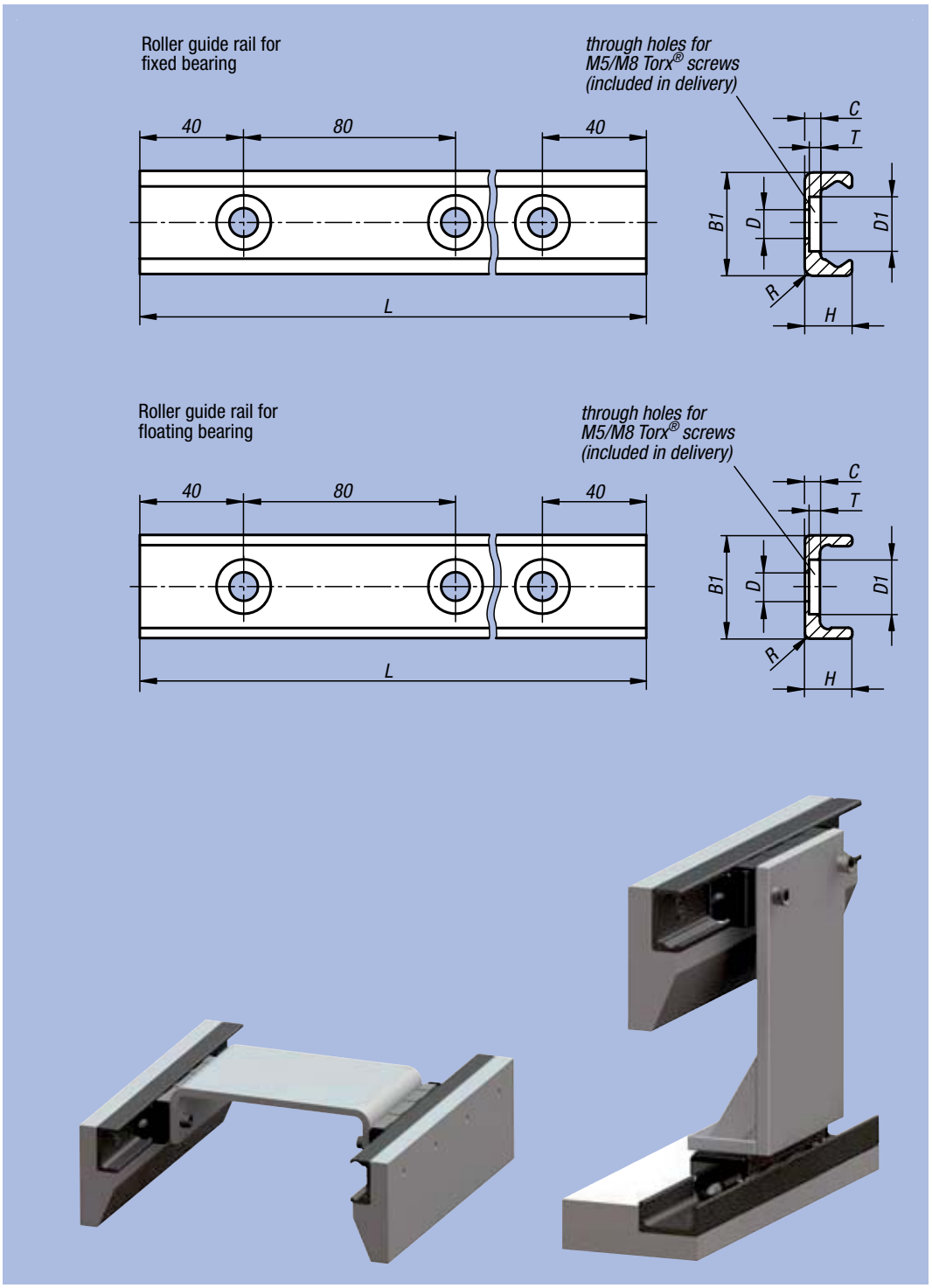

Roller guide rails for fixed bearing

Order No.	Size	B1	C	D	D1	H	L	R	T	□ kg/m
21322-128X	28	28	3	6,4	11	12,25	400 / 560 / 800 / 1040 / 1200	1	2	1,000
21322-143X	43	43	4,5	10,5	18	21	400 / 560 / 800 / 1040 / 1200	2,5	3,1	2,600

Roller guide rails for floating bearing

Order No.	Size	B1	C	D	D1	H	L	R	T	□ kg/m
21322-228X	28	28	3	6,4	11	12	400 / 560 / 800 / 1040 / 1200	1	2	1,000
21322-243X	43	43	4,5	10,5	18	21	400 / 560 / 800 / 1040 / 1200	1	3,1	2,600

Telescoping rails



Material:
Roller and slide, roller bearing steel; balls, roller bearing steel

Surface finish:
Roller and slide galvanized; tracks inductively hardened; balls hardened

Sample order:
nlm 21340-280290

Note:
Partial extension consisting of a fixed guide rail and a movable slider. The slide can move somewhat more than half the length of the rail (C stroke). By removing the locking screw, a partial extension with the stroke length C is possible on both sides. The total stroke is thus 2C (stroke).
This compact and simple construction allows very high load ratings.
The maximum traversing speed is 0.8 m/s.

Application temperature
-30 °C to +170 °C.

On request:
Other lengths (pitch 80 mm).
Size 28 up to a max. 1170 mm.
Size 35 up to a max. 1490 mm.
Size 43 up to a max. 1970 mm.

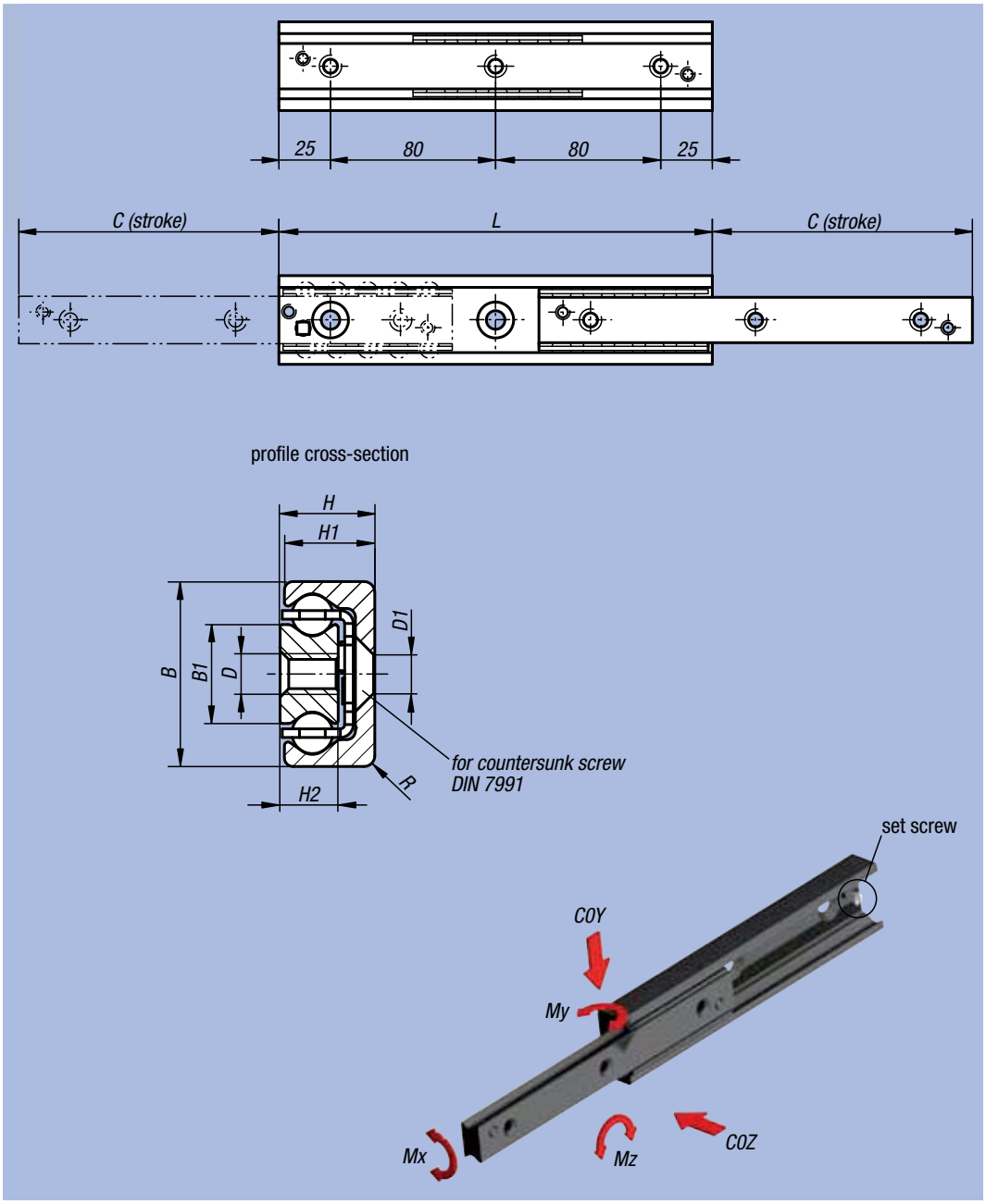

Order No.	Size	B	B1	C (stroke)	D	D1	H	H1	H2	L	R	C0Y N	C0Z N	Mx Nm	My Nm	Mz Nm	Number of holes	kg/m
21340-280290	28	28	15	148	M5	M5	13	12,25	7,5	290	1	1934	1345	39,6	132	188	4	2,020
21340-280370	28	28	15	190	M5	M5	13	12,25	7,5	370	1	2445	1711	50,4	213	305	5	2,020
21340-280450	28	28	15	232	M5	M5	13	12,25	7,5	450	1	2955	2069	61,2	314	449	6	2,020
21340-280530	28	28	15	274	M5	M5	13	12,25	7,5	530	1	3466	2426	72	435	621	7	2,020
21340-280610	28	28	15	315	M5	M5	13	12,25	7,5	610	1	3986	2790	82,8	575	821	8	2,020
21340-350290	35	35	15,8	159	M6	M6	17	16	10	290	2	2060	1442	46,9	146	208	4	3,050
21340-350370	35	35	15,8	203	M6	M6	17	16	10	370	2	2638	1847	59,9	238	340	5	3,050
21340-350450	35	35	15,8	247	M6	M6	17	16	10	450	2	3217	2252	73	345	505	6	3,050
21340-350530	35	35	15,8	279	M6	M6	17	16	10	530	2	4282	2997	90,4	543	775	7	3,050
21340-350610	35	35	15,8	323	M6	M6	17	16	10	610	2	4858	3401	103,5	711	1015	8	3,050
21340-430290	43	43	23	158	M8	M8	22	21	13,5	290	2,5	2872	2010	93,8	201	288	4	5,250
21340-430370	43	43	23	208	M8	M8	22	21	13,5	370	2,5	3377	2364	115,9	308	440	5	5,250
21340-430450	43	43	23	243	M8	M8	22	21	13,5	450	2,5	4690	3283	149,2	509	728	6	5,250
21340-430530	43	43	23	278	M8	M8	22	21	13,5	530	2,5	6039	4227	182,4	762	1088	7	5,250
21340-430610	43	43	23	313	M8	M8	22	21	13,5	610	2,5	7411	5188	215,6	1064	1521	8	5,250

Telescoping rails

S-shape



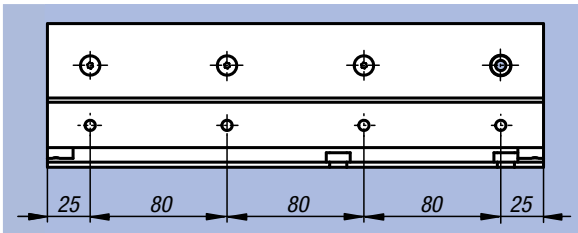

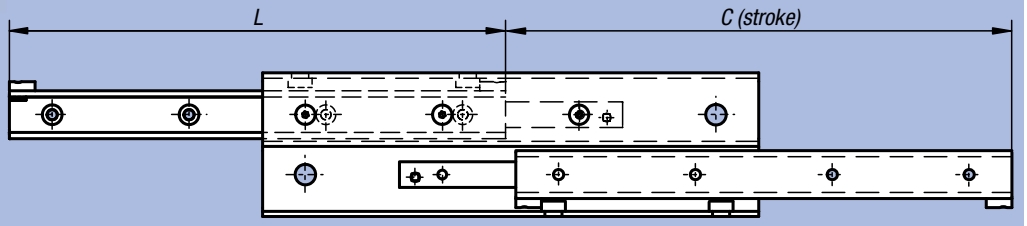

profile cross-section

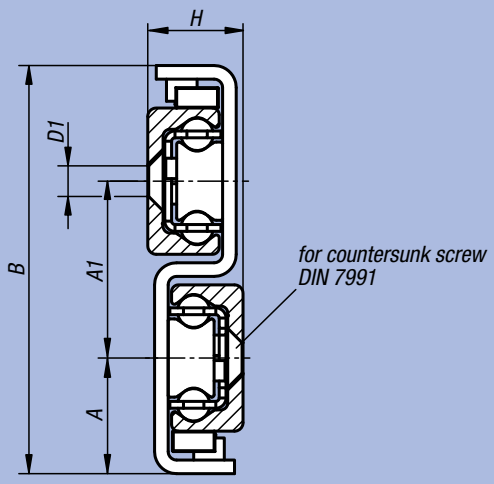

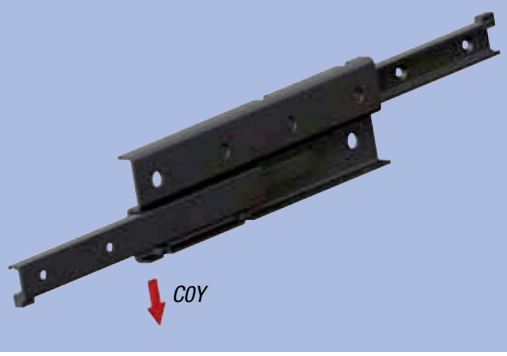

Material:
Roller and slide, roller bearing steel; balls, roller bearing steel

Surface finish:
Roller and slide galvanized; tracks inductively hardened; balls hardened

Sample order:
nlm 21342-280290

Note:
Full extension consisting of two guide rails as fixed and moving elements and an S-shaped intermediate element. The latter has a high axial angular impulse and high rigidity with a slim construction. This results in a high load rating with a low amount of bending in the extended state. The maximum stroke is greater than the closed length of the telescoping rail.
The maximum traversing speed is 0.8 m/s.

Application temperature
-30 °C to +110 °C.

On request:
Other lengths (pitch 80 mm).
Size 28 up to a max. 1490 mm.
Size 43 up to a max. 1970 mm.

Order No.	Size	A	A1	B	C (stroke)	D1	H	L	C0Y N	Number of holes	kg/m
21342-280290	28	24,5	36	85	296	M5	17	290	570	4 (3 accessible)	6,400
21342-280370	28	24,5	36	85	380	M5	17	370	769	5 (4 accessible)	6,400
21342-280450	28	24,5	36	85	464	M5	17	450	969	6 (4 accessible)	6,400
21342-280530	28	24,5	36	85	548	M5	17	530	1170	7 (6 accessible)	6,400
21342-280610	28	24,5	36	85	630	M5	17	610	1376	8 (6 accessible)	6,400
21342-430530	43	34	52	120	556	M8	28	530	2061	7 (6 accessible)	14,600
21342-430610	43	34	52	120	626	M8	28	610	2603	8 (6 accessible)	14,600
21342-430690	43	34	52	120	726	M8	28	690	2775	9 (7 accessible)	14,600
21342-430770	43	34	52	120	796	M8	28	770	3319	10 (7 accessible)	14,600
21342-430850	43	34	52	120	866	M8	28	850	3873	11 (9 accessible)	14,600

Technical Information for Profile Guide Rails

A profile guide rail makes a linear motion with the aid of balls possible. Through the use of balls between rails and run carriages, a profile guide rail can attain an extremely precise linear motion. Compared to a conventional slip-in guide, the coefficient of friction achieved in so doing adds up to just a fiftieth.

Because of the ball array alignment based on two-point contact with four ball arrays always at a 45° contact angle, the profile guide rail has consistent load ratings in all primary directions of load with excellent antifrictional qualities. The profile guide rail can thus be employed in various assembly positions for the most diverse applications.

Profile guide rails of the same size are exchangeable among one another. As a result, individual carriages or rails can be exchanged or added to at any time. Our profile guide rails correspond to the market standard and can replace linear guides of the same design by other manufacturers.

Accuracy Classes
Profile guide rails are available in three accuracy classes. The maximum relative tolerance of each accuracy class is specified.

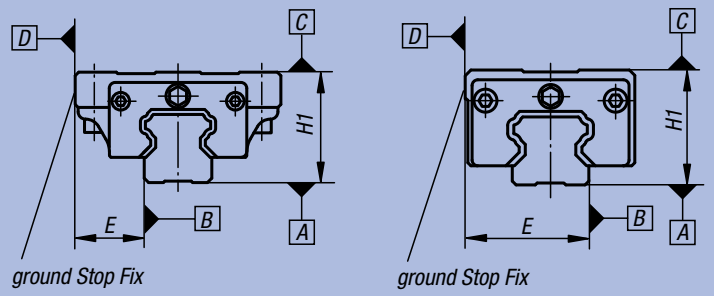

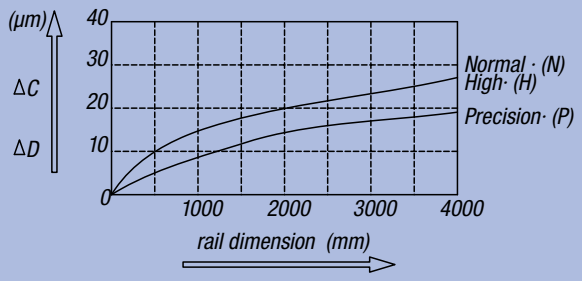

		Accuracy Class		
		Normal (N)	High (H)	Precision (P)
maximum deviation for systems with one carriage	height tolerance H1	±0,1	±0,04	-0,04
	tolerances of lengths E	±0,1	±0,04	-0,04
maximum deviation for systems with several carriages	Δ H1	0,03	0,02	0,01
	Δ E	0,03	0,02	0,01
run parallelism of the surface C in terms of the surface A		see diagram		
run parallelism of the surface D in terms of the surface B		see diagram		

Pretensioning Classes
In view of the diverse needs of the user, profile guide rails are available in four different pretensioning classes. A higher pretensioning improves the rigidity and reduces the elastic deformation upon load alternations.

Class	Pretensioning	Pretensioning force	Application in	Application Examples
Z0	without pretensioning	0	- constant direction of load - imprecise assembly surfaces	- linear motion slides - sliding and pulling devices
Z1	light pretensioning	0,02 C (C = dynamic load rating)	- constant direction of load - minor jolts and vibrations - minor loads	- graving machines - packaging machines - industrial handling
Z2	average pretensioning	0,05 C (C = dynamic load rating)	- high accuracy required - torque load	- positioning units - fast feeding units - metrology
Z3	heavy pretensioning	0,07 C (C = dynamic load rating)	- high requisite rigidity - jolts and vibrations - heavy loads	- processing centres - grinders - large horizontal boring machines

Assessment of the Lifespan
The nominal lifespan L can be calculated per the following formula:

$$L = \left(\frac{C_{dyn}}{P} \right)^3 \cdot 50000 \text{ m}$$

L = nominal lifespan (m)
C_{dyn} = dynamic load rating (N)
P = dynamically equivalent load (N)

Carriages



Material:
Body in tempered steel
Balls, roller bearing steel.
Diverters, plastic.

Surface finish:
Natural finish

Sample order:
nlm 21400-15106601

Note:
Standard carriage with revolving ball guidance according to accuracy N without pre-stressing (Z0). With double-sided close-off seal. 4-row models with round arch profile. The tracks of the profile guide rails are set below an angle of 45° and thus can carry loads from all directions.

High dynamic values: v = 5 m/s.

Application temperature in continuous operation at max. 80 °C.

On request:
Various accuracies and pre-stressing classes available.

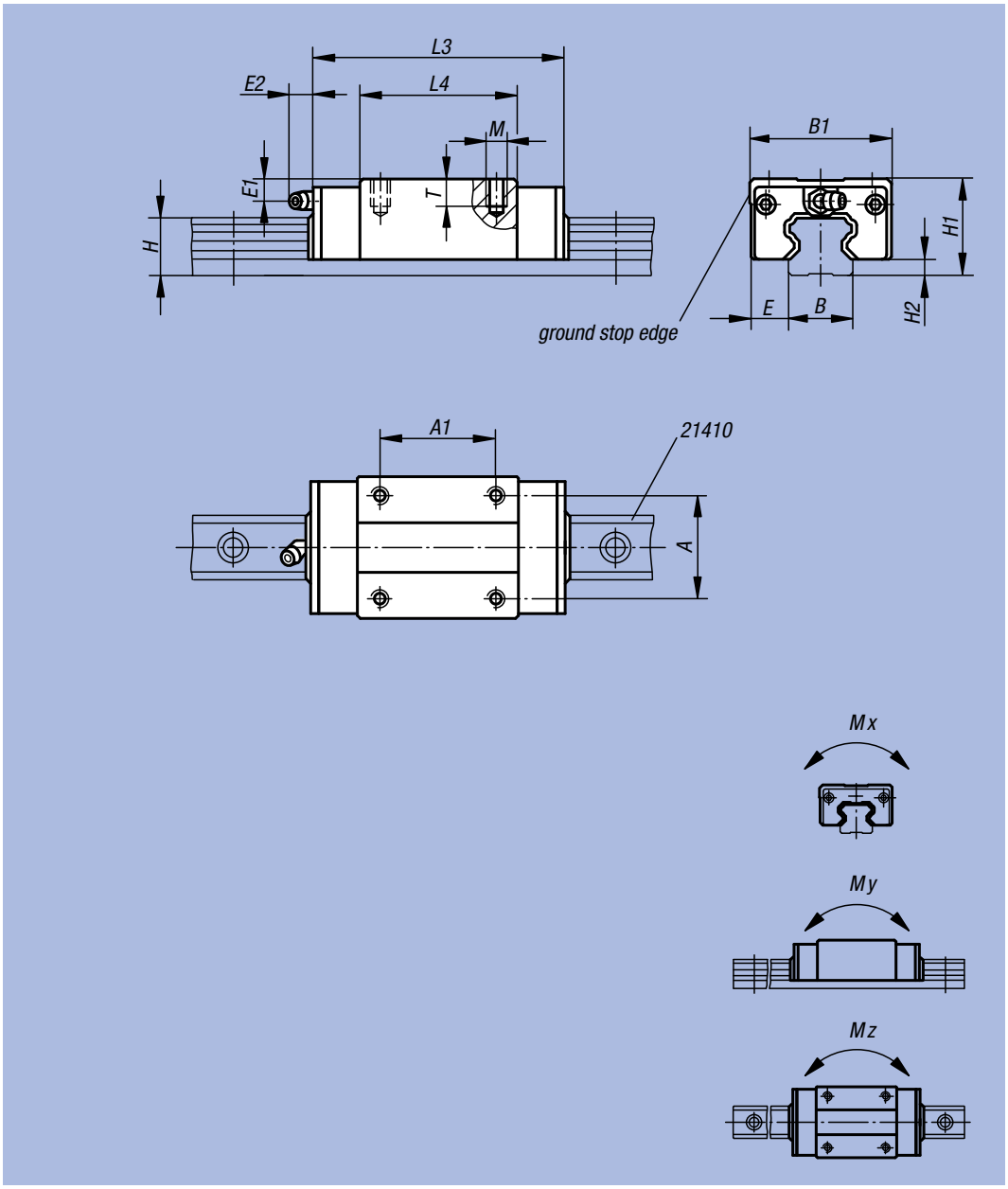

Order No.	Surface finish	Size	Mx Nm	My Nm	Mz Nm	Dynamic base loads N	Static base loads N	Lubrication hole
21400-15106601	standard	15	70	50	50	6850	12700	Ø3
21400-20107801	standard	20	220	180	180	14500	25600	M6x1
21400-25108801	standard	25	360	320	310	21400	40000	M6x1
21400-30110901	standard	30	600	500	490	29800	54900	M6x1
21400-25211001	long	25	504	448	434	29960	56000	M6x1
21400-30213101	long	30	785	650	650	39000	71900	M6x1

Order No.	Surface finish	Size	A	A1	B	B1	E	E1	E2	H	H1	H2	L3	L4	M	T	kg
21400-15106601	standard	15	26	26	15	34	9,5	8,3	5	14	28	4,6	66	40	M4	6,4	0,210
21400-20107801	standard	20	32	36	20	44	12	7	13,5	18	30	5	77,8	48,8	M5	8	0,310
21400-25108801	standard	25	35	35	23	48	12,5	11	13,5	22	40	7	88	57	M6	9,6	0,450
21400-30110901	standard	30	40	40	28	60	16	10	13	26	45	9	109	72	M8	12,8	0,910
21400-25211001	long	25	35	50	23	48	12,5	11	13,5	22	40	7	110,1	79,1	M6	9,6	0,560
21400-30213101	long	30	40	60	28	60	16	10	13	26	45	9	131,3	94,3	M8	12,8	1,200

Carriages

with flange



Material:
Body in tempered steel
Balls, roller bearing steel.
Diverters, plastic.

Surface finish:
Natural finish

Sample order:
nlm 21402-15106601

Note:
Standard carriage with flange with revolving ball guidance according to accuracy N without pre-stressing (Z0). With double-sided close-off seal. 4-row models with round arch profile. The tracks of the profile guide rails are set below an angle of 45° and thus can carry loads from all directions.

High dynamic values: v = 5 m/s.

Application temperature in continuous operation at max. 80 °C.

On request:
Various accuracies and pre-stressing classes available.

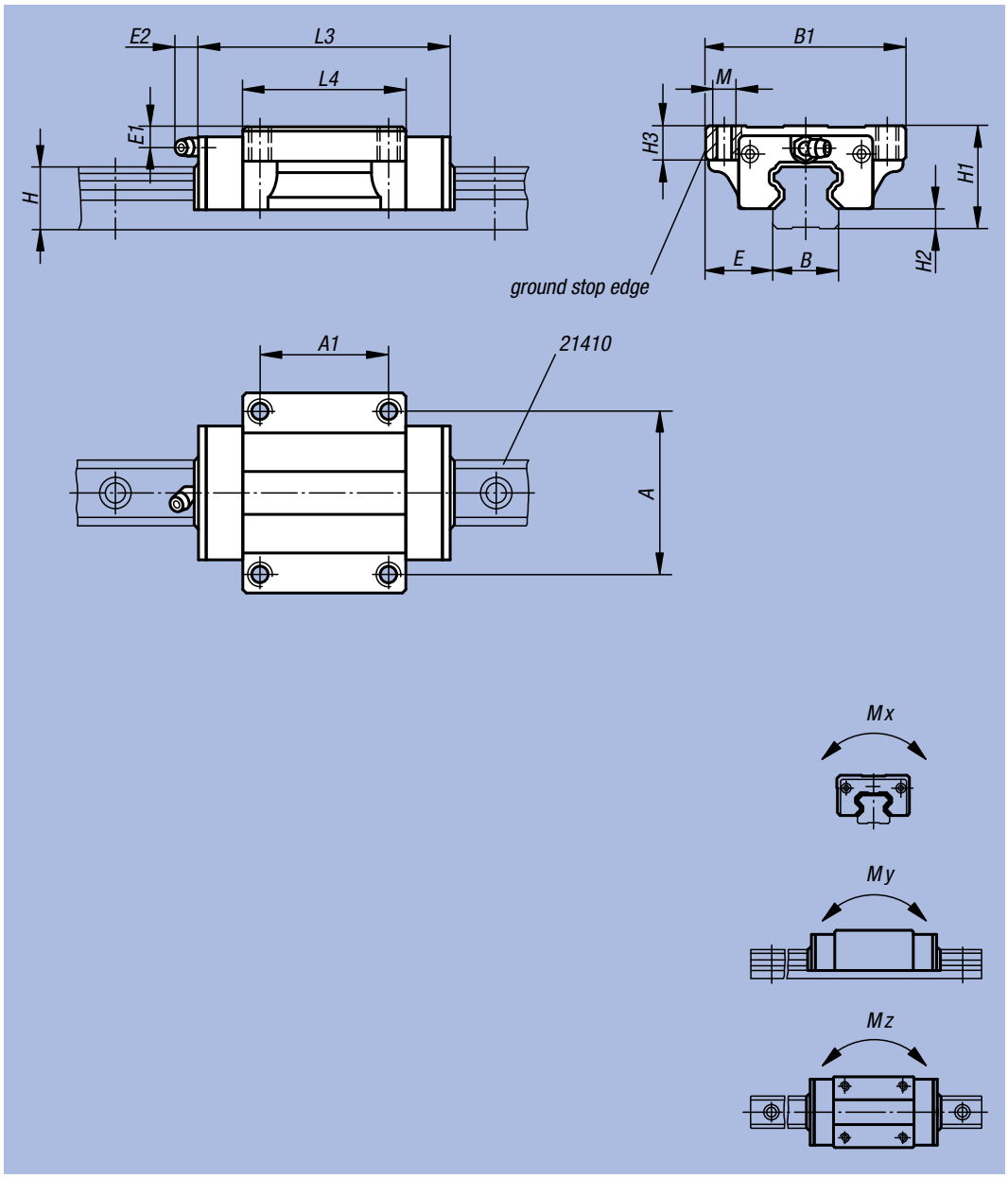

Order No.	Surface finish	Size	Mx Nm	My Nm	Mz Nm	Dynamic base loads N	Static base loads N	Lubrication hole
21402-15106601	standard	15	70	50	50	6850	12700	Ø3
21402-20107801	standard	20	220	180	180	14500	25600	M6x1
21402-25108801	standard	25	360	320	310	21400	40000	M6x1
21402-30110901	standard	30	600	500	490	29800	54900	M6x1
21402-25211001	long	25	504	448	434	29960	56000	M6x1
21402-30213101	long	30	785	650	650	39000	71900	M6x1

Order No.	Surface finish	Size	A	A1	B	B1	E	E1	E2	H	H1	H2	H3	L3	L4	M	□ kg
21402-15106601	standard	15	38	30	15	47	16	4,3	5	14	24	4,6	8	66	40	M5	0,190
21402-20107801	standard	20	53	40	20	63	21,5	5	13,5	18	30	5	9	77,8	48,8	M6	0,400
21402-25108801	standard	25	57	45	23	70	23,5	5	13,5	22	36	7	12	88	57	M8	0,570
21402-30110901	standard	30	72	52	28	90	31	7	13	26	42	9	12	109	72	M10	1,100
21402-25211001	long	25	57	45	23	70	23,5	5	13,5	22	36	7	12	110,1	79,1	M8	0,720
21402-30213101	long	30	72	52	28	90	31	7	13	26	42	9	12	131,3	94,3	M10	1,400

Compact Carriages



Material:
Body in tempered steel
Balls, roller bearing steel.
Diverters, plastic.

Surface finish:
Natural finish

Sample order:
nlm 21404-15106601

Note:
Standard carriage with revolving ball guidance according to accuracy N without pre-stressing (Z0). With double-sided close-off seal. 4-row models with round arch profile. The tracks of the profile guide rails are set below an angle of 45° and thus can carry loads from all directions.

High dynamic values: v = 5 m/s.

Application temperature in continuous operation at max. 80 °C.

On request:
Various accuracies and pre-stressing classes available.

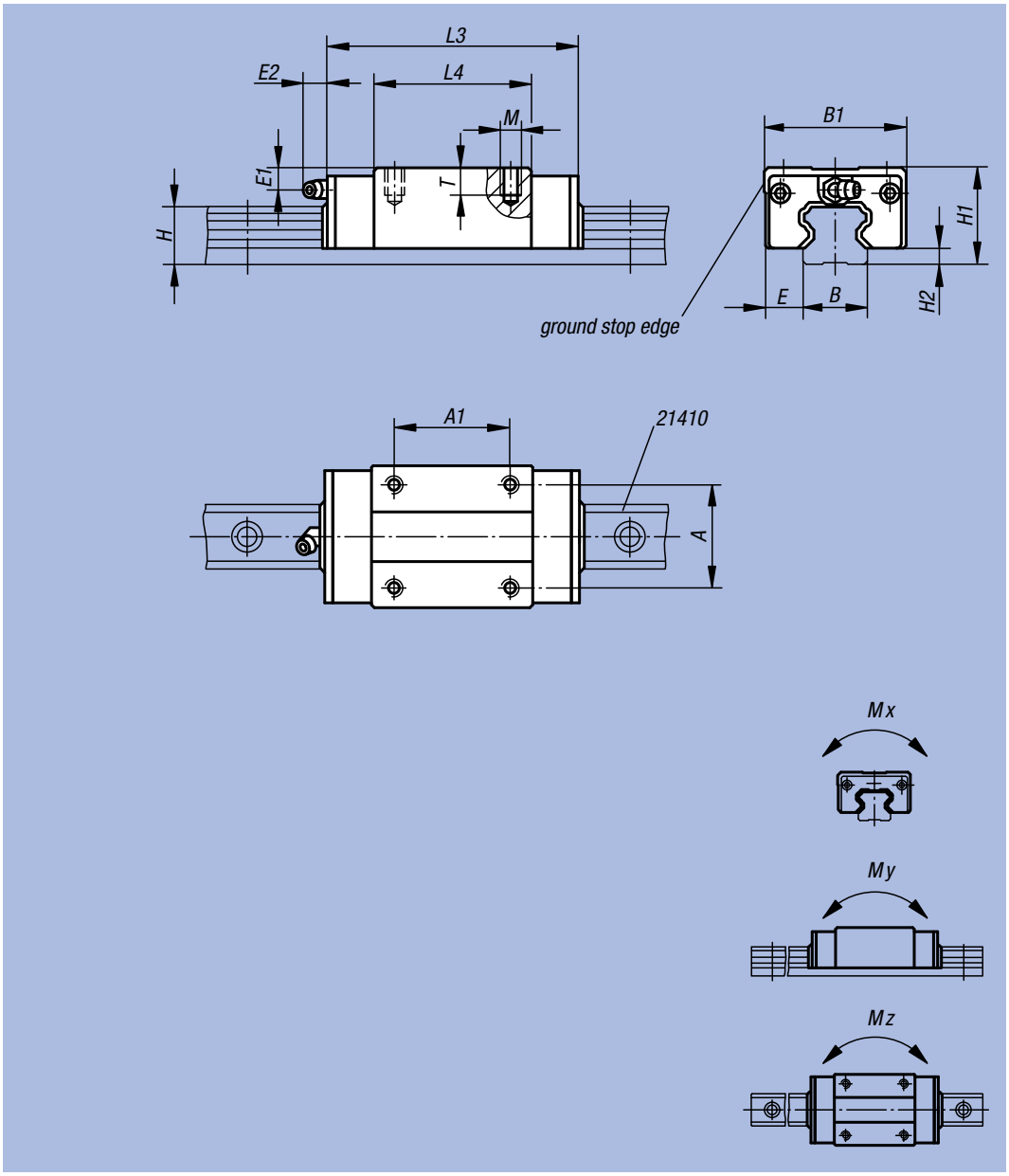

Order No.	Size	Mx Nm	My Nm	Mz Nm	Dynamic base loads N	Static base loads N	Lubrication hole
21404-15106601	15	70	50	50	6850	12700	Ø3
21404-20107801	20	220	180	180	14500	25600	M6x1
21404-25108801	25	360	320	310	21400	40000	M6x1
21404-30110901	30	600	500	490	29800	54900	M6x1

Order No.	Size	A	A1	B	B1	E	E1	E2	H	H1	H2	L3	L4	M	T	kg
21404-15106601	15	26	26	15	34	9,5	4,3	5	14	24	4,6	66	40	M4	5,6	0,170
21404-20107801	20	32	32	20	42	11	5	13,5	18	28	5	77,8	48,8	M5	7	0,260
21404-25108801	25	35	35	23	48	12,5	4,8	13,5	22	33	7	88	57	M6	8,4	0,380
21404-30110901	30	40	40	28	60	16	7	13	26	42	9	109	72	M8	11,2	0,810

Compact Carriages

short



Material:
Body in tempered steel
Balls, roller bearing steel.
Diverters, plastic.

Surface finish:
Natural finish

Sample order:
nlm 21406-15004801

Note:
Standard carriage tight, with revolving ball guidance according to accuracy N without pre-stressing (Z0). With double-sided close-off seal. 4-row models with round arch profile. The tracks of the profile guide rails are set below an angle of 45° and thus can carry loads from all directions.

High dynamic values: v = 5 m/s.

Application temperature in continuous operation at max. 80 °C.

On request:
Various accuracies and pre-stressing classes available.

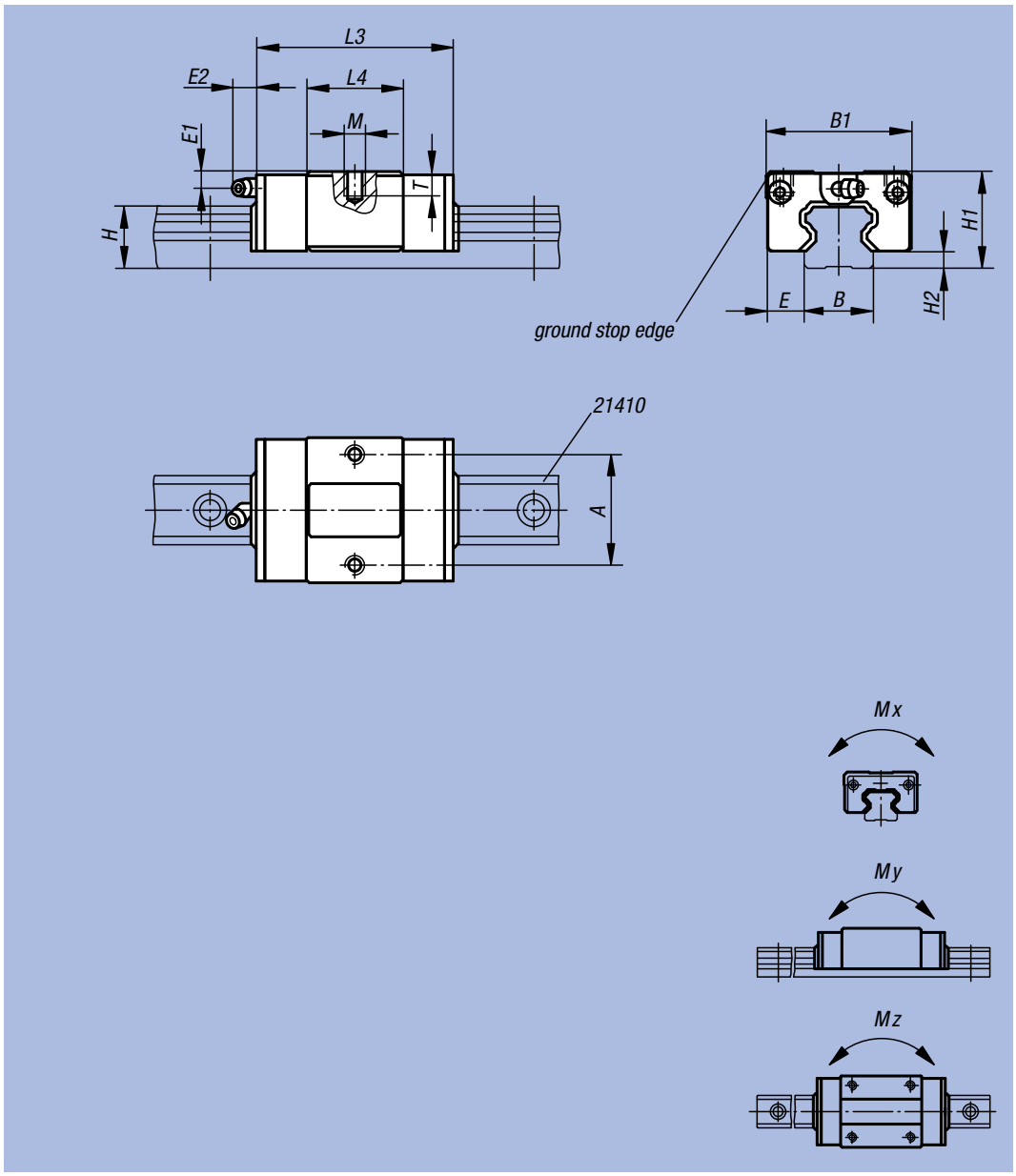

Order No.	Size	Mx Nm	My Nm	Mz Nm	Dynamic base loads N	Static base loads N	Lubrication hole
21406-15004801	15	40	28	28	3900	7250	Ø3
21406-20005801	20	126	103	103	8300	14700	M6x1
21406-25006301	25	200	175	172	11900	22300	M6x1
21406-30007601	30	320	270	270	15950	29400	M6x1

Order No.	Size	A	B	B1	E	E1	E2	H	H1	H2	L3	L4	M	T	kg
21406-15004801	15	26	15	34	9,5	4,3	5	14	24	4,6	47,6	21,6	M4	5,6	0,100
21406-20005801	20	32	20	42	11	5	13,5	18	28	5	58	28	M5	7	0,170
21406-25006301	25	35	23	48	12,5	4,8	13,5	22	33	7	62,5	31,5	M6	8,4	0,210
21406-30007601	30	40	28	60	16	7	13	26	42	9	75,6	38,6	M8	11,2	0,480

Profile Guide Rails



Material:
Steel

Surface finish:
Tracks inductively hardened and ground.

Sample order:
nlm 21410-1520X0520

Note:
Profile guide rails can be screwed on from above. The profile guide rails are available in four sizes and one or more carriages can be assembled on them. 4-row models with round arch profile. The tracks of the profile guide rails are set below an angle of 45° and thus can carry loads from all directions.

The profile guide rails correspond to the market standard and can replace linear guides of the same design by other manufacturers.

On request:
Lengths up to a max. 4000 mm.

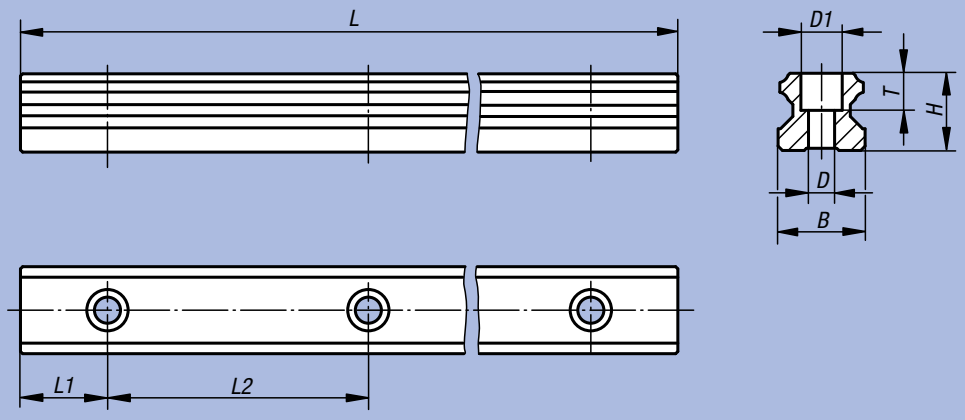

Application example:
makes it possible to arrange the profile guide rails with carriages as a guiding system

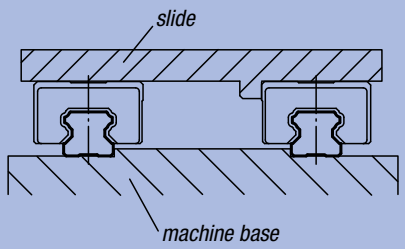

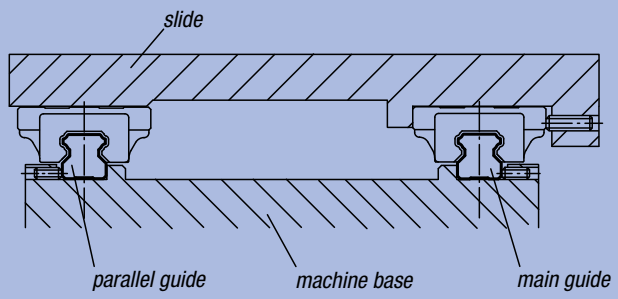

Order No.	Size	B	D	D1	H	L	L1	L2	T	kg/m
21410-1520X0520	15	15	4,5	7,5	14	520	20	60	5,3	1,400
21410-2020X0520	20	20	6	9,5	18	520	20	60	8,5	2,600
21410-2520X0520	25	23	7	11	22	520	20	60	9	3,600
21410-3020X0520	30	28	9	14	26	520	20	80	12	5,200

Miniature carriage

in stainless steel



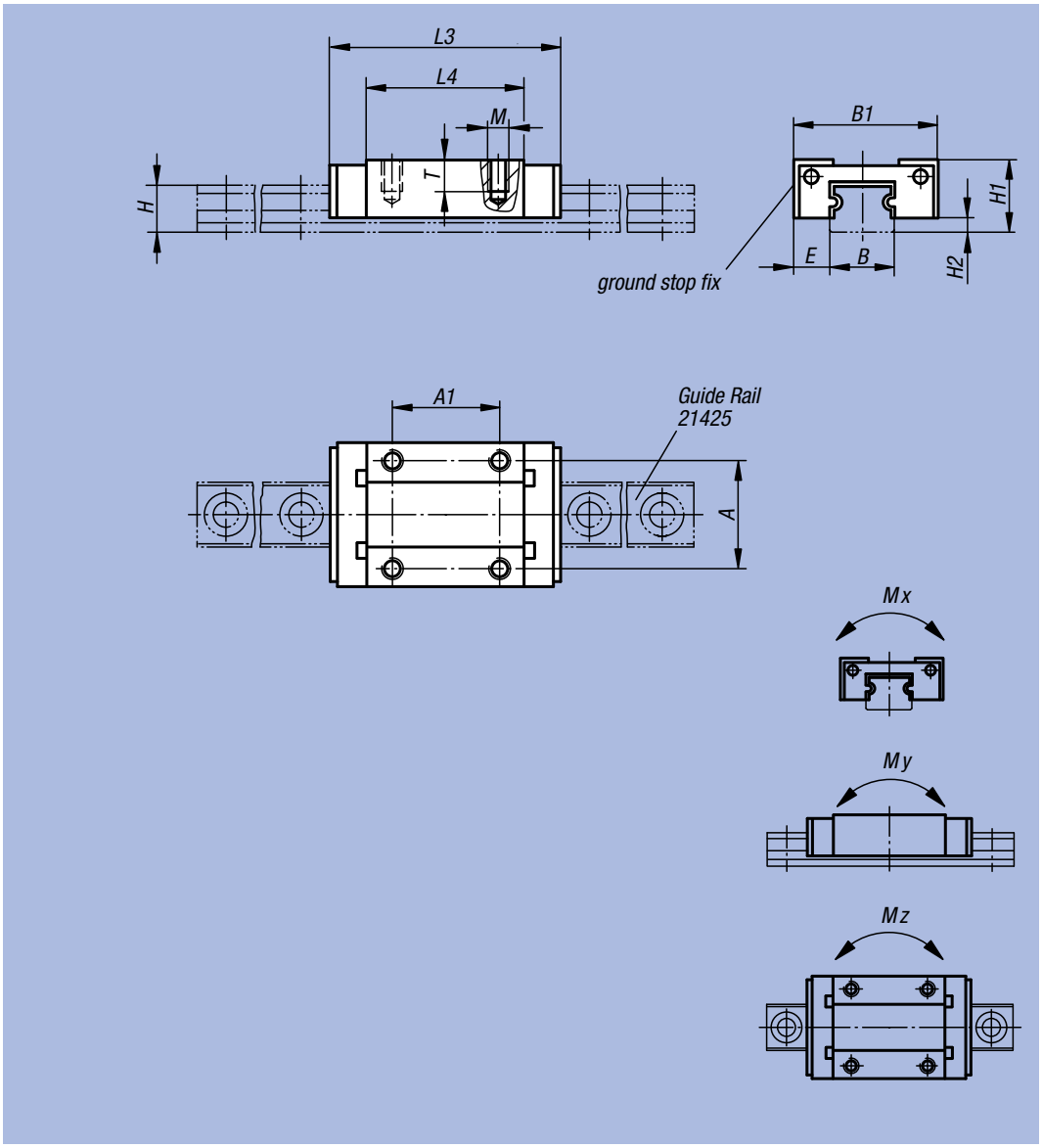

Material:
Body, stainless steel type 1.4034; balls, stainless steel type 1.4034; transfer sections, plastic

Surface finish:
Naturel finish

Sample order:
nlm 21420-07102301

Note:
Standard miniature carriage with ball bearing guide of precision N without initial tension (Z0). With end seal on both sides.
4-point ball bearing system with identical load angles and 2 ball bearings per carriage. Thus loads can be uniformly absorbed from all sides.

Max. acceleration: 80 m/s².
Maximum traversing speed 3 m/s.
Application temperature
-20 °C to +80 °C.

Caution:
Always use the supplied mounting rail, as otherwise the the ball holder in the carriage is not guaranteed.

On request:
Various accuracies and pre-stressing classes available.

Order No.	Surface finish	Size	Mx Nm	My Nm	Mz Nm	Dynamic base loads N	Static base loads N
21420-07102301	standard	7	5,1	2,55	2,55	880	1370
21420-09103101	standard	9	10,4	5,1	5,1	1470	2250
21420-12103501	standard	12	14,7	8,04	8,72	2665	4020
21420-15104301	standard	15	30,2	16,5	17,9	4410	6570

Order No.	Surface finish	Size	A	A1	B	B1	E	H	H1	H2	L3	L4	M	T	kg
21420-07102301	standard	7	12	8	7	17	5	4,7	8	1,5	23,5	13,5	M2	2,5	0,013
21420-09103101	standard	9	15	10	9	20	5,5	5,5	10	2,2	31	20	M3	3	0,018
21420-12103501	standard	12	20	15	12	27	7,5	7,5	13	3	35	20,8	M3	3,5	0,037
21420-15104301	standard	15	25	20	15	32	8,5	9,5	16	4	43	25,7	M3	4	0,069

Miniature profile guide rails

in stainless steel



Material:
Stainless steel 1.4034

Surface finish:
Natural finish

Sample order:
nlm 21425-0705X0240

Note:
Profile guide rails can be screwed on from above. The profile rails, on which one or more carriages can be mounted, are available in four miniature sizes.
4-point ball bearing system with identical load angles and 2 ball bearings per carriage. Thus loads can be uniformly absorbed from all sides.

Max. acceleration: 80 m/s².
Maximum traversing speed 3 m/s.
Application temperature
-20 °C to +80 °C.

Combination of the rails is possible.

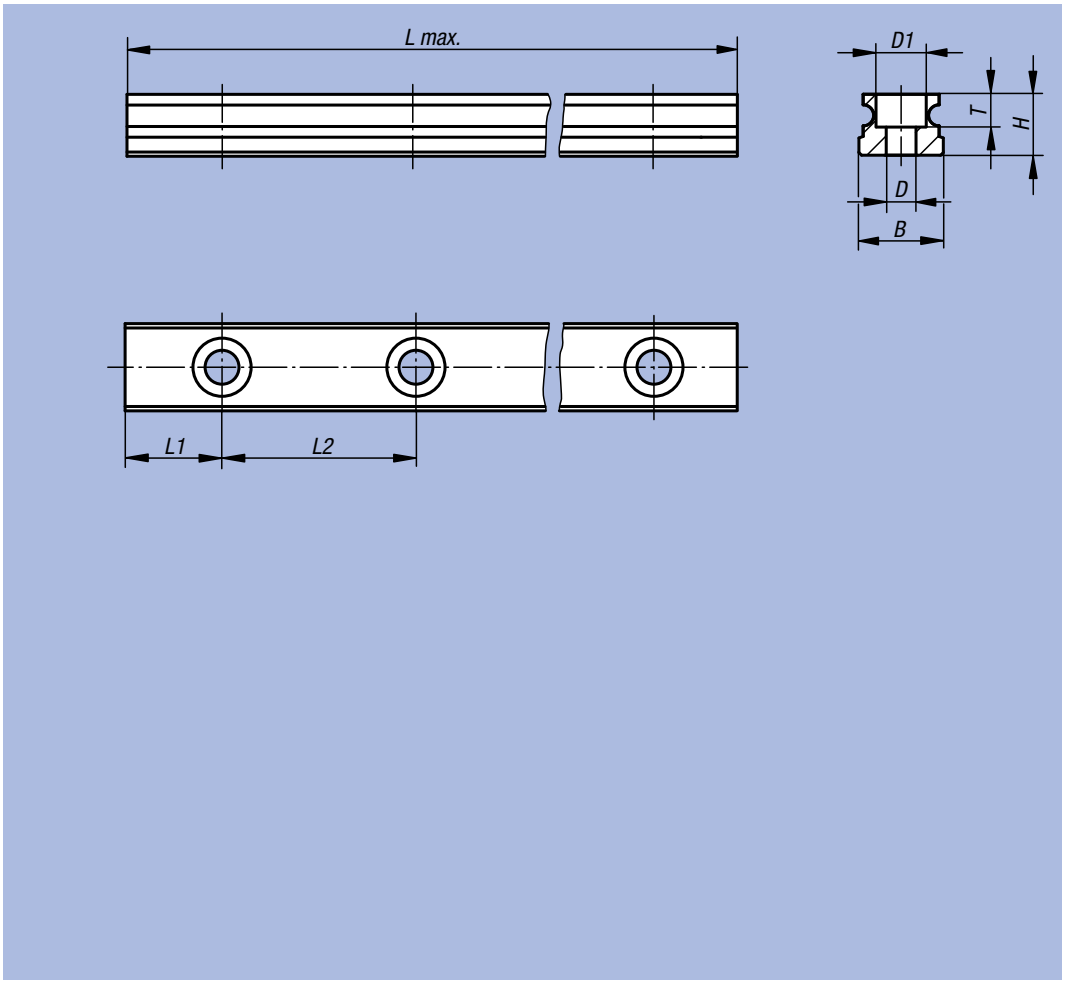

Order No.	Size	B	D	D1	H	L max.	L1	L2	T	kg/m
21425-0705X0240	7	7	2,4	4,2	4,7	240	5	15	2,3	0,230
21425-0907X0495	9	9	3,5	6	5,5	495	7,5	20	3,3	0,320
21425-1210X0570	12	12	3,5	6	7,5	570	10	25	4,5	0,580
21425-1515X0790	15	15	3,5	6	9,5	790	15	40	4,5	0,925

Linear Ball Bearings

with plastic cage



Material:
Outer cover, roller bearing steel.
Plastic cage.
Balls, steel.

Sample order:
nlm 21500-1202

Note:
The linear ball bearings correspond to series 3 of ISO 10285. With double-sided seal. The linear ball bearings are equipped with a plastic cage.
This makes for an quiet run and outstanding run quality. In the case of application temperatures above +80 °C, linear ball bearings with steel cage are recommended.

Recommended tolerances:
Shaft: h6
Housing: H7

Linear ball bearings with double-sided seal should be lubricated before installation.

The specified basic load ratings apply upon insertion of hardened and ground shafts.

Temperature range:
-20 °C up to +80 °C.

Model, closed

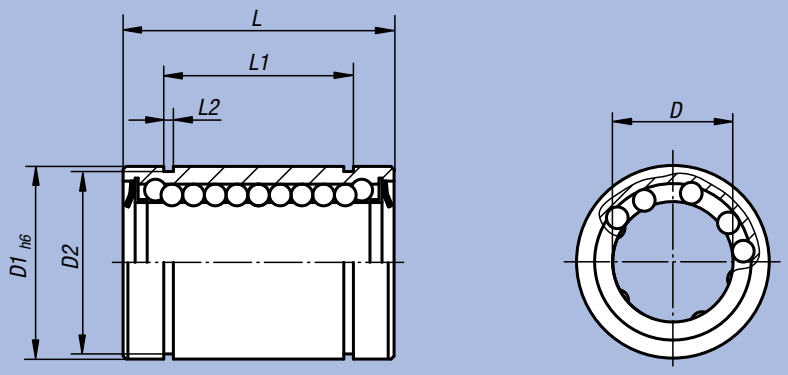

Model, opened

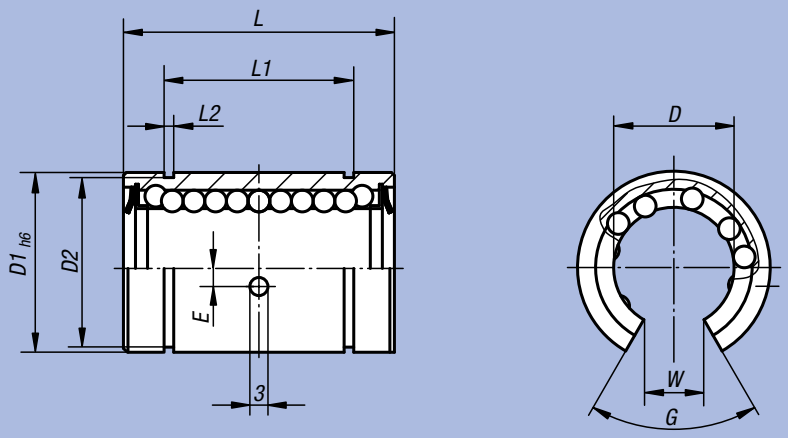

Position of the radial and axial fixation

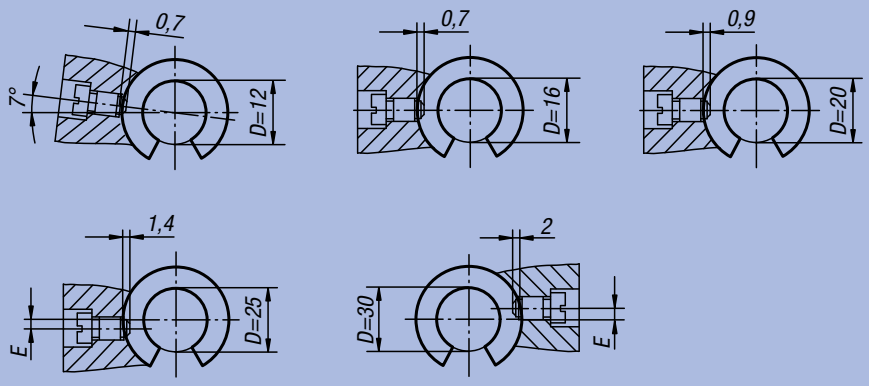

Order No. Surface finish closed	Order No. Surface finish open	D	D1	D2	E	G	L	L1	L2	W	Dynamic base loads N	Static base loads N	kg
21500-1202	-	12	22	21	-	-	32 -0,2	22,9 -0,2	1,3	-	520	800	0,040
21500-1602	21500-1612	16	26	24,9	0	78°	36 -0,2	24,9 -0,2	1,3	10	590	910	0,060
21500-2002	21500-2012	20	32	30,3	0	60°	45 -0,2	31,5 -0,2	1,6	10	880	1400	0,090
21500-2502	21500-2512	25	40	37,5	1,5	60°	58 -0,3	44,1 -0,3	1,85	12,5	1000	1600	0,210
21500-3002	21500-3012	30	47	44,5	2	50°	68 -0,3	52,1 -0,3	1,85	12,5	1600	2800	0,320

Linear Ball Bearings

with steel cage



Material:
Outer cover, roller bearing steel.
Steel cage.
Balls, steel.

Sample order:
nlm 21505-1202

Note:
The linear ball bearings correspond to series 3 of ISO 10285. With double-sided seal. The linear ball bearings are equipped with a steel cage.

Recommended tolerances:
Shaft: h6
Housing: H7

Linear ball bearings with double-sided seal should be lubricated before installation.

The specified basic load ratings apply upon insertion of hardened and ground shafts.

Model, closed

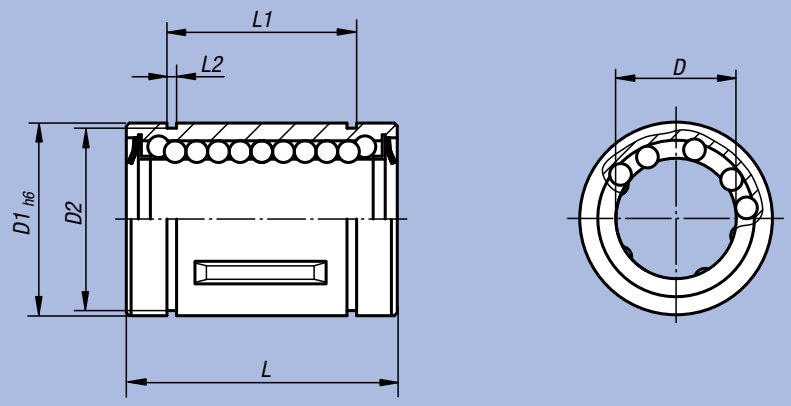

Model, opened

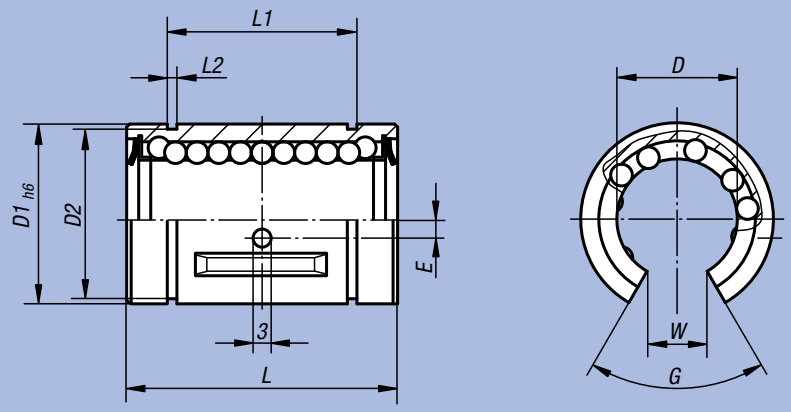

Position of the radial and axial fixation

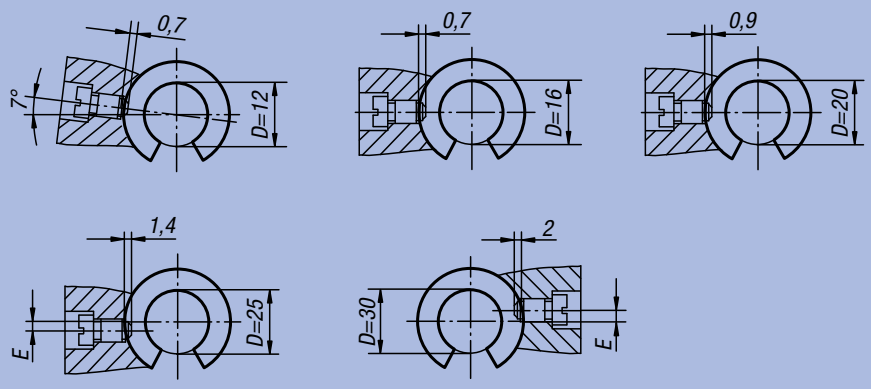

Order No. Surface finish closed	Order No. Surface finish open	D	D1	D2	E	G	L	L1	L2	W	Dynamic base loads NN	Static base loads N	kg
21505-1202	21505-1212	12	22	21	1,35	78°	32 -0,2	22,9 -0,2	1,3	7,5	420	714	0,050
21505-1602	21505-1612	16	26	24,9	0	78°	36 -0,2	24,9 -0,2	1,3	10	686	1092	0,080
21505-2002	21505-2012	20	32	30,3	0	60°	45 -0,2	31,5 -0,2	1,6	10	924	1610	0,110
21505-2502	21505-2512	25	40	37,5	1,5	60°	58 -0,3	44,1 -0,3	1,85	12,5	1470	2590	0,220
21505-3002	21505-3012	30	47	44,5	2	50°	68 -0,3	52,1 -0,3	1,85	12,5	2100	3920	0,290

Linear Ball Bearings

with angle error adjustment



Material:
Housing, plastic
Track plates, roller bearing steel.
Balls, steel.

Sample order:
nlm 21510-1202

Note:
The linear ball bearings correspond to series 3 of ISO 10285 with automatic angle error adjustment. With double-sided seal. These bearings comprise a highly precise die-cast plastic truss in which the clipped-on track plates of roller bearing steel are installed. The plastic truss serves at the same time as return and seal retainer. The seal consists of a special polyamide material with a low friction coefficient.

Recommended tolerances:
Shaft: h6
Housing: H7

Linear ball bearings with double-sided seal should be lubricated before installation.

The specified basic load ratings apply upon insertion of hardened and ground shafts.

Temperature range:
-20 °C up to +80 °C.

Model, closed

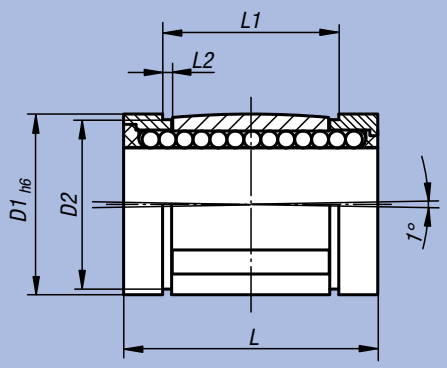

Model, opened

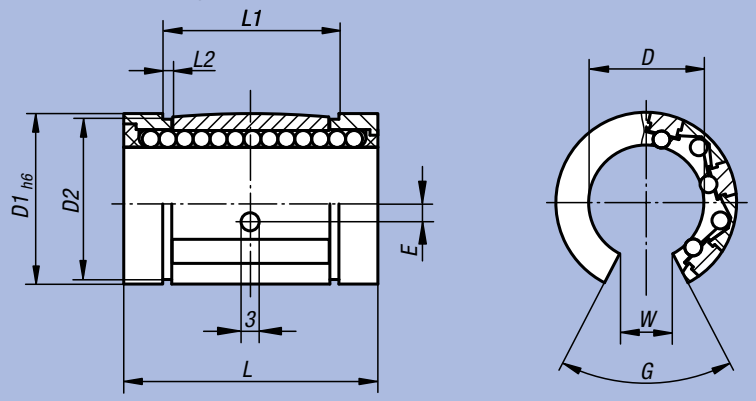

Position of the radial and axial fixation

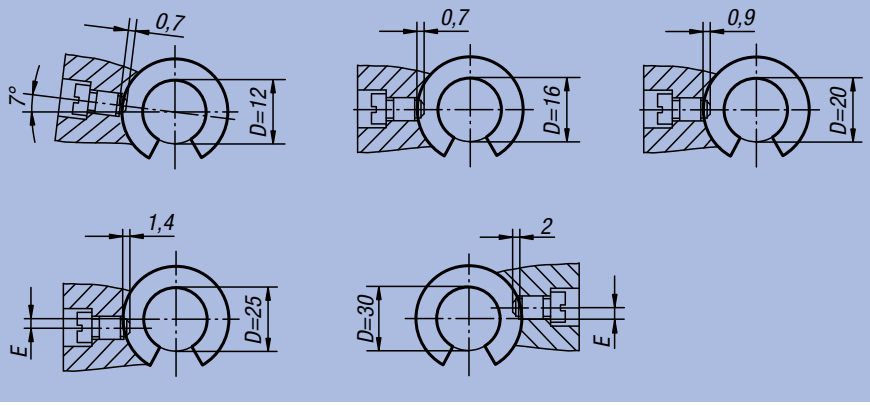

Order No. Surface finish closed	Order No. Surface finish open	D	D1	D2	E	G	L	L1	L2	W	Dynamic base loads N	Static base loads N	kg
21510-1202	21510-1212	12	22	21	1,35	66°	32 -0,2	22,9 -0,2	1,3	6,5	650	520	0,023
21510-1602	21510-1612	16	26	24,9	0	68°	36 -0,2	24,9 -0,2	1,3	9	800	630	0,028
21510-2002	21510-2012	20	32	30,3	0	55°	45 -0,2	31,5 -0,2	1,6	9	1500	1250	0,061
21510-2502	21510-2512	25	40	37,5	1,5	57°	58 -0,3	44,1 -0,3	1,85	11,5	2500	2200	0,122
21510-3002	21510-3012	30	47	44,5	2	57°	68 -0,3	52,1 -0,3	1,85	14	3200	2800	0,185

Linear Ball Bearings

with angle error adjustment, high basic load rating



Material:
Housing, plastic
Press Plates, roller bearing steel.
Balls, steel.

Sample order:
nlm 21515-1202

Note:
The linear ball bearings correspond to series 3 of ISO 10285. With double-sided double-lip seal. These bearings excel in comparison with a standard linear ball bearing owing to the double load-carrying capacity or eightfold travel life. By means of the angle error adjustment, misalignments of housing drill holes or shaft bowing under load are adjusted, the load distribution optimised and the uniform load of all the balls across the entire bearing length assured.

Recommended tolerances:
Shaft: h6
Housing: H7

Linear ball bearings with double-sided seal should be lubricated before installation.

The specified basic load ratings apply upon insertion of hardened and ground shafts.

Temperature range:
-20 °C up to +80 °C.

Model, closed

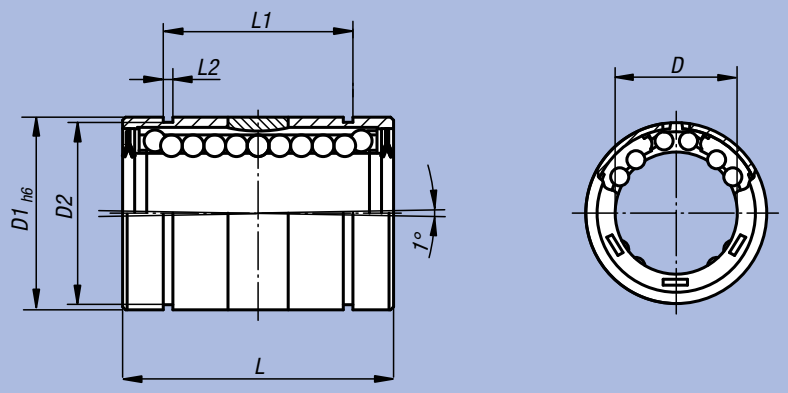

Model, opened

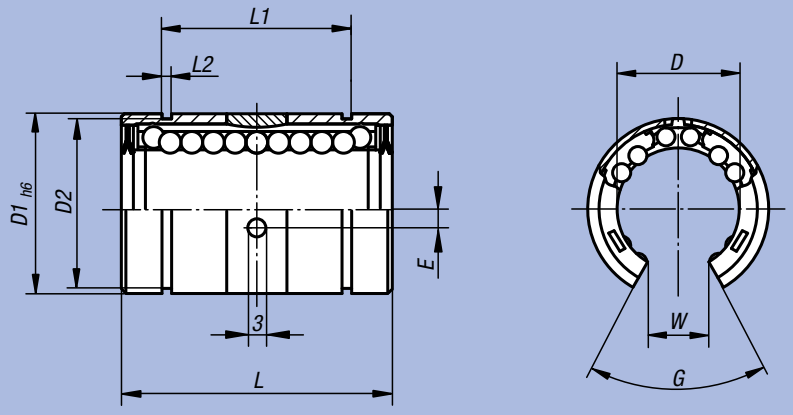

Position of the radial and axial fixation

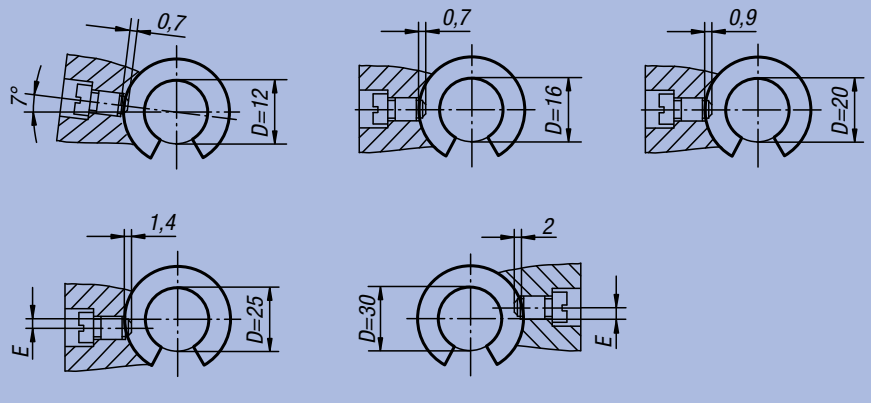

Order No. Surface finish closed	Order No. Surface finish open	D	D1	D2	E	G	L	L1	L2	W	Dynamic base loads N	Static base loads N	kg
21515-1202	21515-1212	12	22	21	1,35	70°	32 -0,2	22,6 -0,2	1,3	7	750	825	0,023
21515-1602	21515-1612	16	26	24,9	0	70°	36 -0,2	24,6 -0,2	1,3	9,4	2200	2400	0,030
21515-2002	21515-2012	20	32	30,3	0	60°	45 -0,2	31,2 -0,2	1,6	10,2	4000	4400	0,066
21515-2502	21515-2512	25	40	37,5	1,5	60°	58 -0,3	43,7 -0,3	1,85	14,4	6700	7300	0,133
21515-3002	21515-3012	30	47	44,5	2	55°	68 -0,3	51,7 -0,3	1,85	13,9	8300	9100	0,202

Linear Ball Bearings

with flange



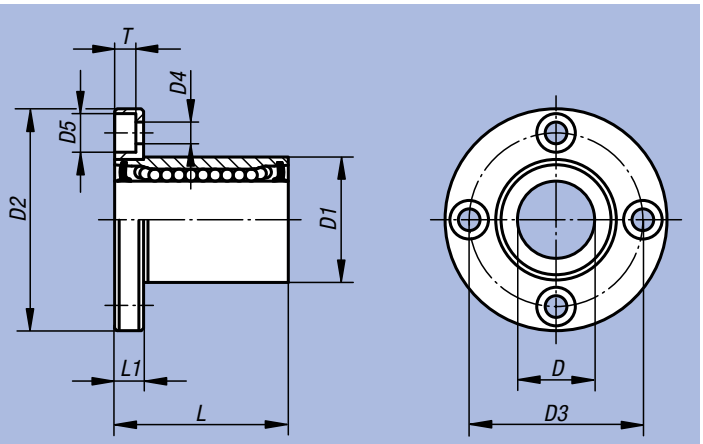

Material:
Housing, steel.
Plastic cage.
Balls, steel.

Sample order:
nlm 21518-1202

Note:
The linear ball bearings correspond to series 3 of ISO 10285. With double-sided seal. The linear ball bearings are equipped with a plastic cage.
This makes for an quiet run and outstanding run quality. With flange for direct mounting on the housing.

Recommended tolerances:
Shaft: h6
Housing: H7

Linear ball bearings with double-sided seal should be lubricated before installation.

The specified basic load ratings apply upon insertion of hardened and ground shafts.

Temperature range:
-20 °C up to +80 °C.

Accessory:
Precision Guide Shafts 21595.
Fastening Screws 07160.

Order No.	D	D1	D2	D3	D4	D5	L	L1	T	Dynamic base loads N	Static base loads N	kg
21518-1202	12	22	42	32	4,5	7,5	32	6	4,1	520	790	0,090
21518-1602	16	26	46	36	4,5	7,5	36	6	4,1	590	910	0,120
21518-2002	20	32	54	43	5,5	9	45	8	5,1	880	1400	0,190
21518-2502	25	40	62	51	5,5	9	58	8	5,1	1000	1600	0,340
21518-3002	30	47	76	62	6,6	11	68	10	6,1	1600	2800	0,550

Linear Ball Bearings

with flange, double bearing



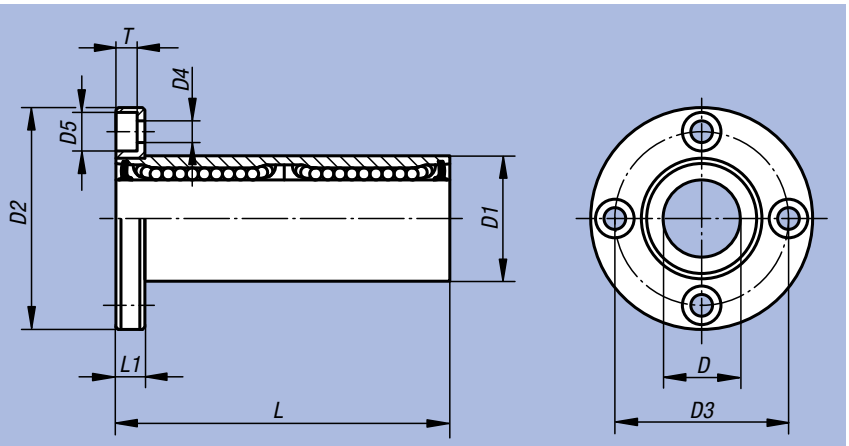

Material:
Housing, steel.
Plastic cage.
Balls, steel.

Sample order:
nlm 21520-1202

Note:
The linear ball bearings correspond to series 3 of ISO 10285. With double-sided seal. The linear ball bearings are equipped with a plastic cage.
This makes for an quiet run and outstanding run quality. With flange for direct mounting on the housing. Model as double bearing for insertion under torque load.

Recommended tolerances:
Shaft: h6
Housing: H7

Linear ball bearings with double-sided seal should be lubricated before installation.

The specified basic load ratings apply upon insertion of hardened and ground shafts.

Temperature range:
-20 °C up to +80 °C.

Accessory:
Precision Guide Shafts 21595.
Fastening screws 07160.

Order No.	D	D1	D2	D3	D4	D5	L	L1	T	Dynamic base loads N	Static base loads N	kg
21520-1202	12	22	42	32	4,5	7,5	57	6	4,1	657	1200	0,100
21520-1602	16	26	46	36	4,5	7,5	70	6	4,1	1230	2350	0,190
21520-2002	20	32	54	43	5,5	9	80	8	5,1	1400	2750	0,260
21520-2502	25	40	62	51	5,5	9	112	8	5,1	1560	3140	0,520
21520-3002	30	47	76	62	6,6	11	123	10	6,1	2490	5490	0,670

Linear Housing Units

with flange



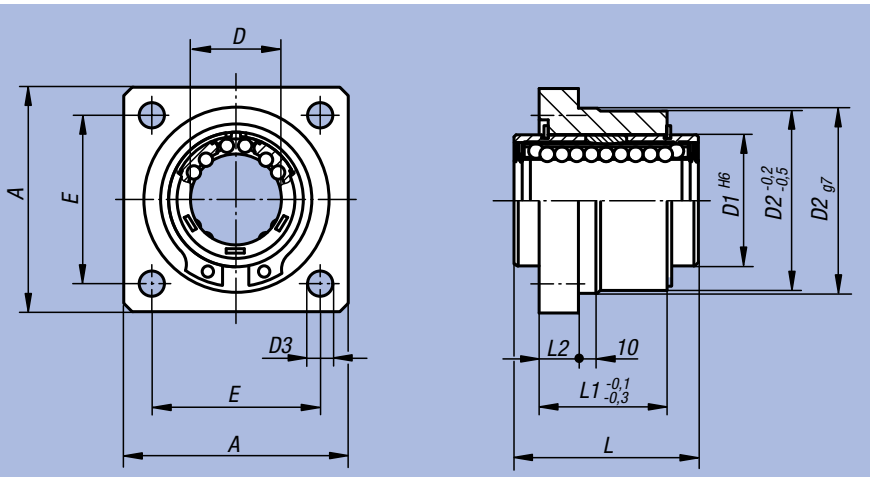

Material:
Housing in aluminium

Surface finish:
Housing natural finish

Sample order:
nlm 21522-121002

Note:
The ready-to-install linear housing units consist of an extruded aluminium housing, installed linear ball bearings with angle error adjustment 21510 and double-sided seal. Mounting of the bearings within the housing with circlips DIN 472.

Recommended shaft tolerance: h6.

Basic load ratings according to specification of the linear ball bearings.

On request:
Linear housing units can be equipped with all of the linear ball bearings presented in this catalogue.

Accessory:
Precision Guide Shafts 21595.
Fastening screws 07160 or 07161.

Order No.	A	D	D1	D2	D3	E	L	L1	L2	kg
21522-121002	40	12	22	32	5,5	30	32	22	6	0,120
21522-161002	50	16	26	38	5,5	35	36	24	8	0,170
21522-201002	60	20	32	46	6,6	42	45	30	10	0,330
21522-251002	70	25	40	58	6,6	54	58	42	12	0,680
21522-301002	80	30	47	66	9	60	68	50	14	1,030

Linear Housing Units

with flange, Tandem



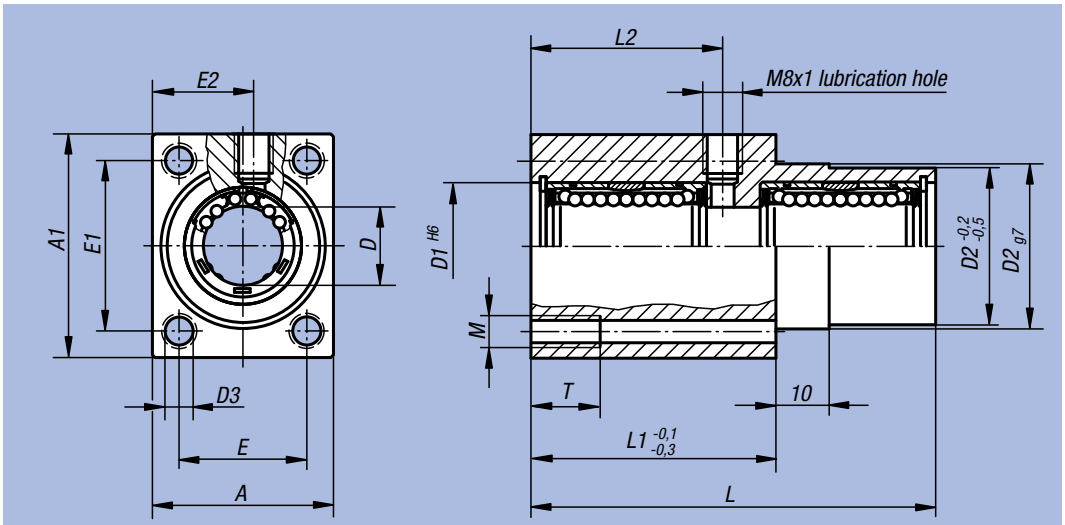

Material:
Housing in aluminium

Surface finish:
Housing natural finish

Sample order:
nlm 21524-121002

Note:
The ready-to-install linear housing units consist of an extruded aluminium housing, two linear ball bearings with angle error adjustment 21510 and double-sided seal. Mounting of the bearings within the housing with circlips DIN 472.

Recommended shaft tolerance: h6.

Basic load ratings according to specification of the linear ball bearings (x2).

On request:
Linear housing units can be equipped with all of the linear ball bearings presented in this catalogue.

Accessory:
Attachment Seals 21560.
Precision Guide Shafts 21595.
Fastening screws 07160 or 07161.

Order No.	A	A1	D	D1	D2	D3	E	E1	E2	L	L1	L2	M	T	kg
21524-121002	34	42	12	22	30	5,3	24	32	19	76	46	36	M6	13	0,200
21524-161002	40	50	16	26	35	6,6	28	38	22	84	50	40	M8	18	0,320
21524-201002	50	60	20	32	42	8,4	35	45	27	104	60	50	M10	22	0,550
21524-251002	60	74	25	40	52	10,5	42	56	32	130	73	63	M12	26	1,170
21524-301002	70	84	30	47	61	13,5	50	64	37	152	82	74	M16	34	1,500

Linear Housing Units

individual, closed



Material:
Housing in aluminium

Surface finish:
Housing natural finish

Sample order:
nlm 21530-121002

Note:
The ready-to-install linear housing units consist of an extruded aluminium housing, installed linear ball bearings with angle error adjustment 21510 and double-sided seal. Mounting of the bearings within the housing with circlips DIN 472.

Recommended shaft tolerance: h6.

Basic load ratings according to specification of the linear ball bearings.

On request:
Linear housing units can be equipped with all of the linear ball bearings presented in this catalogue.

Accessory:
Attachment Seals 21560.
Precision Guide Shafts 21595.
Fastening screws 07160 or 07161.

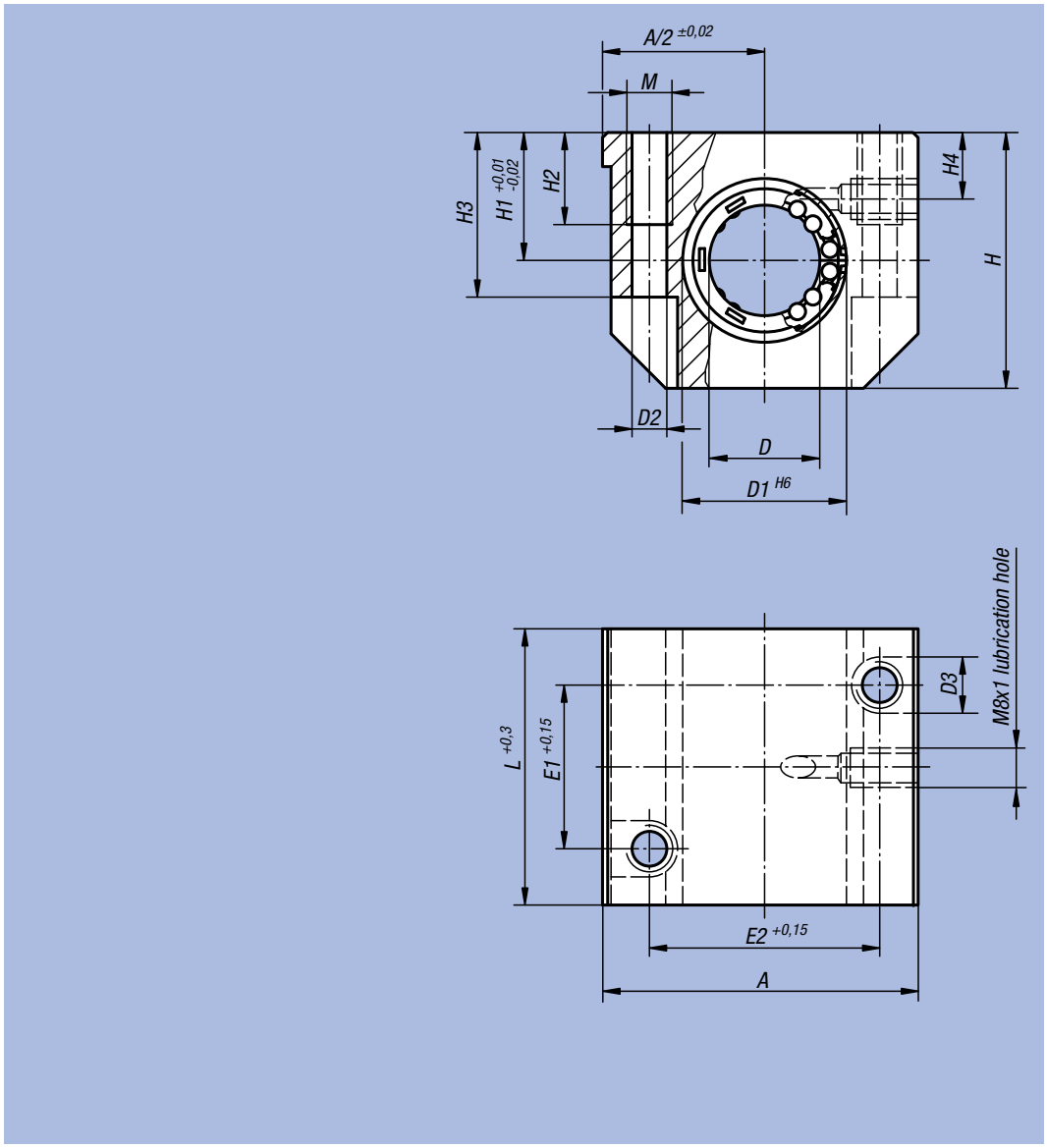

Order No.	A	D	D1	D2	D3	E1	E2	H	H1	H2	H3	H4	L	M	kg
21530-121002	43	12	22	4,2	8	23	32	35	18	13	25	10	39	M5	0,130
21530-161002	53	16	26	5,2	10	26	40	42	22	13	30	12	43	M6	0,200
21530-201002	60	20	32	6,8	11	32	45	50	25	18	34	13	54	M8	0,340
21530-251002	78	25	40	8,6	15	40	60	60	30	22	40	15	67	M10	0,650
21530-301002	87	30	47	8,6	15	45	68	70	35	22	48	16	79	M10	0,970

Linear Housing Units

individual, open



Material:
Housing in aluminium

Surface finish:
Housing natural finish

Sample order:
nlm 21535-121012

Note:
The ready-to-install linear housing units consist of an extruded aluminium housing, installed linear ball bearings with angle error adjustment 21510 and double-sided seal. Mounting of the bearings within the housing with socket head screws.

Recommended shaft tolerance: h6.

Basic load ratings according to specification of the linear ball bearings.

On request:
Linear housing units can be equipped with all of the linear ball bearings presented in this catalogue.

Accessory:
Attachment Seals 21560.
Precision Guide Shafts 21590 or 21595.
Fastening screws 07160 or 07161.

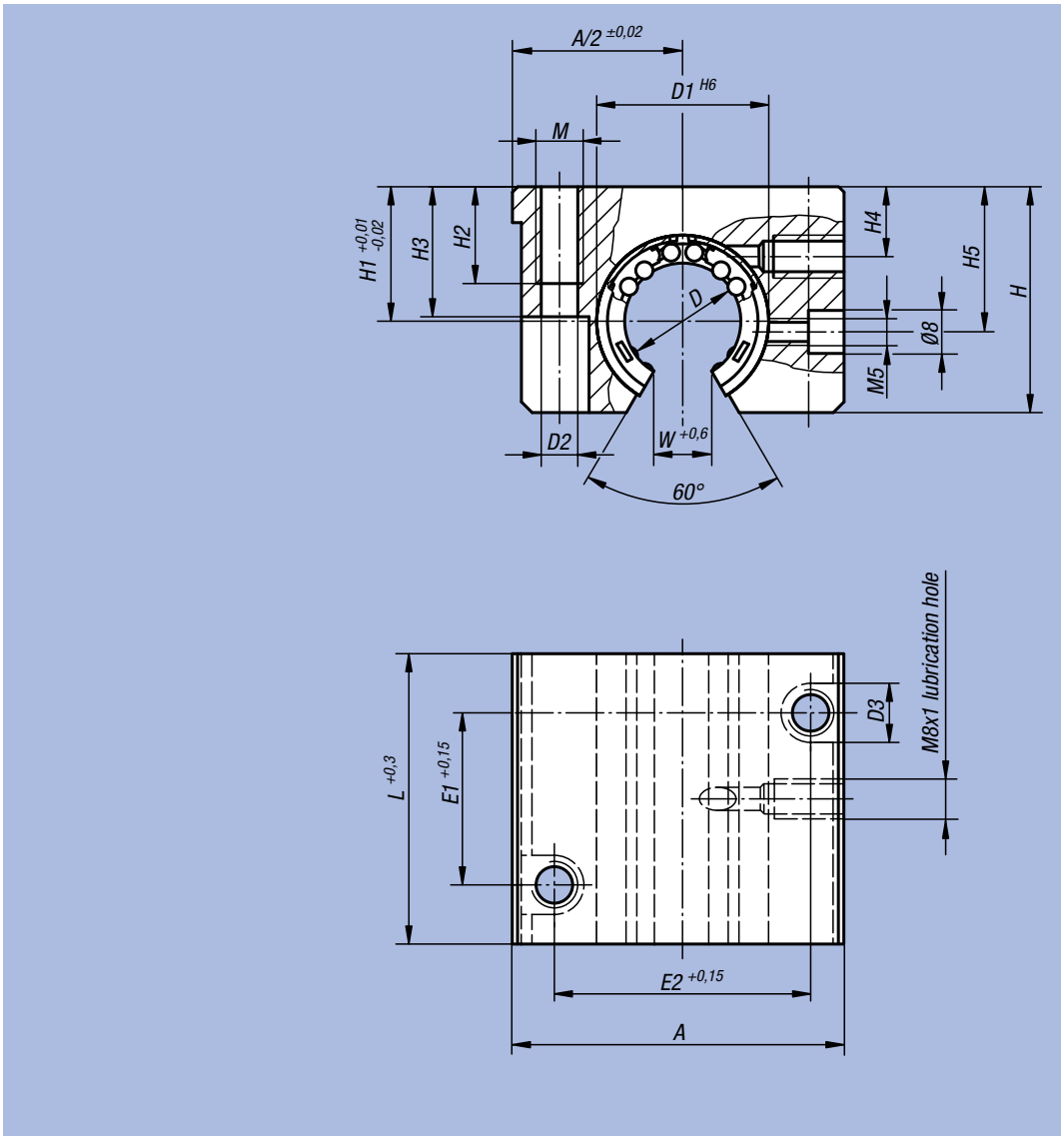

Order No.	A	D	D1	D2	D3	E1	E2	H	H1	H2	H3	H4	H5	L	M	W	kg
21535-121012	43	12	22	4,2	8	23	32	28	18	11	23,5	8	16,65	39	M5	7	0,110
21535-161012	53	16	26	5,2	10	26	40	35	22	13	30	12	22	43	M6	9,4	0,170
21535-201012	60	20	32	6,8	11	32	45	42	25	18	34	13	25	54	M8	10,2	0,300
21535-251012	78	25	40	8,6	15	40	60	51	30	22	40	15	31,5	67	M10	12,5	0,570
21535-301012	87	30	47	8,6	15	45	68	60	35	22	48	16	33	79	M10	13,9	0,860

Linear Housing Units

Tandem, closed



Material:
Housing in aluminium

Surface finish:
Housing natural finish

Sample order:
nlm 21540-121002

Note:
The ready-to-install linear housing units consist of an extruded aluminium housing, two installed linear ball bearings with angle error adjustment 21510 and double-sided seal. Mounting of the bearings within the housing with circlips DIN 472.

Recommended shaft tolerance: h6.

Basic load ratings according to specification of the linear ball bearings (x2).

On request:
Linear housing units can be equipped with all of the linear ball bearings presented in this catalogue.

Accessory:
Attachment Seals 21560.
Precision Guide Shafts 21595.
Fastening screws 07160 or 07161.

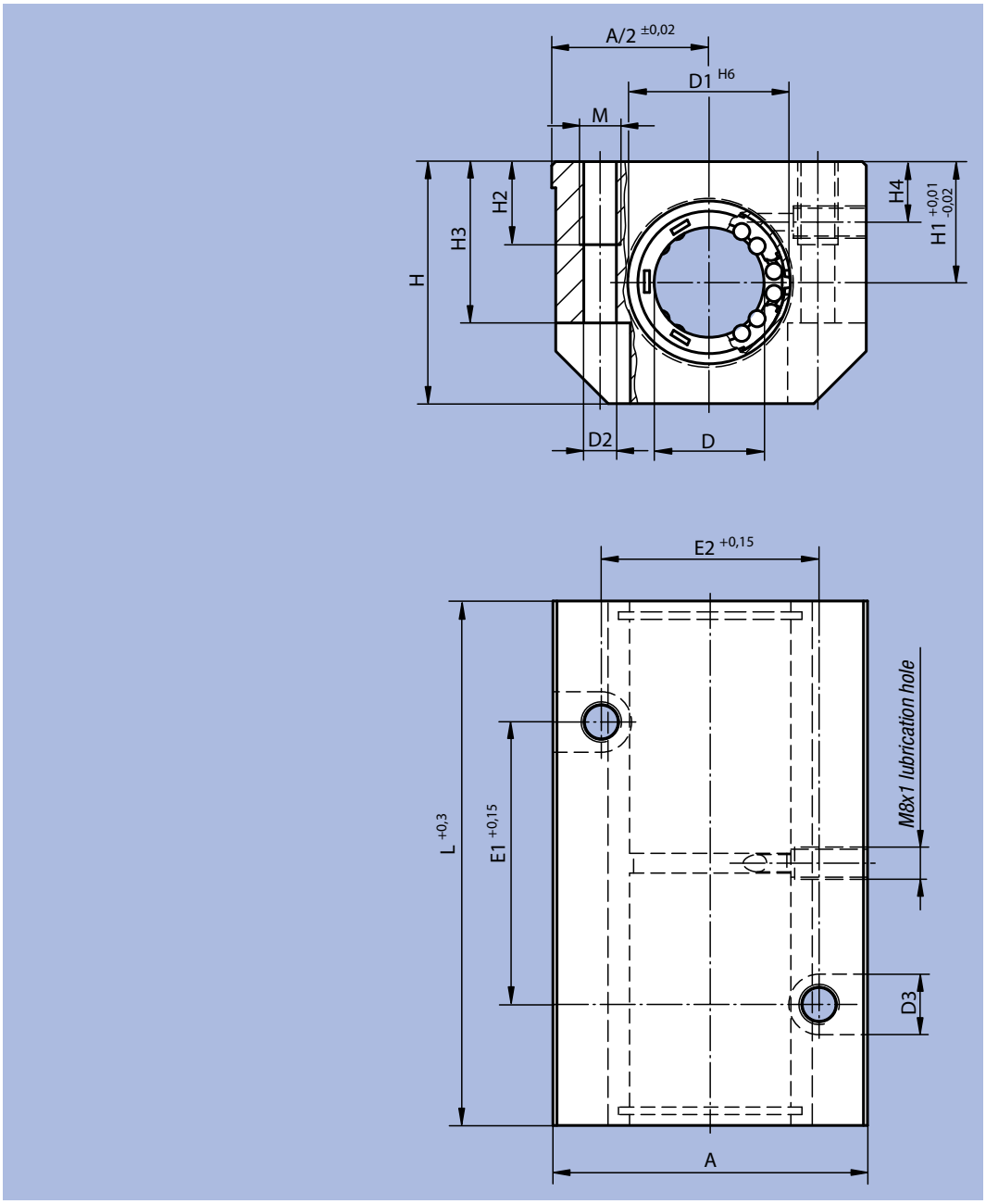

Order No.	A	D	D1	D2	D3	E1	E2	H	H1	H2	H3	H4	L	M	kg
21540-121002	43	12	22	5,2	10	40	30	35	18	13	25	10	76	M6	0,270
21540-161002	53	16	26	5,2	10	45	36	42	22	13	30	12	84	M6	0,410
21540-201002	60	20	32	6,8	11	55	45	50	25	18	34	13	104	M8	0,720
21540-251002	78	25	40	8,6	15	70	54	60	30	22	40	15	130	M10	1,350
21540-301002	87	30	47	10,3	18	85	62	70	35	26	48	16	152	M12	2,010

Linear Housing Units

Tandem, open



Material:
Housing in aluminium

Surface finish:
Housing natural finish

Sample order:
nlm 21545-121012

Note:
The ready-to-install linear housing units consist of an extruded aluminium housing, four installed linear ball bearings with angle error adjustment 21510 and double-sided seal. Mounting of the bearings within the housing with socket head screws.

Recommended shaft tolerance: h6.

Basic load ratings according to specification of the linear ball bearings (x2).

On request:
Linear housing units can be equipped with all of the linear ball bearings presented in this catalogue.

Accessory:
Attachment Seals 21560.
Precision Guide Shafts 21590 or 21595.
Fastening screws 07160 or 07161.

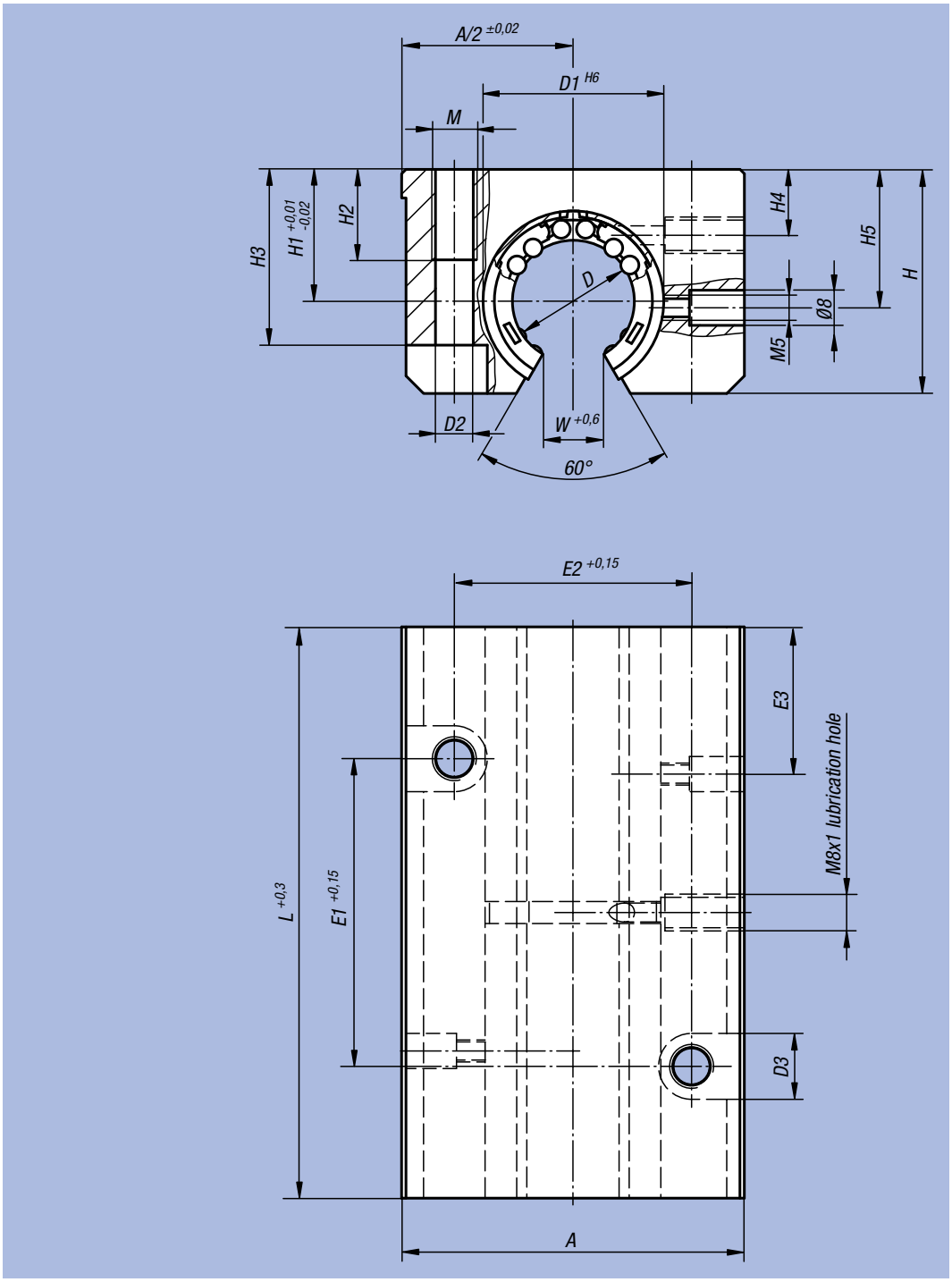

Order No.	A	D	D1	D2	D3	E1	E2	E3	H	H1	H2	H3	H4	H5	L	M	W	kg
21545-121012	43	12	22	5,2	10	40	30	19,5	30	18	13	25	8	16,65	76	M6	7	0,220
21545-161012	53	16	26	5,2	10	45	36	21,5	35	22	13	30	12	22	84	M6	9,4	0,340
21545-201012	60	20	32	6,8	11	55	45	27	42	25	18	34	13	25	104	M8	10,2	0,620
21545-251012	78	25	40	8,6	15	70	54	33,5	51	30	22	40	15	31,5	130	M10	12,9	1,170
21545-301012	87	30	47	10,3	18	85	62	39,5	60	35	26	48	16	33	152	M12	14,4	1,680

Linear Housing Units

Quadro, closed



Material:
Housing in aluminium

Surface finish:
Housing natural finish

Sample order:
nlm 21550-121002

Note:
The ready-to-install linear housing units consist of an extruded aluminium housing, four installed linear ball bearings with angle error adjustment 21510 and double-sided seal. Mounting of the bearings within the housing with circlips DIN 472.

Recommended shaft tolerance: h6.

Basic load ratings according to specification of the linear ball bearings (x4).

On request:
Linear housing units can be equipped with all of the linear ball bearings presented in this catalogue.

Accessory:
Attachment Seals 21560.
Precision Guide Shafts 21595.
Fastening screws 07160 or 07161.

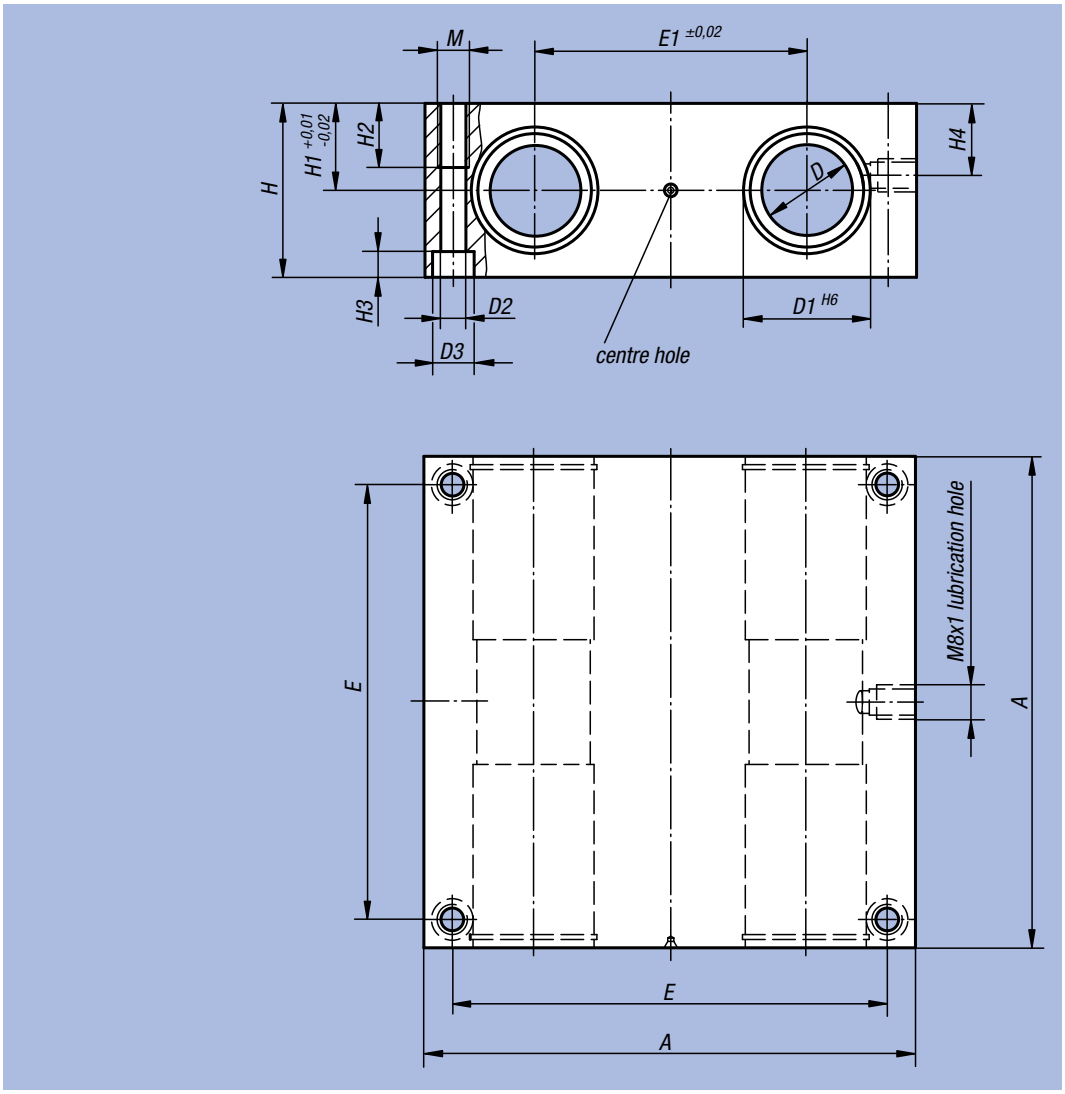

Order No.	A	D	D1	D2	D3	E	E1	H	H1	H2	H3	H4	M	kg
21550-121002	85	12	22	5,3	10	73	42	32	16	13	5,4	13	M6	0,520
21550-161002	100	16	26	5,3	10	88	54	36	18	13	5,4	15	M6	0,780
21550-201002	130	20	32	6,8	11	115	72	46	23	18	6,4	19	M8	1,740
21550-251002	160	25	40	9	15	140	88	56	28	22	8,6	24	M10	3,130
21550-301002	180	30	47	10,5	18	158	96	64	32	26	10,6	27	M12	4,430

Linear Housing Units

Quadro, open



Material:
Housing in aluminium

Surface finish:
Housing natural finish

Sample order:
nlm 21555-121012

Note:
The ready-to-install linear housing units consist of an extruded aluminium housing, four installed linear ball bearings with angle error adjustment 21510 and double-sided seal. Mounting of the bearings within the housing with socket head screws.

Recommended shaft tolerance: h6.

Basic load ratings according to specification of the linear ball bearings (x4).

On request:
Linear housing units can be equipped with all of the linear ball bearings presented in this catalogue.

Accessory:
Attachment Seals 21560.
Precision Guide Shafts 21590 or 21595.
Fastening screws 07160 or 07161.

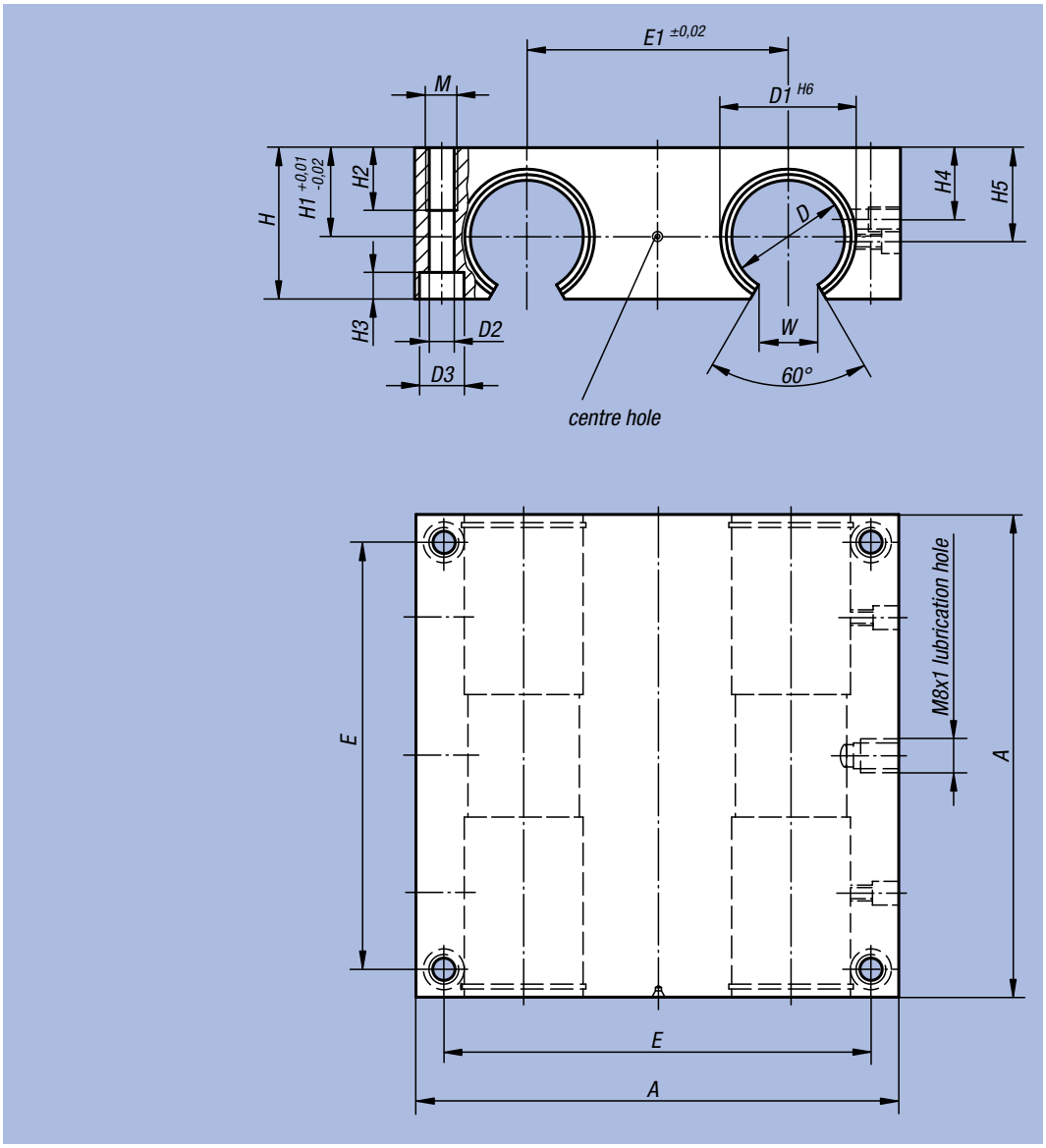

Order No.	A	D	D1	D2	D3	E	E1	H	H1	H2	H3	H4	H5	M	W	kg
21555-121012	85	12	22	5,3	10	73	42	30	18	13	5,4	10	16,65	M6	7	0,450
21555-161012	100	16	26	5,3	10	88	54	35	22	13	5,4	12	22	M6	9,4	0,730
21555-201012	130	20	32	6,8	11	115	72	42	25	18	6,4	13	25	M8	10,2	1,480
21555-251012	160	25	40	9	15	140	88	51	30	22	8,6	15	31,5	M10	12,9	2,680
21555-301012	180	30	47	10,5	18	158	96	60	35	26	10,6	16	33	M12	13,9	3,950

Attachment Seals

Double-lip Sealing Rings



Material, surface finish:
Ring in steel;
rubber NBR

Sample order:
nlm 21560-120

Note:
In addition to the standard seals, attachment seals for linear ball linings are available. With these attachment seals, considerably improved dirt and dust protection is achieved.
The seals are inserted into the housing dill holes (tolerance H7) prior to the ball linings and secured with glue.

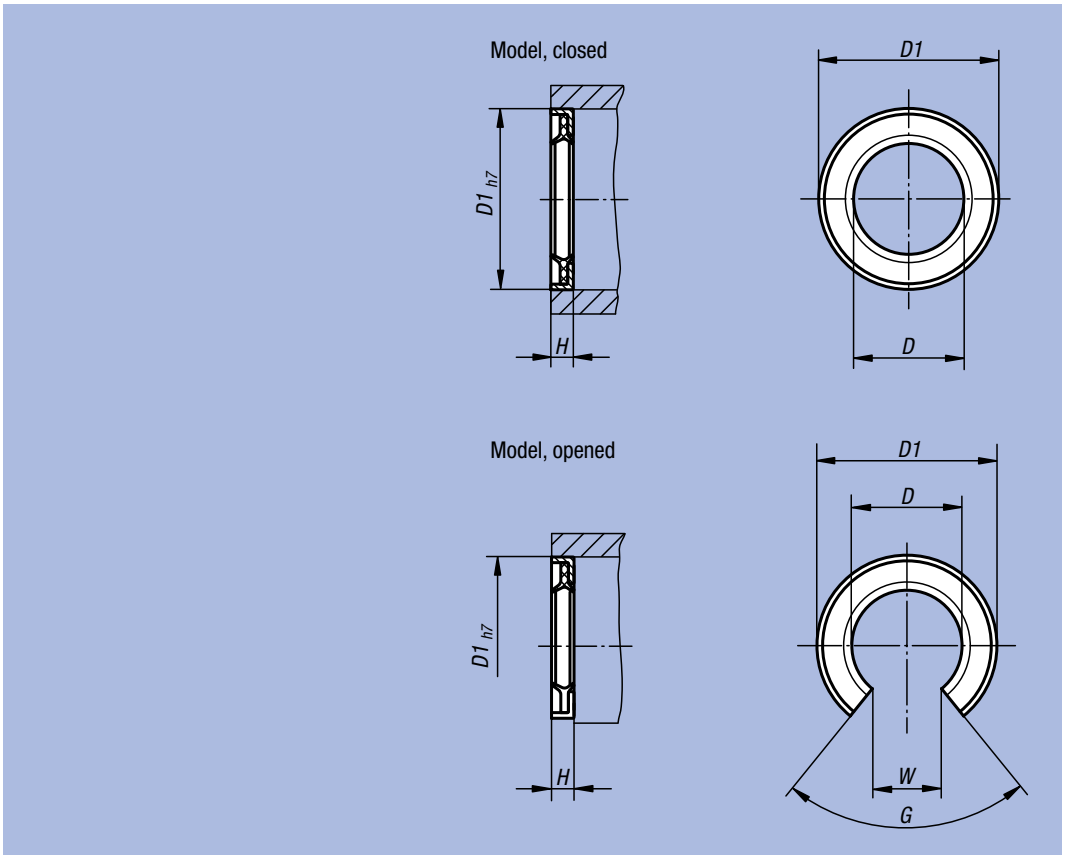

Order No. Surface finish closed	Order No. Surface finish open	D	D1	H	G	W
21560-120	21560-121	12	22	3	78°	7,5
21560-160	21560-161	16	26	3	78°	10
21560-200	21560-201	20	32	4	60°	10
21560-250	21560-251	25	40	4	60°	12,5
21560-300	21560-301	30	47	5	50°	12,5

Shaft Supports



Material, surface finish:
Aluminium, natural finish

Sample order:
nlm 21565-12375X0600

Note:
These shaft supports are required to support shafts in conjunction with linear ball bearings of an open design. Continuously supported shafts enable particularly firm bearings; however, in many cases support in sections suffices.
The standard length of our shaft supports is 600 mm. These pieces are composed of short or, optionally, long supports.

Accessory:
Precision Guide Shafts with installation drill holes 21590.
Fastening screws 07160.

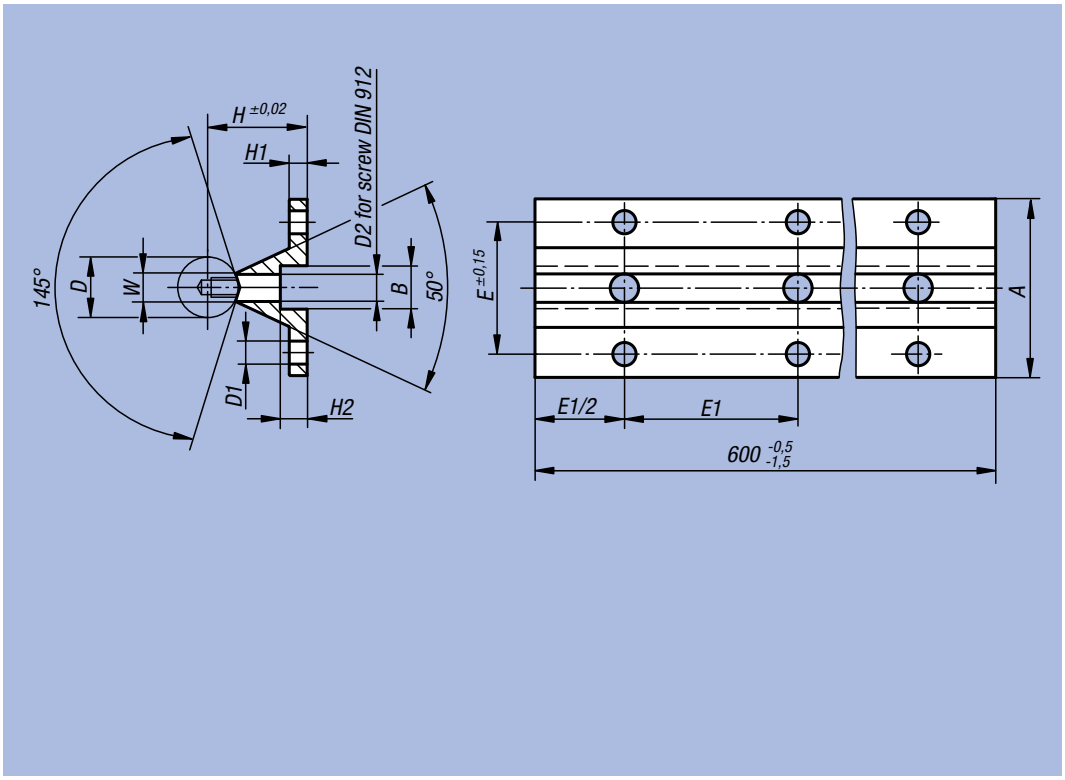

Order No.	Size	A	B	D	D1	D2	E	E1	H	H1	H2	W	kg
21565-12375X0600	12	40	8	12	4,5	M4x16	29	75	22	5	5	5,8	0,520
21565-16500X0600	16	45	9,5	16	5,5	M5x20	33	100	26	5	6	7	0,640
21565-20500X0600	20	52	11	20	6,6	M6x25	37	100	32	6	6,5	8,3	0,900
21565-25600X0600	25	57	14	25	6,6	M8x25	42	120	36	6	8,5	10,8	1,080
21565-30750X0600	30	69	17	30	9	M10x30	51	150	42	7	10,5	11	1,430

Traverses fixed



Material, surface finish:
Aluminium, natural finish

Sample order:
nlm 21575-12

Note:
Traverse with two location holes for easy and secure clamping and installation of the guide shafts. For the assembly of prefabricated table units with our Quadro 21550 or 21555 linear housing units.

This model permits the axial motion of the linear bearing unit. That is, the shafts are installed with the traverses fixed on the machine base.

Accessory:
Precision Guide Shafts 21595.
Fastening screws 07160 or 07161.

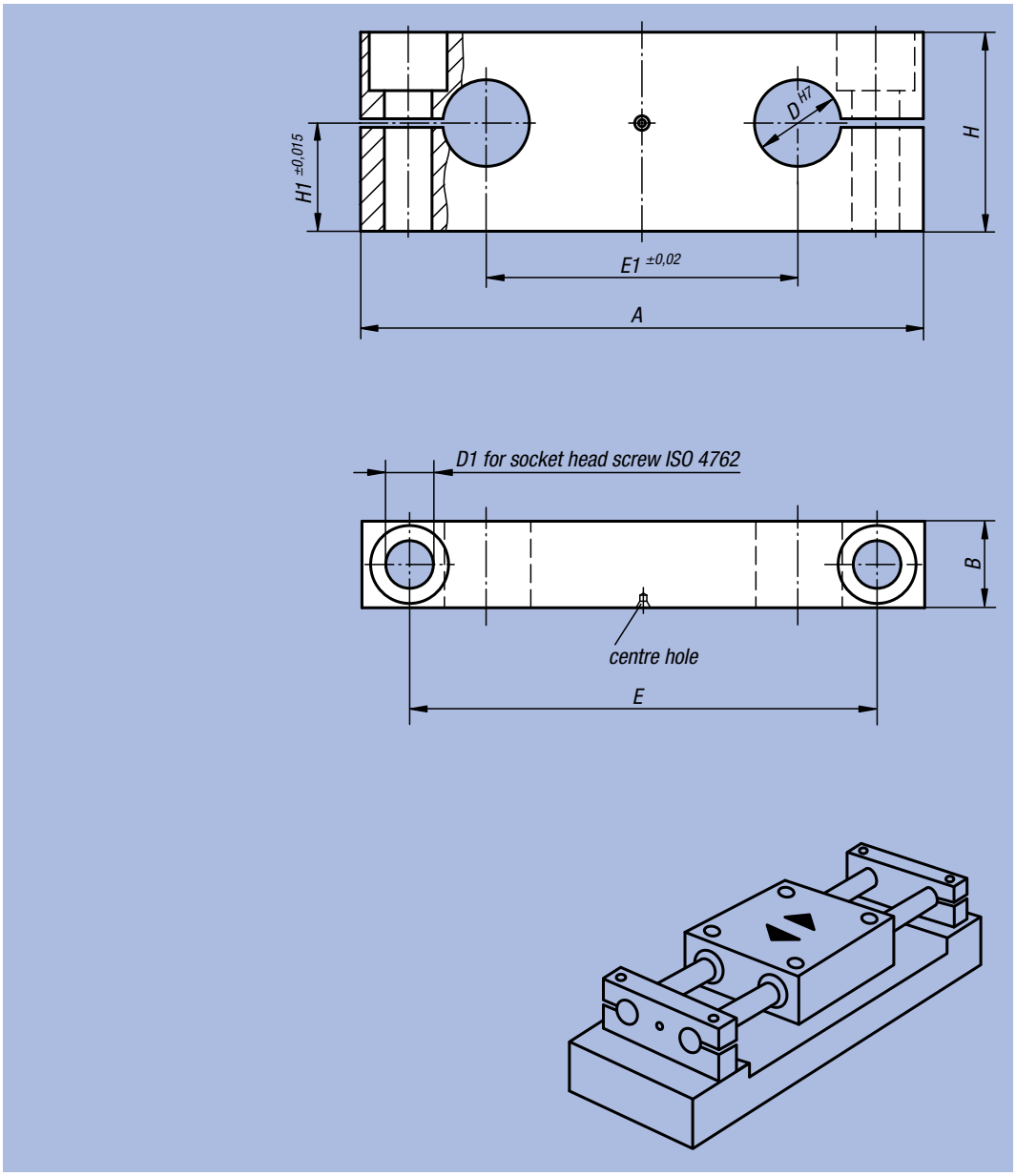

Order No.	A	B	D	D1	E	E1	H	H1	kg
21575-12	85	14	12	6,6	70	42	32	18	0,090
21575-16	100	18	16	9	82	54	36	20	0,140
21575-20	130	20	20	11	108	72	46	25	0,250
21575-25	160	25	25	13,5	132	88	56	30	0,470
21575-30	180	25	30	13,5	150	96	64	35	0,620

Traverses moveable



Material, surface finish:
Aluminium, natural finish

Sample order:
nlm 21577-12

Note:
Traverse with two location holes for easy and secure clamping and installation of the guide shafts. For the assembly of prefabricated table units with our Quadro 21550 or 21555 linear housing units.

In the case of a firmly installed linear bearing unit, this model permits a operation of the shafts with the traverses.

Accessory:
Precision Guide Shafts 21595.
Fastening screws 07160 or 07161.

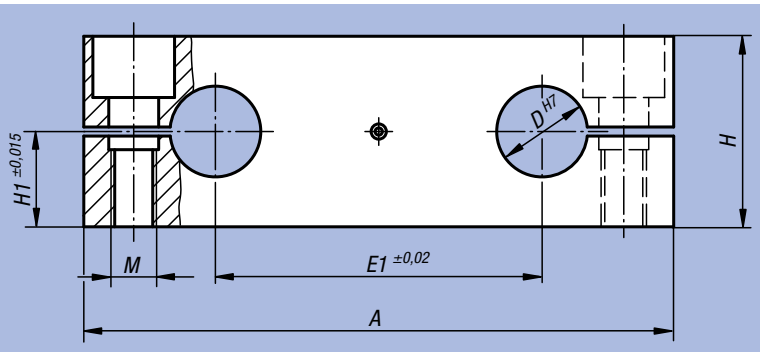

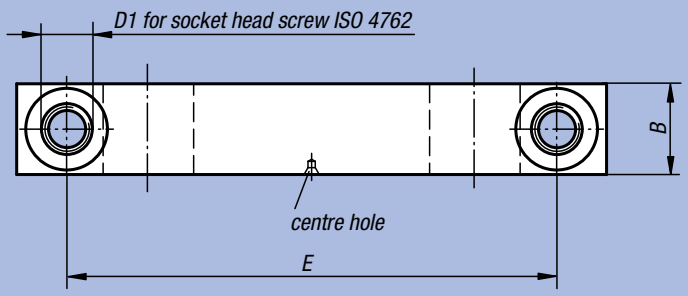

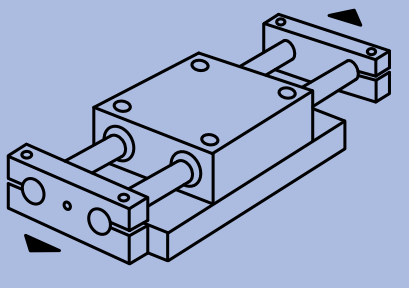

Order No.	A	B	D	E	E1	H	H1	M	kg
21577-12	85	14	12	70	42	28	14	M6	0,070
21577-16	100	18	16	82	54	32	16	M8	0,130
21577-20	130	20	20	108	72	42	21	M10	0,220
21577-25	160	25	25	132	88	52	26	M12	0,440
21577-30	180	25	30	150	96	58	29	M12	0,560

Shaft Bents



Material, surface finish:
Aluminium, natural finish

Sample order:
nlm 21580-12

Note:
Shaft bents with receiving hole for easy and secure clamping and installation of guide shafts.

Accessory:
Precision Guide Shafts 21595.
Fastening screws 07160 or 07161.

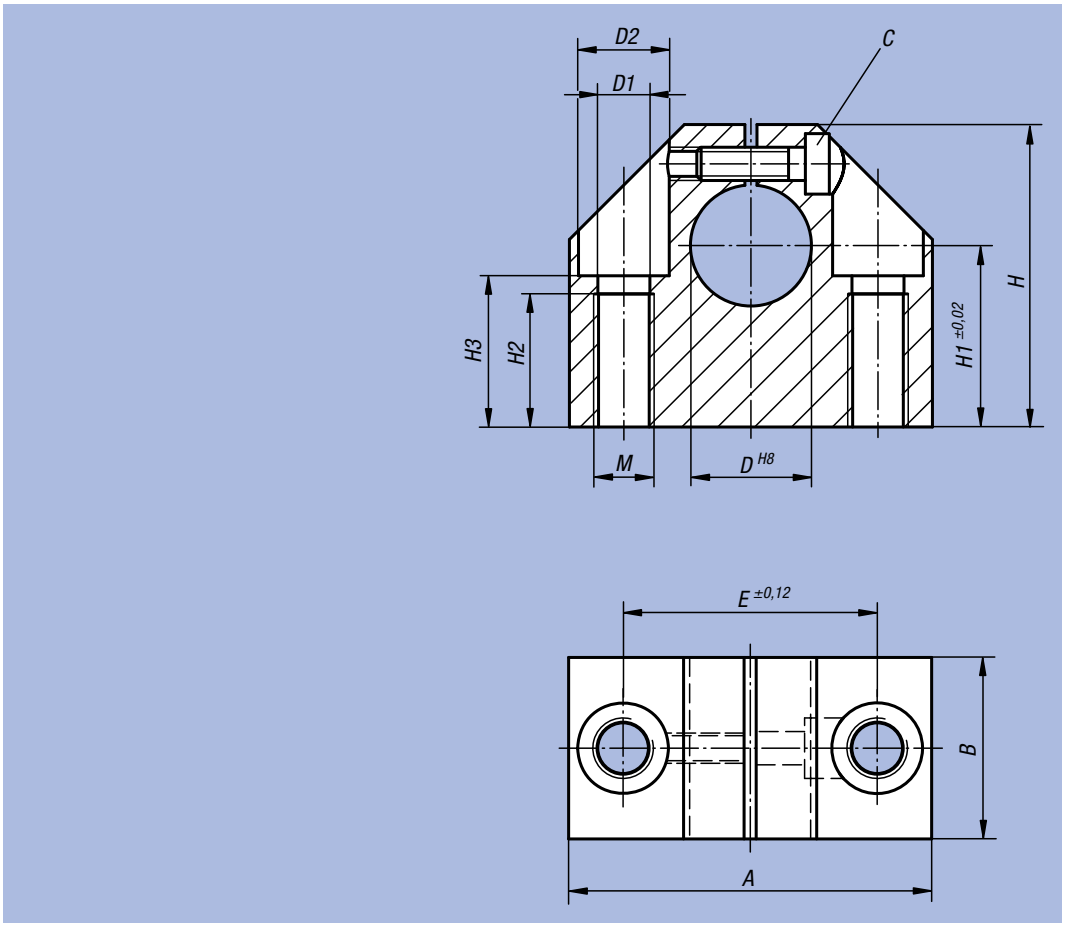

Order No.	A	B	D	D1	D2	E	H	H1	H2	H3	M	C (DIN 912)	kg
21580-12	43	20	12	5,2	10	30	35	20	13	16,5	M6	M4	0,100
21580-16	53	24	16	6,8	11	38	42	25	18	21	M8	M5	0,150
21580-20	60	30 -0,6	20	8,6	15	42	50 -0,6	30	22	25	M10	M6	0,230
21580-25	78	38	25	10,3	18	56	60	35	26	30	M12	M8	0,410
21580-30	87	40 -0,6	30	10,3	18	64	70 -0,6	40	26	34	M12	M8	0,530

Shaft Bents

Standard



Material, surface finish:
Aluminium, natural finish

Sample order:
nlm 21582-12

Note:
Shaft bents with receiving hole for easy and secure clamping and installation of guide shafts.

Accessory:
Precision Guide Shafts 21595.
Fastening screws 07160 or 07161.

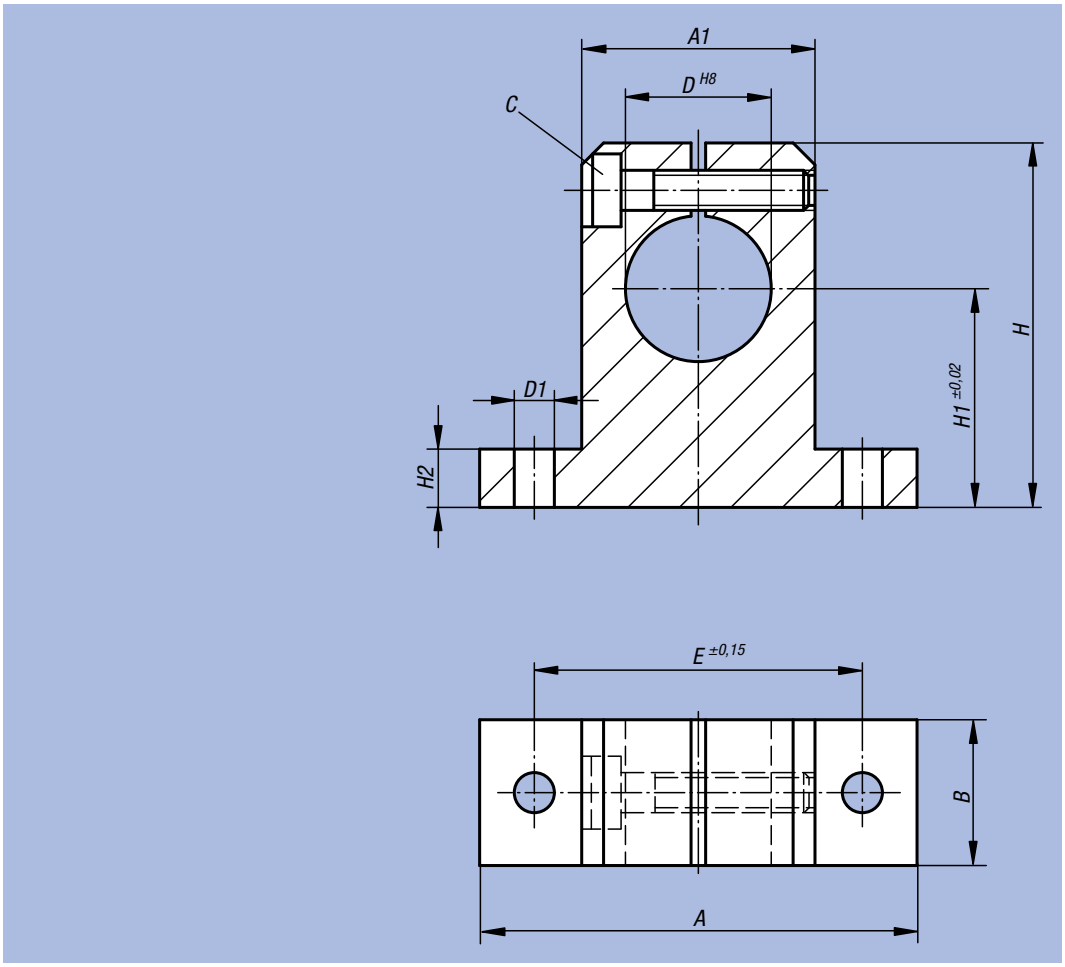

Order No.	A	A1	B	D	D1	E	H	H1	H2	C (DIN 912)	kg
21582-12	42	20	12	12	5,5	32	35	20	5,5	M4	0,020
21582-16	50	26	16	16	5,5	40	42	25	6,5	M4	0,030
21582-20	60	32	20	20	5,5	45	50	30	8	M4	0,070
21582-25	74	38	25	25	6,6	60	58	35	9	M5	0,140
21582-30	84	45	28	30	9	68	68	40	10	M6	0,200

Flange Shaft Bents



Material, surface finish:
Aluminium, natural finish

Sample order:
nlm 21585-12

Note:
Flange shaft bents with receiving hole for easy and secure clamping and installation of guide shafts.

Accessory:
Precision Guide Shafts 21595.
Fastening screws 07160 or 07161.

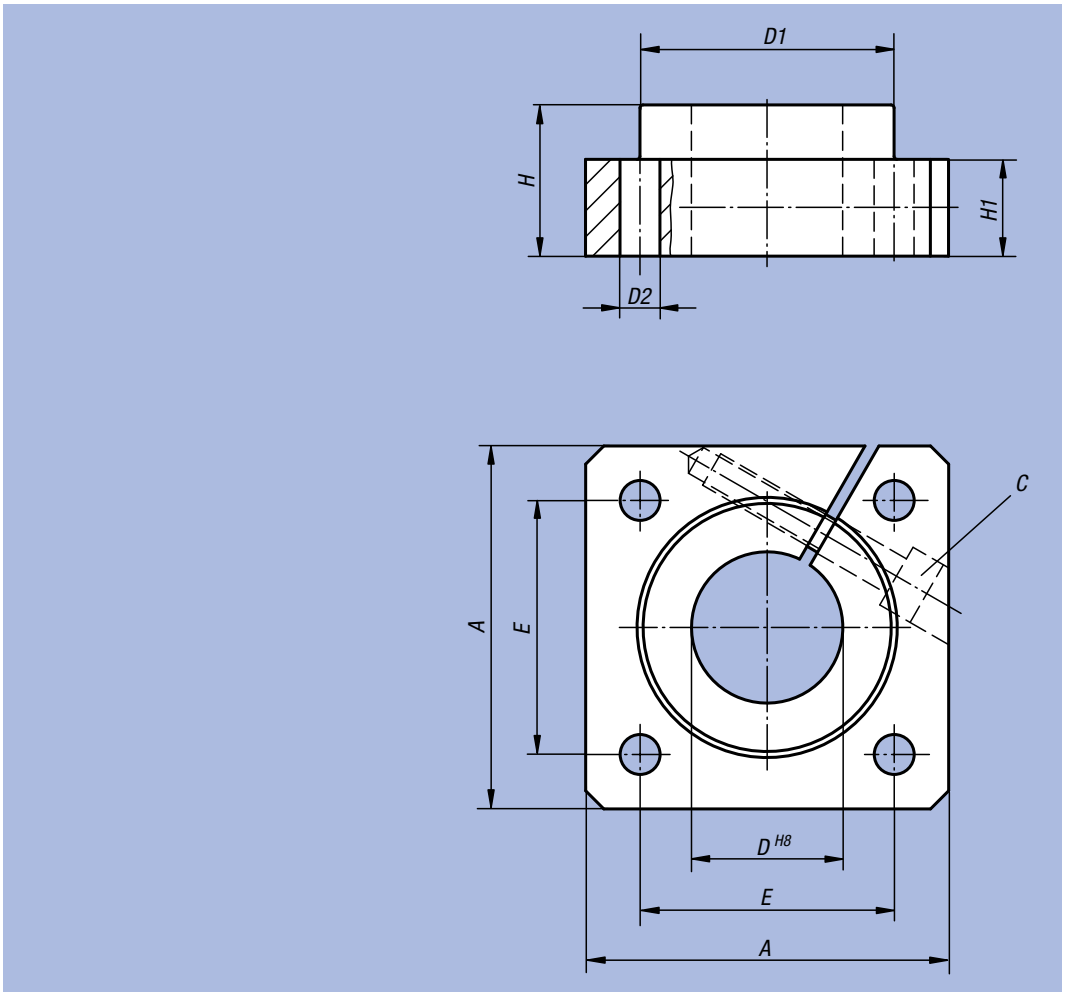

Order No.	A	D	D1	D2	E	H	H1	C (DIN 912)	kg
21585-12	40	12	23,5	5,5	30 ±0,12	20	12	M4	0,060
21585-16	50	16	27,5	5,5	35 ±0,12	20	12	M4	0,080
21585-20	50	20	33,5	6,6	38 ±0,15	23	14	M5	0,100
21585-25	60	25	42	6,6	42 ±0,15	25	16	M6	0,150
21585-30	70	30	49,5	9	54 ±0,25	30	19	M8	0,300

Precision Guide Shafts

with installation drill holes



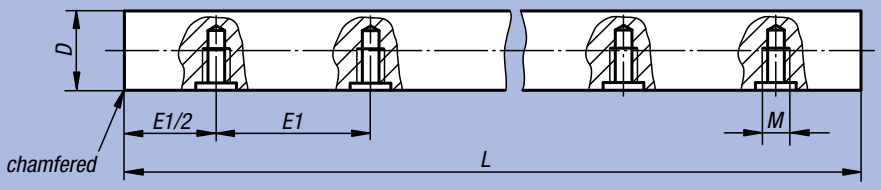

Material:
Steel 1.1213.
stainless steel 1.4034.

Surface finish:
Steel, ground.
Steel, ground and proportionally hard-chrome plated, chrome layer 5 - 10 µm.
Stainless steel, ground.

The precision steel shafts are in general inductively surface-hardened.

Sample order:
nlm 21590-012375X0600

Note:
The surface value obtained during the inductive hardening process guarantees high surface wear resistance.

Suitable for shaft supports 21565.

On request:
Lengths up to a max. 4000 mm.

Accessory:
Shaft supports 21565.

Order No.	Material	D	E1	L	M	Hardness penetration depth max.	Surface hardness HRC	kg/m
21590-012375X0600	steel	12 h6	75	600	M4	1,3	62 ±2	0,888
21590-016500X0600	steel	16 h6	100	600	M5	1,6	62 ±2	1,578
21590-020500X0600	steel	20 h6	100	600	M6	1,6	62 ±2	2,466
21590-025600X0600	steel	25 h6	120	600	M8	1,8	62 ±2	3,853
21590-030750X0600	steel	30 h6	150	600	M10	2	62 ±2	5,549
21590-112375X0600	steel hard-chrome plated	12 h7	75	600	M4	1,3	65 – 70	0,888
21590-116500X0600	steel hard-chrome plated	16 h7	100	600	M5	1,6	65 – 70	1,578
21590-120500X0600	steel hard-chrome plated	20 h7	100	600	M6	1,6	65 – 70	2,466
21590-125600X0600	steel hard-chrome plated	25 h7	120	600	M8	1,8	65 – 70	3,853
21590-130750X0600	steel hard-chrome plated	30 h7	150	600	M10	2	65 – 70	5,549
21590-212375X0600	stainless steel	12 h6	75	600	M4	1,3	51 – 55	0,888
21590-216500X0600	stainless steel	16 h6	100	600	M5	1,6	51 – 55	1,578
21590-220500X0600	stainless steel	20 h6	100	600	M6	1,8	51 – 55	2,466
21590-225600X0600	stainless steel	25 h6	120	600	M8	2	51 – 55	3,853
21590-230750X0600	stainless steel	30 h6	150	600	M10	2,4	51 – 55	5,549

Precision Guide Shafts



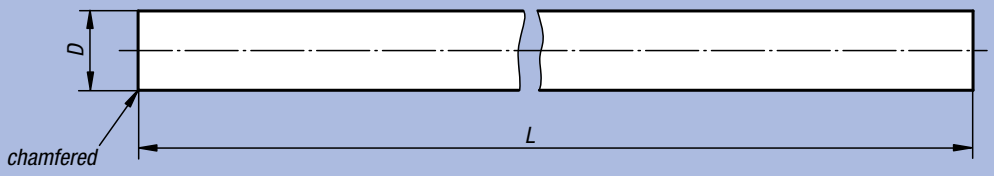

Material:
Steel 1.1213;
stainless steel 1.4034.

Surface finish:
Steel, ground.
Steel, ground and proportionally hard-chrome plated, chrome layer 5 - 10 µm.
Stainless steel, ground.

The precision steel shafts are in general inductively surface-hardened.

Sample order:
nlm 21595-012X1000

Note:
The surface value obtained during the inductive hardening process guarantees high surface wear resistance.

On request:
Processing of the ends and cylindrical lateral areas according to customer design.
Lengths up to a max. 4000 mm.

Machining examples:

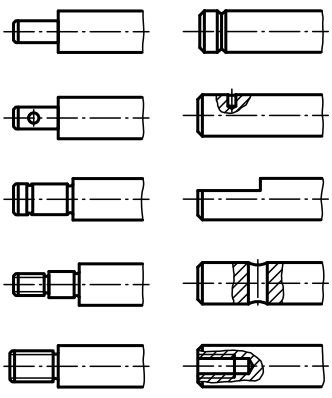

Order No.	Material	D	L	Hardness penetration depth max.	Surface hardness HRC	kg/m
21595-012X1000	steel	12 h6	1000	1,3	62 ±2	0,888
21595-016X1000	steel	16 h6	1000	1,6	62 ±2	1,578
21595-020X1000	steel	20 h6	1000	1,6	62 ±2	2,466
21595-025X1000	steel	25 h6	1000	1,8	62 ±2	3,853
21595-030X1000	steel	30 h6	1000	2	62 ±2	5,549
21595-112X1000	steel hard-chrome plated	12 h7	1000	1,3	65 – 70	0,888
21595-116X1000	steel hard-chrome plated	16 h7	1000	1,6	65 – 70	1,578
21595-120X1000	steel hard-chrome plated	20 h7	1000	1,6	65 – 70	2,466
21595-125X1000	steel hard-chrome plated	25 h7	1000	1,8	65 – 70	3,853
21595-130X1000	steel hard-chrome plated	30 h7	1000	2	65 – 70	5,549
21595-212X1000	stainless steel	12 h6	1000	1,3	51 – 55	0,888
21595-216X1000	stainless steel	16 h6	1000	1,6	51 – 55	1,578
21595-220X1000	stainless steel	20 h6	1000	1,8	51 – 55	2,466
21595-225X1000	stainless steel	25 h6	1000	2	51 – 55	3,853
21595-230X1000	stainless steel	30 h6	1000	2,4	51 – 55	5,549

Scales in stainless steel

self-adhesive

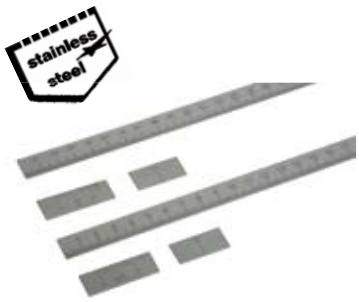

Material:
Stainless steel 1.4301

Surface finish:
Natural finish

Sample order:
nlm 21880-000010X0300
(please also indicate dimension L)

Note:
Scales of stainless steel in a rigid design with self-adhesive rear side. Cross-section 15 x 1 mm.

Matte surface and black high-contrast graduations. The graduations are deeply cut with lasers.

On request:
– Zero point lower-right or centre
– Graduations upper-right or on both sides
– Other lengths

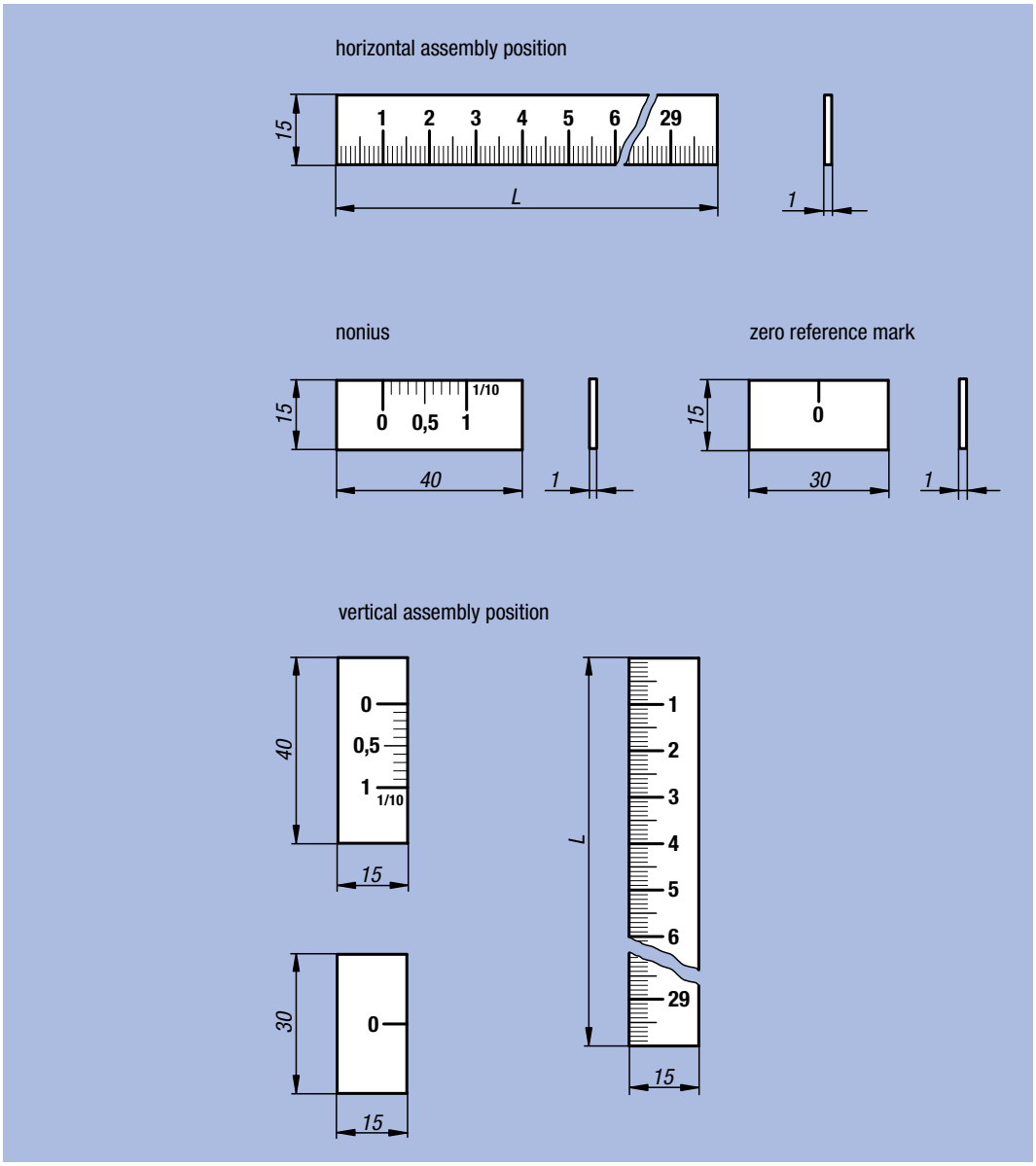

Scales in stainless steel, self-adhesive

Order No.	Surface finish	Assembly position	Zero point	Division	Graduation	L
21880-000010X	scale	horizontal	left	1 mm	lower	300 / 500 / 700 / 1000
21880-010010X	scale	vertical	upper	1 mm	left	300 / 500 / 700 / 1000

Nonius and zero reference marks in stainless steel, self-adhesive

Order No.	Surface finish	Assembly position	Zero point	Graduation
21880-0001	nonius	horizontal	left	upper
21880-0101	nonius	vertical	upper	right
21880-00	zero reference mark	horizontal	-	-
21880-01	zero reference mark	vertical	-	-

Scales in aluminium

self adhesive or with holes



Material:
Aluminium

Surface finish:
Black anodized

Sample order:
nlm 21882-000010X0250
(please also indicate dimension L)

Note:
Scales of aluminium in a rigid design with self-adhesive rear side or with boreholes. Cross-section 15 x 2 mm.

Readable without shading due to black anodized surface and high-contrast graduations. The graduations are deeply cut with lasers.

On request:
– Zero point lower-right or centre
– Graduations upper-right or on both sides
– Other lengths

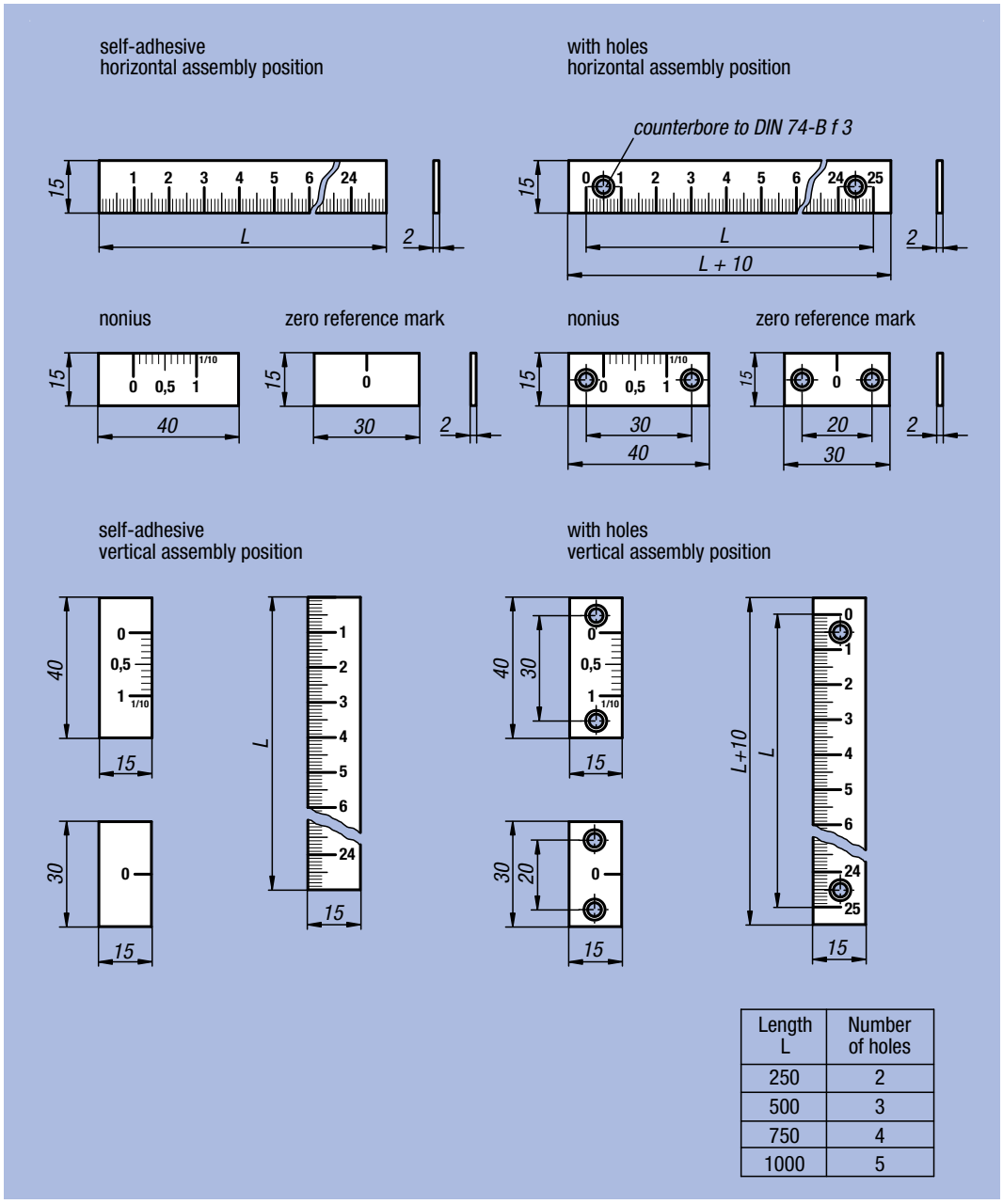

Length L	Number of holes
250	2
500	3
750	4
1000	5

Scales in aluminium, self adhesive or with holes

Order No. Surface finish self adhesive	Order No. Surface finish with holes	Surface finish	Assembly position	Zero point	Division	Graduation	L
21882-000010X	21882-100010X	scale	horizontal	left	1 mm	lower	250 / 500 / 750 / 1000
21882-010010X	21882-110010X	scale	vertical	upper	1 mm	left	250 / 500 / 750 / 1000

Nonius and zero reference marks in aluminium, self adhesive or with holes

Order No. Surface finish self adhesive	Order No. Surface finish with holes	Surface finish	Assembly position	Zero point	Graduation
21882-0001	21882-1001	nonius	horizontal	left	upper
21882-0101	21882-1101	nonius	vertical	upper	right
21882-00	21882-10	zero reference mark	horizontal	-	-
21882-01	21882-11	zero reference mark	vertical	-	-

Scales in aluminium

self adhesive or with holes



Material:
Aluminium

Surface finish:
Scale surface ground and black anodized

Sample order:
nlm 21884-000010X0500
(please also indicate dimension L)

Note:
Scales of aluminium in a rigid, heavy duty design. Cross-section 30 x 6 mm.

Readable without shading due to black anodized surface and high-contrast graduations. The graduations are deeply cut with lasers.

On request:
– Zero point right or centre
– Graduations at the top or on both sides
– Other lengths

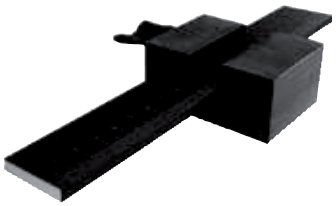

self-adhesive

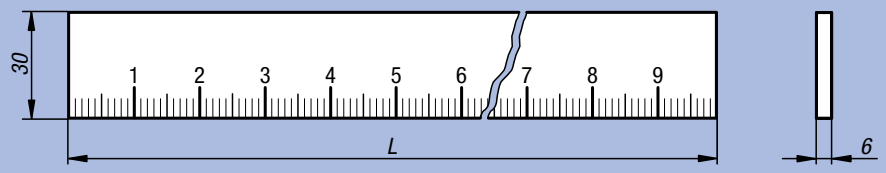

with holes

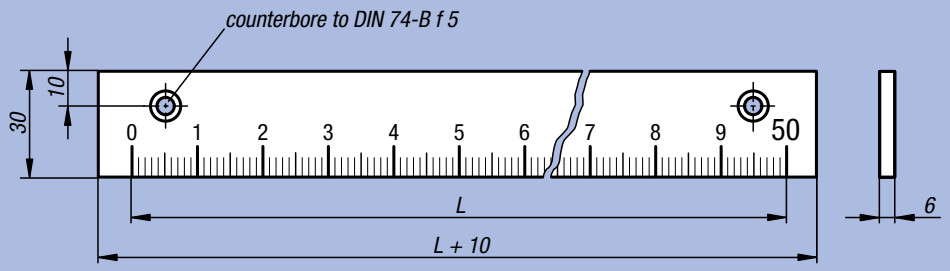

Length L	Number of holes
500	2
1000	3

Order No. Surface finish self adhesive	Order No. Surface finish with holes	Assembly position	Zero point	Division	Graduation	L
21884-000010X	21884-100010X	horizontal	left	1 mm	lower	500 / 1000

Digital Position Indicators



Material, surface finish:
Housing polyamide 6, impact-resistant;
hollow shaft in steel, black oxide finish;
viewing window plastic;
grub screw steel, black;
counter dials black, figures white

Sample order:
nlm 21901-01001111
(Position indicator with 1 mm pitch, decimal point in first position from the right, assembly position 1, direction of count ascending clockwise, colour orange)

Note:
Digital Position Indicators allows direct reading off of input measurement values at a glance.
In addition the value indicated per spindle rotation (corresponding spindle pitch) can be selected and the various indicator values can be operated by a transmission gear. The Position Indicators are distinguished by their small construction with very clear display.
They are especially suitable for small spindle distances and small shaft diameters and they have a torque support that is located in a drillhole on the other side.

** At the 1st asterisk give assembly position and at the 2nd asterisk give the count direction (see sample order „assembly position, count direction“).

Technical Data:
– Counter consisting of 3 10-position dials
– Height of figures about 4 mm
– Hollow shaft Ø 10 H7 mm
– Temperature resistant to 80 °C
– Oil and solvent resistant

On request:
– Stainless steel driveshaft
– Indicator for inch

Accessory:
– Reducing Bushes 21940

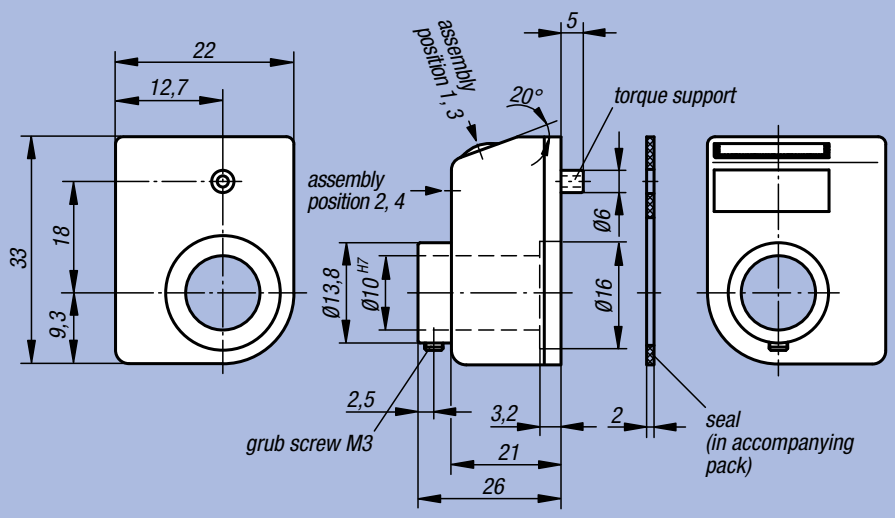

Indicator after one rotation decimal point position:	Assembly position (1 - 4):
	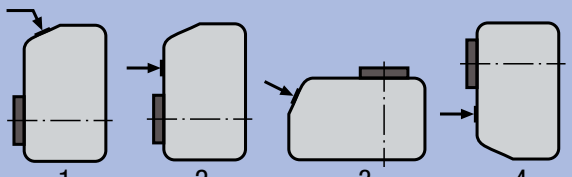
e. g. 21901-**01001**111 **0100** = 1mm pitch **1** = decimal point at the 1st position from the right	e. g. 21901-0100**1**111 **1** = assembly position

Count direction (1 - 2):	Colour (1 - 2):
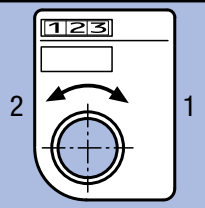	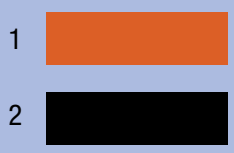
e. g. 21901-0100111**1** **1** = clockwise (ascending values) **2** = anticlockwise (ascending values)	e. g. 21901-0100111**1** **1** = orange **2** = black

Order No. Colour orange	Order No. Colour black	Pitch	Indicator after one rotation	Decimal point in position	Revolutions per minute max.	kg
21901-01001**1	21901-01001**2	1	01,0	1	1500	0,020
21901-02001**1	21901-02001**2	2	02,0	1	750	0,020
21901-02501**1	21901-02501**2	2,5	02,5	1	600	0,020
21901-03001**1	21901-03001**2	3	03,0	1	500	0,020
21901-04001**1	21901-04001**2	4	04,0	1	375	0,020
21901-05001**1	21901-05001**2	5	05,0	1	300	0,020
21901-06001**1	21901-06001**2	6	06,0	1	250	0,020
21901-08001**1	21901-08001**2	8	08,0	1	180	0,020
21901-10001**1	21901-10001**2	10	10,0	1	150	0,020

Digital Position Indicators



Material, surface finish:
Housing polyamide 6, impact-resistant;
hollow shaft steel, black oxide finish;
viewing window plastic;
grub screw steel, black;
counter dials black, figures white

Sample order:
nlm 21902-01002111
(Position indicator with 1 mm pitch, decimal point in second position from the right, assembly position 1, direction of count ascending clockwise, colour orange)

Note:
Digital Position Indicators allows direct reading off of input measurement values at a glance.
In addition the value indicated per spindle rotation (corresponding spindle pitch) can be selected and the various indicator values can be operated by a transmission gear. The Position Indicators are distinguished by their small construction with very clear display and fine scale.
They are especially suitable for small spindle distances and small shaft diameters and they have a torque support that is located in a drillhole on the other side.

** At the 1st asterisk give assembly position and at the 2nd asterisk give the count direction (see sample order „assembly position, count direction“).

Technical Data:
– Counter consisting of 4 10-position dials + fine scale
– Height of figures about 6 mm
– Hollow shaft Ø 14 H7 mm
– Temperature resistant to 80 °C
– Oil and solvent resistant

On request:
– Counter cover made of mineral glass
– Stainless steel driveshaft
– Axial sealing (dust-proof)
– Vibration protection

Accessory:
– Reducing Bushes 21940
– Insert plate 21942
– Mounting plates 21944

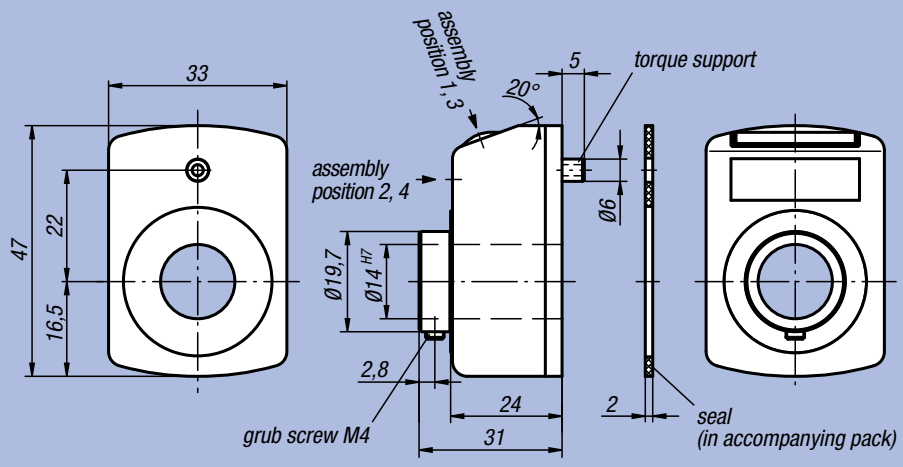

Indicator after one rotation decimal point position:	Assembly position (1 - 4):
	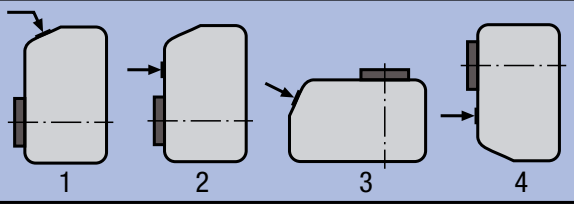
e. g. 21902-**01002**111 **0100** = 1 mm pitch **2** = decimal point at the 2nd position from the right	e. g. 21902-0100**2**111 **1** = assembly position

Count direction (1 - 2):	Colour (1 - 2):
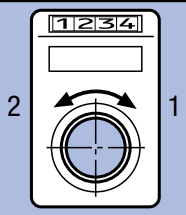	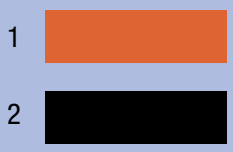
e. g. 21902-0100211**1** **1** = clockwise (ascending values) **2** = anticlockwise (ascending values)	e. g. 21902-0100211**1** **1** = orange **2** = black

Order No. Colour orange	Order No. Colour black	Pitch	Indicator after one rotation	Decimal point in position	Revolutions per minute max.	kg
21902-01002**1	21902-01002**2	1	00,10	2	1500	0,050
21902-01001**1	21902-01001**2	1	001,0	1	1500	0,050
21902-01251**1	21902-01251**2	1,25	001,2/5	1	1200	0,050
21902-01501**1	21902-01501**2	1,5	001,5	1	1000	0,050
21902-02001**1	21902-02001**2	2	002,0	1	750	0,050
21902-02501**1	21902-02501**2	2,5	002,5	1	600	0,050
21902-03001**1	21902-03001**2	3	003,0	1	500	0,050
21902-04001**1	21902-04001**2	4	004,0	1	375	0,050
21902-05001**1	21902-05001**2	5	005,0	1	300	0,050
21902-06001**1	21902-06001**2	6	006,0	1	250	0,050
21902-08001**1	21902-08001**2	8	008,0	1	180	0,050
21902-10001**1	21902-10001**2	10	010,0	1	150	0,050

Digital Position Indicators



Material, surface finish:
Housing polyamide 6, impact-resistant;
hollow shaft steel, black oxide finish;
viewing window plastic;
grub screw steel, black;
counter dials black, figures white

Sample order:
nlm 21904-01002111
(Position indicator with 1 mm pitch, decimal point in second position from the right, assembly position 1, direction of count ascending clockwise, colour orange)

Note:
Digital Position Indicators allows direct reading off of input measurement values at a glance.
In addition the value indicated per spindle rotation (corresponding spindle pitch) can be selected and the various indicator values can be operated by a transmission gear.
The Position Indicators are distinguished by their very clear display and fine scale. They have a torque support that is located in a drillhole on the other side.

** At the 1st asterisk give assembly position and at the 2nd asterisk give the count direction (see sample order „assembly position, count direction“)

Technical Data:
– Counter consisting of 5 10-position dials + fine scale
– Height of figures about 7 mm
– Hollow shaft Ø 20 H7 mm
– Temperature resistant to 80 °C
– Oil and solvent resistant
– Dust-proof

On request:
– Counter cover made of mineral glass
– Stainless steel driveshaft
– Axial sealing (dust-proof)
– Waterproof
– Vibration protection

Accessory:
– Reducing Bushes 21940
– Insert plate 21942
– Mounting plates 21944

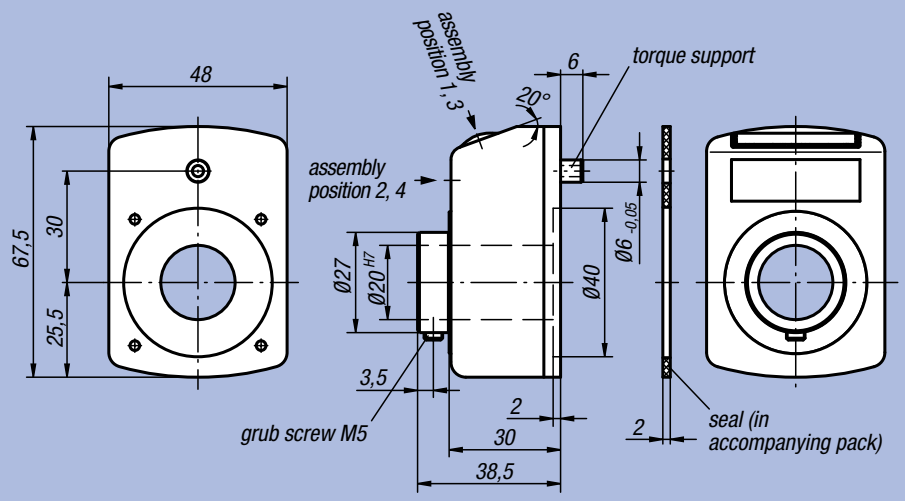

Indicator after one rotation decimal point position:	Assembly position (1 - 4):
	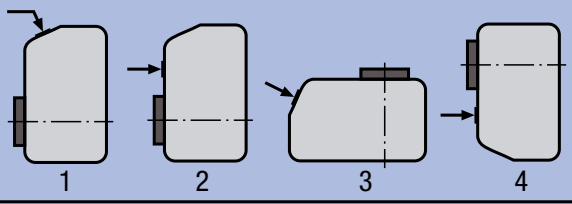
e. g. 21904-**01002**111 **0100** = 1 mm pitch **2** = decimal point at the 2nd position from the right	e. g. 21904-0100**2**111 **1** = assembly position

Count direction (1 - 2):	Colour (1 - 2):
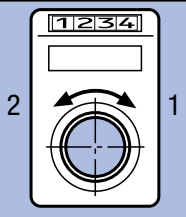	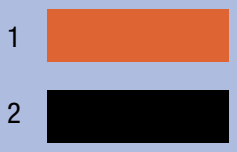
e. g. 21904-0100211**1** **1** = clockwise (ascending values) **2** = anticlockwise (ascending values)	e. g. 21904-0100211**1** **1** = orange **2** = black

Order No. Colour orange	Order No. Colour black	Pitch	Indicator after one rotation	Decimal point in position	Revolutions per minute max.	kg
21904-01002**1	21904-01002**2	1	000,10	2	1500	0,100
21904-01001**1	21904-01001**2	1	0001,0	1	1500	0,100
21904-01501**1	21904-01501**2	1,5	0001,5	1	1000	0,100
21904-02001**1	21904-02001**2	2	0002,0	1	750	0,100
21904-02501**1	21904-02501**2	2,5	0002,5	1	600	0,100
21904-03001**1	21904-03001**2	3	0003,0	1	500	0,100
21904-04001**1	21904-04001**2	4	0004,0	1	450	0,100
21904-05001**1	21904-05001**2	5	0005,0	1	300	0,100
21904-06001**1	21904-06001**2	6	0006,0	1	250	0,100
21904-10001**1	21904-10001**2	10	0010,0	1	150	0,100

Position Indicator

freely programmable



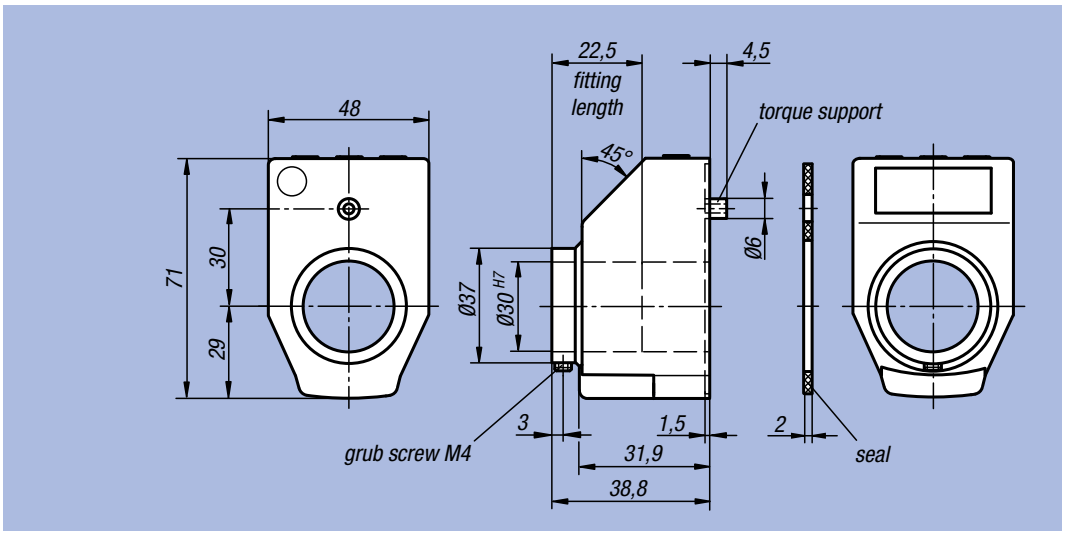

Material, surface finish:
Housing plastic;
tubular shaft steel, black oxide finish;
view window, LCD display;
grub screw steel, black

Sample order programmed:
nlm 21922-0200021120
(see ordering example on the next page)

Sample order not programmed:
nlm 21922-12
(Position indicator with assembly position 1, colour black)

Note:
The electronic position indicators offer diverse opportunities compared to mechanical position indicators because they display angles as well as uncommon spindle pitches and record each fraction of spindle movement.

* Freely programmable parameters using the programming software 21922-09.

Technical Data:
– LCD Display with 5 digits
– Digit size approx. 11.5 mm
– Display range from -19999 ... 99999
– Tunular shaft Ø 30 H7 mm
– Operating temperature
-10 °C to +60 °C
– Storage temperature
-30 °C to +80 °C
– Revolution max. 600 rpm
– Lithium battery Button cell 3V, type CR 2032. service life approx. 6 years
– Vibration-resistance according to DIN IEC 68-2-6
10 g / (5 ... 150 Hz),
20 g / (100 ... 2000 Hz)
– Shock-resistance according to DIN IEC 68-2-27 30 g / 15 ms
– EMC DIN EN 61000-4-2;
DIN EN 61000-4-4
– Type of protection IP 51

Features:
– indicated value and decimal point freely programmable
– linear or angle mode
– function key for zero-point position
– function key for switching between the absolute dimension and chain dimension
– programming of an offset value directly at the device
– easy battery change

Accessory:
– reducing bushes 21940
– programming software 21922-09

Position indicators programmed

Order No.	Surface finish
21922-	see ordering example on the next page

Position Indicators not programmed*

Order No.	Colour	Assembly position	Pitch	Indicator after one rotation	Decimal point in position	Count direction	Zero-point position	Order No. software
21922-12	black	1	freely programmable	freely programmable	freely programmable	freely programmable	freely programmable	21922-09
21922-32	black	3						21922-09
21922-13	red	1						21922-09
21922-33	red	3						21922-09

Sample order for Position Indicators programmed

Order code:

21922-_ _ _ _ _

Indicator after one rotation:

e.g. 21922-**02000**21120

Please indicate here which value is to be displayed after one rotation (this is usually the spindle pitch).

Important:
Please note the decimal point position!



Angle mode:
(resolution 0.1°)
If you want the display to be in angle mode, enter 03600.

The display in angle mode is 03600 after one rotation and will again at 00000 for the next rotation.

Decimal point position:

e.g. 21922-0200**0**21120

Please indicate here in which place you want to have the decimal point.

0 = 00000
1 = 0000.0
2 = 000.00
3 = 00.000



Angle mode:
If you want angle mode as display, the decimal point is best put in position 1.

This gives you the value 0360.0 after one rotation.

Assembly position:

e.g. 21922-0200**0**1120

1 = Mounting position for horizontal spindle
3 = Mounting position for vertical spindle

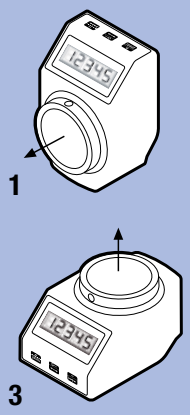

Count direction:

e.g. 21922-020002**1**120

1 = clockwise (ascending values)
2 = anticlockwise (ascending values)

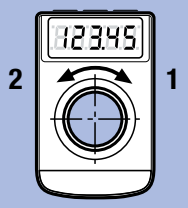

Colour:

e.g. 21922-0200021**1**20

2 = black
3 = red



Zero-point position:

e.g. 21922-020002112**0**

0 = directly
5 = delayed by 5 sec.

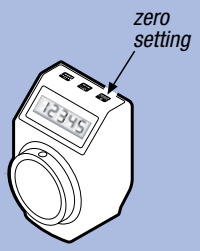

The Zero-point position can be delayed by 5 sec. by means of a parameter, in order to avoid accidental zero setting.

Application using Position Indicators







Reducing Bushes



Material, surface finish:
Steel, black oxide finish

Sample order:
nlm 21940-1410

Note:
Reducing Bushes are used for the adjustment of diameter between position indicator and displacement spindle.

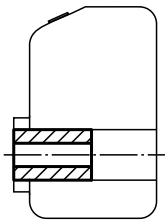

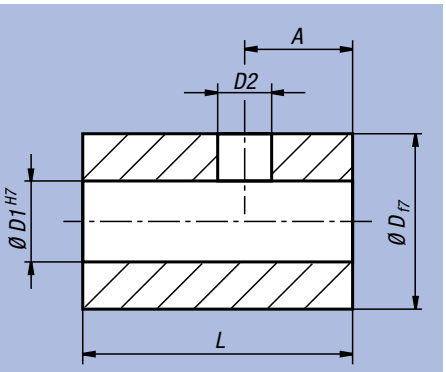

Order No.	A	D	D1	D2	L	Suitable for Position Indicator
21940-1006	2,5	10	6	3,2	14	21901
21940-1008	2,5	10	8	3,2	14	21901
21940-1406	3,5	14	6	4,2	17	21902, 21950, 21952
21940-1408	3,5	14	8	4,2	17	21902, 21950, 21952
21940-1410	3,5	14	10	4,2	17	21902, 21950, 21952
21940-1412	3,5	14	12	4,2	17	21902, 21950, 21952
21940-2012	4,5	20	12	5,5	20	21904
21940-2014	4,5	20	14	5,5	20	21904
21940-2016	4,5	20	16	5,5	20	21904
21940-2018	4,5	20	18	5,5	20	21904
21940-3012	4	30	12	5,5	30	21922
21940-3014	4	30	14	5,5	30	21922
21940-3016	4	30	16	5,5	30	21922
21940-3018	4	30	18	5,5	30	21922
21940-3020	4	30	20	5,5	30	21922
21940-3025	4	30	25	5,5	30	21922

Insert Plates



Material, surface finish:
Plastic

Sample order:
nlm 21942-041

Note:
Insert Plates are used for the attachment of adjusting rings and radial shaft seals.

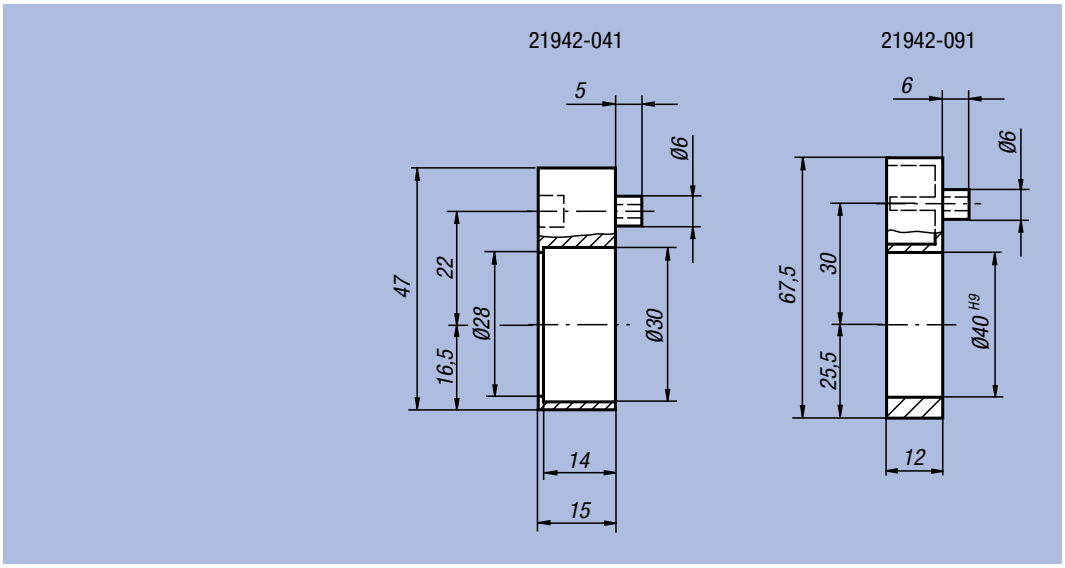

Order No.	Suitable for Position Indicator	kg
21942-041	21902	0,009
21942-091	21904	0,013

Notes:

Mounting Plates



Material, surface finish:
Housing aluminium anodized; clamp lever in anthracite grey thermoplastic

Sample order:
nlm 21944-09121

Note:
Mounting Plates form a compact unit in combination with position indicators. They guarantee reliable spindle clamping without additional construction work.
Because of simple mounting as an insertion plate, the mounting plate is also very suitable for subsequent fitting out of existing equipment.
By squeezing the bush, the diameter for the torque support can be expanded from Ø6.2 to Ø10.1.

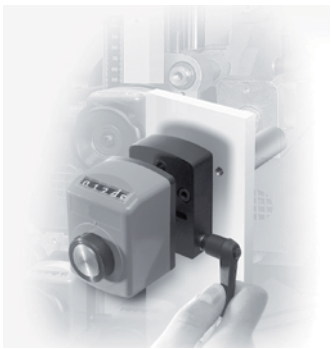

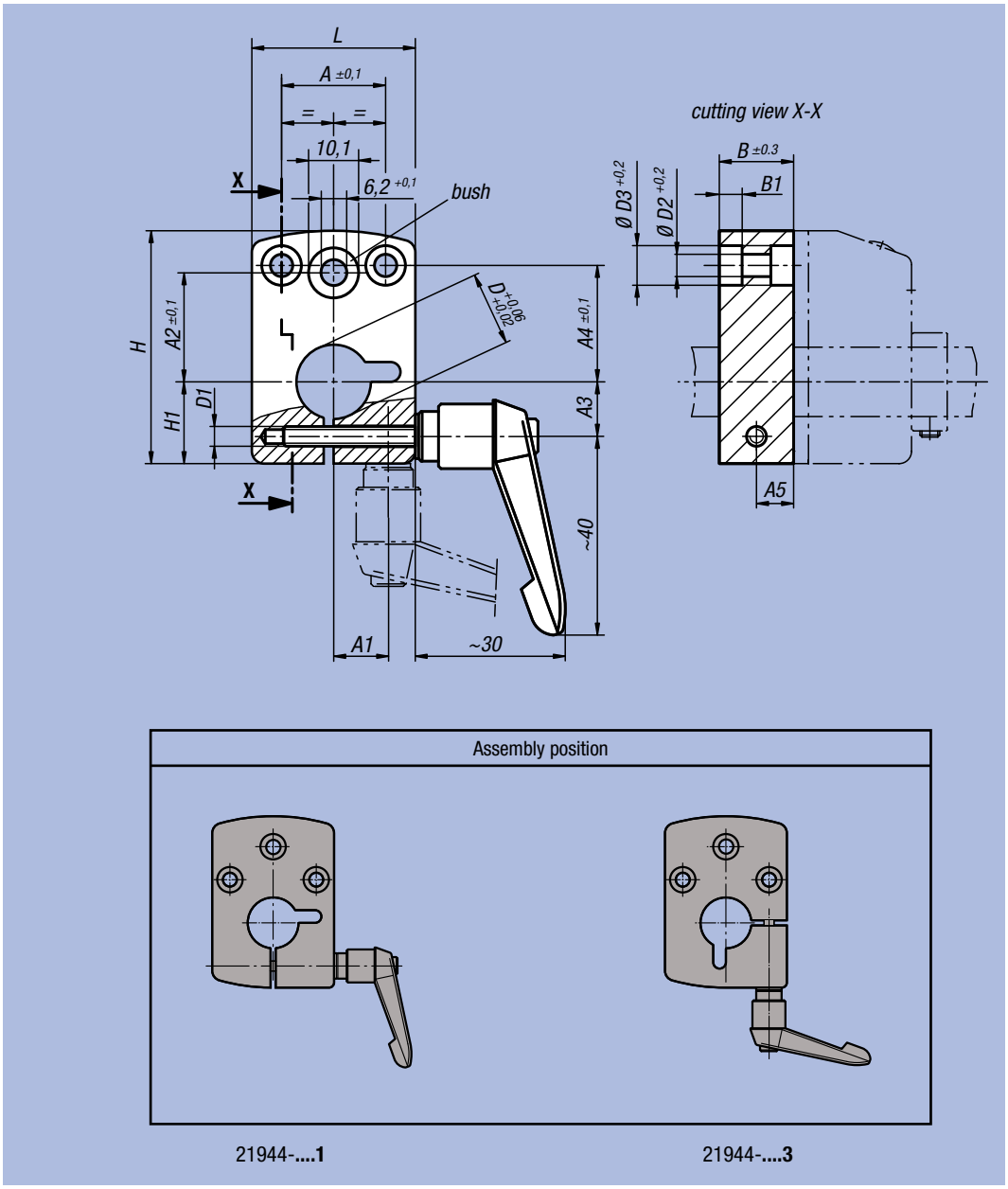

Order No. Surface finish assembly position 1	Order No. Surface finish assembly position 3	A	A1	A2	A3	A4	A5	B	B1	D	D1	D2	D3	H	H1	L	Suitable for Position Indicator
21944-04081	21944-04083	21	11	22	11	23,5	7,5	15	4,6	8	M4	4,5	8	47	16,5	33	21902
21944-04101	21944-04103	21	11	22	11	23,5	7,5	15	4,6	10	M4	4,5	8	47	16,5	33	21902
21944-04121	21944-04123	21	11	22	11	23,5	7,5	15	4,6	12	M4	4,5	8	47	16,5	33	21902
21944-04141	21944-04143	21	11	22	11	23,5	7,5	15	4,6	14	M4	4,5	8	47	16,5	33	21902
21944-09121	21944-09123	34	17	30	17	17	10	20	5,5	12	M5	5,5	10	67,5	25,5	48	21904
21944-09141	21944-09143	34	17	30	17	17	10	20	5,5	14	M5	5,5	10	67,5	25,5	48	21904
21944-09161	21944-09163	34	17	30	17	17	10	20	5,5	16	M5	5,5	10	67,5	25,5	48	21904
21944-09181	21944-09183	34	17	30	17	17	10	20	5,5	18	M5	5,5	10	67,5	25,5	48	21904
21944-09201	21944-09203	34	17	30	17	17	10	20	5,5	20	M5	5,5	10	67,5	25,5	48	21904

Adjusting Knobs with position indicator

analogue display



Material, surface finish:
Housing glass-fibre reinforced plastic; hollow shaft steel, black oxide finish; viewing window plastic

Sample order:
nlm 21950-02112
(Adjusting knob with transmission ratio 1:2, torque support at 270°, direction of count ascending clockwise, colour black)

Note:
Adjusting knobs with integrated position indicators allow direct readout of set measurement values such as lengths, flow rates, speeds, etc, at a glance. The torque support allows the use of the adjusting knobs in any assembly position, even in case of high vibrations.

** At the 1st asterisk give torque support and at the 2nd asterisk give the count direction (see sample order „torque support, count direction“).

Technical Data:
– Hollow shaft Ø 14 H7 mm
– Temperature resistant to 80 °C
– Oil and solvent resistant

On request:
– Other transmission ratios

Accessory:
– Reducing Bushes 21940

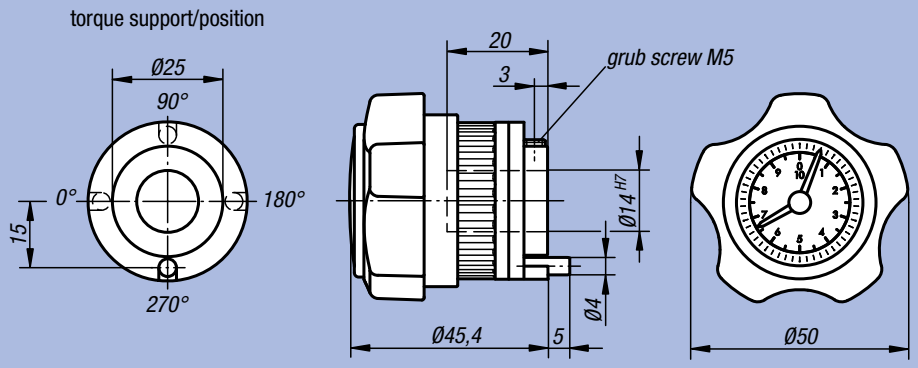

Transmission ratio:

order number	for transmission ratio
02	1:2
12	1:12
24	1:24
48	1:48

The transmission ratio indicates how many spindle rotations (black pointer) are necessary for one rotation of the smaller, red pointer (while the longer, black pointer indicates the rotational movement of the spindle 1:1, i.e., 1 spindle rotation = 1 pointer rotation, the smaller, red pointer carries out only a fraction, defined by the transmission ratio, of the rotational motion).

e.g. 21955-**02**112
02 = transmission ratio 1:2

torque support (1 - 4):

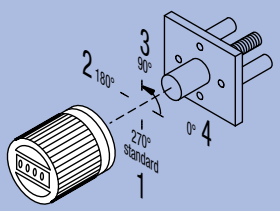

e.g. 21950-02**1**12
1 = 270° (standard)

count direction (1 - 2):

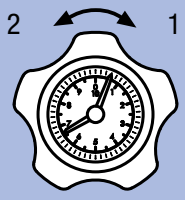

e.g. 21950-021**1**2
1 = clockwise (ascending values)
2 = anticlockwise (ascending values)

colour (1 - 2):

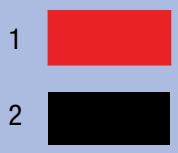

e.g. 21950-0211**2**
1 = red
2 = black

Order No. Colour red	Order No. Colour black	Transmission ratio	kg
21950-02**1	21950-02**2	1:2	0,070
21950-12**1	21950-12**2	1:12	0,070
21950-24**1	21950-24**2	1:24	0,070
21950-48**1	21950-48**2	1:48	0,070

Adjusting Knobs with position indicator

digital display



Material, surface finish:
Housing glass-fibre reinforced plastic; hollow shaft steel, black oxide finish; viewing window plastic

Sample order:
nlm 21952-01501112
(Adjusting knob with 1.5 mm pitch, decimal point in first position from the right, torque support at 270°, direction of count ascending clockwise, colour black)

Note:
Adjusting knobs with integrated position indicators allow direct readout of set measurement values such as lengths, flow rates, speeds, etc, at a glance. In addition, the display value can be selected per spindle rotation (corresponding spindle pitch), with the different display values being realized by a variable ratio transmission. The torque support allows the use of the adjusting knobs in any assembly position, even in case of high vibrations.

** At the 1st asterisk give torque support and at the 2nd asterisk give the count direction (see sample order „torque support, count direction“).

Technical Data:
– Counter consisting of 4 10-position dials + fine scale
– Height of figures about 6 mm
– Hollow shaft Ø 14 H7 mm
– Temperature resistant to 80 °C
– Oil and solvent resistant

On request:
– Other pitches

Accessory:
– Reducing Bushes 21940

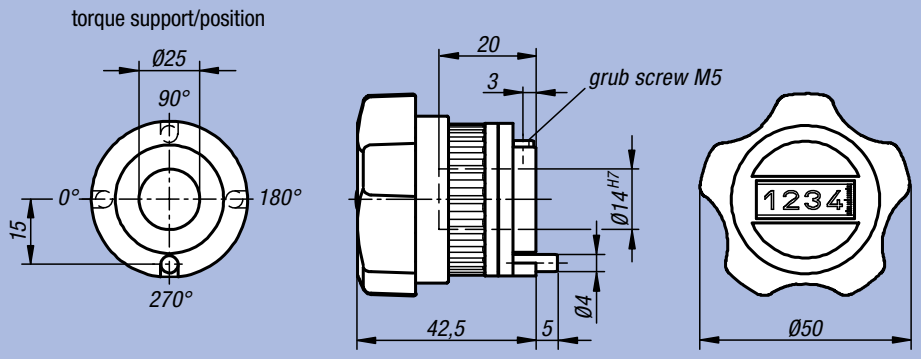

Indicator after one rotation, decimal point position:	Torque support (1 - 4):
	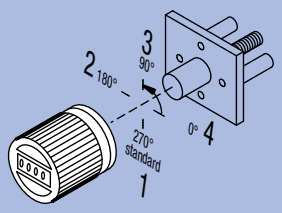
e. g. 21952-**01501**112 **0150** = 1.5 mm pitch **1** = decimal point at the 1st position from the right	e.g. 21952-01501**1**12 **1** = 270° (standard)

order number	for pitch	display presentation
0150	1.5	001,5
0200	2	002,0
0400	4	004,0
0500	5	005,0
1000	10	010,0

Count direction (1 - 2):	Colour (1 - 2):
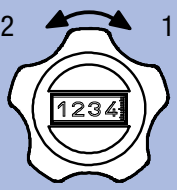	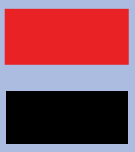
e.g. 21952-0150111**2** **1** = clockwise (ascending values) **2** = anticlockwise (ascending values)	e.g. 21952-0150111**2** **1** = red **2** = black

Order No. Colour red	Order No. Colour black	Pitch	Indicator after one rotation	Decimal point in position	kg
21952-01501**1	21952-01501**2	1,5	001,5	1	0,060
21952-02001**1	21952-02001**2	2	002,0	1	0,060
21952-04001**1	21952-04001**2	4	004,0	1	0,060
21952-05001**1	21952-05001**2	5	005,0	1	0,060
21952-10001**1	21952-10001**2	10	010,0	1	0,060

Position Indicators for handwheels

analogue display



Material, surface finish:
Housing glass-fibre reinforced plastic, black;
viewing window plastic, dust-proof

Sample order:
nlm 21960-500021

Note:
Position indicators are provided for installation in handwheels. They allow direct readout of set measurement values such as lengths, flow rates, speeds, etc, at a glance.
The measurement values are acquired according to the gravity principle.
Conceived for use on horizontal spindles.

The transmission ratio indicates how many spindle rotations (black pointer) are necessary for one rotation of the smaller, red pointer (while the longer, black pointer indicates the rotational movement of the spindle 1:1, i.e., 1 spindle rotation = 1 pointer rotation, the smaller, red pointer carries out only a fraction, defined by the transmission ratio, of the rotational motion).

On request:
– Other transmission ratios

Accessory:
– Handwheels 21970/21972

installation dimensions

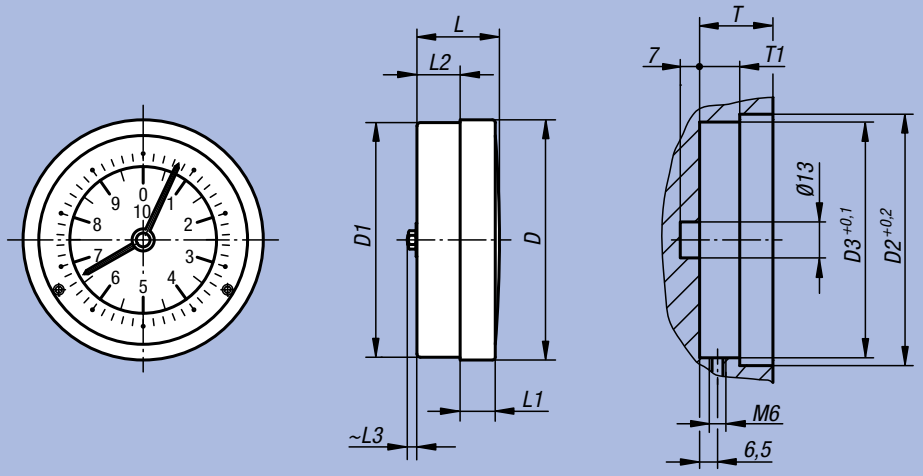

Order No.	Size	Transmission ratio	D	D1	D2	D3	L	L1	L2	L3	T	T1	Suitable for	kg
21960-500021	50	1:2	51,7	50,2	52	50,5	29,2	11,5	14,7	4,2	24	12,3	handwheel size 50	0,100
21960-500121	50	1:12	51,7	50,2	52	50,5	29,2	11,5	14,7	4,2	24	12,3	handwheel size 50	0,100
21960-500241	50	1:24	51,7	50,2	52	50,5	29,2	11,5	14,7	4,2	24	12,3	handwheel size 50	0,100
21960-500481	50	1:48	51,7	50,2	52	50,5	29,2	11,5	14,7	4,2	24	12,3	handwheel size 50	0,100
21960-501001	50	1:100	51,7	50,2	52	50,5	29,2	11,5	14,7	4,2	24	12,3	handwheel size 50	0,100
21960-800021	80	1:2	86,8	84,8	87	85,2	29,8	12,7	15,6	5	26,5	14,5	handwheel size 80	0,100
21960-800121	80	1:12	86,8	84,8	87	85,2	29,8	12,7	15,6	5	26,5	14,5	handwheel size 80	0,100
21960-800241	80	1:24	86,8	84,8	87	85,2	29,8	12,7	15,6	5	26,5	14,5	handwheel size 80	0,100
21960-800481	80	1:48	86,8	84,8	87	85,2	29,8	12,7	15,6	5	26,5	14,5	handwheel size 80	0,100
21960-801001	80	1:100	86,8	84,8	87	85,2	29,8	12,7	15,6	5	26,5	14,5	handwheel size 80	0,100

Position Indicators for handwheels

analogue and digital display



Material, surface finish:
Housing glass-fibre reinforced plastic, black;
viewing window plastic, dust-proof

Sample order:
nlm 21962-800201

Note:
Position indicators are provided for installation in handwheels. They allow direct readout of set measurement values such as lengths, flow rates, speeds, etc, at a glance.
The measurement values are acquired according to the gravity principle. Conceived for use on horizontal spindles.

One revolution of the black pointer corresponds to one spindle rotation. In combination with the 5-place digital display, a very precise and easy read out of the position is thus obtained

On request:
– Other pitchs

Accessory:
– Handwheels 21970/21972

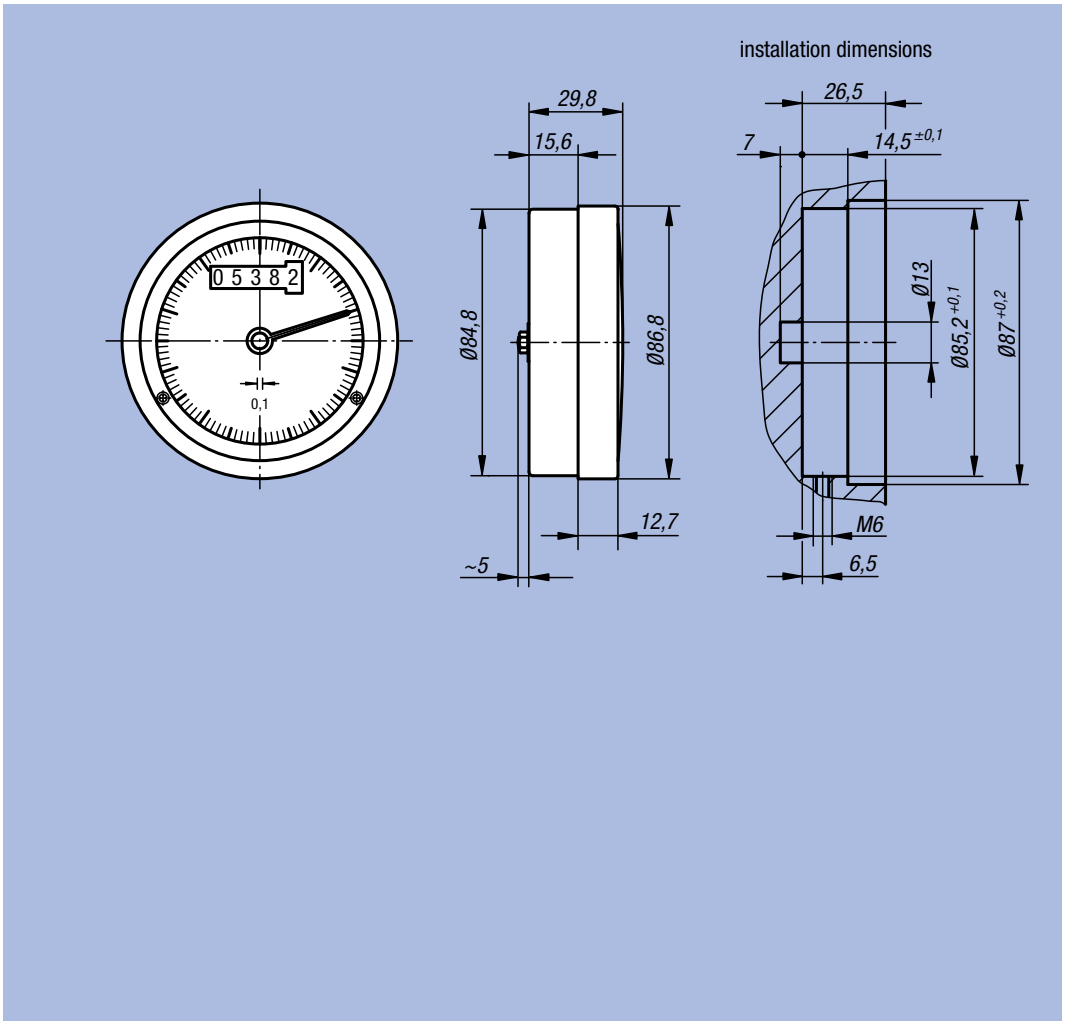

Order No.	Size	Pitch	Indicator after one rotation	Suitable for	kg
21962-800201	80	2	00002	handwheel size 80	0,200
21962-800301	80	3	00003	handwheel size 80	0,200
21962-800401	80	4	00004	handwheel size 80	0,200
21962-800501	80	5	00005	handwheel size 80	0,200
21962-801001	80	10	00010	handwheel size 80	0,200

Handwheels for position indicators



Material, surface finish:
Housing glass-fibre reinforced plastic, black;
hub in aluminium

Sample order:
nlm 21970-500631

Note:
Compact handwheels with rounded edges for avoiding contamination. The handwheels have a recess for receiving position indicators.

Accessory:
– Position Indicators 21960/21962

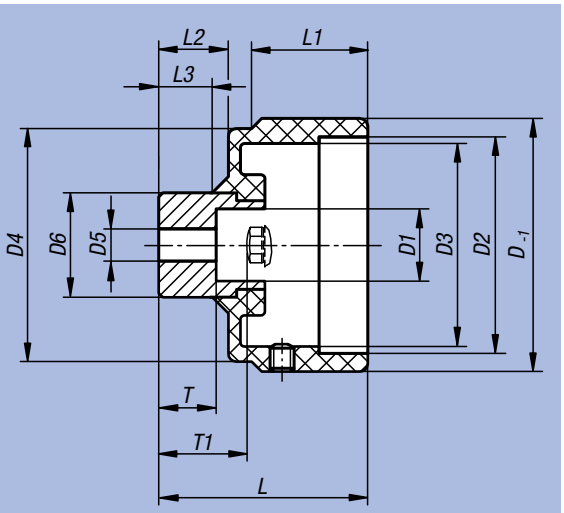

Order No.	Size	D	D1	D2	D3	D4	D5 predrilled	D6	L	L1	L2	L3	T	T1	Suitable for	kg
21970-500631	50	63	18	52	50,5	58	5,8	26	52	28,9	17,3	15	14,3	21	position indicator size 50	0,100
21970-800981	80	98	25,5	87	85,2	93	6,8	35	59	31,5	21,7	19	18	25,5	position indicator size 80	0,200

Handwheels for position indicators



Material, surface finish:
Cast aluminium, natural finish

Sample order:
nlm 21972-500801

Note:
The handwheels have a recess for receiving position indicators.

Accessory:
– Position Indicators 21960/21962
– Handles 06290 – 06320

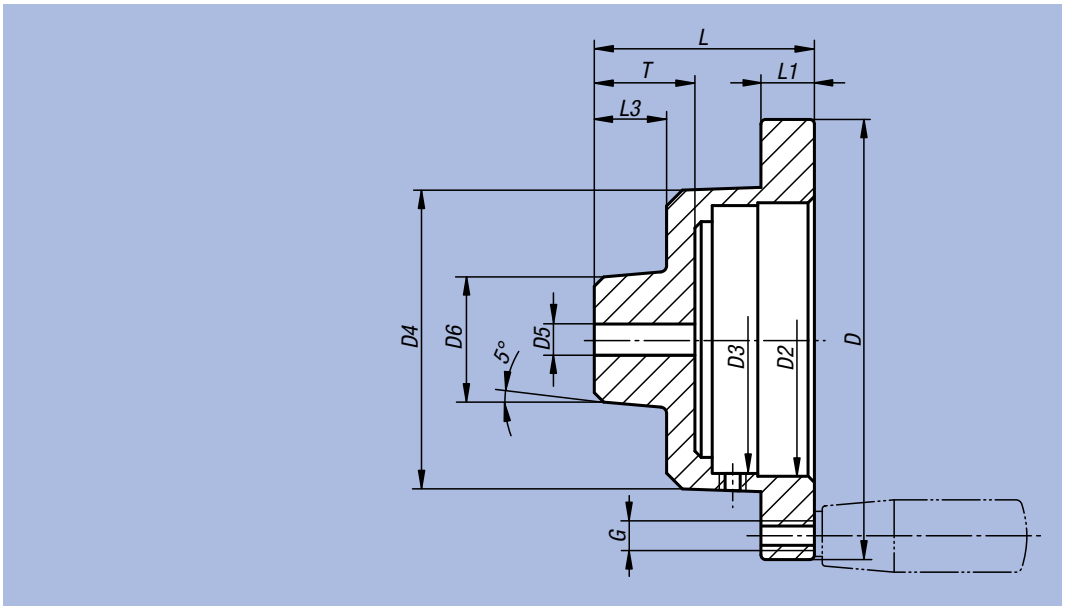

Order No.	Size	D	D2	D3	D4	D5 predrilled	D6	G	L	L1	L3	T	Suitable for	kg
21972-500801	50	80	52	50,5	60	5,8	26	M6	52	14	20	21	position indicator size 50	0,200
21972-801201	80	120	87	85,2	95	6,8	40	M6	64	15	23	30	position indicator size 80	0,500
21972-801401	80	140	87	85,2	95	6,8	40	M8	70	17	23	30	position indicator size 80	0,600

23000

Couplings
Rigid Couplings
Conical Clamping Rings
Cardan Joints
Quick Plug Couplings
Bearings



Couplings

Note:
The no-play, flexible metal bellows or elastomer couplings are particularly suited to highly accurate drives with average torque values. They are the ideal solution for accurately connecting two shaft journals at a true angle. Axial, radial and angular displacement between two ends of a shaft can be compensated within defined limits.
This produces no bearing stresses worth mentioning as a result of the low restoring forces. A strong shaft-to-hub connection guarantees no-play transmission of torque, even without additional feather key bolt.
Low mass moments of inertia and a high quality kinetic energy guarantee excellent dynamic behaviour, even at high revolutions.
As a basic principle, the couplings are wear- and maintenance-free.
The range of possible uses extends from challenging drive systems in general mechanical engineering through applications in metrology and automatic control to the spindle and axial drives of machine tools.
Other typical examples of their use include textile, packaging and timber-processing machines as well as industrial robots and multi-spindle drilling heads.

Engineering

Comparison	Metal bellows couplings	Elastomer couplings	Spring bar coupling devices
Major functional features	– very high torsion resistance, therefore accurate transfer of the angle of rotation – low mass moments of inertia – full metal manufacture – minimal restoring forces on the bearing	– plug-in (blind assembly is possible) – vibration dampening – no-play, due to pretensioning of the coupling star in the claws – 23020 and 23021 to DIN 69002 suitable for the highest revs	– compact design – play-free, absolute synchronism – high torsion resistance – low mass moments of inertia – full metal manufacture – models in aluminium and stainless steel
Connection or compensating elements	– metal bellows of stainless steel	– elastomer star in polyurethane	– full metal manufacture with slotted structure
Hub manufacture	– easy-to-assemble clamp hub (strong, no-play)	– easy-to-assemble clamp hub – conical connection to clamping ring hub	– easy-to-assemble clamp hub, fixed or removable (strong, no-play)
Temperature range	to max. 300 °C	-30 °C up to +90 °C	-50 °C up to +150 °C
Revolutions	Couplings are pre-balanced. Additional balancing is recommended for revolutions in excess of 5000 r.p.m.	Layout with clamping ring hub (23020 and 23021) is suitable for the revs up to 20000 r.p.m.	Depending on model, suitable for speeds up to 10000 r.p.m.

Layout

Judgement calculation: $\mathbf{M_N \geqq 1{,}5 \cdot M_{max.}\ [Nm]}$

$M_N \triangleq$ nominal torque of the coupling

$M_{max.} \triangleq$ maximum engine torque

For an accurate layout, the actual acting torques must be calculated from the cutting or acceleration forces. For short periods in exceptional cases such as collision, for example, increased stress up to twice the nominal torque is possible.

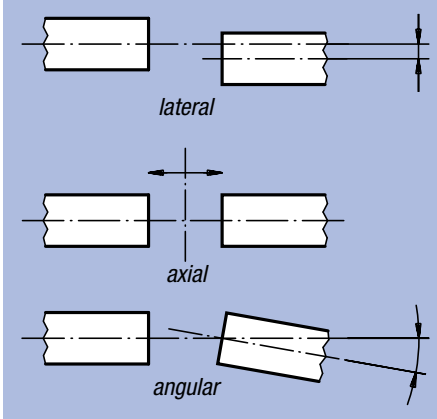

Shaft displacement

Axial and angular displacement are generally not a problem and are also easy to check. Conversely, great attention should be paid to radial shaft displacement, i.e. the lateral parallel displacement of the axes of rotation. This error must not exceed the value prescribed in the table.

Metal Bellows Couplings

with radial clamping hub



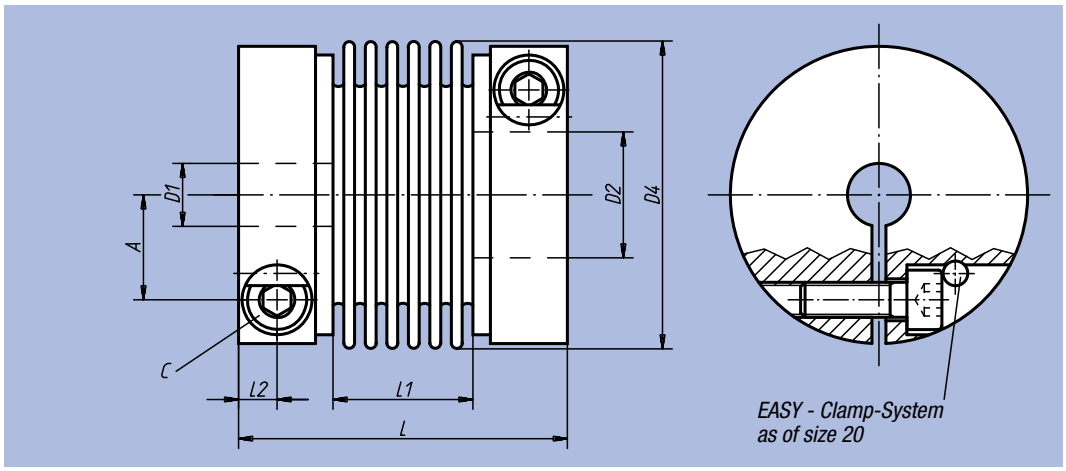

Material, surface finish:
Hub in aluminium, natural finish.
Bellows in stainless steel

Sample order:
nlm 23000-012,
D1 = 6
D2 = 6
(The hubs are supplied predrilled).

Note:
Short assembly times and an easy installation due to the radial clamping hub. Also, if the installation space is limited. The neccessary thightening torque of the clamping screw must be noted.

Installation:
The seat shaft / hub is to be selected as transitional seat. Admissible seat clearance shaft / hub: min. 0.01 mm; max. 0.04 mm.
E.g. shaft: Ø 28 k6
borehole: Ø 28 F6.
Boreholes which are smaller than D min. are possible; but an optimal transfer of the nominal torque of the coupling can not be guaranteed in this case.
As the metal bellows consist of thin stainless steel sheeting, special care during fitting and disassembly is neccesarry. Damages to the bellows can render the coupling useless.

On request:
Desired hub holes D1 and D2 seperately with tolerance class or tolerance zone.

Order No.	Size	Nominal torque Nm	Inertia (10^{-3} kgm²)	Torsion resistance Nm/arcmin	Max. axial shaft displacement ±	Max. lateral shaft displacement	Axial spring stiffness N/mm	Lateral spring stiffness N/mm	Tightening torque of screws (Nm)
23000-001	1	1	0,0004	0,09	0,3	0,2	21	26	1
23000-004	4	4	0,003	0,46	0,4	0,2	35	65	2
23000-007	7	7	0,014	1,1	0,6	0,25	45	60	4
23000-012	12	12	0,03	2,05	0,7	0,25	40	70	7
23000-020	20	20	0,14	5,2	0,8	0,25	51	190	14
23000-060	60	60	0,29	8,7	0,9	0,3	49	260	35
23000-170	170	170	0,83	17,5	1	0,3	80	470	65
23000-400	400	400	2,42	47,1	1	0,3	100	640	115
23000-600	600	600	4,7	66,9	1	0,3	100	980	200

Order No.	D1/D2 pedrilled	D1/D2 min.	D1/D2 max.	D4	A	C (DIN 912-10.9)	L	L1	L2	≈ g
23000-001	3	3	6	16,5	4,6	M2,5	31,5	13,5	3,3	12
23000-004	4	5	10	24,5	7,5	M3	43,5	17,5	4,4	40
23000-007	5	6	17	34	11	M4	57	29	5	70
23000-012	5	6	19	39,5	13	M5	62	29	6	140
23000-020	7	9	30	56	19	M6	70	30	7,5	300
23000-060	12	18	34	66	22	M8	77	33	8,5	500
23000-170	15	22	43	82	28,5	M10	92	40	10,5	800
23000-400	24	34	55	101	35	M12	106	48	12	1500
23000-600	31	35	70	122	43,5	M14	116	52	13,5	2200

Metal Bellows Couplings

miniature

clamping with grub screw



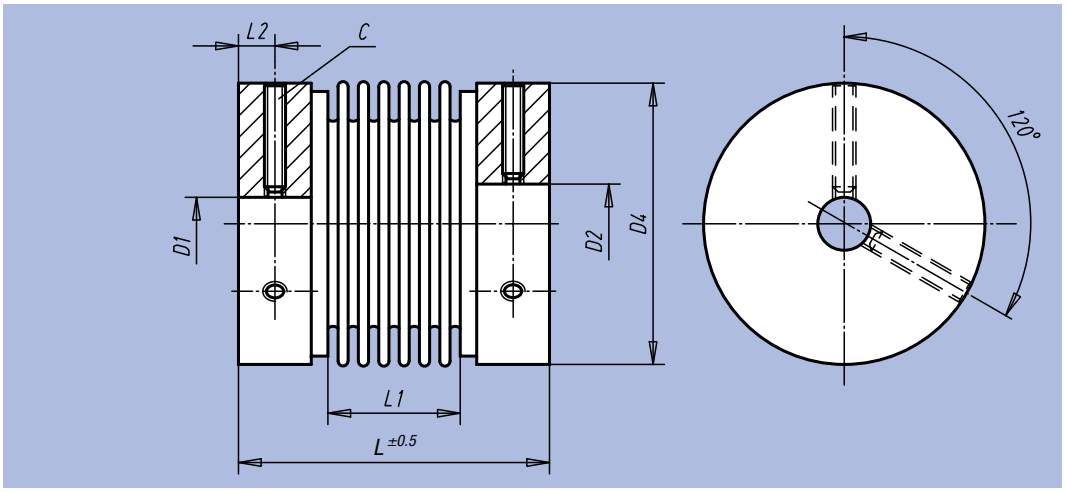

Material, surface finish:
Hub in aluminium, natural finish.
Bellows in stainless steel.

Sample order:
nlm 23002-0004,
D1 = 3
D2 = 3
(The hubs are supplied predrilled).

Note:
The clamping of the hub by means of a grub screw is a cost-effective alternative for the Metal Bellows Couplings with radial clamping hub (23000). Short assembly times and an easy installation due to the clamping hub with grub screws. Also, if the installation space is limited. The neccessary thightening torque of the grub screw must be noted. For easy disassembling we recommend to fit out the shafts with a face surface.

Temperature range:
-20 °C up to +150 °C.

Installation:
The seat shaft / hub is to be selected as transitional seat. Admissible seat clearance shaft / hub: min. 0.01 mm; max. 0.04 mm.
E.g. shaft: Ø 5 k6
borehole: Ø 5 G7.
Boreholes which are smaller than D min. are possible; but an optimal transfer of the nominal torque of the coupling can not be guaranteed in this case.
As the metal bellows consist of thin stainless steel sheeting, special care during fitting and disassembly is neccesarry. Damages to the bellows can render the coupling useless.

On request:
Desired hub holes D1 and D2 seperately with tolerance class or tolerance zone.

Order No.	Size	Nominal torque Nm	Inertia (10^{-3} kgm²)	Torsion resistance (10^{-3} Nm/arcmin)	Max. axial shaft displacement ±	Max. lateral shaft displacement	Axial spring stiffness N/mm	Lateral spring stiffness N/mm	◻ g
23002-0004	0,4	0,4	0,00019	50	0,35	0,1	10	15	8
23002-0005	0,9	0,9	0,00019	90	0,3	0,1	21	26	10
23002-0020	2	2	0,0029	230	0,5	0,1	15	15	32
23002-0040	4	4	0,0032	460	0,4	0,1	35	65	37
23002-0060	6	6	0,016	1100	0,6	0,25	45	60	85
23002-0080	8	9	0,028	1300	0,8	0,25	16	24	120

Order No.	Tightening torque of screws (Nm)	D1/D2 predrilled	D1/D2 min.	D1/D2 max.	D4	C (DIN 916)	L	L1	L2
23002-0004	1	3	3	8	16	M 3	26	12	2,3
23002-0005	1	3	3	8	16	M 3	27	13	2,3
23002-0020	4	5	5	15	25	M 4	38	16	3,5
23002-0040	4	5	5	15	25	M 4	39	17	3,5
23002-0060	8	6	6	20	35	M 5	54	29	4,3
23002-0080	10	6	6	26	41	M 6	54	26	5

Spring Bar Coupling Devices

with radial clamping hub, aluminium



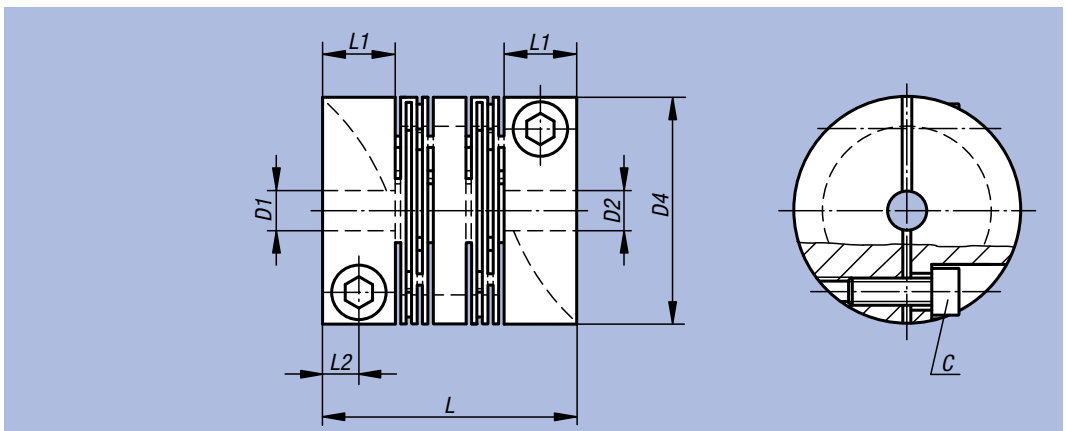

Material, surface finish:
Aluminium, natural finish

Sample order:
nlm 23010-1016,
D1 = 2,5
D2 = 2,5
(The hubs are supplied predrilled).

Note:
Play-free, torsion-proof, resiliently flexible and maintenance-free all-metal coupling device for transmission of angle-synchronous rotary movements. The innovative slit structure makes possible a very good axial, radial and angular flexibility in the case of low reset forces. Best suited for servomotors.

Temperature range:
-50 °C up to +150 °C.

Installation:
Recommended shaft tolerances h7.

On request:
Desired hub holes D1 and D2 seperately with tolerance class or tolerance zone.

Order No.	Size	Nominal torque Nm	Inertia (10^{-3} kgm²)	Torsion resistance Nm/arcmin	Max. axial shaft displacement ±	Max. lateral shaft displacement	Max. angular shaft displacement	Axial spring stiffness N/mm	Lateral spring stiffness N/mm	Revolutions per minute max.
23010-1016	16	3	0,001	0,09	0,3	0,2	1°	155	234	10000
23010-1018	18	3	0,0003	0,12	0,3	0,2	1°	39	176	10000
23010-1020	20	5	0,0015	0,15	0,3	0,2	1°	192	243	9500
23010-1022	22	3	0,0008	0,17	0,3	0,2	1°	80	369	9500
23010-1025	25	7	0,0043	1,02	0,3	0,2	1°	140	437	8000
23010-1030	30	10	0,011	1,45	0,4	0,3	1°	170	363	6000
23010-1040	40	19	0,035	3,35	0,4	0,3	1°	270	379	5000
23010-1050	50	35	0,114	10,18	0,5	0,3	1°	410	853	5000
23010-1060	60	70	0,285	20,65	0,5	0,3	1°	510	1201	4500
23010-1070	70	130	0,480	27,55	0,5	0,3	1°	1900	2002	4000

Order No.	D1/D2 predrilled	D1/D2 min.	D1/D2 max.	D4	L	L1	L2	C (DIN 912-12.9)	Tightening torque of screws (Nm)	kg
23010-1016	2,5	3	6	16	23	7	3,5	M2,5x6	1	0,010
23010-1018	2,5	3	6	18	18	5,5	2,75	M2,5x8	1	0,005
23010-1020	2,5	3	8	20	28	8	4	M2,5x8	1	0,015
23010-1022	2,5	3	10	22	20	5,5	2,75	M2,5x8	1	0,012
23010-1025	5,5	6	12	25	28	8	4	M3x10	2	0,025
23010-1030	5,5	6	14	30	40	11	5,5	M4x10	4	0,050
23010-1040	5,5	6	18	40	48	11	5,5	M5x14	9	0,115
23010-1050	9,5	10	26	50	65	19	9,5	M6x16	14	0,250
23010-1060	9,5	10	30	60	80	25	12,5	M8x18	30	0,500
23010-1070	14,5	15	35	70	95	25	12,5	M8x25	30	0,750

Spring Bar Coupling Devices

with radial clamping hub, stainless steel



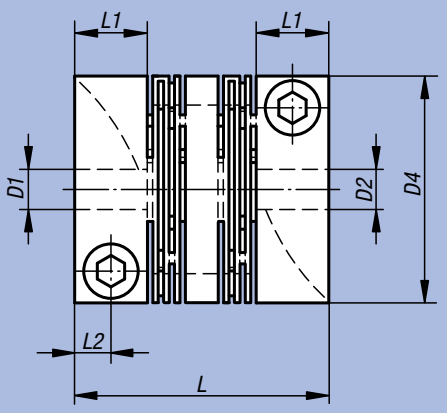

Material, surface finish:
Stainless steel 1.4305, natural finish

Sample order:
nlm 23010-2016,
D1 = 2,5
D2 = 2,5
(The hubs are supplied predrilled).

Note:
Play-free, torsion-proof, resiliently flexible and maintenance-free all-metal coupling device for transmission of angle-synchronous rotary movements. The innovative slit structure makes possible a very good axial, radial and angular flexibility in the case of low reset forces. Best suited for servomotors.

Temperature range:
-50 °C up to +150 °C.

Installation:
Recommended shaft tolerances h7.

On request:
Desired hub holes D1 and D2 seperately with tolerance class or tolerance zone.

Order No.	Size	Nominal torque Nm	Inertia (10^{-3} kgm²)	Torsion resistance Nm/arcmin	Max. axial shaft displacement ±	Max. lateral shaft displacement	Max. angular shaft displacement	Axial spring stiffness N/mm	Lateral spring stiffness N/mm	Revolutions per minute max.
23010-2016	16	6	0,0025	0,23	0,3	0,2	1°	325	940	10000
23010-2018	18	6	0,001	0,2	0,3	0,2	1°	98	435	10000
23010-2020	20	12	0,0032	0,23	0,3	0,2	1°	435	508	9500
23010-2022	22	6	0,0024	0,9	0,3	0,2	1°	136	450	9500
23010-2025	25	16	0,00784	1,45	0,3	0,2	1°	285	927	8000
23010-2030	30	25	0,022	2,47	0,4	0,3	1°	400	903	6000
23010-2040	40	36	0,09	5,82	0,4	0,3	1°	660	1229	5000
23010-2050	50	73	0,254	16	0,5	0,3	1°	950	1619	5000

Order No.	D1/D2 predrilled	D1/D2 min.	D1/D2 max.	D4	L	L1	L2	C (DIN 912-12.9)	Tightening torque of screws (Nm)	kg
23010-2016	2,5	3	6	16	23	7	3,5	M2,5x6	1	0,028
23010-2018	2,5	3	6	18	18	5,5	2,75	M2,5x8	1	0,018
23010-2020	2,5	3	8	20	28	8	4	M2,5x8	1	0,045
23010-2022	2,5	3	10	22	20	5,5	2,75	M2,5x8	1	0,040
23010-2025	5,5	6	12	25	28	8	4	M3x10	2	0,075
23010-2030	5,5	6	14	30	40	11	5,5	M4x10	4	0,160
23010-2040	5,5	6	18	40	48	11	5,5	M5x14	9	0,340
23010-2050	9,5	10	26	50	65	19	9,5	M6x16	14	0,650

Spring Bar Coupling Devices

with detachable clamp hubs, aluminium



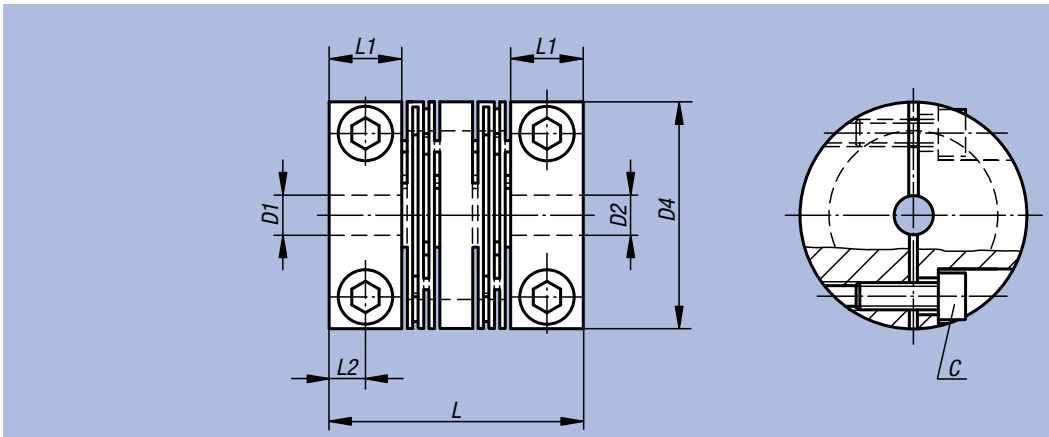

Material, surface finish:
Aluminium, natural finish

Sample order:
nlm 23012-1025,
D1 = 5,5
D2 = 5,5
(The hubs are supplied predrilled).

Note:
Play-free, torsion-proof, resiliently flexible and maintenance-free all-metal coupling device for transmission of angle-synchronous rotary movements. The innovative slit structure makes possible a very good axial, radial and angular flexibility in the case of low reset forces. Best suited for servomotors.

Temperature range:
-50 °C up to +150 °C.

Installation:
Recommended shaft tolerances h7.

On request:
Desired hub holes D1 and D2 seperately with tolerance class or tolerance zone.

Order No.	Size	Nominal torque Nm	Inertia (10^{-3} kgm²)	Torsion resistance Nm/arcmin	Max. axial shaft displacement ±	Max. lateral shaft displacement	Max. angular shaft displacement	Axial spring stiffness N/mm	Lateral spring stiffness N/mm	Revolutions per minute max.
23012-1025	25	7	0,0043	1,02	0,3	0,2	1°	140	437	8000
23012-1030	30	10	0,011	1,45	0,4	0,3	1°	170	363	6000
23012-1040	40	19	0,035	3,35	0,4	0,3	1°	270	379	5000
23012-1050	50	35	0,114	10,18	0,5	0,3	1°	410	853	5000

Order No.	D1/D2 predrilled	D1/D2 min.	D1/D2 max.	D4	L	L1	L2	C (DIN 912-12.9)	Tightening torque of screws (Nm)	kg
23012-1025	5,5	6	12	25	28	8	4	M3x10	2	0,025
23012-1030	5,5	6	14	30	40	11	5,5	M4x10	4	0,050
23012-1040	5,5	6	18	40	48	11	5,5	M5x14	9	0,115
23012-1050	9,5	10	26	50	65	19	9,5	M6x16	14	0,250

Spring Bar Coupling Devices

with detachable clamp hubs, aluminium



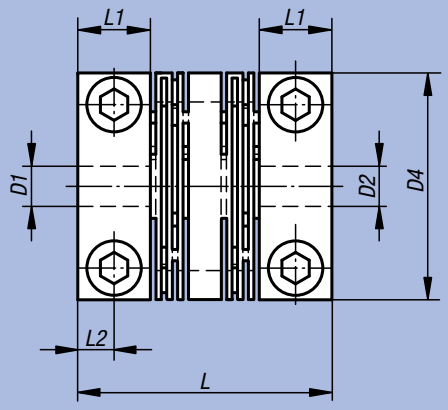

Material, surface finish:
Stainless steel 1.4305, natural finish

Sample order:
nlm 23012-2025,
D1 = 5,5
D2 = 5,5
(The hubs are supplied predrilled).

Note:
Play-free, torsion-proof, resiliently flexible and maintenance-free all-metal coupling device for transmission of angle-synchronous rotary movements. The innovative slit structure makes possible a very good axial, radial and angular flexibility in the case of low reset forces. Best suited for servomotors.

Temperature range:
-50 °C up to +150 °C.

Installation:
Recommended shaft tolerances h7.

On request:
Desired hub holes D1 and D2 seperately with tolerance class or tolerance zone.

Order No.	Size	Nominal torque Nm	Inertia (10^{-3} kgm²)	Torsion resistance Nm/arcmin	Max. axial shaft displacement ±	Max. lateral shaft displacement	Max. angular shaft displacement	Axial spring stiffness N/mm	Lateral spring stiffness N/mm	Revolutions per minute max.
23012-2025	25	16	0,00784	1,45	0,3	0,2	1°	285	927	8000
23012-2030	30	25	0,022	2,47	0,4	0,3	1°	400	903	6000
23012-2040	40	36	0,09	5,82	0,4	0,3	1°	660	1229	5000
23012-2050	50	73	0,254	16	0,5	0,3	1°	950	1619	5000

Order No.	D1/D2 predrilled	D1/D2 min.	D1/D2 max.	D4	L	L1	L2	C (DIN 912-12.9)	Tightening torque of screws (Nm)	kg
23012-2025	5,5	6	12	25	28	8	4	M3x10	2	0,075
23012-2030	5,5	6	14	30	40	11	5,5	M4x10	4	0,160
23012-2040	5,5	6	18	40	48	11	5,5	M5x14	9	0,340
23012-2050	9,5	10	26	50	65	19	9,5	M6x16	14	0,650

Elastomer Dog Couplings

with conical hub and clamping ring (similar to DIN 69002)



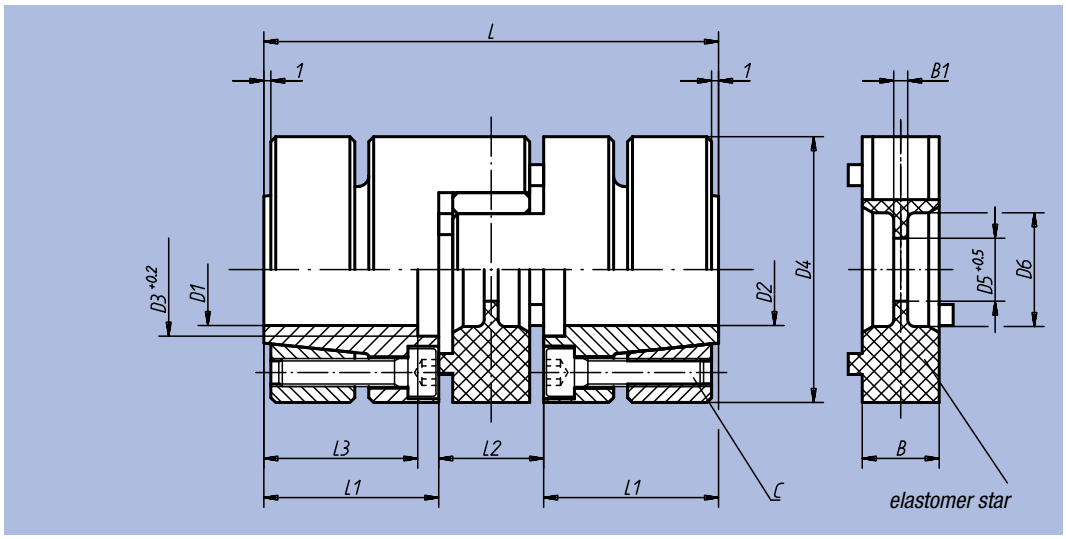

Material, surface finish:
Elastomer spider in polyurethane, shore hardness 98-A. Hub in aluminium.
Conical ring in tempered steel

Sample order:
nlm 23021-010,
D1 = 6
D2 = 6
(The hubs are supplied predrilled).

Note:
This serie of couplings is particularly suitable for use in main spindle drives resp. boring spindle drives for high speeds. The two clamping ring hubs must be mounted on the shaft ends with the given thightening torque of the screw before the plug-in assembly. The assembly force can be minimised by slight oiling of the spider.

Installation:
The seat shaft / hub is to be selected as transitional seat. Admissible seat clearance shaft / hub: max. 0.02 mm.
E.g. shaft: Ø 25 k6
borehole: Ø 25 G6.
Boreholes which are smaller than D min. are possible; but an optimal transfer of the nominal torque of the coupling can not be guaranteed in this case.

On request:
Desired hub holes D1 and D2 seperately with tolerance class or tolerance zone.

Order No.	Size	Nominal torque Nm	Inertia (10^{-3} kgm²)	Static resistance to torsion Nm/arcmin	Max. axial shaft displacement ±	Max. lateral shaft displacement	Radial spring stiffness N/mm	Tightening torque of screws (Nm)	Revolutions per minute max.
23021-010	10	10	0,015	0,04	0,5	0,1	600	1,8	20000
23021-017	17	17	0,05	0,24	0,5	0,1	2100	4	18000
23021-043	43	43	0,19	0,4	0,5	0,1	2500	8	14500
23021-060	60	60	0,28	0,6	0,5	0,1	2600	8	13000
23021-150	150	150	0,65	1,05	1	0,1	3300	8	11000
23021-320	320	320	2	2	1	0,12	4500	35	9000
23021-500	500	500	5,6	5,8	1	0,15	5900	67	7500
23021-700	700	700	13	8	1	0,15	7000	115	6000

Order No.	D1/D2 predrilled	D1/D2 min.	D1/D2 max.	D3	D4	D5	D6	L	L1	L2	L3	B	B1	C (DIN 912-12.9)	g
23021-010	6	6	14	17	32	8,5	10,5	50	18,5	13	15,5	10	2	4 x M3	110
23021-017	9	9	19	22	40	9,5	18	66	25	16	21	12	3	6 x M4	280
23021-043	10	12	24	29	50	12,5	27	78	30	18	25	14	3	4 x M5	400
23021-060	12	12	26	30	55	12,5	27	78	30	18	25	14	3	4 x M5	600
23021-150	12	17	36	40	65	14,5	30	90	35	20	30	15	4	8 x M5	900
23021-320	18	20	40	46	80	16,5	38	114	45	24	40	18	4	4 x M8	1900
23021-500	20	22	48	58	100	20,5	47	138	55	28	49	22	5	4 x M10	4500
23021-700	24	25	60	72	120	22,5	58	155	61	33	54	25	6	4 x M12	7000

Elastomer Dog Couplings

with radial clamping hub



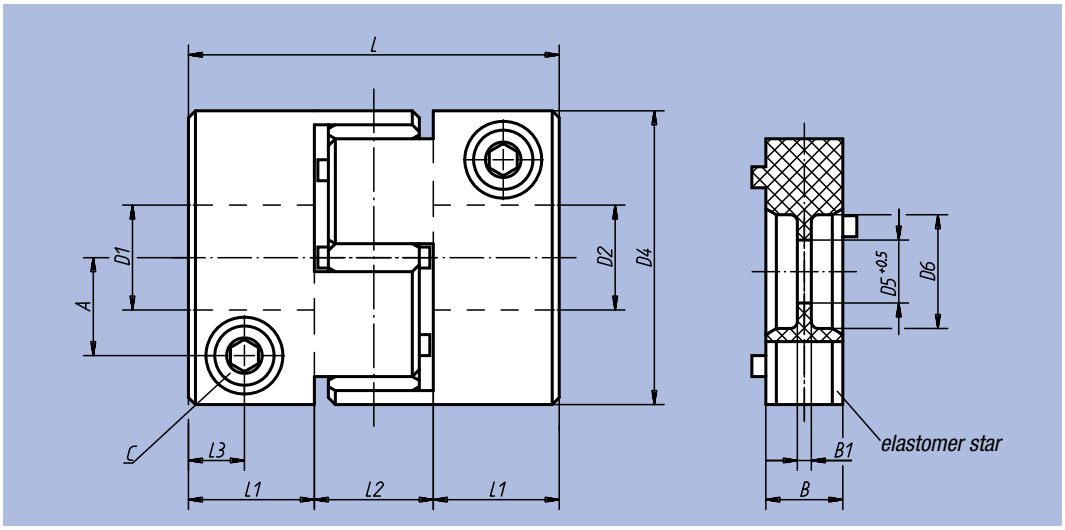

Material, surface finish:
Elastomer spider in polyurethane, shore hardness 98-A. Hub in aluminium, natural finish

Sample order:
nlm 23022-008,
D1 = 6
D2 = 6
(The hubs are supplied predrilled).

Note:
Short assembly times due to the radial clamping hub. The couplings can be mounted in complete assembled condition resp. a plug-in assembly is also possible. The assembly force can be minimised by slight oiling of the spider. The neccessary thightening torque of the clamping screw must be noted.

Installation:
The seat shaft / hub is to be selected as transitional seat. Admissible seat clearance shaft / hub: min. 0.01 mm; max. 0.04 mm.
E.g. shaft: Ø 28 k6
hub: Ø 28 F6.
Hub boreholes which are smaller than D min. are possible; but an optimal transfer of the nominal torque of the coupling can not be guaranteed in this case.

On request:
Desired hub holes D1 and D2 seperately with tolerance class or tolerance zone.

Order No.	Size	Nominal torque Nm	Inertia (10^{-3} kgm²)	Static resistance to torsion Nm/arcmin	Max. axial shaft displacement ±	Max. lateral shaft displacement	Radial spring stiffness N/mm	Tightening torque of screws (Nm)
23022-002	2	2	0,00016	0,007	0,6	0,1	405	0,5
23022-005	5	5	0,0011	0,016	0,8	0,1	510	1
23022-008	8	8	0,01	0,04	0,5	0,1	600	4
23022-015	15	15	0,03	0,24	0,5	0,1	2100	8
23022-030	30	30	0,09	0,41	0,5	0,1	2500	14
23022-060	60	60	0,18	0,61	0,5	0,1	2600	35
23022-150	150	150	0,38	1,05	1	0,1	3300	67
23022-300	300	300	1	2	1	0,12	4500	115
23022-500	500	500	2,2	5,8	1	0,15	5900	115
23022-700	700	700	5,2	8	1	0,15	7000	185

Order No.	D1/D2 predrilled	D1/D2 min.	D1/D2 max.	D4	D5	D6	A	L	L1	L2	L3	B	B1	C (DIN 912-10.9)	◻g
23022-002	3	3	5	14	-	-	4	22	7	8	3,5	6	-	M2	7
23022-005	5	5	8	20	-	-	6,5	30	10	10	5	8	-	M2,5	18
23022-008	6	8	15	32	8,5	10,5	10,5	40	13,5	13	6	10	2	M4	60
23022-015	7	10	20	40	9,5	18	13,5	50	17	16	8	12	3	M5	120
23022-030	9	13	26	50	12,5	27	16,5	58	20	18	9	14	3	M6	210
23022-060	12	15	29	60	12,5	27	19,5	62	22	18	10	14	3	M8	320
23022-150	15	22	33	70	14,5	30	23	73	26,5	20	12	15	4	M10	520
23022-300	18	30	42	85	16,5	38	29	86	31	24	14	18	4	M12	900
23022-500	20	38	56	100	20,5	47	36	94	33	28	16	22	5	M12	1500
23022-700	24	40	70	120	22,5	58	44	109	38	33	18	25	6	M14	2500

Elastomer Dog Couplings

clamping with grub screw

miniature



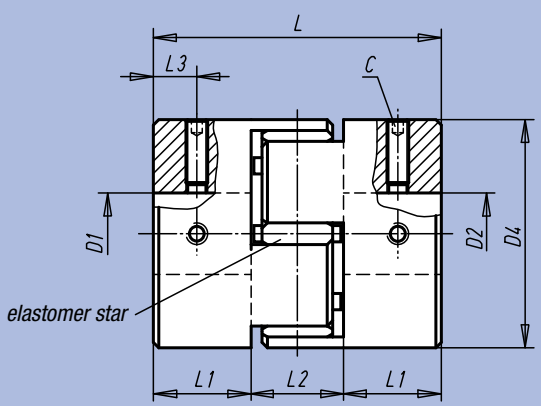

Material, surface finish:
Elastomer spider in polyurethane, shore hardness 98-A. Hub in aluminium, natural finish

Sample order:
nlm 23023-0020,
D1 = 3
D2 = 3
(The hubs are supplied predrilled).

Note:
The clamping of the hub by means of a grub screw is a cost-effective alternative for the Elastomer Dog Couplings with radial clamping hub (23022). Short assembly times due to the clamping hub with grub screws. The couplings can be mounted in complete assembled condition resp. a plug-in assembly is also possible. The assembly force can be minimised by slight oiling of the spider. The neccessary thightening torque of the grub screw must be noted. For easy disassembling we recommend to fit out the shaft with a face surface.

Installation:
The seat shaft / hub is to be selected as transitional seat. Admissible seat clearance shaft / hub: min. 0.01 mm; max. 0.04 mm.
E.g. shaft: Ø 6 f7
hub: Ø 6 H8.
Hub boreholes which are smaller than D min. are possible; but an optimal transfer of the nominal torque of the coupling can not be guaranteed in this case.

On request:
Desired hub holes D1 and D2 seperately with tolerance class or tolerance zone.

Order No.	Size	Nominal torque Nm	Inertia (10^{-3} kgm²)	Static resistance to torsion Nm/arcmin	Max. axial shaft displacement ±	Max. lateral shaft displacement	Tightening torque of screws (Nm)	≙ g
23023-0020	2	2	0,00021	0,007	0,6	0,1	0,7	7,0
23023-0050	5	5	0,001	0,016	0,8	0,1	0,7	18,0
23023-0125	12,5	12,5	0,0059	0,038	1	0,1	1,7	48,0

Order No.	D1/D2 predrilled	D1/D2 min.	D1/D2 max.	D4	L	L1	L2	L3	C (DIN 916)
23023-0020	3	3	6	14	22	7	8	3,5	M3
23023-0050	5	5	9,53	20	30	10	10	5	M3
23023-0125	8	8	14	30	35	11	13	5,5	M4

Elastomer Dog Couplings

with radial clamping hub and intermediate tube



Material, surface finish:
Elastomer spider in polyurethane, shore hardness 98-A. Hub in aluminium, natural finish.
Intermediate tube: aluminium

Sample order:
nlm 23025-020X0500
(please also indicate dimension L4 = 500 mm)
D1 = 7
D2 = 7
(The hubs are supplied predrilled).

Note:
This serie of couplings captivate due to the simple and cost-effective solution with a intermediate tube, which is variable in length and Elastomer Dog Couplings arranged on both sides (see 23022).
Benefits are the very low moment of inertia, low weight as well as the high admissible displacement values for shaft alignment.
In the example of linear robots in packaging and printing machines this low-maintenance, rust-free coupling represents a good alternative.
The thightening torque of the clamping screws see technical data of 23022.
By application with more than 1500 r.p.m. speed and a total coupling length L4 of more than 2 m, please contact us first.
Max. shaft displacement axial: ±1 mm.
Max. shaft displacement lateral: 5 mm per meter.

Benefits:
- Plug-in, backlash-free, vibration absorption
- customized length up to 3 m
- radial clamping hub for simple installation
- to 400 Nm

On request:
Desired hub holes D1 and D2 seperately with tolerance class or tolerance zone.

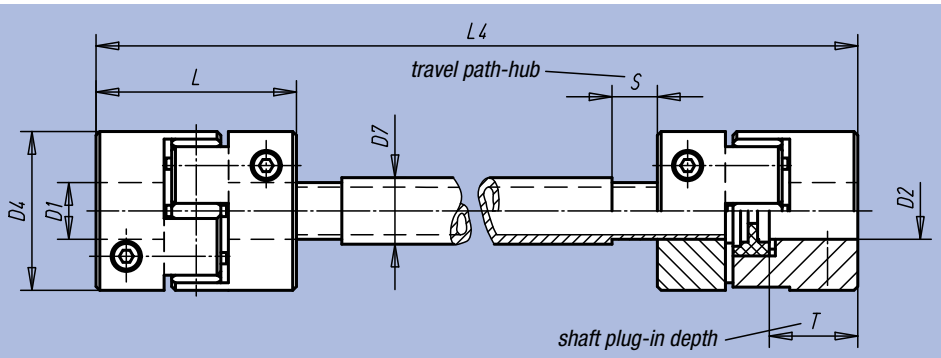

Assembly and Length Calculation:
The combination of the easy assembly clamp hub version of 23022 and push fits on the intermediate tube guarantee quick and easy assembly or dismantling of 23025. There is no need of axial displacement to do this as either half of the coupling on the intermediate tube can be inserted between the ends of the shaft as a spacer. Plug-in connection of the coupling hub to the elastomer star is achieved by means of a small, manual axial force. The hubs are attached to the shaft or the ends of the tube by only one radial clamping bolt in each case, taking account of the structural dimension L.

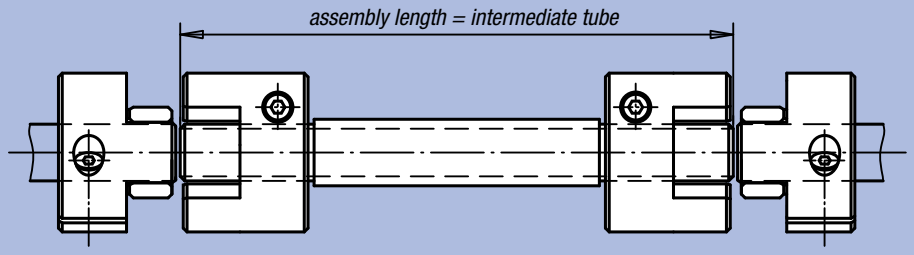

L4 = X + 2T

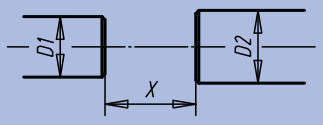

X = shaft distance
T = plug-in depth

Order No.	Size	Nominal torque Nm	Inertia (10^{-3} kgm²) 0,5 m	Inertia (10^{-3} kgm²) 1,0 m	Inertia (10^{-3} kgm²) 2,0 m	Torsion resistance Nm/ arcmin 0,5 m	Torsion resistance Nm/ arcmin 1,0 m	Torsion resistance Nm/ arcmin 2,0 m
23025-020X	20	20	0,08	0,1	-	0,1	0,07	-
23025-045X	45	45	0,27	0,36	0,56	0,25	0,19	0,13
23025-090X	90	90	0,45	0,54	0,74	0,3	0,23	0,15
23025-200X	200	200	0,9	1,1	1,4	0,5	0,4	0,3
23025-400X	400	400	2,5	3,2	4,5	1,2	1	0,8

Order No.	D1/D2 predrilled	D1/D2 min.	D1/D2 max.	D4	D7	L	L4 min.	S	T min.	T max.
23025-020X	7	10	20	40	20	50	132	16	16	20
23025-045X	9	13	26	50	30	58	152	18	18	25
23025-090X	12	15	29	60	30	62	160	18	20	26
23025-200X	15	22	33	70	35	73	186	20	23	30
23025-400X	18	30	42	85	50	86	220	24	28	35

Oldham-Type Couplings

with radial clamping hub

miniature



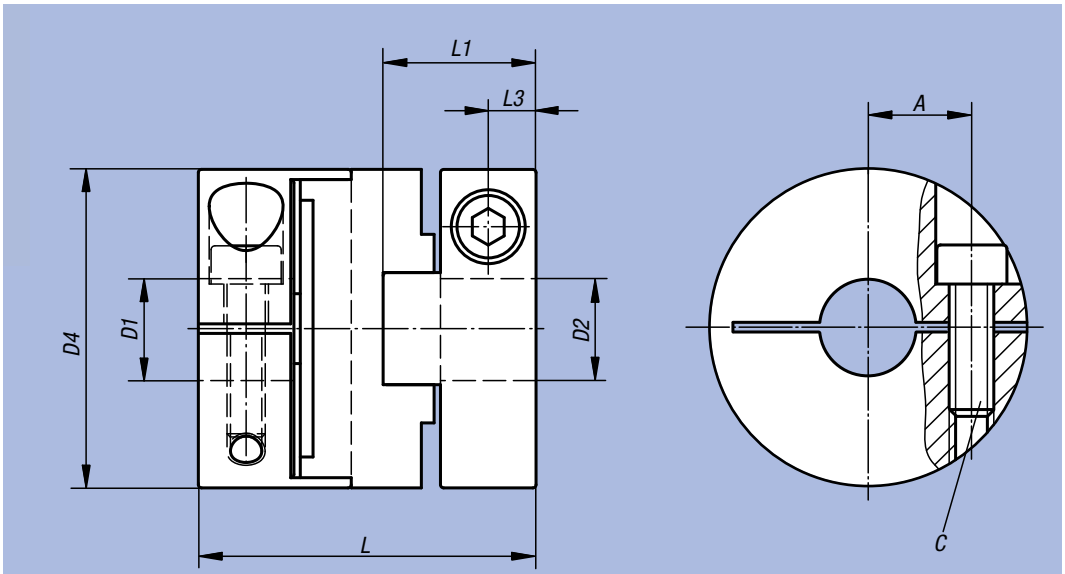

Material, surface finish:
Spacer polyacetal, hub in aluminium

Sample order:
nlm 23030-0016,
D1 = 3
D2 = 3
(The hubs are supplied predrilled).

Note:
Short assembly times due to the radial clamping hub. The couplings can be mounted in complete assembled condition resp. a plug-in assembly is also possible. The neccessary thightening torque of the clamping screw must be noted.

Installation:
The connection of shaft ends to hub hole is optional. The play should be min. 0.01 mm and max. 0.04 mm,
e.g. shaft: Ø 6 f7
hub: Ø 6 H8.

Benefits:
- robust
- plug-in
- backlash-free
- short design

On request:
Desired hub holes D1 and D2 seperately with tolerance class or tolerance zone.

Order No.	Size	Nominal torque Nm	Inertia (10^{-6} kgm²)	Static resistance to torsion Nm/arcmin	Max. angular shaft displacement	Max. lateral shaft displacement	Revolutions per minute max.	Tightening torque of screws (Nm)	≈ g
23030-0016	16	1	0,0032	0,019	2°	1	8000	1	10
23030-0020	20	1,5	0,0082	0,035	2°	1,5	7000	1	16
23030-0025	25	2,5	0,026	0,058	2°	2	6000	1,5	34
23030-0032	32	7	0,083	0,18	2°	2,5	4800	2,5	80

Order No.	D1/D2 predrilled	D1/D2 min.	D1/D2 max.	D4	A	L	L1	L3	C (DIN 912-10.9)
23030-0016	3	3	6	16	5	21	7	3	M2,6
23030-0020	5	5	8	20	6,5	22,5	7	3	M2,6
23030-0025	6,35	6,35	10	25	8	27	8	4	M3
23030-0032	8	8	14	32	11	35	10	5	M4

Oldham-Type Couplings

clamping with grub screw

miniature



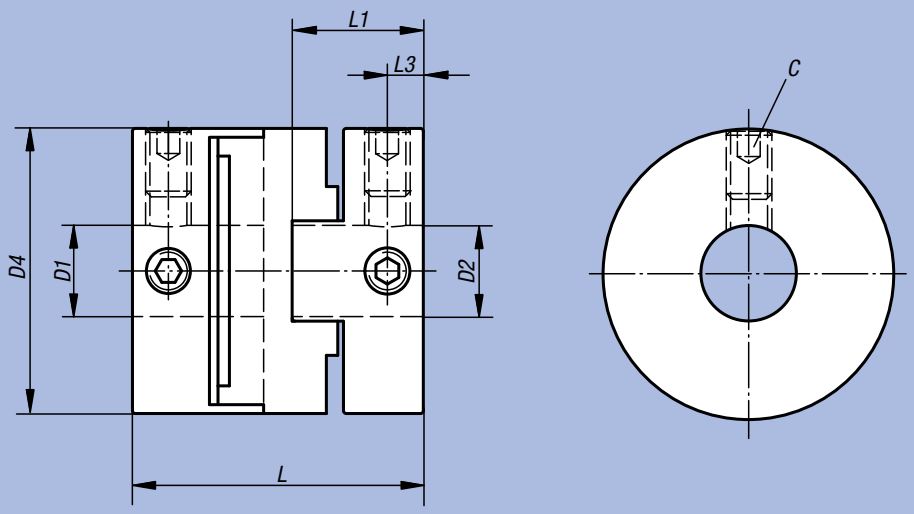

Material, surface finish:
Spacer polyacetal, hub in aluminium

Sample order:
nlm 23032-0016,
D1 = 4
D2 = 4
(The hubs are supplied predrilled).

Note:
The clamping of the hub by means of a grub screw is a cost-effective alternative for the Oldham-Type Couplings with radial clamping hub (23030). Short assembly times due to the clamping hub with grub screws. The couplings can be mounted in complete assembled condition resp. a plug-in assembly is also possible. The neccessary thightening torque of the grub screw must be noted. For easy disassembling we recommend to fit out the shaft with a face surface.

Installation:
The seat shaft / hub is to be selected as transitional seat. Admissible seat clearance shaft / hub: min. 0.01 mm; max. 0.04 mm.
E.g. shaft: Ø 6 f7
hub: Ø 6 H8.

Benefits:
- robust
- plug-in
- backlash-free
- short design

On request:
Desired hub holes D1 and D2 seperately with tolerance class or tolerance zone.

Order No.	Size	Nominal torque Nm	Inertia (10^{-3} kgm²)	Static resistance to torsion Nm/arcmin	Max. angular shaft displacement	Max. lateral shaft displacement	Revolutions per minute max.	Tightening torque of screws (Nm)	□ g
23032-0016	16	1	0,0024	0,019	2°	1	8000	1	7
23032-0020	20	1,5	0,0081	0,035	2°	1,5	7000	1,7	14
23032-0025	25	2,5	0,018	0,058	2°	2	6000	1,7	20
23032-0032	32	7	0,067	0,18	2°	2,5	4800	4	48

Order No.	D1/D2 predrilled	D1/D2 min.	D1/D2 max.	D4	L	L1	L3	C (DIN 916)
23032-0016	4	4	6,35	16	18	8	2,3	M3
23032-0020	4	4	8	20	20	9	2,5	M4
23032-0025	5	5	10	25	25,5	11,5	3	M4
23032-0032	8	8	14	32	32	14,5	4	M5

Slotted rigid couplings



Material, surface finish:
Steel 1.0718, natural finish;
stainless steel 1.4305, natural finish

Sample order:
nlm 23050-1100

Note:
Rigid couplings transmit high torques without rotational play. They are used when there are no shaft displacements or alignment errors. Wear-free and maintenance-free. Because screws are secured, no vibration-induced loosening of screws

Is only possible to achieve the transmission of the maximum torque with optimal installation and dimensional decision of the shafts.

Maximum speed 4000 rpm.

Temperature range:
-40 °C up to +175 °C.

On request:
Other dimensions.
Model with feather slot to DIN 6885/1, tolerance P9.

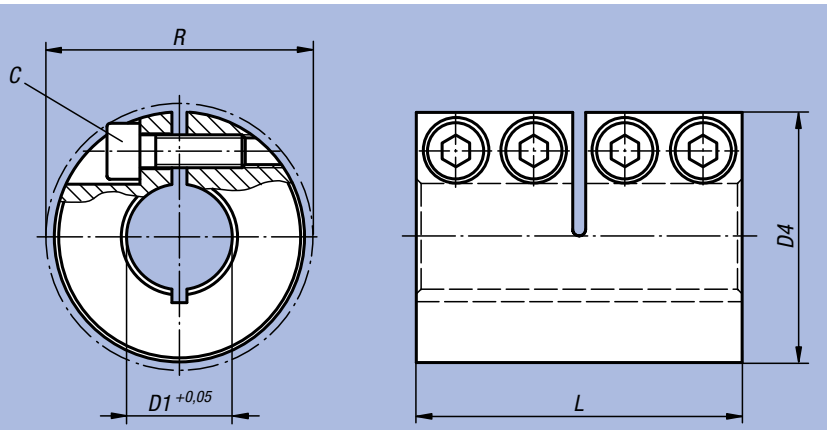

Slotted rigid couplings, steel

Order No.	C (DIN 912-12.9)	D1	D4	L	R	Nominal torque Nm	kg
23050-1100	M4x12	10	29	45	32,7	100	0,185
23050-1120	M4x12	12	29	45	32,7	100	0,180
23050-1140	M5x16	14	34	50	39,1	190	0,272
23050-1150	M5x16	15	34	50	39,1	190	0,266
23050-1160	M5x16	16	34	50	39,1	190	0,261
23050-1190	M6x18	19	42	65	48,2	300	0,520
23050-1200	M6x18	20	42	65	48,2	350	0,518
23050-1250	M6x18	25	45	75	50,8	390	0,623
23050-1300	M6x18	30	53	83	58,1	475	0,920

Slotted rigid couplings, stainless steel

Order No.	C (DIN 912-12.9)	D1	D4	L	R	Nominal torque Nm	kg
23050-2100	M4x12	10	29	45	32,7	90	0,185
23050-2120	M4x12	12	29	45	32,7	90	0,180
23050-2140	M5x16	14	34	50	39,1	160	0,272
23050-2150	M5x16	15	34	50	39,1	160	0,266
23050-2160	M5x16	16	34	50	39,1	160	0,261
23050-2190	M6x18	19	42	65	48,2	260	0,520
23050-2200	M6x18	20	42	65	48,2	300	0,518
23050-2250	M6x18	25	45	75	50,8	325	0,623
23050-2300	M6x18	30	53	83	58,1	400	0,920

Divided rigid couplings



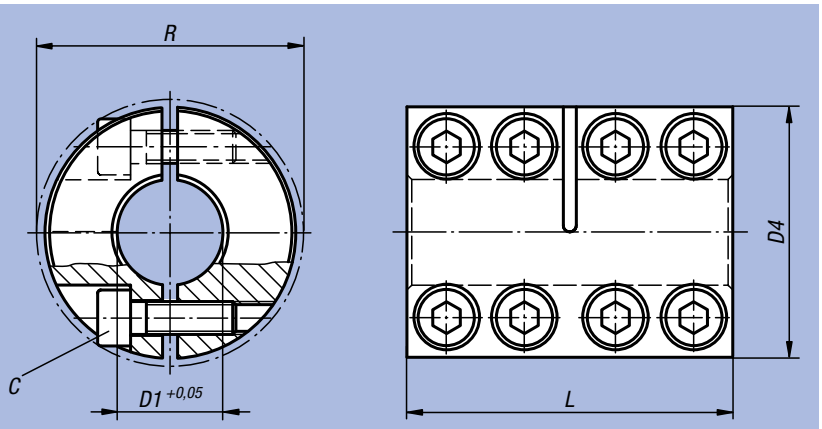

Material, surface finish:
Steel 1.0718, natural finish;
stainless steel 1.4305, natural finish

Sample order:
nlm 23052-1100

Note:
Rigid couplings transmit high torques without rotational play. They are used when there are no shaft displacements or alignment errors. Wear-free and maintenance-free. Because screws are secured, no vibration-induced loosening of screws

Is only possible to achieve the transmission of the maximum torque with optimal installation and dimensional decision of the shafts.

Maximum speed 4000 rpm.

Temperature range:
-40 °C up to +175 °C.

On request:
Other dimensions.
Model with feather slot to DIN 6885/1, tolerance P9.

Divided rigid couplings, steel

Order No.	C (DIN 912-12.9)	D1	D4	L	R	Nominal torque Nm	kg
23052-1100	M4x12	10	29	45	32,7	100	0,185
23052-1120	M4x12	12	29	45	32,7	100	0,180
23052-1140	M5x16	14	34	50	39,1	190	0,272
23052-1150	M5x16	15	34	50	39,1	190	0,266
23052-1160	M5x16	16	34	50	39,1	190	0,261
23052-1190	M6x18	19	42	65	48,2	300	0,520
23052-1200	M6x18	20	42	65	48,2	350	0,518
23052-1250	M6x18	25	45	75	50,8	390	0,623
23052-1300	M6x18	30	53	83	58,1	475	0,920

Divided rigid couplings, stainless steel

Order No.	C (DIN 912-12.9)	D1	D4	L	R	Nominal torque Nm	kg
23052-2100	M4x12	10	29	45	32,7	90	0,185
23052-2120	M4x12	12	29	45	32,7	90	0,180
23052-2140	M5x16	14	34	50	39,1	160	0,272
23052-2150	M5x16	15	34	50	39,1	160	0,266
23052-2160	M5x16	16	34	50	39,1	160	0,261
23052-2190	M6x18	19	42	65	48,2	260	0,520
23052-2200	M6x18	20	42	65	48,2	300	0,518
23052-2250	M6x18	25	45	75	50,8	325	0,623
23052-2300	M6x18	30	53	83	58,1	400	0,920

Conical Clamping Rings Form A



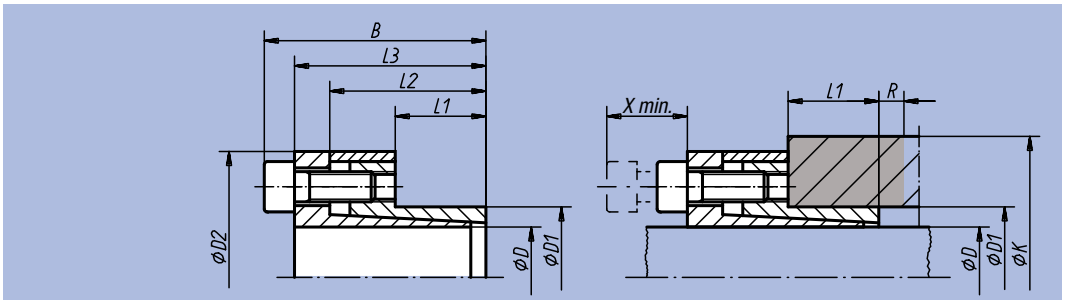

Material:
Steel 1.0503

Surface finish:
Natural finish

Sample order:
nlm 23350-2028

Note:
The Form A cone clamping rings are particularly suitable for connecting thin-walled hubs to a shaft. The large clamping surface guarantees the hub will be centred running true in the plane.
Further advantages are: smooth, cheap shafts and hubs, no weakness caused by grooves, great fatigue strength.
Application: see Technical Information.

The gap X min. must be maintained if the clamping ring is to be loosened without dismantling the neighbouring component. The specified minimum values for K apply if the hub overhang is R >/= 0.5 (K-D1).

Order No.	D	D1	D2	B	L1	L2	L3	Torque M Nm transmissible at tightening torque MS	Axial force F kN transmissible at tightening torque MS	Surface pressure shaft P N/mm²	Surface pressure hub P N/mm²	Number of clamping screws	Clamping screws tightening torque M in Nm	Elasticity limit Re (N/mm²) of the hub material 200 K min. mm	250 K min. mm	280 K min. mm	320 K min. mm	400 K min. mm	X min. mm
23350-2028	20	28	50	44	18	31	38	186	19	156	111	4 x M6	15	64	57	54	51	47	30
23350-2534	25	34	56	51	25	38	45	232	19	90	66	4 x M6	15	62	56	54	51	48	30
23350-3041	30	41	62	51	25	38	45	418	28	112	84	6 x M6	15	78	71	68	66	60	30
23350-3547	35	47	69	56	30	43	50	650	37	107	80	8 x M6	15	90	82	78	75	69	30
23350-4053	40	53	75	56	30	43	50	743	37	94	71	8 x M6	15	94	87	83	80	75	30
23350-4559	45	59	85	73	40	57	65	1563	69	114	87	8 x M8	35	119	108	103	97	90	35
23350-5065	50	65	92	78	45	62	70	1737	69	114	88	10 x M8	35	132	119	114	108	99	35
23350-6077	60	77	104	83	50	67	75	2344	78	85	67	10 x M8	35	137	125	120	115	108	35

Conical Clamping Rings Form B



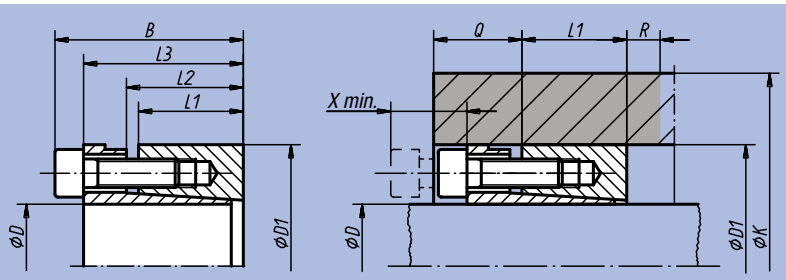

Material:
Steel 1.0503

Surface finish:
Natural finish

Sample order:
nlm 23351-3560

Note:
The cone clamping rings 23351 can be fully recessed in a hub connection. The particular advantage of this arrangement is also the transfer of higher torques.
Application: see Technical Information.

The gap X must be maintained if the clamping ring is to be loosened without dismantling the neighbouring component. The specified minimum values for K apply if the hub overhangs are Q >/= 0.5 (K-D1) and R >/= 0.5 (K-D1). If the hub is axially connected immovably to the shaft even before the clamping elements are fitted, the lower values for 23352 apply to M, F, P shaft, P hub and K min.

Order No.	D	D1	B	L1	L2	L3	Torque M Nm transmissible at tightening torque MS	Axial force F kN transmissible at tightening torque MS	Surface pressure		Number of clamping screws	Clamping screws tightening torque M in Nm	Elasticity limit Re (N/mm²) of the hub material					X min. mm
									shaft P N/mm²	hub P N/mm²			200 K min. mm	250 K min. mm	280 K min. mm	320 K min. mm	400 K min. mm	
23351-2047	20	47	48	26	31	42	445	45	259	110	6 x M6	15	87	80	77	74	70	35
23351-2550	25	50	48	26	31	42	557	45	207	104	6 x M6	15	89	83	80	77	73	35
23351-3055	30	55	48	26	31	42	668	45	173	94	6 x M6	15	93	87	84	81	77	35
23351-3560	35	60	48	26	31	42	1039	59	197	115	8 x M6	15	120	109	104	99	92	35
23351-4065	40	65	48	26	31	42	1187	59	173	106	8 x M6	15	123	113	108	103	96	35
23351-4575	45	75	58	30	36	50	1873	83	182	109	6 x M8	35	128	120	117	113	107	40
23351-5080	50	80	58	30	36	50	2082	83	218	137	8 x M8	35	167	151	145	137	127	40
23351-6090	60	90	58	30	36	50	3331	111	182	121	8 x M8	35	173	159	153	146	136	40

Conical Clamping Rings Form C



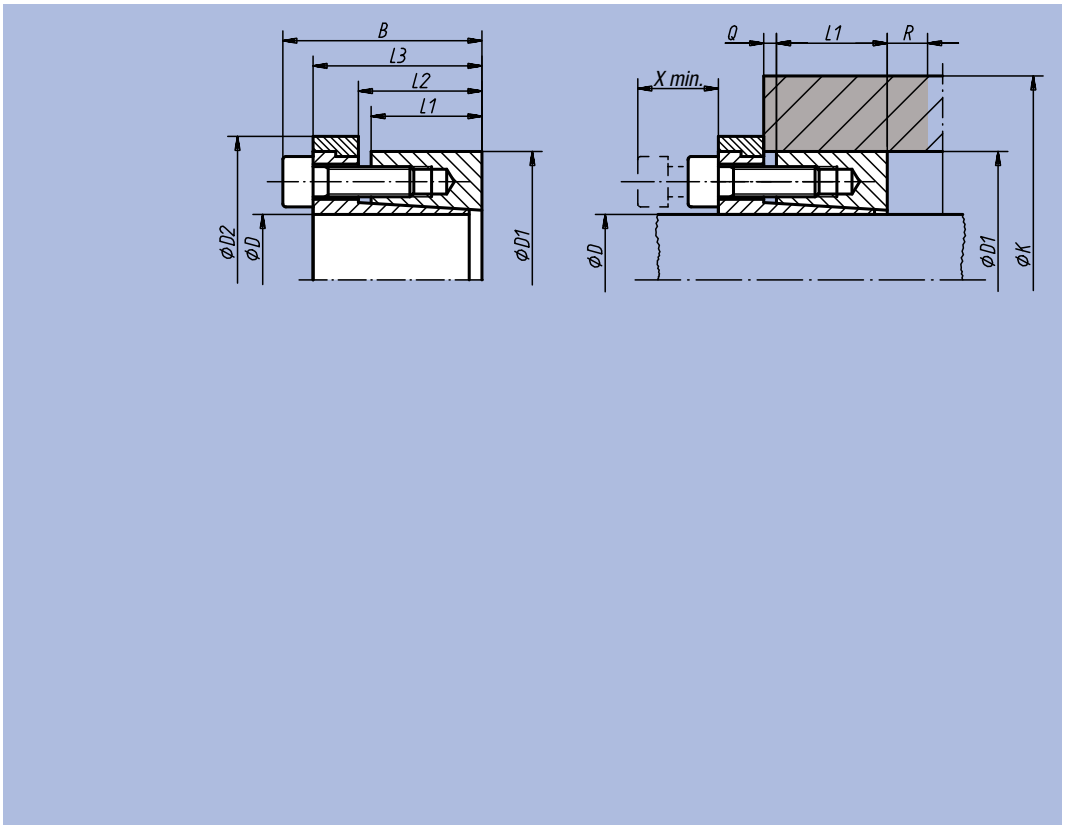

Material:
Steel 1.0503

Surface finish:
Natural finish

Sample order:
nlm 23352-2047

Note:
The Form C clamping rings can be used very universally. The lateral stop secures the axial position of the hub: see Technical Information.

The gap X must be maintained if the clamping ring is to be loosened without dismantling the neighbouring component. The specified minimum values for K apply if the hub overhangs are Q >/= L2-L1 and R >/= 0.5 (K-D1).

Order No.	D	D1	D2	B	L1	L2	L3	Torque M Nm transmissible at tightening torque MS	Axial force F kN transmissible at tightening torque MS	Surface pressure		Number of clamping screws	Clamping screws tightening torque M in Nm	Elasticity limit Re (N/mm²) of the hub material					X min. mm
										shaft P N/mm²	hub P N/mm²			200 K min. mm	250 K min. mm	280 K min. mm	320 K min. mm	400 K min. mm	
23352-2047	20	47	53	48	26	31	42	279	28	162	69	6 x M6	15	81	74	71	69	64	35
23352-2550	25	50	56	48	26	31	42	348	28	130	65	6 x M6	15	83	77	74	71	67	35
23352-3055	30	55	61	48	26	31	42	418	28	108	59	6 x M6	15	87	81	79	76	72	35
23352-3560	35	60	66	48	26	31	42	650	37	123	72	8 x M6	15	99	92	89	86	81	35
23352-4065	40	65	71	48	26	31	42	743	37	108	66	8 x M6	15	103	96	93	90	86	35
23352-4575	45	75	81	58	30	36	50	1172	52	114	68	6 x M8	35	121	113	109	105	100	40
23352-5080	50	80	86	58	30	36	50	1302	52	137	85	8 x M8	35	137	127	123	118	111	40
23352-6090	60	90	96	58	30	36	50	2084	69	114	76	8 x M8	35	146	137	132	128	121	40

Conical Clamping Rings Form D



Material:
Steel 1.0503

Surface finish:
Natural finish

Sample order:
nlm 23354-0616

Note:
The conical clamping rings form D are suitable in particular for applications that require a small building volume and low surface pressure. The cone clamping rings can be fully recessed in a hub connection.
Application: see Technical Information.

The gap X min. must be maintained if the clamping ring is to be loosened without dismantling the neighbouring component. The specified minimum values for K apply if the hub overhangs are Q >/= 0.5 (K-D1) and R >/= 0.5 (K-D1).

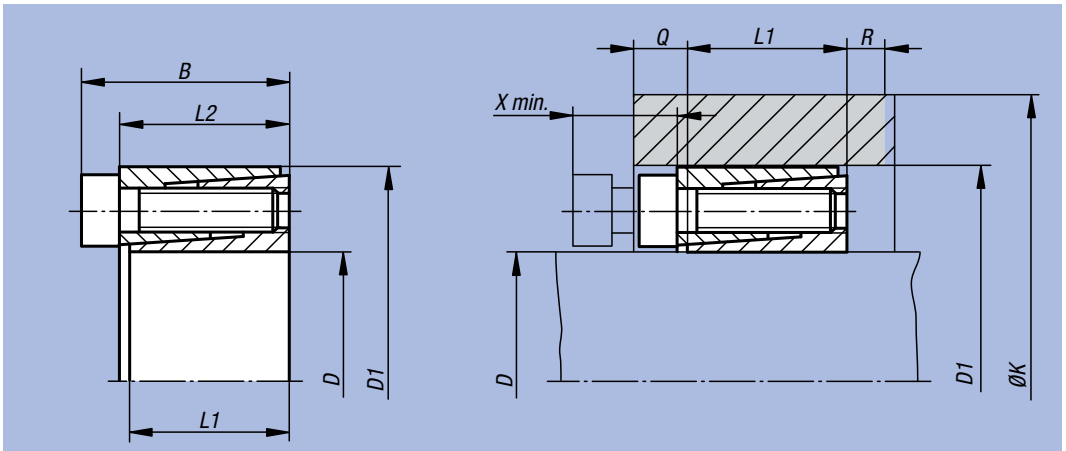

Order No.	D	D1	B	L1	L2	Torque M Nm transmissible at tightening torque MS	Axial force F kN transmissible at tightening torque MS	Surface pressure shaft P N/mm²	Surface pressure hub P N/mm²	Number of clamping screws	Clamping screws tightening torque M in Nm	Elasticity limit Re (N/mm²) of the hub material 200 K min. mm	250 K min. mm	280 K min. mm	320 K min. mm	400 K min. mm	X min. mm
23354-0616	6	16	13,5	10,5	11	6	2	150	55	3 x M2,5	1,2	19,06	18,65	18,61	18,6	18,45	15
23354-0818	8	18	13,5	10,5	11	10	2,5	110	50	4 x M2,5	1,2	21,1	20,64	20,64	20,64	20,08	15
23354-0920	9	20	15,5	12,5	13	15	3	120	55	4 x M2,5	1,2	23,83	23,83	23,26	23,26	23,26	15
23354-1020	10	20	15,5	12,5	13	15	3	110	55	4 x M2,5	1,2	23,83	23,26	23,26	23,26	23,03	15
23354-1222	12	22	15,5	12,5	13	20	3	90	50	4 x M2,5	1,2	25,79	25,23	25,23	25,23	25,01	15
23354-1426	14	26	20	16,5	17	35	5	105	55	4 x M3	2,1	30,98	30,24	30,24	30,24	29,94	20
23354-1528	15	28	20	16,5	17	40	5	100	50	4 x M3	2,1	32,83	32,11	32,11	32,11	31,83	20
23354-1632	16	32	21	16,5	17	70	8	130	65	4 x M4	4,9	39,4	38,27	38,27	38,27	37,83	20
23354-1835	18	35	25	20	21	80	8	115	60	4 x M4	4,9	42,39	41,28	41,28	41,28	40,84	25
23354-2038	20	38	26	20	21	150	15	140	75	4 x M5	9,7	48,37	46,76	46,76	46,76	46,13	25
23354-2240	22	40	26	20	21	160	14	130	70	4 x M5	9,7	50,08	48,52	48,52	48,52	47,92	25
23354-2447	24	47	32	25	26	250	20	140	75	4 x M6	16,5	59,83	57,83	57,83	57,83	57,05	30
23354-2547	25	47	32	25	26	260	20	135	75	4 x M6	16,5	59,83	57,83	57,83	57,83	57,05	30
23354-2850	28	50	32	25	26	440	30	185	100	6 x M6	16,5	69,33	66,14	66,14	66,14	64,91	30
23354-3055	30	55	32	25	26	470	30	175	95	6 x M6	16,5	74,95	71,69	71,69	71,69	70,44	30
23354-3255	32	55	32	25	26	500	30	165	95	6 x M6	16,5	74,95	71,69	71,69	71,69	70,44	30
23354-3560	35	60	37	28	29	730	40	165	95	8 x M6	16,5	81,76	78,21	78,21	78,21	76,84	30

Application using standard conical clamping rings

General notes:
Both conical sleeves are slotted so that rough gaps can be bridged. We recommend the following gaps in the contact surfaces:
h8 for the shaft,
H8 for the hub drill hole D.
The mean surface roughness R_Z at the contact surfaces of shaft and hub should be $R_Z \leq 16$ µm.

Assembly:
1. Unscrew clamping screws by a few threads.
2. Unscrew as many clamping screws as there are mould threads and screw them into mould drill holes so that the inner and outer parts are kept apart.
3. Lightly lubricate the clamping element. Do not use oil containing molybdenum sulphide or high-pressure additives and do not use grease.
4. Insert the clamping element into the part to be braced and push onto the shaft.
5. Remove the screws from the mould threads and screw them into the clamping holes again.
6. Tighten the clamping screws by hand via a double junction; align the hub while doing so.
7. Tighten the clamping screws with a torque spanner via the double junction to half the tightening torque M_s. Then tighten via double junction to full tightening torque.
8. Retighten the clamping screws in sequence to full torque several times. Tightening is complete only when no more screws can be turned.

Dismounting
1. Unscrew clamping screws by a few threads.
2. Unscrew as many clamping screws as there are mould threads and screw them into threaded drill holes.
3. Tighten opposite offset screws. This releases.

Form A

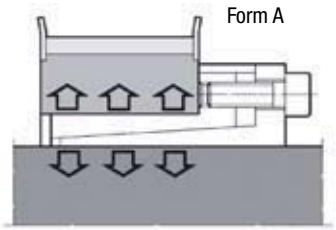

Form B

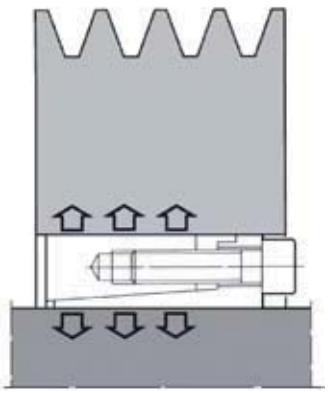

Form C

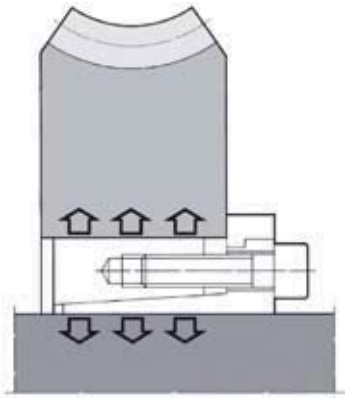

Form D

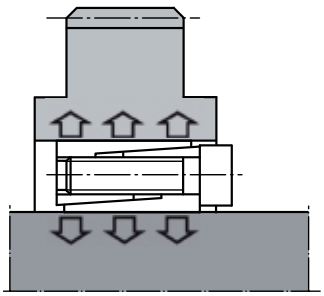

Notes:

Shaft-Hub Clamping Sets

stainless steel



Material:
Stainless steel 1.4301

Surface finish:
Natural finish

Sample order:
nlm 23370-040008

Note:
Self-centring and play-free shaft-hub clamping sets with a very low moment of inertia and minimal space required. The clamping sets produce a connection between shaft and hub actuated by spring. Quick assembly and disassembly with a central nut. The connection can be disassembled by means of an extractor.
Run-out accuracy of the clamping sets ±0.01 mm.

Installation:
In order to reach the specified torque, the clamping set must be installed free of grease. The clamping set must seat solidly with the entire length upon the shaft. For maximal torque, shaft and hub must be sufficiently firm (lowest elastic limit 350 N/mm², e.g., C45).

Requisite tolerances:
Shaft: h7
Hub: H7

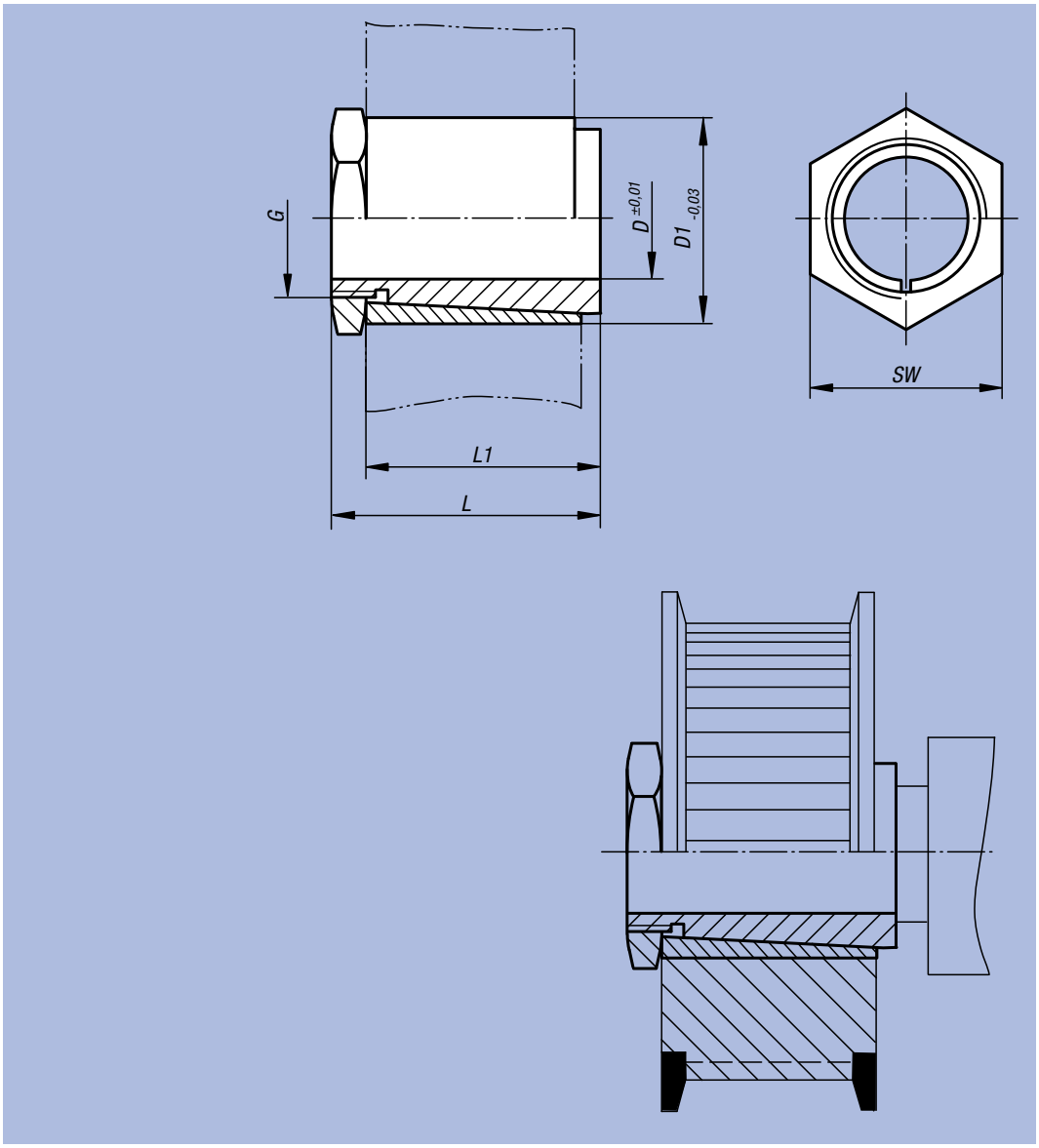

Order No.	D	D1	L	L1	G	SW	Tightening torque max. Nm	Torque transmissible T Nm	kg
23370-040008	4	8	15	12,5	M6x0,5	8	4	3	0,004
23370-050010	5	10	15	12,5	M8x0,5	10	5	4	0,007
23370-060010	6	10	15	12,5	M8x0,5	10	8	7	0,005
23370-063510	6,35	10	15	12,5	M8x0,5	10	8	7	0,005
23370-080014	8	14	22	19	M12x1	17	15	14	0,018
23370-090014	9	14	22	19	M12x1	17	15	14	0,015
23370-100017	10	17	22	18,5	M15x1	19	19	18	0,029
23370-120017	12	17	22	18,5	M15x1	19	19	18	0,026
23370-140020	14	20	28	23	M17x1	22	25	24	0,035
23370-150020	15	20	28	23	M17x1	22	25	24	0,036
23370-160023	16	23	28	23	M20x1	26	27	26	0,051
23370-190025	19	25	28	23	M22x1	27	30	29	0,047
23370-200028	20	28	28	23	M25x1	30	32	31	0,067

Notes:

Fitting and maintenance of universal joint cardan shafts

Cardan joints:
Cardan joints are particularly suited to the transfer of forces at higher revs. The rev limit is dependent on the working angle. The largest angle is 45° for all joint types (double joint 90°).
However, only low revs should be used at angles over 20° (or 40°). Cardan joints in standard finish can be used up to 2000 rpm, needle-bearing joints up to 4000 rpm. Needle-bearing mounted joints are normally only used at revs over 1000 rpm.

Course of Movement
The single joints transfer the evenly introduced movement unevenly as, for every revolution of the driving shaft, the driven shaft is accelerated and slowed twice. The degree of unevenness depends on the working angle (see Figures 1 and 2).

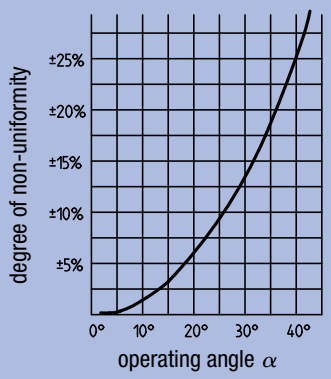

picture 1

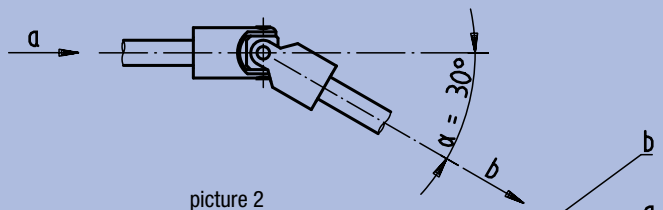

picture 2

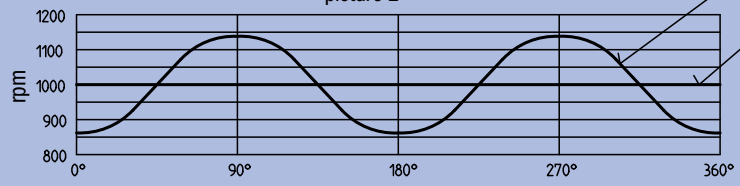

To achieve an even movement, 2 single or a double joint have to be used. Where slight unevenness in rotation can be accepted or only slight angles of diffraction are concerned, only a single joint may be used. Furthermore, for an even transfer of movement, the diffraction angle at both ends of the intermediate shaft must be the same size (Figures 3 and 4).

picture 3 and 4

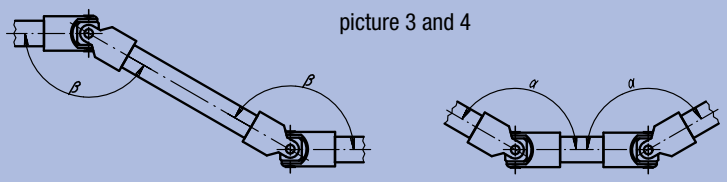

Maintenance
The joints should be lubricated at least once per day where they are in uninterrupted use.
In dirty factories we recommend covering the joints with a protective rubber cover.
In cases where fitting is critical, please consult our Technical Sales staff.

Note:
Furthermore, the bearing must be fitted as closely as possible alongside the ball-and-socket joint.

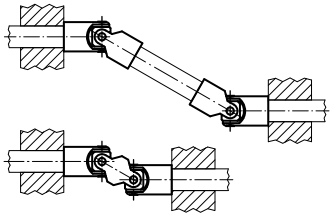

Cardan Joints with slide bearing

DIN 808

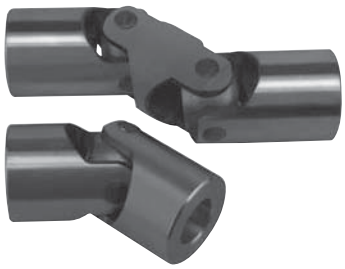

Material:
Steel

Surface finish:
Joint and slide bearing hardened

Sample order:
nlm 23403-06034

Note:
Cardan Joints with slide bearing can be swivelled by 45° (single joint) or by 90° (double joint).

Max. transferable torque (Nm) at 150 r.p.m.; operation angle $\alpha < 5°$.

* Bore hole depth is smaller than DIN 808.

On request:

square

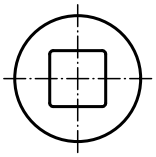

hexagon

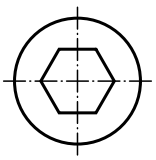

single

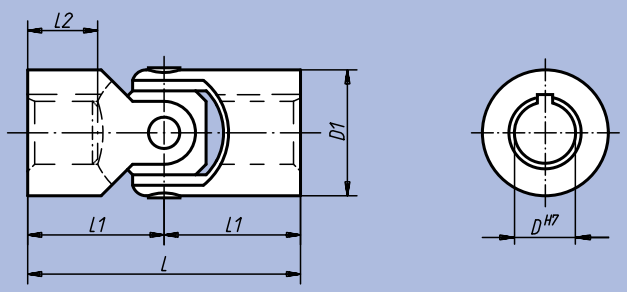

double

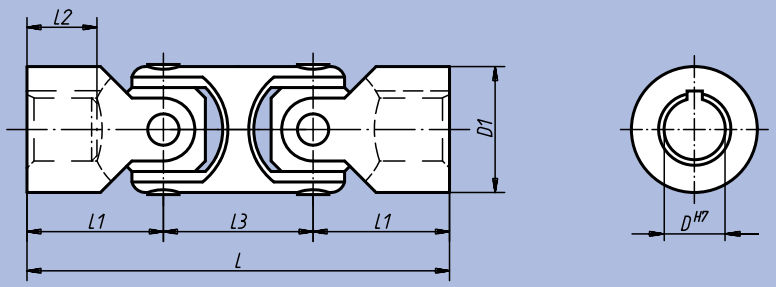

feather slot to DIN 6885-1

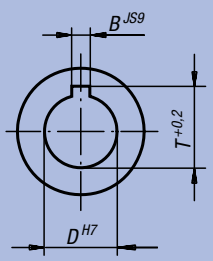

Order No. Surface finish Locating hole without slot	Order No. Surface finish Locating hole with slot	Surface finish	D	D1	L	L1	L2	L3	B	T	Max. torque Nm	static fracture torque in Nm	kg
23403-06034	-	Single cardan joint	6	16	34	17	9*	22	2	7	7	40	0,035
23403-08040	23403-108040	Single cardan joint	8	16	40	20	11*	22	2	9	7	40	0,040
23403-10048	23403-110048	Single cardan joint	10	20	48	24	12*	26	3	11,4	16	90	0,075
23403-12056	23403-112056	Single cardan joint	12	25	56	28	14*	30	4	13,8	26	150	0,140
23403-16068	23403-116068	Single cardan joint	16	32	68	34	16*	37	5	18,3	52	300	0,290
23403-20082	23403-120082	Single cardan joint	20	40	82	41	20*	47	6	22,8	100	650	0,530
23403-25104	23403-125104	Single cardan joint	25	50	104	52	25*	56	8	28,3	210	1200	1,140
23404-06056	-	Double cardan joint	6	16	56	17	9*	22	2	7	7	40	0,055
23404-08062	23404-108062	Double cardan joint	8	16	62	20	11*	22	2	9	7	40	0,080
23404-10074	23404-110074	Double cardan joint	10	20	74	24	12*	26	3	11,4	16	90	0,145
23404-12086	23404-112086	Double cardan joint	12	25	86	28	14*	30	4	13,8	26	150	0,240
23404-16104	23404-116104	Double cardan joint	16	32	104	34	16*	37	5	18,3	52	300	0,445
23404-20128	23404-120128	Double cardan joint	20	40	128	41	20*	47	6	22,8	100	650	0,860
23404-25160	23404-125160	Double cardan joint	25	50	160	52	25*	56	8	28,3	210	1200	1,680

Cardan Joints with needle bearing

DIN 808

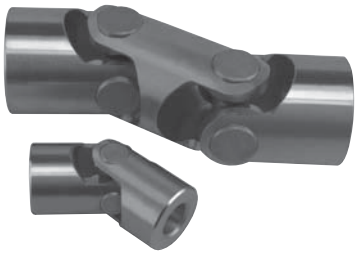

Material:
Steel

Surface finish:
Cardan shaft ground, natural finish

Sample order:
nlm 23407-12086

Note:
Cardan Joints with needle bearing are used for transfering speeds between 1000 r.p.m. up to 4000 r.p.m. They have a minimal clearance and are maintenance free.

Max. transferable torque (Nm) at 150 r.p.m.; operation angle $\alpha < 5°$.

* Bore hole depth is smaller than DIN 808.

On request:

square

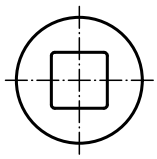

hexagon

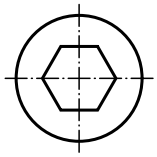

single

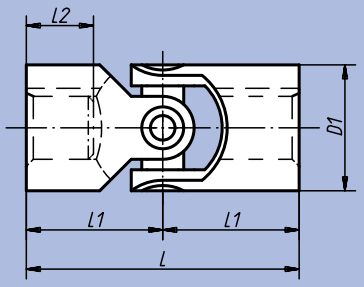

double

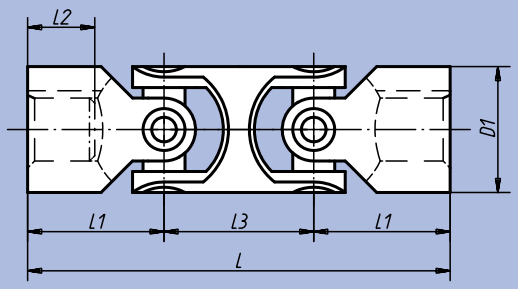

feather slot to DIN 6885-1

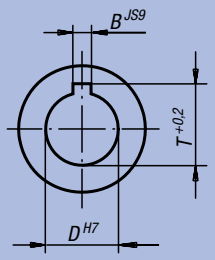

Order No. Surface finish Locating hole without slot	Order No. Surface finish Locating hole with slot	Surface finish	D	D1	L	L1	L2	L3	B	T	Max. torque Nm	static fracture torque in Nm	kg
23406-10048	23406-110048	Single cardan joint	10	20	48	24	12*	26	3	11,4	10	80	0,085
23406-12056	23406-112056	Single cardan joint	12	25	56	28	14*	30	4	13,8	16	120	0,130
23406-16068	23406-116068	Single cardan joint	16	32	68	34	16*	37	5	18,3	35	250	0,235
23406-20082	23406-120082	Single cardan joint	20	40	82	41	20*	47	6	22,8	80	500	0,455
23406-25104	23406-125104	Single cardan joint	25	50	104	52	25*	56	8	28,3	130	800	0,975
23406-30166	23406-130166	Single cardan joint	30	63	166	83	38*	72	8	33,3	240	1500	2,850
23406-35140	23406-135140	Single cardan joint	35	70	140	70	35*	72	10	38,3	360	2200	3,150
23407-10074	23407-110074	Double cardan joint	10	20	74	24	12*	26	3	11,4	10	80	0,115
23407-12086	23407-112086	Double cardan joint	12	25	86	28	14*	30	4	13,8	16	120	0,180
23407-16104	23407-116104	Double cardan joint	16	32	104	34	16*	37	5	18,3	35	250	0,335
23407-20128	23407-120128	Double cardan joint	20	40	128	41	20*	47	6	22,8	80	500	0,650
23407-25160	23407-125160	Double cardan joint	25	50	160	52	25*	56	8	28,3	130	800	1,350
23407-30238	23407-130238	Double cardan joint	30	63	238	83	38*	72	8	33,3	240	1500	4,100
23407-35212	23407-135212	Double cardan joint	35	70	212	70	35*	72	10	38,3	360	2200	4,500

Cardan Joints with slide bearing

version coarse DIN 808



Material:
Steel

Surface finish:
Natural finish

Sample order:
nlm 23410-10074

Note:
Cardan Joints (version coarse) are suitable for the manual drive of lifting tables, slides, louvres etc. resp. for short-time mechanical drives at low speed.
Cardan Joints with slide bearing can be swivelled by 35° (single) or by 70° (double).

Max. transferable torque (Nm) at 150 r.p.m.; operation angle $\alpha < 5°$.

On request:

square

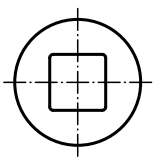

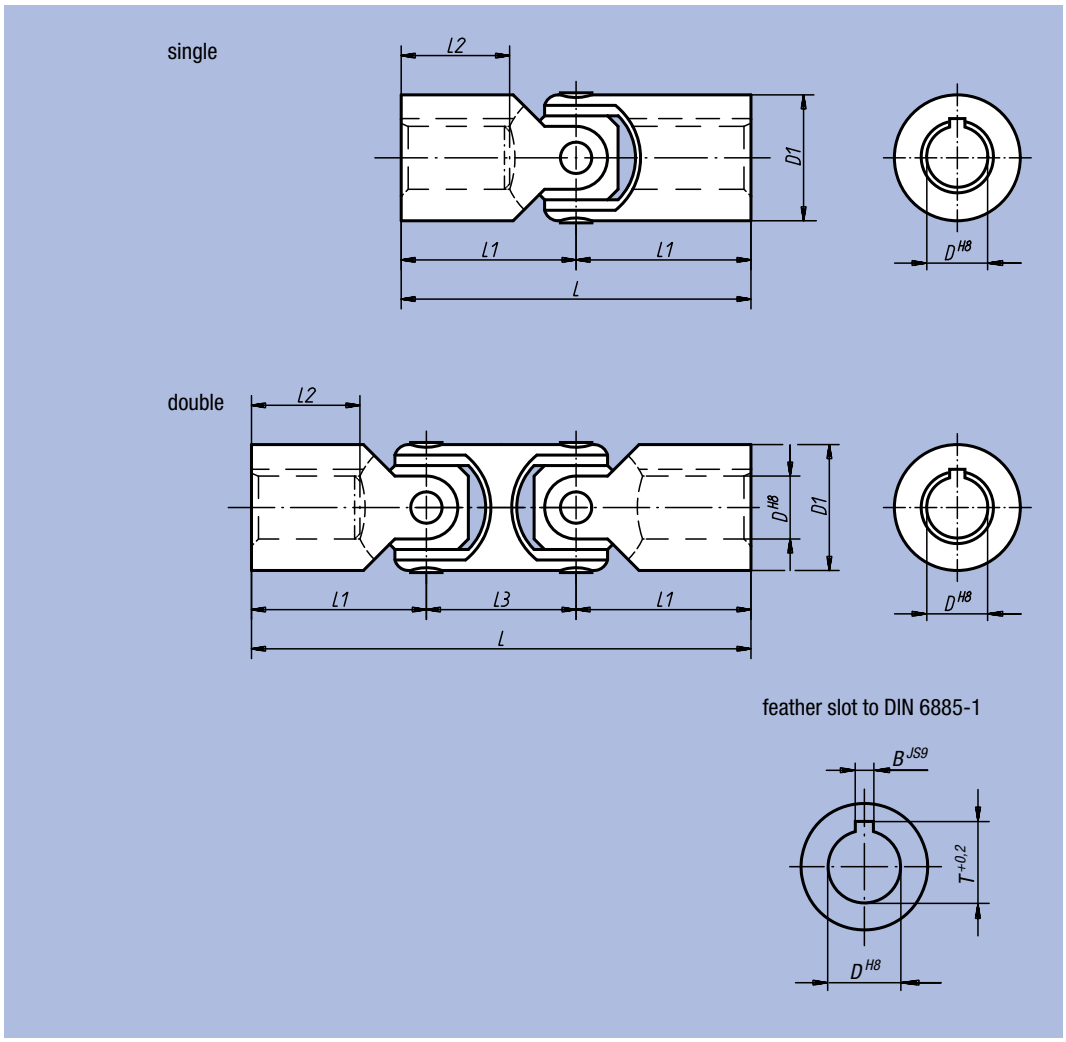

Order No. Surface finish Locating hole without slot	Order No. Surface finish Locating hole with slot	Surface finish	D	D1	L	L1	L2	L3	B	T	Max. torque Nm	static fracture torque in Nm	kg
23409-08042	23409-108042	Single cardan joint	8	13	42	21	11	18	2	9	4	25	0,030
23409-10052	23409-110052	Single cardan joint	10	16	52	26	15	22	3	11,4	6	35	0,050
23409-12062	23409-112062	Single cardan joint	12	20	62	31	18	26	4	13,8	13	80	0,095
23409-16074	23409-116074	Single cardan joint	16	25	74	37	22	30	5	18,3	23	140	0,180
23409-20086	23409-120086	Single cardan joint	20	32	86	43	25	37	6	22,8	46	280	0,330
23409-25108	23409-125108	Single cardan joint	25	40	108	54	32	47	8	28,3	90	600	0,650
23409-32132	23409-132132	Single cardan joint	32	50	132	66	40	56	10	35,3	180	1100	1,260
23410-08060	23410-108060	Double cardan joint	8	13	60	21	11	18	2	9	4	25	0,045
23410-10074	23410-110074	Double cardan joint	10	16	74	26	15	22	3	11,4	6	35	0,075
23410-12088	23410-112088	Double cardan joint	12	20	88	31	18	26	4	13,8	13	80	0,140
23410-16104	23410-116104	Double cardan joint	16	25	104	37	22	30	5	18,3	23	140	0,260
23410-20124	23410-120124	Double cardan joint	20	32	124	43	25	37	6	22,8	46	280	0,485
23410-25156	23410-125156	Double cardan joint	25	40	156	54	32	47	8	28,3	90	600	0,950
23410-32188	23410-132188	Double cardan joint	32	50	188	66	40	56	10	35,3	180	1100	1,800

Telescopic Cardan Shafts



Material:
Steel

Surface finish:
Natural finish

Sample order:
nlm 23412-120260

Note:
These Cardan Shafts consist of two Cardan Joints (version coarse), one square intermediate shaft and a sliding sleeve. They are available in every desired length. Telescopic Cardan Shafts are suitable for manual drives resp. for short-time mechanical drive at low speed.

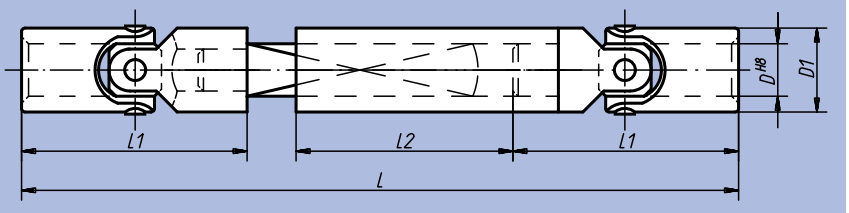

application example:

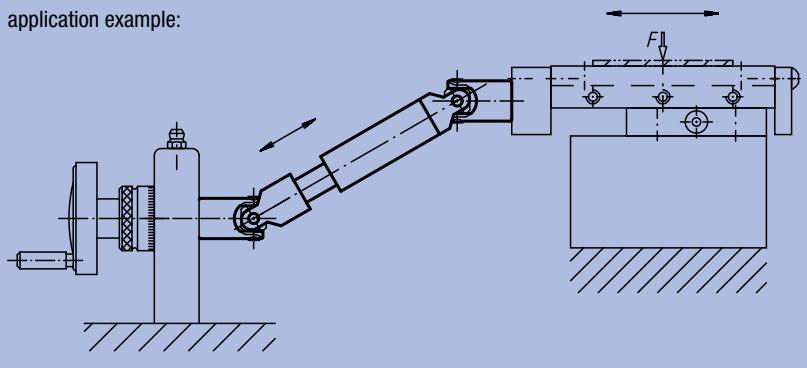

Order No.	D	D1	L	L1	L2	Retractability	Shaft profile square	static fracture torque in Nm	kg
23412-100230	10	16	230	52	120	80	8	35	0,400
23412-120260	12	20	260	62	130	90	10	80	0,600
23412-160340	16	25	340	74	160	110	12	140	1,000
23412-200420	20	32	420	86	200	130	16	280	2,400

Protective Rubber Covers

for ball-and-socket joints or cardan joints (single)



Sample order:
nlm 23414-16

Note:
The protective rubber sleeves (single) fit single joints from 16 mm outer diameter onwards. They consist of a rubberised elastic, oil-resistant plastic and are made using the immersion process.
The Order No. 23414-50 is supplied with 4-fold bellows.

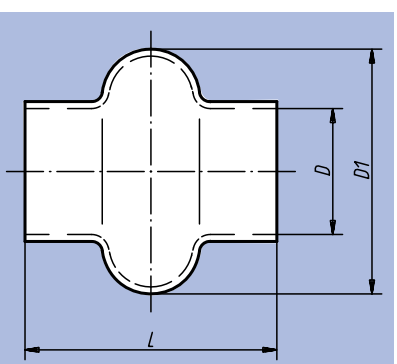

Order No.	D	D1	L	Suitable for single joints of shaft Ø (D1)	≈ g
23414-16	16	35	32	16	6,7
23414-20	20	36	40	20	6,8
23414-24	24	44	45	24	16,1
23414-28	28	51	50	28	17,9
23414-32	32	62	55	32	26,4
23414-36	36	65	65	36	24,8
23414-40	40	73	75	40	28,6
23414-45	45	80	85	45	25,7
23414-50	50	90	95	50	63,2
23414-65	65	110	125	63	87,5
23414-70	70	125	137	70	134,3

Protective Rubber Covers

for ball-and-socket joints or cardan joints (double)



Sample order:
nlm 23415-16

Note:
The protective rubber sleeves (double) fit double joints from 16 mm outer diameter onwards. They consist of a rubberised elastic, oil-resistant plastic and are made using the immersion process.

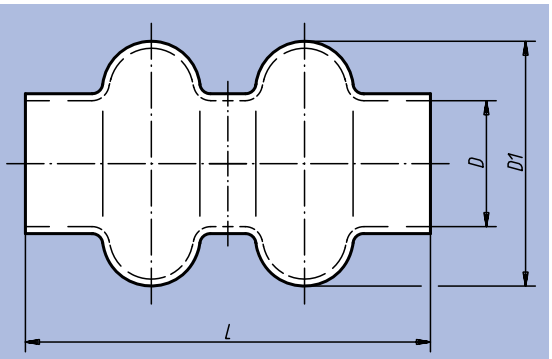

Order No.	D	D1	L	Suitable for double joints of shaft Ø (D1)	≈ g
23415-16	16	35	55	16	9,8
23415-20	20	36	65	20	9,8
23415-24	24	44	70	24	23,7
23415-28	28	51	80	28	24,1
23415-32	32	62	90	32	49,3
23415-40	40	73	120	40	79,0
23415-50	50	90	155	50	106,6

Quick Plug Couplings

with radial offset compensation



Material, surface finish:
Coupling part and claw in steel, heat-treated and phosphated.
Nut (DIN 439) in steel, black oxide finish; quality class 8.8

Sample order:
nlm 23450-16

Note:
Quick Plug Couplings with radial offset compensation for multiple applications, e.g. as a link between a piston rod and a linear-movement unit. Assembly and disassembly of this simple, solid and two-part coupling is by means of a T-slot; a manual re-adjustment is not necessary.
The Quick Plug Coupling can be linked to all commonly used pneumatic and hydraulic lifting cylinders via the connecting thread.

The Quick Plug Coupling does not transmit any torque.

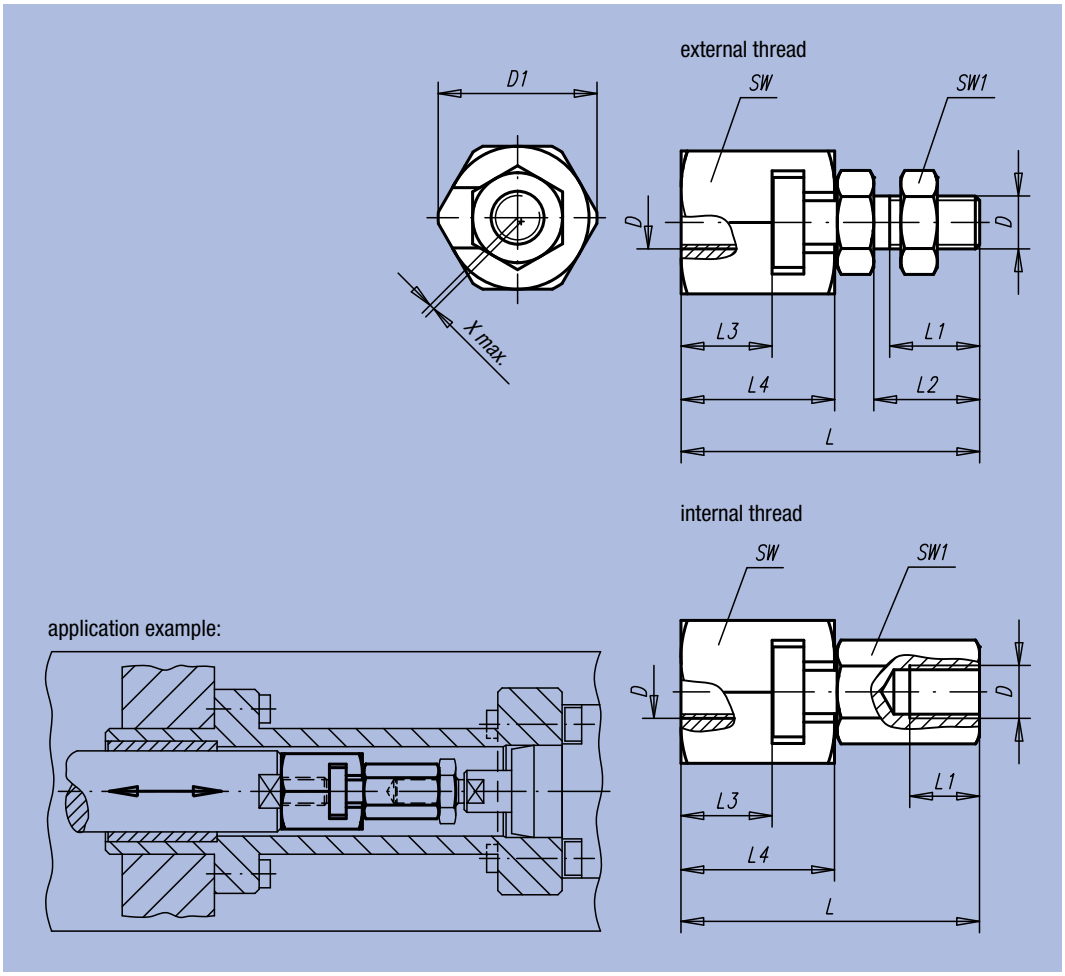

Order No.	Surface finish	D	D1	~L	L1 min.	L2	L3 min.	L4	SW	SW1	Max. radial shift compensation	Max. permissible tensile and compressive stress in kN	□ kg
23450-06	Internal thread	M6	21	37,5	11	14	9	18	19	10	0,6	2,5	0,045
23450-08	Internal thread	M8	26	45	13,5	17	11,5	22,5	24	13	0,7	4,5	0,089
23450-10	Internal thread	M10	30	56,2	15	20	16	29	27	17	0,7	6,5	0,155
23450-101	Internal thread	M10x1,25	30	56,2	15	20	16	29	27	17	0,7	6,5	0,155
23450-12	Internal thread	M12	32,5	66,7	17,5	25	17	34	30	19	0,8	10	0,220
23450-121	Internal thread	M12x1,25	32,5	66,7	17,5	25	17	34	30	19	0,8	10	0,220
23450-16	Internal thread	M16	39	83	22	30	23	42	36	24	1	18	0,397
23450-161	Internal thread	M16x1,5	39	83	22	30	23	42	36	24	1	18	0,398
23450-20	Internal thread	M20	44	93,5	25	35	23,5	45,5	41	30	1	30	0,599
23450-201	Internal thread	M20x1,5	44	93,5	25	35	23,5	45,5	41	30	1	30	0,594
23450-0614	External thread	M6	21	37,5	11	14	9	18	19	10	0,6	2,5	0,042
23450-0817	External thread	M8	26	45	13,5	17	11,5	22,5	24	13	0,7	4,5	0,084
23450-1020	External thread	M10	30	56,2	16	20	16	29	27	17	0,7	6,5	0,144
23450-10201	External thread	M10x1,25	30	56,2	16	20	16	29	27	17	0,7	6,5	0,145
23450-1225	External thread	M12	32,5	66,7	21	25	17	34	30	19	0,8	10	0,205
23450-12251	External thread	M12x1,25	32,5	66,7	21	25	17	34	30	19	0,8	10	0,205
23450-1630	External thread	M16	39	83	25	30	23	42	36	24	1	18	0,384
23450-16301	External thread	M16x1,5	39	83	25	30	23	42	36	24	1	18	0,385
23450-2035	External thread	M20	44	93,5	29	35	23,5	45,5	41	30	1	30	0,568
23450-20351	External thread	M20x1,5	44	93,5	29	35	23,5	45,5	41	30	1	30	0,568

Quick Plug Couplings

with radial offset compensation and screw-on flange



Material, surface finish:
Coupling part and flange in steel, heat-treated and phosphated.
Nut (DIN 439) in steel, black oxide finish; quality class 8.8

Sample order:
nlm 23452-20351

Note:
Quick Plug Couplings with radial offset compensation requiring only little space. Suitable for multiple applications, e.g. as a link between a piston rod and a linear-movement unit. Assembly and disassembly of this simple, solid and two-part coupling is by means of a T-slot; a manual re-adjustment is not necessary.
The Quick Plug Coupling can be linked to all commonly used pneumatic and hydraulic lifting cylinders via the connecting thread.

The Quick Plug Coupling does not transmit any torque.

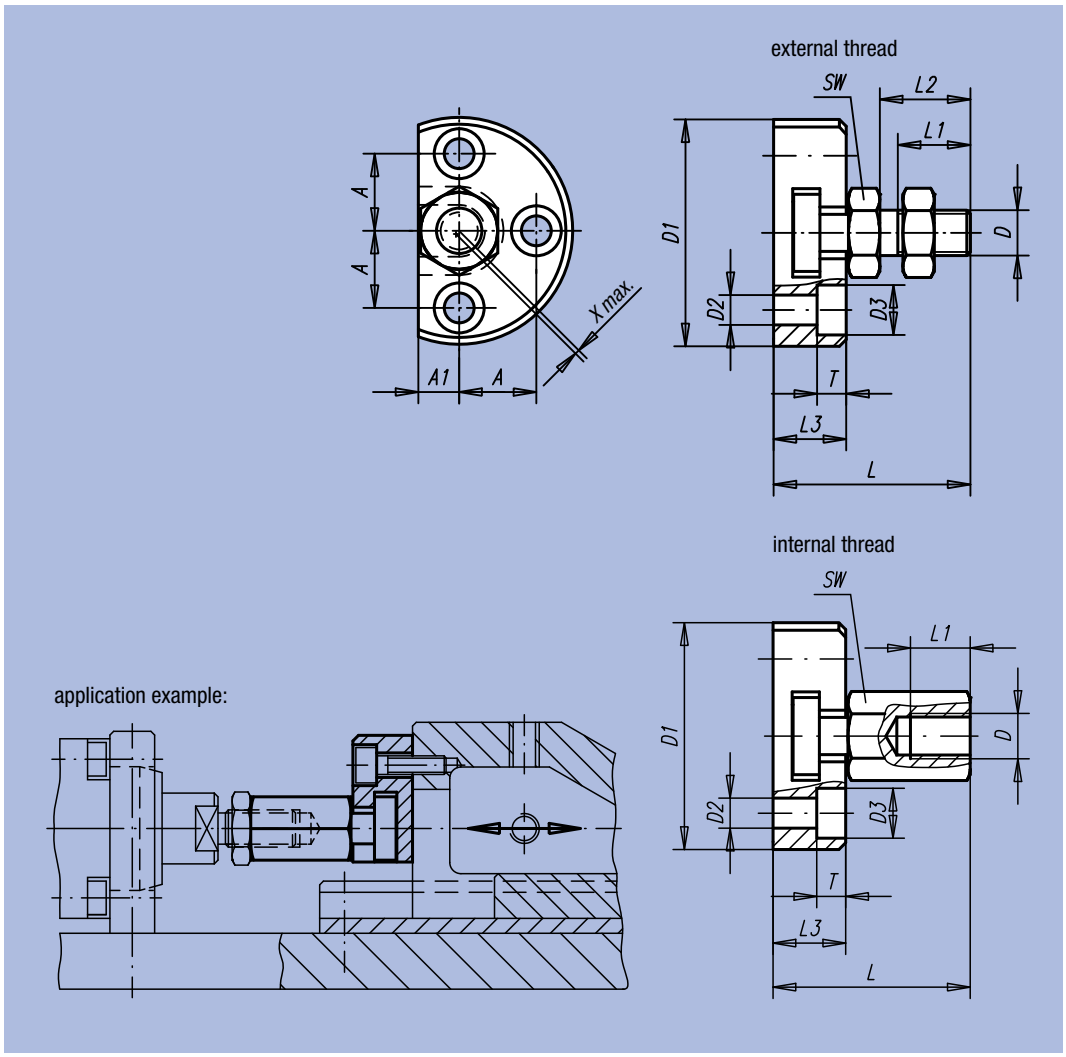

Order No.	Surface finish	D	D1	D2	D3	A	A1	~L	L1 min.	L2	L3	T	SW	Max. radial shift compensation	Max. permissible tensile and compressive stress in kN	□ kg
23452-06	Internal thread	M6	42	5,5	10	14	7	30,5	11	14	11	5,4	10	0,6	2,5	0,076
23452-08	Internal thread	M8	48	6,6	11	16	8	35,5	13,5	17	13	6,4	13	0,7	4,5	0,122
23452-10	Internal thread	M10	50	6,6	11	17	9	43,2	15	20	16	6,4	17	0,7	6,5	0,184
23452-101	Internal thread	M10x1,25	50	6,6	11	17	9	43,2	15	20	16	6,4	17	0,7	6,5	0,184
23452-12	Internal thread	M12	55	6,6	11	19	10	53,2	17,5	25	20,5	6,4	19	0,8	10	0,276
23452-121	Internal thread	M12x1,25	55	6,6	11	19	10	53,2	17,5	25	20,5	6,4	19	0,8	10	0,276
23452-16	Internal thread	M16	65	9	15	22,5	12,5	64	22	30	23	8,5	24	1	18	0,449
23452-161	Internal thread	M16x1,5	65	9	15	22,5	12,5	64	22	30	23	8,5	24	1	18	0,449
23452-20	Internal thread	M20	80	11	18	28	17	74	25	35	26	10	30	1	30	0,845
23452-201	Internal thread	M20x1,5	80	11	18	28	17	74	25	35	26	10	30	1	30	0,840
23452-0614	External thread	M6	42	5,5	10	14	7	30,5	11	14	11	5,4	10	0,6	2,5	0,073
23452-0817	External thread	M8	48	6,6	11	16	8	35,5	13,5	17	13	6,4	13	0,7	4,5	0,116
23452-1020	External thread	M10	50	6,6	11	17	9	43,2	16	20	16	6,4	17	0,7	6,5	0,173
23452-10201	External thread	M10x1,25	50	6,6	11	17	9	43,2	16	20	16	6,4	17	0,7	6,5	0,174
23452-1225	External thread	M12	55	6,6	11	19	10	53,2	21	25	20,5	6,4	19	0,8	10	0,261
23452-12251	External thread	M12x1,25	55	6,6	11	19	10	53,2	21	25	20,5	6,4	19	0,8	10	0,262
23452-1630	External thread	M16	65	9	15	22,5	12,5	64	25	30	23	8,5	24	1	18	0,431
23452-16301	External thread	M16x1,5	65	9	15	22,5	12,5	64	25	30	23	8,5	24	1	18	0,433
23452-2035	External thread	M20	80	11	18	28	17	74	29	35	26	10	30	1	30	0,815
23452-20351	External thread	M20x1,5	80	11	18	28	17	74	29	35	26	10	30	1	30	0,815

Quick Plug Couplings

with angular and radial offset compensation



Material, surface finish:
Coupling part in tempered steel, nitrided, black.
Claw and seat in steel, heat-treated and phosphated.
Nut in tempered steel, phosphated.
Locking nut (EN 24035) in steel, quality class 8.8, black.
Spring in stainless steel

Sample order:
nlm 23454-12

Note:
Quick Plug Coupling, adjustable without axial play, including angular and radial offset compensation. Suitable for multiple applications, e.g. for non-aligned linear-movements. Solid and compact design, no loose elements. Assembly and disassembly is by means of a T-slot; a manual re-adjustment is not necessary. The Quick Plug Coupling can be linked to all commonly used pneumatic and hydraulic lifting cylinders via the connecting thread.

The Quick Plug Coupling does not transmit any torque.

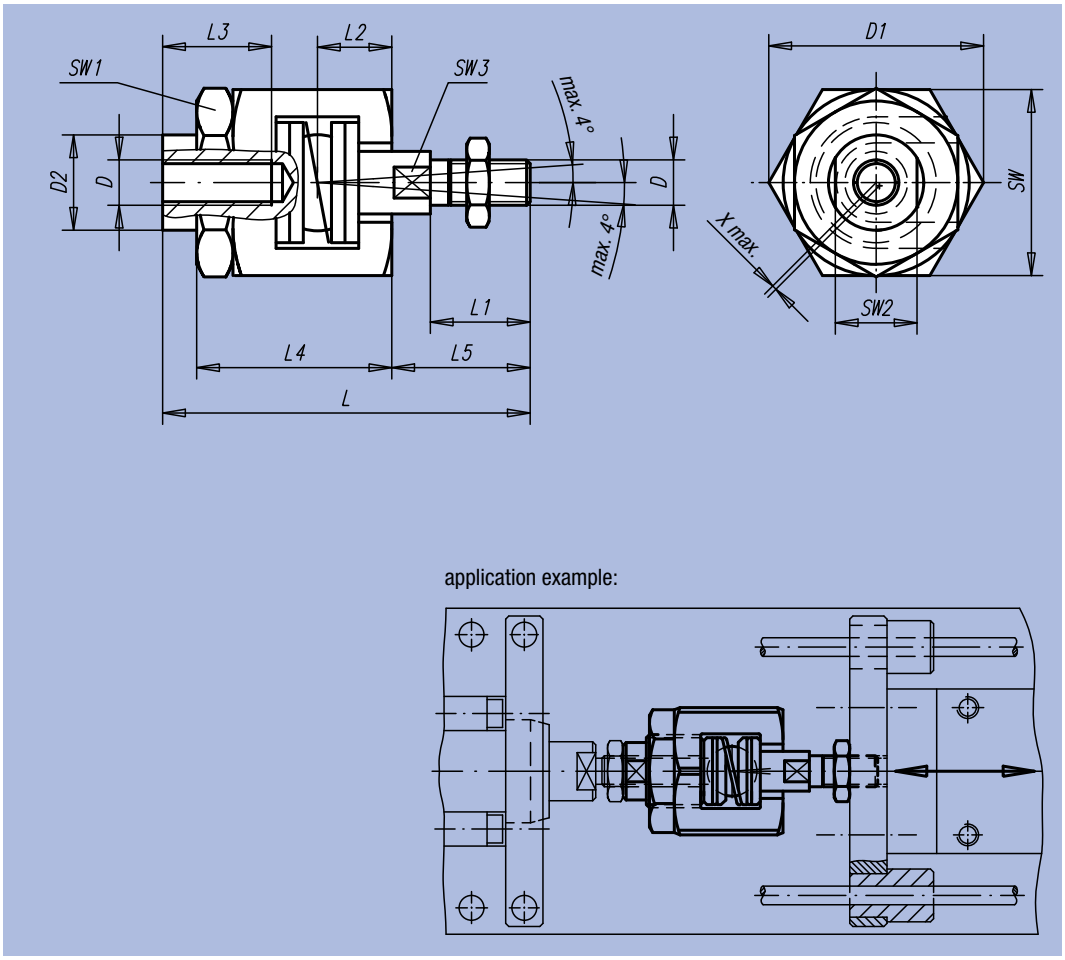

Order No.	D	D1	D2	~L	L1	L2	L3 min.	L4	L5	SW	SW1	SW2	SW3	Max. radial shift compensation	Max. permissible tensile and compressive stress in kN	kg
23454-06	M6	24,5	9,6	52	14	9,5	13	29	18,5	22	19	8	5	0,6	2,5	0,075
23454-08	M8	30	15	63	18	11,5	16	33	23,5	27	24	13	7	0,6	4,5	0,135
23454-10	M10	44	21	81	22	16	24	43	30,5	41	36	18	12	0,7	6,5	0,403
23454-101	M10x1,25	44	21	81	22	16	24	43	30,5	41	36	18	12	0,7	6,5	0,403
23454-12	M12	44	21	85	26	16	24	43	34,5	41	36	18	12	0,7	10	0,405
23454-121	M12x1,25	44	21	85	26	16	24	43	34,5	41	36	18	12	0,7	10	0,409
23454-16	M16	60	32	121	34	26	34	62	45	55	46	27	18	1	18	1,090
23454-161	M16x1,5	60	32	121	34	26	34	62	45	55	46	27	18	1	18	1,094
23454-20	M20	60	32	129	42	26	34	62	53	55	46	27	18	1	30	1,136
23454-201	M20x1,5	60	32	129	42	26	34	62	53	55	46	27	18	1	30	1,143

igubal® Pillow Block Bearings



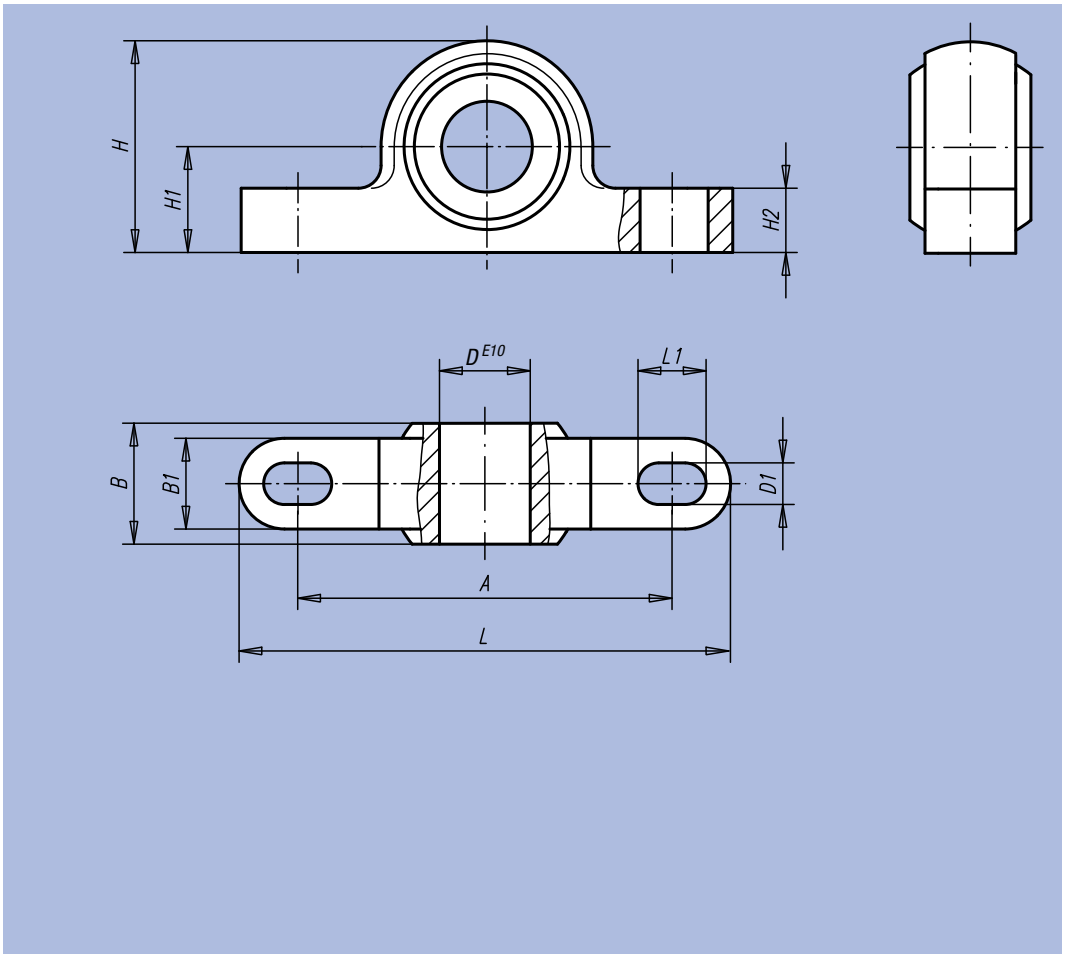

Material:
Housing igumid® G,
spherical ball in iglidur® W300.

Surface finish:
Black

Sample order:
nlm 23500-05

Note:
The ability to pivot allows Pillow Block Bearings to compensate for misalignment and possible shaft deflection. They are easy to install and suitable for the accomodation of rotating, oscillating and linear movements.
igubal® Pillow Block Bearings are maintenance free and conceived for dry running condition.

Installation:
Pillow Block Bearings are designed for mounting with 2 screws.

Pillow Block Bearings are designed with a inside diameter tolerance of E10. The matching shaft should be made to tolerance class h6 and h9.

Order No.	A	B	B1	D	D1	H	H1	H2	L	L1	Max. swivel angle	Max. static tensile stress N		Max. static axial pressure stress N	Max. tightening torque for oblong holes Nm	g
												short-term	long-term			
23500-05	26,7	8	6	5	3,3	14	7	4	34	5	30°	700	350	400	0,6	1,64
23500-06	34,5	9	7	6	4,5	18	10	5,5	43	6	29°	1100	550	400	1,3	2,88
23500-08	35,5	12	9	8	4,5	20	10	6	47	7	25°	1300	650	800	1,3	4,48
23500-10	48,5	14	10,5	10	5,5	26	14	7,5	62	8	25°	1500	750	1100	2,5	8,47
23500-12	49,5	16	12	12	5,5	28	14	8,5	65	9	25°	2200	1100	1150	2,5	11,66
23500-14	64,4	19	13,5	14	6,6	34	18	9,5	82	11	23°	2400	1200	1200	4,5	18,41
23500-16	65,4	21	15	16	6,6	36	18	10,5	86	12	23°	3000	1500	1800	4,5	24,06
23500-18	72	23	16,5	18	9	42	22	11,5	93	13	23°	3500	1750	1900	10,5	32,23
23500-20	73	25	18	20	9	44	22	13	98	14	23°	4700	2350	2500	10,5	40,99
23500-22	81	28	20	22	9	48	24	14	108	16	22°	6100	3050	2700	10,5	53,83
23500-25	94	31	22	25	9	54	27	16	124	17	22°	6600	3300	3200	10,5	76,39
23500-30	105	37	25	30	11	64	32	17	139	20	22°	8100	4050	3750	21,5	114,46

Plastic slide bearing



Material:
High-performance polymer iglidur® G, iglidur® J or iglidur® X.

Surface finish:
iglidur® G matte grey;
iglidur® J yellow;
iglidur® X black

Sample order:
nlm 23710-11030403

Note:
Plastic slide bearings made of high-performance polymer.

– maintenance-free
– lubricant-free
– corrosion-resistant
– resistant to dirt
– high dimensional precision
– high pressure resistance
– good heat dissipation
– very low creep tendencies
– high mechanical damping
– resistant to UV radiation.

Installation:
The bearings are designed for force fitting in H7 tolerated receptacles. After fitting them in a receptacle with nominal size, the inner diameter of the bearings adjusts itself according to tolerance D.

The bearings are suitable for shafts with h tolerance (at least h9 recommended).

Form A
cylindrical

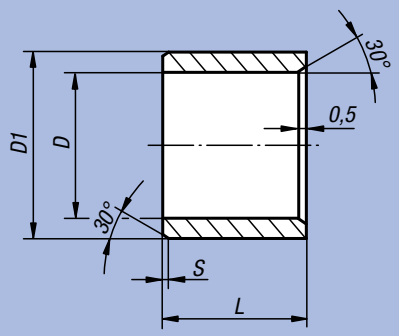

Form B
with collar

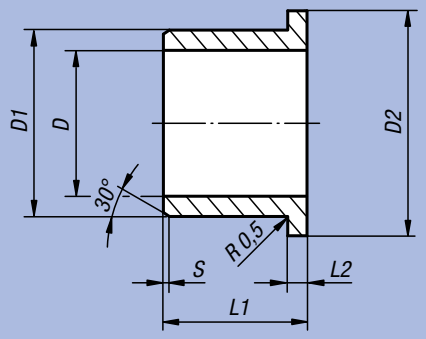

Material	Note	longest endurance times in dry run	for high loads	for high temperatures	low friction/ high speed	dirt-resistant	chemical-resistant	low water absorption	good for edge pressing	possible under water	cost-effective	electrically conducting
iglidur® G	the all-rounder	●	●			●					●	
iglidur® J	low coefficients of friction	●			●			●	●		●	
iglidur® X	temperature and chemical resistant	●	●	●			●	●		●		●

Plastic slide bearing

Plastic slide bearing iglidur® G

Order No. Form A	Order No. Form B	D	D1	D2	L	L1	L2	S	Tolerance D after force fitting	Max. permissible static surface pressure N/mm²	Temperature range
23710-11030403	23710-12030405	3	4,5	7,5	3	5	0,75	0,3	E10	80	-40 °C up to +130 °C
23710-11050705	23710-12050705	5	7	11	5	5	1	0,3	E10	80	-40 °C up to +130 °C
23710-11060806	23710-12060808	6	8	12	6	8	1	0,5	E10	80	-40 °C up to +130 °C
23710-11081008	23710-12081007	8	10	15	8	7,5	1	0,5	E10	80	-40 °C up to +130 °C
23710-11101210	23710-12101209	10	12	18	10	9	1	0,5	E10	80	-40 °C up to +130 °C
23710-11121410	23710-12121412	12	14	20	10	12	1	0,8	E10	80	-40 °C up to +130 °C
23710-11141615	23710-12141612	14	16	22	15	12	1	0,8	E10	80	-40 °C up to +130 °C
23710-11151720	23710-12151712	15	17	23	20	12	1	0,8	E10	80	-40 °C up to +130 °C
23710-11161820	23710-12161817	16	18	24	20	17	1	0,8	E10	80	-40 °C up to +130 °C
23710-11202320	23710-12202321	20	23	30	20	21	1,5	0,8	E10	80	-40 °C up to +130 °C
23710-11252820	23710-12252821	25	28	35	20	21	1,5	0,8	E10	80	-40 °C up to +130 °C
23710-11303430	23710-12303426	30	34	42	30	26	2	0,8	E10	80	-40 °C up to +130 °C

Plastic slide bearing iglidur® J

Order No. Form A	Order No. Form B	D	D1	D2	L	L1	L2	S	Tolerance D after force fitting	Max. permissible static surface pressure N/mm²	Temperature range
23710-21030403	23710-22030405	3	4,5	7,5	3	5	0,75	0,3	E10	35	-50 °C up to +90 °C
23710-21050705	23710-22050705	5	7	11	5	5	1	0,3	E10	35	-50 °C up to +90 °C
23710-21060806	23710-22060808	6	8	12	6	8	1	0,5	E10	35	-50 °C up to +90 °C
23710-21081008	23710-22081007	8	10	15	8	7,5	1	0,5	E10	35	-50 °C up to +90 °C
23710-21101210	23710-22101209	10	12	18	10	9	1	0,5	E10	35	-50 °C up to +90 °C
23710-21121410	23710-22121412	12	14	20	10	12	1	0,8	E10	35	-50 °C up to +90 °C
23710-21141615	23710-22141612	14	16	22	15	12	1	0,8	E10	35	-50 °C up to +90 °C
23710-21151720	23710-22151712	15	17	23	20	12	1	0,8	E10	35	-50 °C up to +90 °C
23710-21161820	23710-22161817	16	18	24	20	17	1	0,8	E10	35	-50 °C up to +90 °C
23710-21202320	23710-22202321	20	23	30	20	21	1,5	0,8	E10	35	-50 °C up to +90 °C
23710-21252820	23710-22252821	25	28	35	20	21	1,5	0,8	E10	35	-50 °C up to +90 °C
23710-21303430	23710-22303426	30	34	42	30	26	2	0,8	E10	35	-50 °C up to +90 °C

Plastic slide bearing iglidur® X

Order No. Form A	Order No. Form B	D	D1	D2	L	L1	L2	S	Tolerance D after force fitting	Max. permissible static surface pressure N/mm²	Temperature range
23710-31030403	23710-32030405	3	4,5	7,5	3	5	0,75	0,3	F10	150	-100 °C up to +250 °C
23710-31050705	23710-32050705	5	7	11	5	5	1	0,3	F10	150	-100 °C up to +250 °C
23710-31060806	23710-32060808	6	8	12	6	8	1	0,5	F10	150	-100 °C up to +250 °C
23710-31081008	23710-32081007	8	10	15	8	7,5	1	0,5	F10	150	-100 °C up to +250 °C
23710-31101210	23710-32101209	10	12	18	10	9	1	0,5	F10	150	-100 °C up to +250 °C
23710-31121410	23710-32121412	12	14	20	10	12	1	0,8	F10	150	-100 °C up to +250 °C
23710-31141615	23710-32141612	14	16	22	15	12	1	0,8	F10	150	-100 °C up to +250 °C
23710-31151720	23710-32151712	15	17	23	20	12	1	0,8	F10	150	-100 °C up to +250 °C
23710-31161820	23710-32161817	16	18	24	20	17	1	0,8	F10	150	-100 °C up to +250 °C
23710-31202320	23710-32202321	20	23	30	20	21	1,5	0,8	F10	150	-100 °C up to +250 °C
23710-31252820	23710-32252821	25	28	35	20	21	1,5	0,8	F10	150	-100 °C up to +250 °C
23710-31303430	23710-32303426	30	34	42	30	26	2	0,8	F10	150	-100 °C up to +250 °C

Thrust washers



Material:
High-performance polymer iglidur® G.

Surface finish:
matte grey.

Sample order:
nlm 23715-1050906

Note:
Maintenance-free and lubricant-free thrust washers. They serve to receive axial loads in a rotational motion. The axial loads that occur can be both alternating and permanent. Electrically insulating. Resistant to UV radiation.

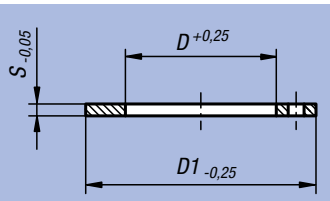

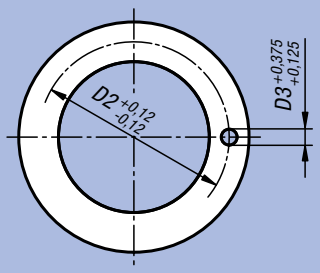

assembly dimensions

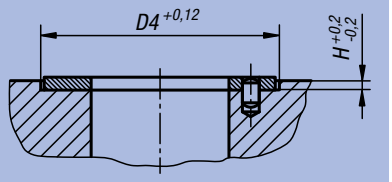

Order No.	D	D1	D2	D3	D4	H	S	Max. permissible static surface pressure N/mm²	Temperature range
23715-1050906	5	9,5	-	-	9,5	0,3	0,6	80	-40 °C up to +130 °C
23715-1061515	6	15	-	-	15	1	1,5	80	-40 °C up to +130 °C
23715-1081810	8	18	-	-	18	0,7	1	80	-40 °C up to +130 °C
23715-1101810	10	18	-	-	18	0,7	1	80	-40 °C up to +130 °C
23715-1122415	12	24	18	1,5	24	1	1,5	80	-40 °C up to +130 °C
23715-1142015	14	20	-	-	20	1	1,5	80	-40 °C up to +130 °C
23715-1152415	15	24	19,5	1,5	24	1	1,5	80	-40 °C up to +130 °C
23715-1163015	16	30	22	2	30	1	1,5	80	-40 °C up to +130 °C
23715-1183215	18	32	25	2	32	1	1,5	80	-40 °C up to +130 °C
23715-1203615	20	36	28	3	36	1	1,5	80	-40 °C up to +130 °C
23715-1223815	22	38	30	3	38	1	1,5	80	-40 °C up to +130 °C
23715-1244215	24	42	33	3	42	1	1,5	80	-40 °C up to +130 °C
23715-1264415	26	44	35	3	44	1	1,5	80	-40 °C up to +130 °C
23715-1284815	28	48	38	4	48	1	1,5	80	-40 °C up to +130 °C

24000

ACME Threaded Spindles
Ball-type Linear Drives
Bearing units



ACME threaded spindles, rolled

right-hand thread, single-flight



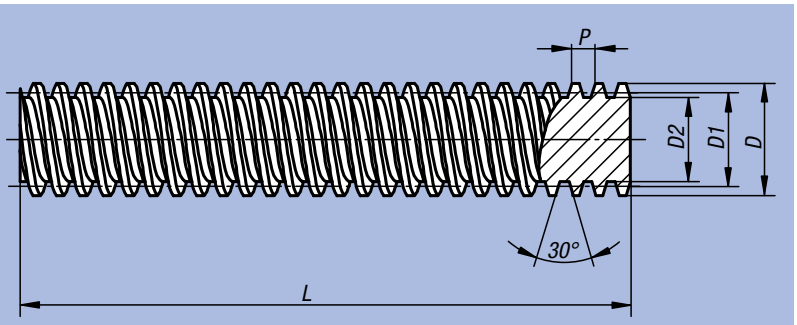

Material:
Hardened steel 1.0401 (C15)

Surface finish:
Rolled, natural finish

Sample order:
nlm 24000-100311X1000

Note:
The ACME threaded spindle is a movement spindle that has a relatively large friction. It is self locking in the standard thread range. This has the advantage that it generally need not be secured in the rest position.

Tolerance class 7e
Pitch precision 0.3 / 300 mm

On request:
Lengths up to a max. 3000 mm.

Order No.	DxP	D1 min.	D1 max.	D2	L	kg/m
24000-100311X1000	Tr 10x3	8,191	8,415	5,84	1000	0,430
24000-120311X1000	Tr 12x3	10,191	10,415	7,84	1000	0,660
24000-160411X1000	Tr 16x4	13,640	13,905	10,80	1000	1,180
24000-200411X1000	Tr 20x4	17,640	17,905	14,80	1000	1,960
24000-240511X1000	Tr 24x5	21,094	21,394	17,50	1000	2,800
24000-260511X1000	Tr 26x5	23,094	23,394	19,50	1000	3,340
24000-300611X1000	Tr 30x6	26,547	26,882	21,90	1000	4,440

ACME threaded nuts, round

right-hand thread, single-flight



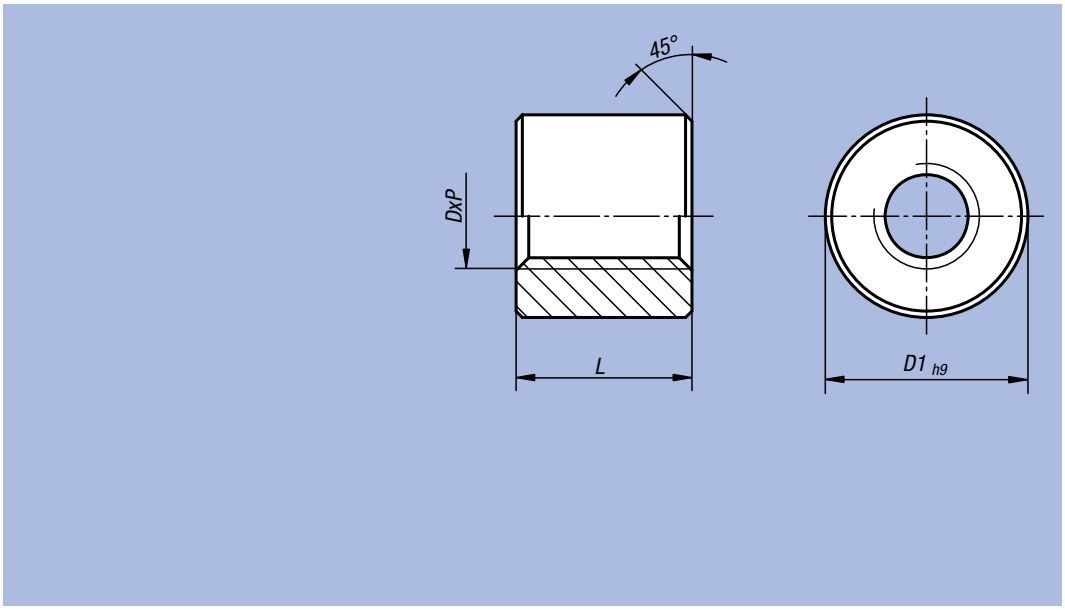

Material:
Red brass Rg7

Surface finish:
Natural finish

Sample order:
nlm 24003-1003132

Note:
For motion drives with low and medium speed. In case of lack of lubricant, the ACME threaded nuts made of red brass have good emergency running characteristics on steel spindles.

Tolerance class 7H.

Order No.	DxP	D1	L	kg
24003-1003132	Tr 10x3	22	20	0,061
24003-1203132	Tr 12x3	26	24	0,095
24003-1604132	Tr 16x4	36	32	0,270
24003-2004132	Tr 20x4	45	40	0,523
24003-2405132	Tr 24x5	50	48	0,627
24003-2605132	Tr 26x5	60	52	0,700
24003-3006132	Tr 30x6	60	60	1,017

ACME threaded nuts with flange

right-hand thread, single-flight



Material:
Red brass Rg7

Surface finish:
Natural finish

Sample order:
nlm 24005-160413

Note:
For motion drives with low and medium speed. In case of lack of lubricant, the ACME threaded nuts made of red brass have good emergency running characteristics on steel spindles.

Tolerance class 7H.

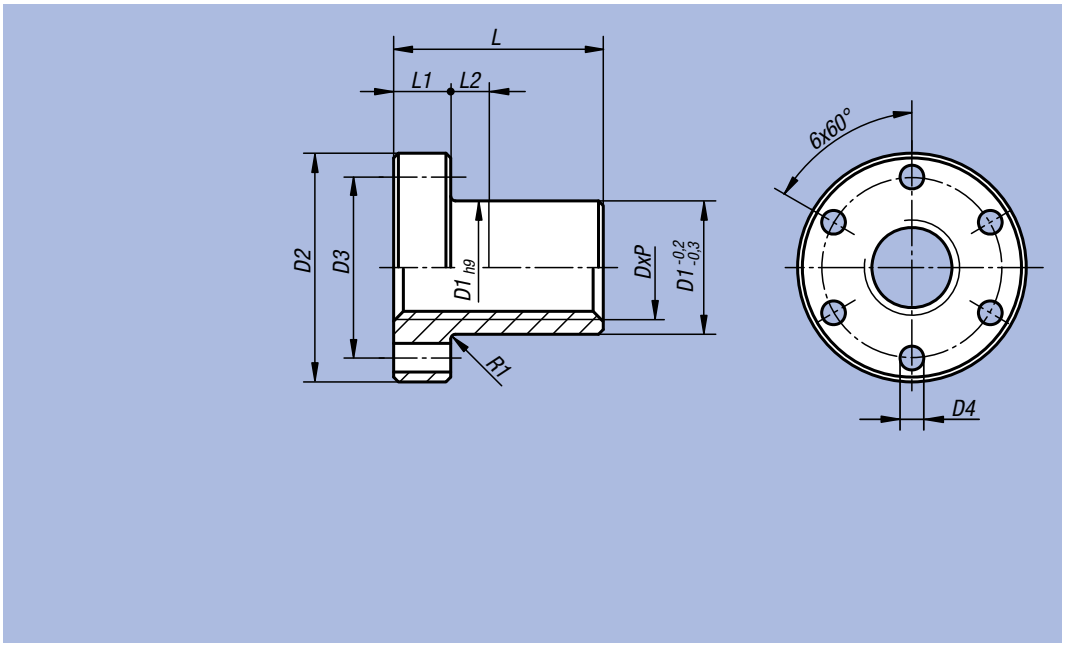

Order No.	DxP	D1	D2	D3	D4	L	L1	L2	kg
24005-100313	Tr 10x3	25	42	34	5	15	10	5	0,100
24005-120313	Tr 12x3	28	48	38	6	18	12	6	0,110
24005-160413	Tr 16x4	28	48	38	6	24	12	12	0,130
24005-200413	Tr 20x4	32	55	45	7	30	12	8	0,200
24005-240513	Tr 24x5	32	55	45	7	36	12	8	0,420
24005-260513	Tr 26x5	38	62	50	7	39	14	8	0,800
24005-300613	Tr 30x6	38	62	50	7	45	14	8	0,950

Technical Information for Ball-type Linear Drives

Efficiency and self-limitation:
The mechanical efficiency attained via low rolling friction in the case of a ball screw: up to 95%.
Operating time can be up to 100%.
Due to low rolling friction, ball screws have no self-limitation.
Therefore, a break gear must be provided when self-limitation is required in their application (reduction gear or engine brake).
This is particularly necessary in the case of installation positions.

Operating temperature:
Ball screws can be used at normal load within the temperature range of -20 °C up to +80 °C. They can also be used at +110 °C for short periods of time. They always require proper lubrication.

Lubrication:
Proper lubrication is important for ball screws in order to attain the calculated lifespan, to avoid excessive heating and guarantee a smooth, noiseless run. The same lubricants are used for them upon operation as are used for roller bearings.
Ball screws should be stringently protected from impurities. This should occur by default via the dirt scrapers integrated in the ball screw nuts, which prevents lubricant from escaping from the nut.

Installation information:
When ordering ball screw nuts individually, they come delivered on a mounting sleeve. The sleeve must not be removed prior to installation, or else the balls could fall out of the ball screw nut. Upon installation (Figure 1), hold the sleeve as an extension piece on the end of the spindle and then slide the nut over the sleeve and at the same time casually loosen onto the spindle thread. Next, lubricant should be applied at the lubricant drill hole in the ball screw nut.
In order to avoid damaging the ball screws, the machine must be supplied with a limit switch and an end-of-travel damper.

Note:
Ball screws consist of a ball screw spindle, a ball screw nut, in which the balls are integrated, as well as the ball refeed. They serve to convert a rotary motion into a lengthwise motion and the reverse. They excel at so doing owing to high accuracy at a high operating ratio.

Manufacturing technology:
The rolled ball screws are produced by means of a precision rolling process. Spindle and nut have a Gothic section. The load angle is 45°. The nut tracks are ground in as in the case of precision screws. Smooth antifrictional qualities and a long lifespan are thus guaranteed.

Gradient deviations:

Thread Lengths		Accuracy Class			
over	under	C 3 (µm)	C 5 (µm)	C 7 (µm)	C 10 (µm)
0	315	8	18	±50 / 300 mm	±210 / 300 mm
315	500	10	20		
500	630	12	23		
630	800	13	25		
800	1000	15	27		
1000	1250	16	30		
1250	1600	18	35		
1600	2000	21	40		
2000	2500	24	46		
2500	3150	29	54		
3150	4000	35	65		
4000	5000	41	77		

Axial play and pretensioning:
Here a differentiation is made between a play-restricted (axial play > 0) and a play-free or pretensioned (axial play < 0) ball screw. In the case of pretensioned nuts, a considerably less elastic deformation occurs than in that of nuts without pretensioning. Pretensioned nuts are, therefore, to be recommended when positioning accuracy under load matters.

Spindle diameter	Axial play P0 (mm)	Play-free P1 (mm))	Light pretensioning P2 Single nut breakaway torque N
16x5	0,08	0	1 - 3
20x5			1 - 3
25x5			2 - 5
32x5			2 - 5
32x10			3 - 6

Assessment of the lifespan:
The lifespan can be calculated from the ratio of dynamic load rating and average load.

$$L = \left(\frac{C_{dyn}}{F_m}\right)^3 \cdot 10^6$$

L = lifespan in rotations
C_{dyn} = dynamic load rating (N)
F_m = average load (N)

Figure 1

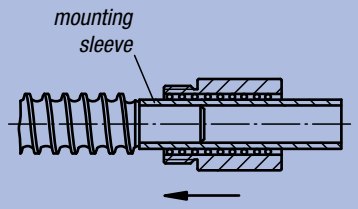

Ball-type Linear Drives, rolled

with flange nut DIN 69051 Part 5



Material:
Spindle, steel 1.1213;
nut, steel 1.3505;
deflector, plastic

Surface finish:
Spindle, rolled, inductively hardened to 62 ±2 HRC and polished;
nut, ground, track inductively hardened to 62 ±2 HRC and polished

Sample order:
nlm 24055-16052X600
(Please indicate total length L)
For processing the ends, a detailed customer design is required.

Note:
Ball-type linear drive with gothic pointed arch profile with 5 mm or 10 mm pitch. Single-start, ascending to the right. Ball screw-flange nut according to DIN 69051 Part 5 with flange.
Manufactured according to accuracy class C7 (tolerance ±50 µ / 300 mm). Without pre-stressing, with axial play P0 (max. 0.08 mm).

Caution:
The flange nut must not be removed without assembly aid of the spindle, otherwise the balls fall out.

On request:
We manufacture ball screws at your request on the basis of a detailed design. Max. production lengths 5600 mm.

Other accuracy classes and pre-stressings available (see Technical Information).

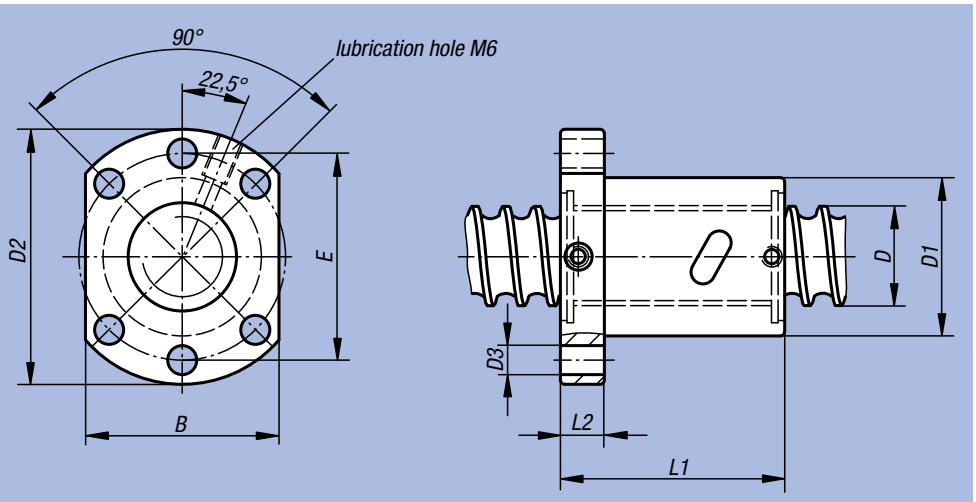

Example of shaft machining:

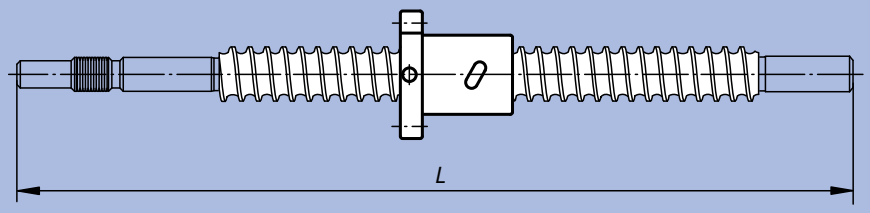

Order No.	D	Pitch	D1	D2	D3	B	E	L1	L2	Ball-Ø	Number of bearing rotation paths	Dynamic base loads N	Static base loads N	Stiffness K (N/µm)
24055-16052X	16	5	28	48	5,5	40	38	50	10	3,175	4	8880	15250	200
24055-20052X	20	5	36	58	6,6	44	47	51	10	3,175	4	9990	19950	250
24055-25052X	25	5	40	62	6,6	48	51	51	10	3,175	4	11190	25810	350
24055-32052X	32	5	50	80	9	62	65	52	12	3,175	4	12640	34030	400
24055-32102X	32	10	50	80	9	62	65	90	12	6,35	4	30930	61020	400

Ball-type Linear Drives, rolled

with screw-in cylinder nut



Material:
Spindle, steel 1.1213;
nut, steel 1.3505;
deflector, plastic

Surface finish:
Spindle, rolled, inductively hardened to 62 ±2 HRC and polished;
nut, ground, track inductively hardened to 62 ±2 HRC and polished

Sample order:
nlm 24060-16052X600
(Please indicate total length L)
For processing the ends, a detailed customer design is required.

Note:
Ball-type linear drive with gothic pointed arch profile with 5 mm or 10 mm pitch. Single-start, ascending to the right. Ball screw-cylinder nut with screw-in thread according to ISO 3408 (DIN 69051).
Manufactured according to accuracy class C7 (tolerance ±50 µ / 300 mm).
Without pre-stressing, with axial play P0 (max. 0.08 mm).

Caution:
The screw-in cylinder nut must not be removed without assembly aid of the spindle, otherwise the balls fall out.

On request:
We manufacture ball screws at your request on the basis of a detailed design.
Max. production lengths 5600 mm.

Other accuracy classes and pre-stressings available (see Technical Information).

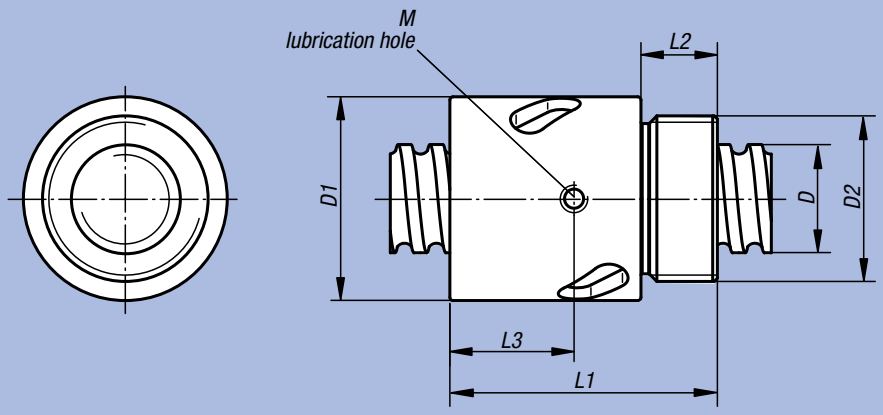

Example of shaft machining:

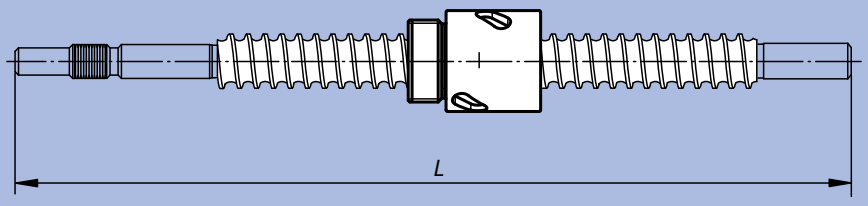

Order No.	D	Pitch	D1	D2	L1	L2	L3	M	Ball-Ø	Number of bearing rotation paths	Dynamic base loads N	Static base loads N	Stiffness K (N/µm)
24060-16052X	16	5	32,5	M26x1,5	42	12	-	-	3,175	4	8880	15250	200
24060-20052X	20	5	38	M35x1,5	45	15	-	-	3,175	4	9990	19950	250
24060-25052X	25	5	43	M40x1,5	69	19	32	M6	3,175	4	11190	25810	350

Housings

for flange nuts



Material:
Steel

Surface finish:
Black oxide finish

Sample order:
nlm 24070-016

Note:
The housings are ideally suited for installation of flange nuts according to DIN 69051 Part 5. The shaft height of the spindle bearings is aligned with the solid bearing units 24072 and loose bearing units 24074. The housings may be screwed on from above and below and pinned with two taper pins or cylindrical pins.

Delivery with 6 pieces, fastening screws of strength class 8.8.

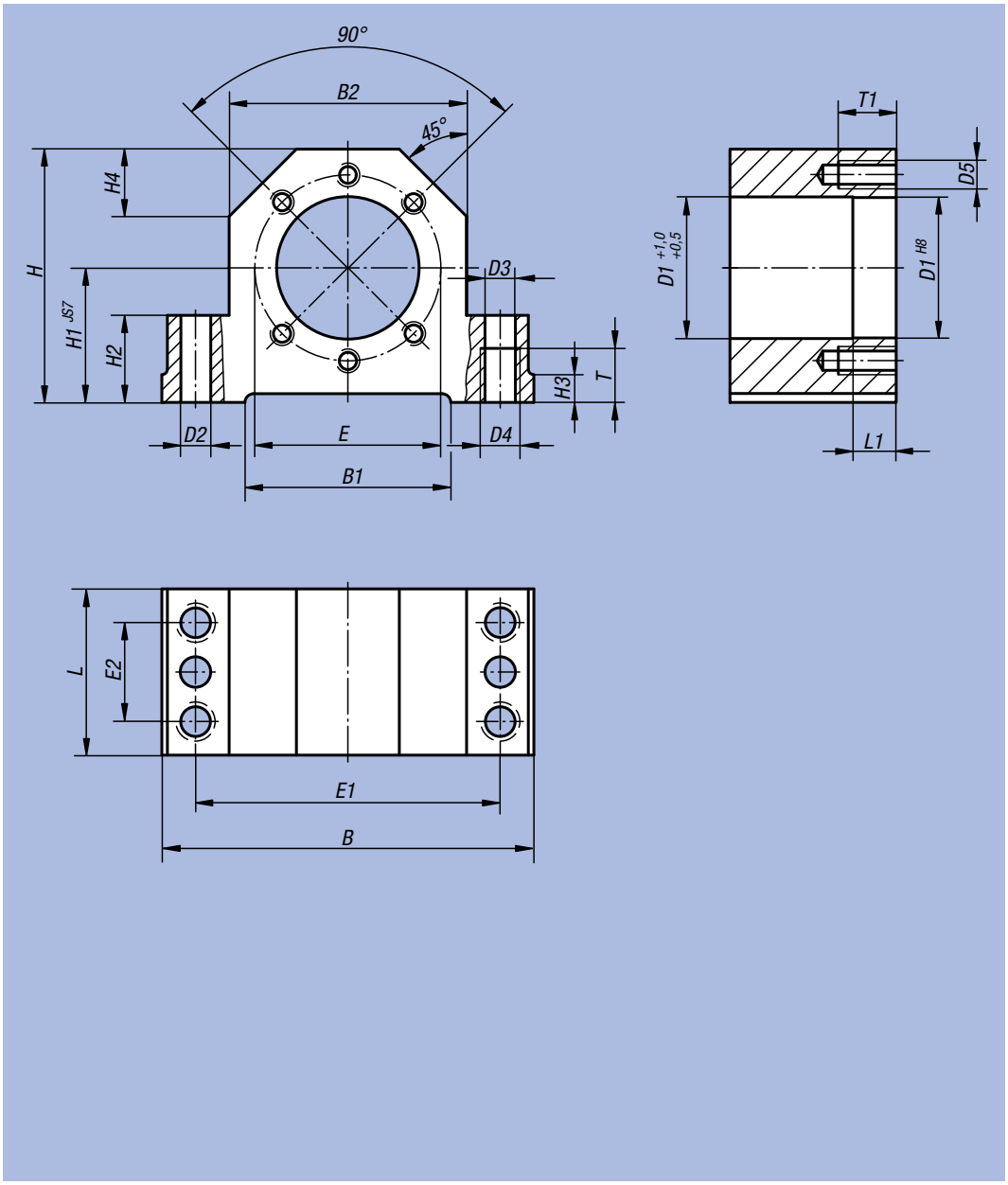

Ball-type linear drive with flange nut installed in a housing



Order No.	Suitable for spindle Ø	B	B1	B2	D1	D2	D3	D4	D5	E	E1	E2	H	H1	H2	H3	H4	L	L1	T	T1	kg
24070-016	16	86	50	52	28	7,7	8,4	M10	M5	38	68	23	58	32	22	7	15	42	10	15	12	0,800
24070-020	20	94	58	60	36	7,7	8,4	M10	M6	47	77	25	64	34	22	7	17	46	16	15	15	1,000
24070-025	25	108	63	66	40	9,7	10,5	M12	M6	51	88	29	72	39	27	10	19	46	16	18	15	1,400
24070-032	32	112	70	72	50	9,7	10,5	M12	M8	65	92	29	82	42	27	10	19	49	16	18	20	1,500

Solid Bearing Units



Material:
Housing, steel

Surface finish:
Housing, black oxide finish

Sample order:
nlm 24072-010

Note:
The shaft height of the spindle bearings is aligned with the loose bearing units 24074 and the housings for flange nuts 24070. The housings may be screwed on from above or below and pinned with two taper pins or cylindrical pins. Double-sided stop angles facilitate the adjustment of the unit.

Fully ready-to-install solid bearing units with two-rowed pre-stressed high-accuracy bearings and a 60° pressure angle. They assimilate both radial and axial forces from both directions and, as a result of pre-stressing, provide highest rigidity, run-out, precise tool positioning and repeatability.

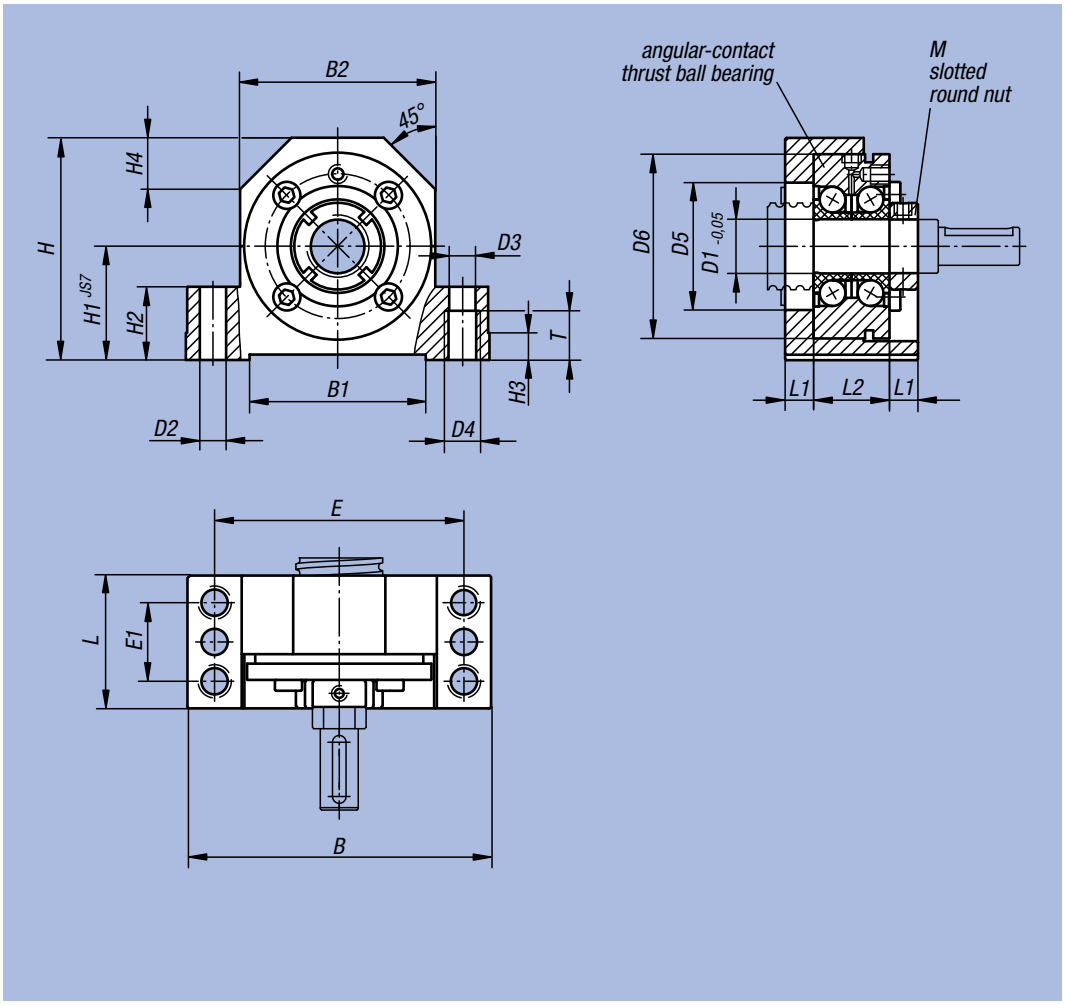

Order No.	Suitable for spindle Ø	B	B1	B2	D1	D2	D3	D4	D5	D6	E	E1	H	H1	H2	H3	H4	L	L1	L2	M	T
24072-010	16	86	50	52	10	7,7	8,4	M10	32	50	68	23	58	32	22	7	15	37	8,5	20	M10x1	15
24072-012	20	94	58	60	12	7,7	8,4	M10	32	55	77	25	64	34	22	7	17	42	8,5	25	M12x1	15
24072-015	20	108	63	66	15	9,7	10,5	M12	32	60	88	29	72	39	27	10	19	46	10,5	25	M15x1	18
24072-017	25	108	63	66	17	9,7	10,5	M12	36	62	88	29	72	39	27	10	19	46	10,5	25	M17x1	18
24072-020	32	112	70	72	20	9,7	10,5	M12	43	68	92	29	78	42	27	10	20	49	10,5	28	M20x1	18

Order No.	Dynamic base loads N	Static base loads N	Stiffness K (N/µm)	⍰ kg
24072-010	13400	18800	325	0,700
24072-012	16900	24700	375	0,970
24072-015	17900	28000	400	1,370
24072-017	18800	31000	450	1,330
24072-020	26000	47000	650	1,590

Loose Bearing Units



Material:
Housing, steel

Surface finish:
Housing, black oxide finish

Sample order:
nlm 24074-010

Note:
The shaft height of the spindle bearings is aligned with the solid bearing units 24072 and the housings for flange nuts 24070. The housings may be screwed on from above or below. Double-sided stop angles facilitate the adjustment of the unit.

Fully ready-to-install loose bearing units with grooved ball bearing.

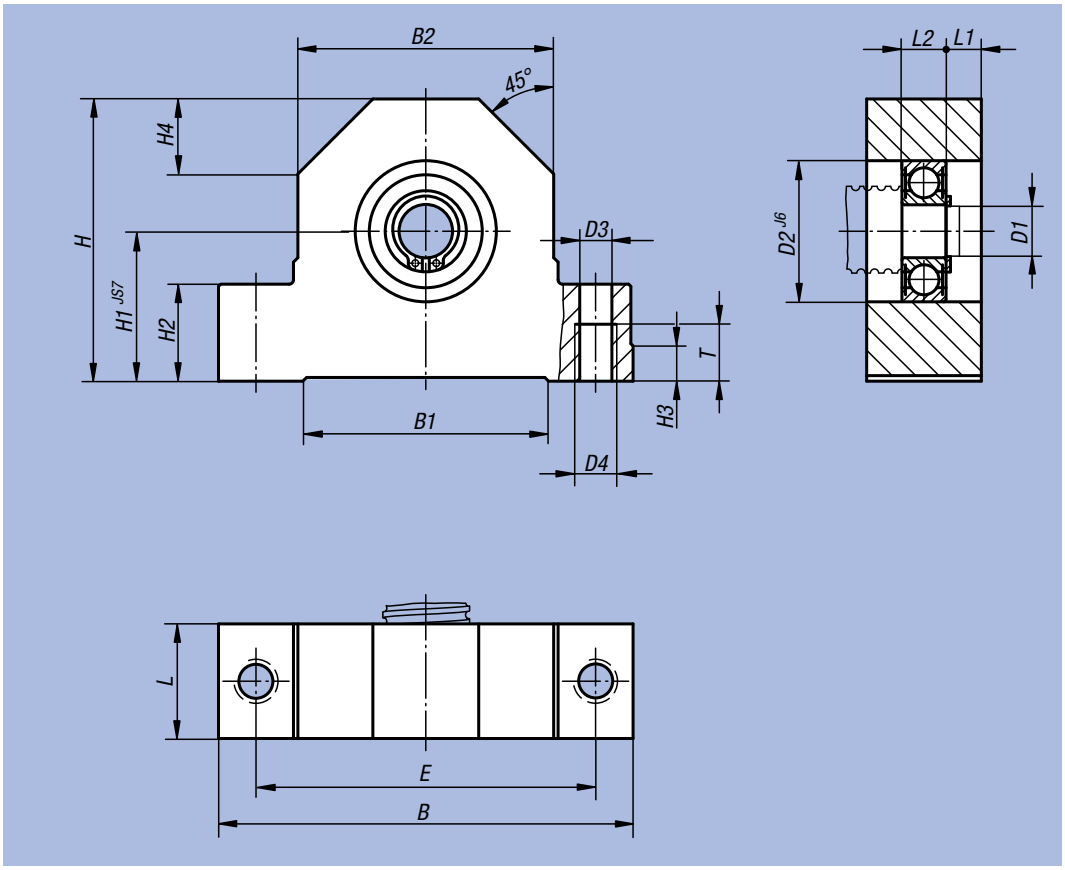

Order No.	Suitable for spindle Ø	B	B1	B2	D1	D2	D3	D4	E	H	H1	H2	H3	H4	L	L1	L2	T	kg
24074-010	16	86	50	52	10	30	8,4	M10	68	58	32	22	7	15	24	7,5	9	15	0,520
24074-012	20	94	58	60	12	32	8,4	M10	77	64	34	22	7	17	26	8	10	15	0,690
24074-015	20	108	63	66	15	35	10,5	M12	88	72	39	27	10	19	28	8	12	18	0,970
24074-017	25	108	63	66	17	35	10,5	M12	88	72	39	27	10	19	28	8	12	18	0,960
24074-020	32	112	70	72	20	47	10,5	M12	92	78	42	27	10	20	34	10	14	18	1,230

Solid Bearing Units

in block design



Material:
Housing, steel

Surface finish:
Housing, black oxide finish

Sample order:
nlm 24076-010

Note:
The shaft height of the spindle bearings is aligned with the loose bearing unit 24078. The solid bearing units are composed of a housing with 2 angular contact thrust ball bearings with seals. Pre-stressed by a prefixed flange. With circlips and a lock nut.

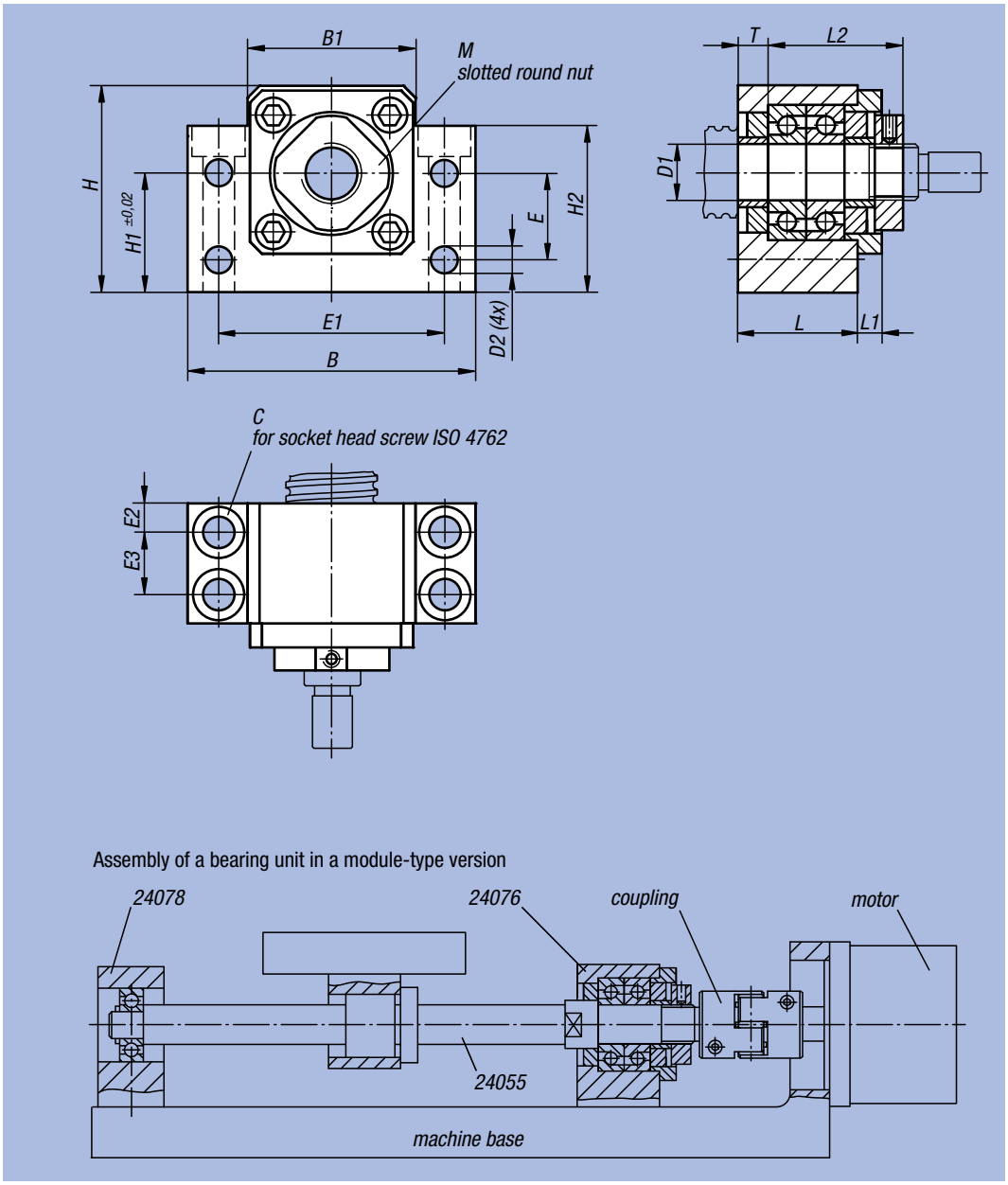

Order No.	Size	B	B1	C	D1	D2	E	E1	E2	E3	H	H1	H2	L	L1	L2	M	T
24076-010	10	60	34	M6	10	5,5	15	46	6	13	39	22	32,5	25	5	29	M10x1	5
24076-012	12	60	35	M6	12	5,5	18	46	6	13	43	25	32,5	25	5	29	M12x1	5
24076-015	15	70	40	M6	15	5,5	18	54	6	15	48	28	38	27	9	32	M15x1	6
24076-017	17	86	50	M8	17	6,6	28	68	8	19	64	39	55	35	8	44	M17x1	7
24076-020	20	88	52	M8	20	6,6	22	70	8	19	60	34	50	35	8	43	M20x1	8

Order No.	Dynamic base loads N	Static base loads N	Stiffness K (N/µm)	kg
24076-010	6080	450	65	0,360
24076-012	6660	550	88	0,390
24076-015	7600	630	100	0,560
24076-017	13700	1390	125	1,020
24076-020	12700	1160	140	1,050

Loose Bearing Units

in block design



Material:
Housing, steel

Surface finish:
Housing, black oxide finish

Sample order:
nlm 24078-010

Note:
The shaft height of the spindle bearings is aligned with the solid bearing unit 24076. The loose bearing units consist of a housing with grooved ball bearing which adapts axially to the length dimensions of the spindle.

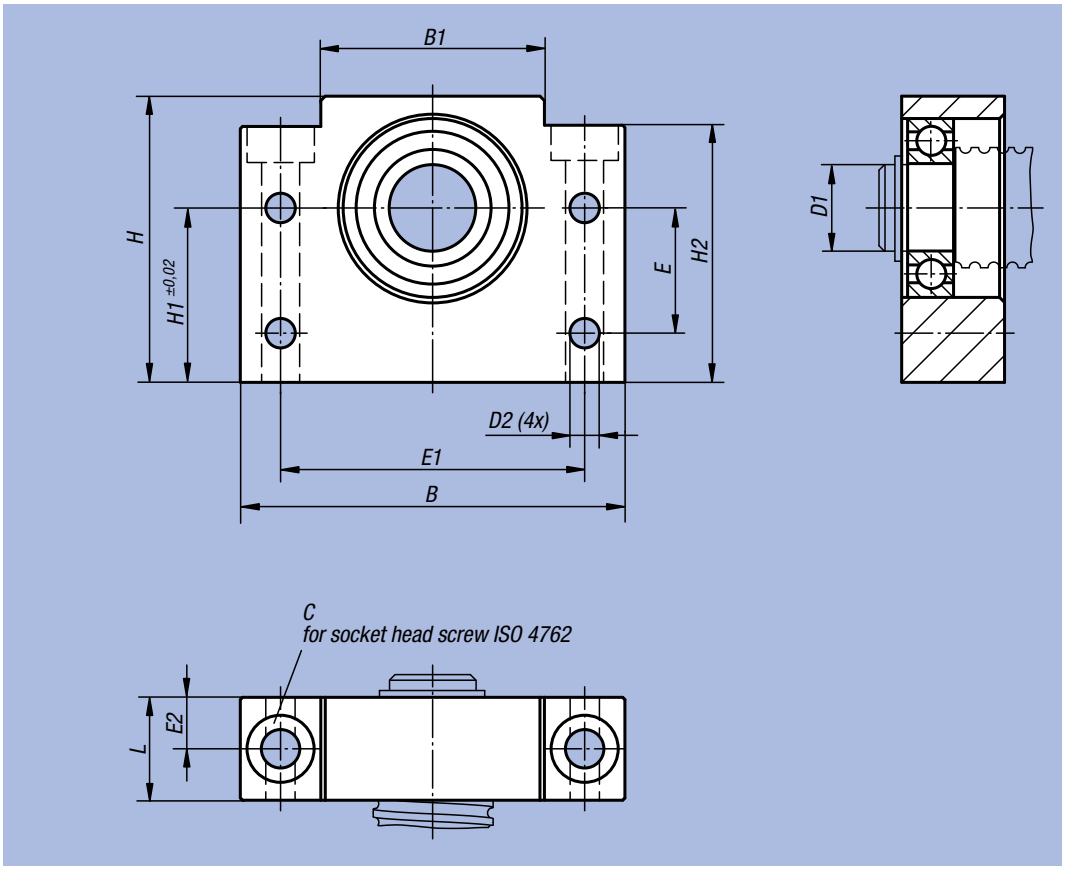

Order No.	Size	B	B1	C	D1	D2	E	E1	E2	H	H1	H2	L	kg
24078-010	10	60	34	M6	8	5,5	15	46	10	39	22	32,5	20	0,250
24078-012	12	60	34	M6	10	5,5	18	46	10	43	25	32,5	20	0,270
24078-015	15	70	40	M6	15	5,5	18	54	10	48	28	38	20	0,350
24078-017	17	86	50	M8	17	6,6	28	68	11,5	64	39	55	23	0,680
24078-020	20	88	52	M8	20	6,6	22	70	13	60	34	50	26	0,700

Solid Bearing Units

in flange design



Material:
Housing, steel

Surface finish:
Housing, black oxide finish

Sample order:
nlm 24080-010

Note:
The solid bearing unit is aligned with the loose bearing unit 24082. The solid bearing units are composed of a housing with 2 angular contact thrust ball bearings and seals. Pre-stressed with a prefixed flange. With circlips and a lock nut.

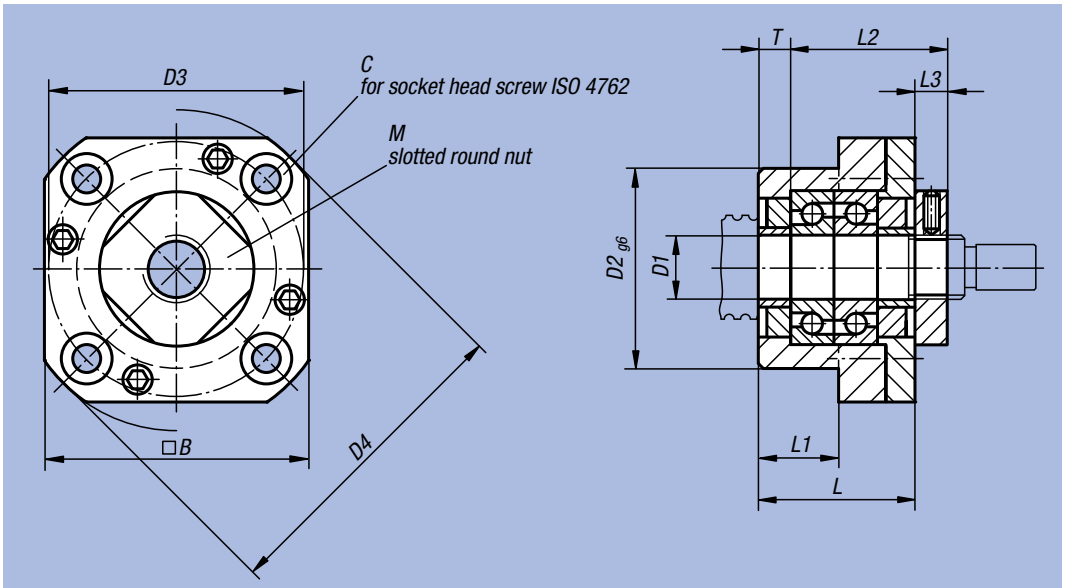

Bearing units attached externally

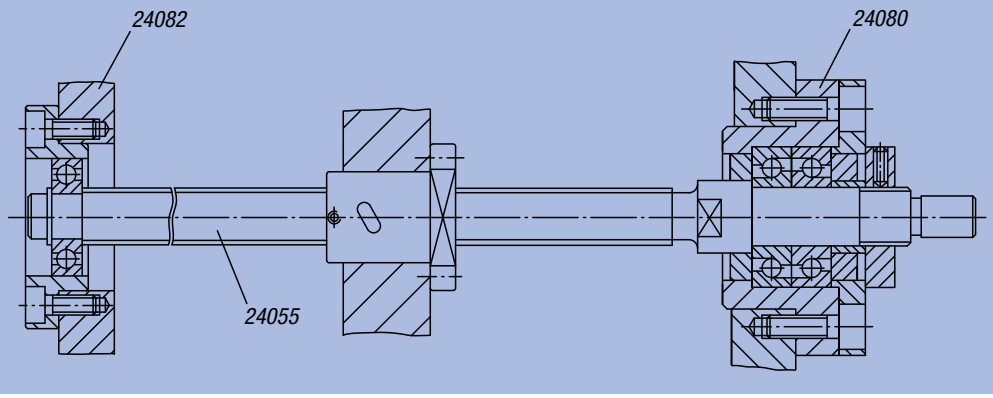

Order No.	Size	B	C	D1	D2	D3	D4	L	L1	L2	L3	M	T
24080-010	10	42	M4	10	34	42	52	27	17	29,5	7,5	M10x1	5
24080-012	12	44	M4	12	36	44	54	27	17	29,5	7,5	M12x1	5
24080-015	15	52	M5	15	40	50	63	32	17	36	8	M15x1	6
24080-020	20	68	M6	20	57	70	85	52	30	50	10	M20x1	10

Order No.	Dynamic base loads N	Static base loads N	Stiffness K (N/µm)	□ kg
24080-010	6080	450	65	0,210
24080-012	6660	550	88	0,230
24080-015	7600	630	100	0,360
24080-020	17900	1890	140	1,000

Loose Bearing Units

in flange design



Material:
Housing, steel

Surface finish:
Housing, black oxide finish

Sample order:
nlm 24082-010

Note:
The loose bearing unit is aligned with the solid bearing unit 24080. The loose bearing units consist of a housing with grooved ball bearing which adapts axially to the length dimensions of the spindle.

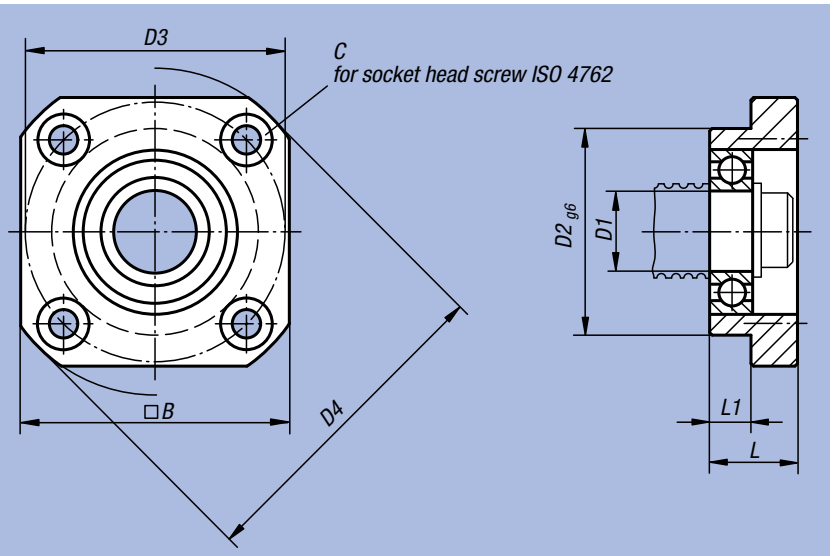

Floating bearing attached externally, fixed bearing attached internally

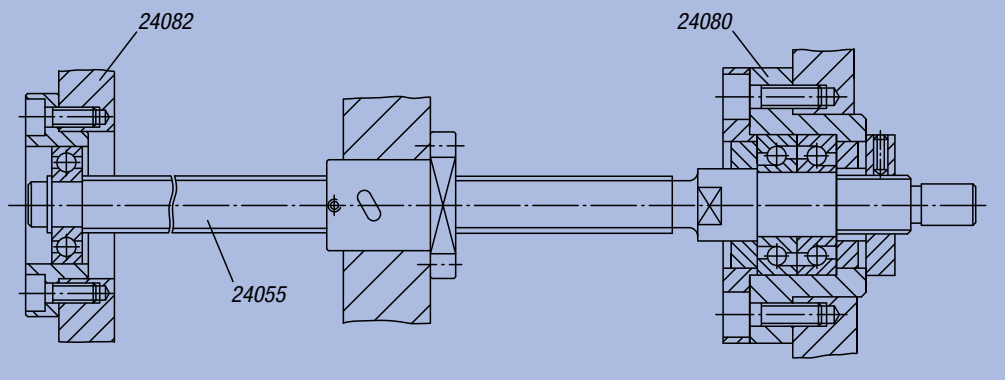

Order No.	Size	B	C	D1	D2	D3	D4	L	L1	kg
24082-010	10	35	M3	8	28	35	43	12	5	0,060
24082-012	12	42	M4	10	34	42	52	15	8	0,120
24082-015	15	52	M5	15	40	50	63	17	8	0,150
24082-020	20	68	M6	20	57	70	85	20	9	0,380

Notes:

Miniature Ball-type Linear Drives, ground

with flange nut



Material:
Spindle, steel 1.1213;
nut, steel 1.3505

Surface finish:
Spindle and nut ground, inductively hardened to 62 ±2 HRC and polished

Sample order:
nlm 24100-0810050

Note:
Miniature ball screw drives with finish-machined shaft ends and flange nut. Delivered greased. Re-lubrication is recommended.

Produced according to precision class C5. Without initial tension, with axial play (max. 0.008 mm).

Precision spindles for use in optics, the food industry, automation, medical technology, the defence industry, aviation and precision industrial technology.

Caution:
The flange nut must not be removed from the spindle, otherwise the balls fall out.

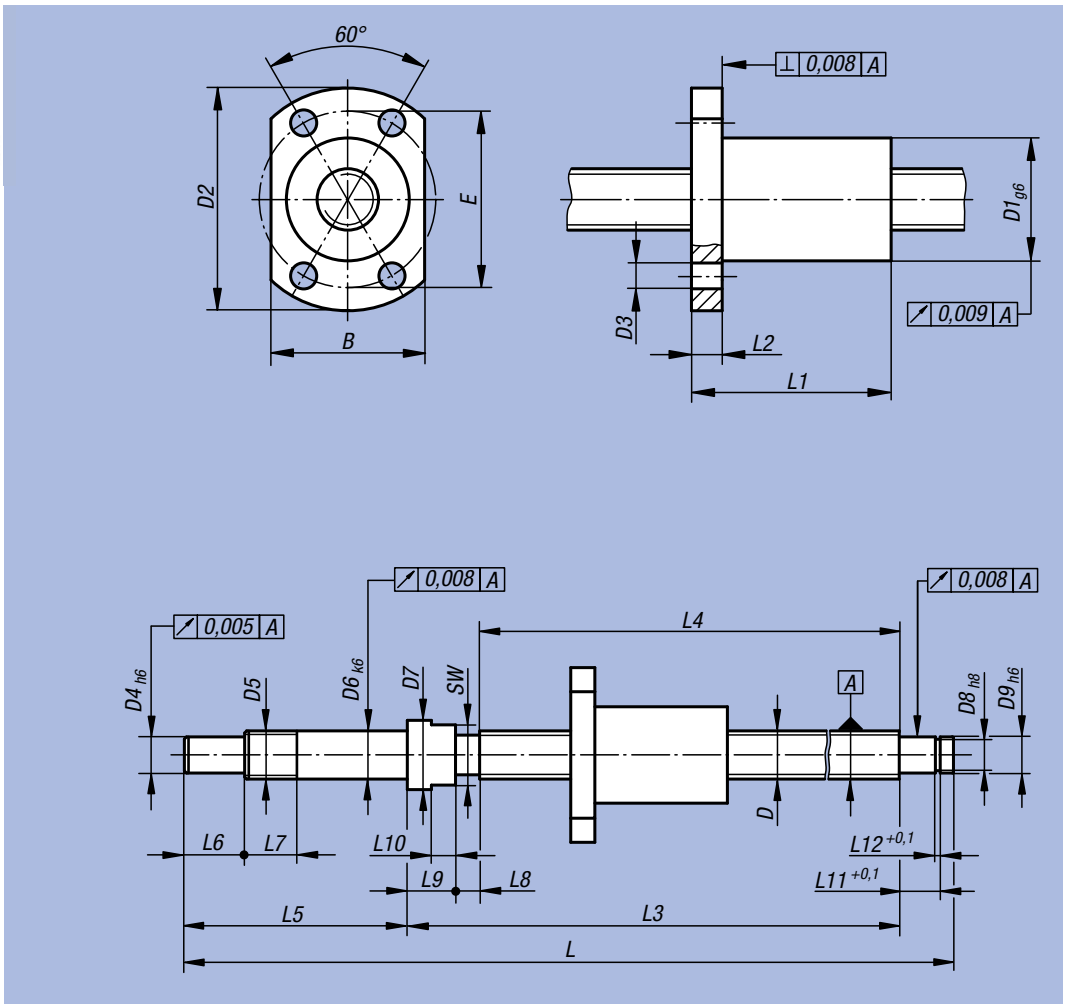

Miniature Ball-type Linear Drives, ground

with flange nut

Order No.	D	Pitch	Stroke	B	D1	D2	D3	D4	D5	D6	D7	D8	D9	E	L	L1	L2	L3	L4	L5	L6	L7	L8	L9	L10	L11	L12
24100-0810050	8	1	50	18	14	27	3,4	6	M8x1	8	11,5	5,7	6	21	148	16	4	102	90	37	10	9	4	8	4	6,8	0,8
24100-0810100	8	1	100	18	14	27	3,4	6	M8x1	8	11,5	5,7	6	21	198	16	4	152	140	37	10	9	4	8	4	6,8	0,8
24100-0810150	8	1	150	18	14	27	3,4	6	M8x1	8	11,5	5,7	6	21	248	16	4	202	190	37	10	9	4	8	4	6,8	0,8
24100-0820050	8	2	50	20	16	29	3,4	6	M8x1	8	11,5	5,7	6	23	148	26	4	102	90	37	10	9	4	8	4	6,8	0,8
24100-0820100	8	2	100	20	16	29	3,4	6	M8x1	8	11,5	5,7	6	23	198	26	4	152	140	37	10	9	4	8	4	6,8	0,8
24100-0820150	8	2	150	20	16	29	3,4	6	M8x1	8	11,5	5,7	6	23	248	26	4	202	190	37	10	9	4	8	4	6,8	0,8
24100-1020050	10	2	50	22	18	35	4,5	6	M8x1	8	11,5	5,7	6	27	158	28	5	112	100	37	10	9	4	8	4	6,8	0,8
24100-1020100	10	2	100	22	18	35	4,5	6	M8x1	8	11,5	5,7	6	27	208	28	5	162	150	37	10	9	4	8	4	6,8	0,8
24100-1020150	10	2	150	22	18	35	4,5	6	M8x1	8	11,5	5,7	6	27	258	28	5	212	200	37	10	9	4	8	4	6,8	0,8
24100-1020200	10	2	200	22	18	35	4,5	6	M8x1	8	11,5	5,7	6	27	308	28	5	262	250	37	10	9	4	8	4	6,8	0,8
24100-1220050	12	2	50	24	20	37	4,5	8	M10x1	10	14	7,6	8	29	180	28	5	125	110	45	15	10	5	10	5	7,9	0,9
24100-1220100	12	2	100	24	20	37	4,5	8	M10x1	10	14	7,6	8	29	230	28	5	175	160	45	15	10	5	10	5	7,9	0,9
24100-1220150	12	2	150	24	20	37	4,5	8	M10x1	10	14	7,6	8	29	280	28	5	225	210	45	15	10	5	10	5	7,9	0,9
24100-1220200	12	2	200	24	20	37	4,5	8	M10x1	10	14	7,6	8	29	330	28	5	275	260	45	15	10	5	10	5	7,9	0,9
24100-1220250	12	2	250	24	20	37	4,5	8	M10x1	10	14	7,6	8	29	380	28	5	325	310	45	15	10	5	10	5	7,9	0,9

Order No.	SW	Number of bearing rotation paths	Pitch angle	Ball-Ø	Dynamic base loads N	Static base loads N	Revolutions per minute max.
24100-0810050	10	1 x 3	2° 13′	0,8	700	1300	3200
24100-0810100	10	1 x 3	2° 13′	0,8	700	1300	3200
24100-0810150	10	1 x 3	2° 13′	0,8	700	1300	3200
24100-0820050	10	1 x 3	4° 23′	1,6	1350	2250	4200
24100-0820100	10	1 x 3	4° 23′	1,6	1350	2250	4200
24100-0820150	10	1 x 3	4° 23′	1,6	1350	2250	4200
24100-1020050	10	1 x 3	2° 32′	1,6	1500	2900	4000
24100-1020100	10	1 x 3	2° 32′	1,6	1500	2900	4000
24100-1020150	10	1 x 3	2° 32′	1,6	1500	2900	4000
24100-1020200	10	1 x 3	2° 32′	1,6	1500	2900	4000
24100-1220050	12	1 x 3	2° 58′	1,6	1700	3700	3400
24100-1220100	12	1 x 3	2° 58′	1,6	1700	3700	3400
24100-1220150	12	1 x 3	2° 58′	1,6	1700	3700	3400
24100-1220200	12	1 x 3	2° 58′	1,6	1700	3700	3400
24100-1220250	12	1 x 3	2° 58′	1,6	1700	3700	3400

Miniature Ball-type Linear Drives, ground

with screw-in cylinder nut



Material:
Spindle, steel 1.1213;
nut, steel 1.3505

Surface finish:
Spindle and nut ground, inductively hardened to 62 ± 2 HRC and polished

Sample order:
nlm 24105-0810050

Note:
Miniature ball screw drives with finish-machined shaft ends and screw-on barrel nut. Delivered greased. Re-lubrication is recommended.

Produced according to precision class C5. Without initial tension, with axial play (max. 0.008 mm).

Precision spindles for use in optics, the food industry, automation, medical technology, the defence industry, aviation and precision industrial technology.

Caution:
The screw-in cylinder nut must not be removed from the spindle, otherwise the balls fall out.

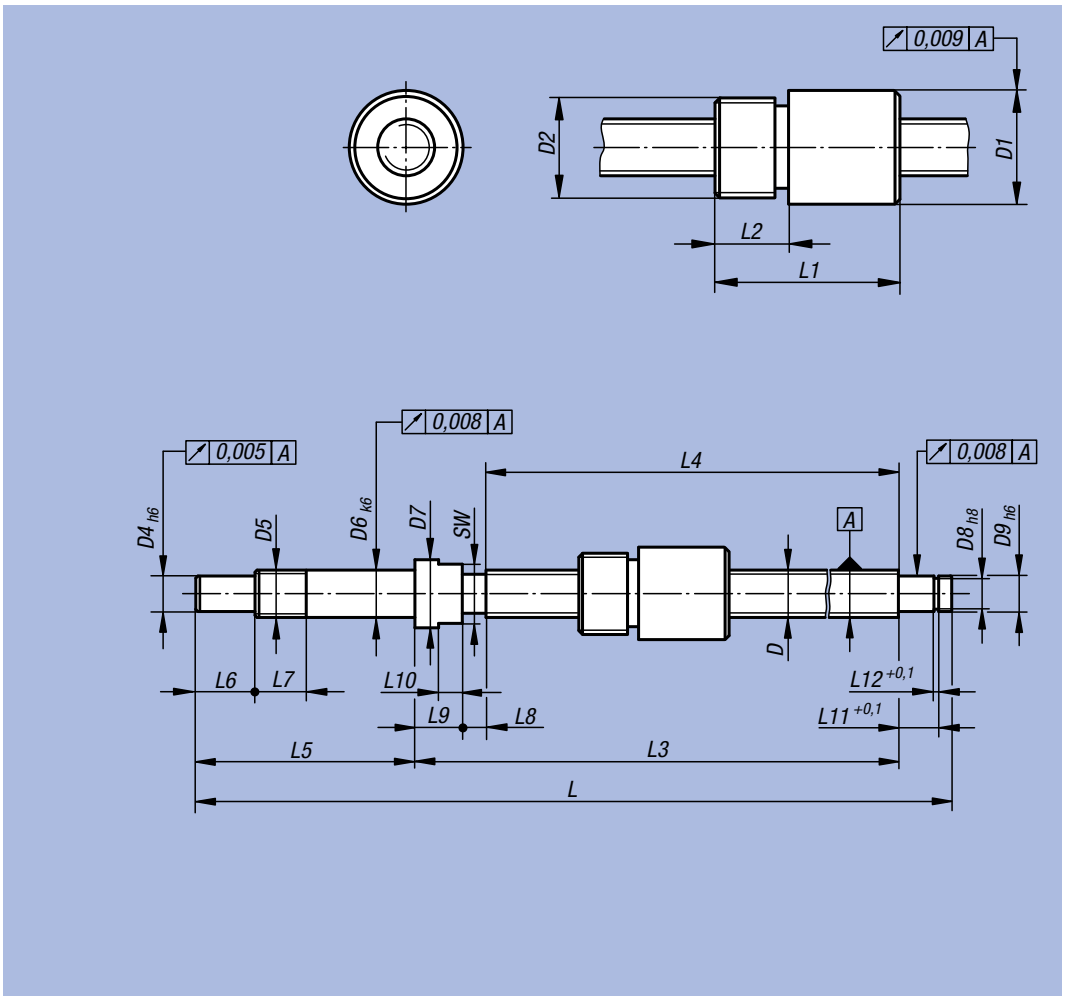

Miniature Ball-type Linear Drives, ground

with screw-in cylinder nut

Order No.	D	Pitch	Stroke	D1	D2	D4	D5	D6	D7	D8	D9	L	L1	L2	L3	L4	L5	L6	L7	L8	L9	L10	L11	L12
24105-0810050	8	1	50	16	M14x1	6	M8x1	8	11,5	5,7	6	148	22	8	102	90	37	10	9	4	8	4	6,8	0,8
24105-0810100	8	1	100	16	M14x1	6	M8x1	8	11,5	5,7	6	198	22	8	152	140	37	10	9	4	8	4	6,8	0,8
24105-0810150	8	1	150	16	M14x1	6	M8x1	8	11,5	5,7	6	248	22	8	202	190	37	10	9	4	8	4	6,8	0,8
24105-0820050	8	2	50	16	M14x1	6	M8x1	8	11,5	5,7	6	148	27	8	102	90	37	10	9	4	8	4	6,8	0,8
24105-0820100	8	2	100	16	M14x1	6	M8x1	8	11,5	5,7	6	198	27	8	152	140	37	10	9	4	8	4	6,8	0,8
24105-0820150	8	2	150	16	M14x1	6	M8x1	8	11,5	5,7	6	248	27	8	202	190	37	10	9	4	8	4	6,8	0,8
24105-1020050	10	2	50	18	M16x1	6	M8x1	8	11,5	5,7	6	158	28,5	7	112	100	37	10	9	4	8	4	6,8	0,8
24105-1020100	10	2	100	18	M16x1	6	M8x1	8	11,5	5,7	6	208	28,5	7	162	150	37	10	9	4	8	4	6,8	0,8
24105-1020150	10	2	150	18	M16x1	6	M8x1	8	11,5	5,7	6	258	28,5	7	212	200	37	10	9	4	8	4	6,8	0,8
24105-1020200	10	2	200	18	M16x1	6	M8x1	8	11,5	5,7	6	308	28,5	7	262	250	37	10	9	4	8	4	6,8	0,8
24105-1220050	12	2	50	20,5	M18x1	8	M10x1	10	14	7,6	8	180	29	10	125	110	45	15	10	5	10	5	7,9	0,9
24105-1220100	12	2	100	20,5	M18x1	8	M10x1	10	14	7,6	8	230	29	10	175	160	45	15	10	5	10	5	7,9	0,9
24105-1220150	12	2	150	20,5	M18x1	8	M10x1	10	14	7,6	8	280	29	10	225	210	45	15	10	5	10	5	7,9	0,9
24105-1220200	12	2	200	20,5	M18x1	8	M10x1	10	14	7,6	8	330	29	10	275	260	45	15	10	5	10	5	7,9	0,9
24105-1220250	12	2	250	20,5	M18x1	8	M10x1	10	14	7,6	8	380	29	10	325	310	45	15	10	5	10	5	7,9	0,9

Order No.	SW	Number of bearing rotation paths	Pitch angle	Ball-Ø	Dynamic base loads N	Static base loads N	Revolutions per minute max.
24105-0810050	10	1 x 3	2° 13′	0,8	700	1300	3200
24105-0810100	10	1 x 3	2° 13′	0,8	700	1300	3200
24105-0810150	10	1 x 3	2° 13′	0,8	700	1300	3200
24105-0820050	10	1 x 3	4° 23′	1,6	1350	2250	4200
24105-0820100	10	1 x 3	4° 23′	1,6	1350	2250	4200
24105-0820150	10	1 x 3	4° 23′	1,6	1350	2250	4200
24105-1020050	10	1 x 3	2° 32′	1,6	1500	2900	4000
24105-1020100	10	1 x 3	2° 32′	1,6	1500	2900	4000
24105-1020150	10	1 x 3	2° 32′	1,6	1500	2900	4000
24105-1020200	10	1 x 3	2° 32′	1,6	1500	2900	4000
24105-1220050	12	1 x 3	2° 58′	1,6	1700	3700	3400
24105-1220100	12	1 x 3	2° 58′	1,6	1700	3700	3400
24105-1220150	12	1 x 3	2° 58′	1,6	1700	3700	3400
24105-1220200	12	1 x 3	2° 58′	1,6	1700	3700	3400
24105-1220250	12	1 x 3	2° 58′	1,6	1700	3700	3400

Notes:

26000

Rubber-metal Buffer
Shock Absorbers



Technical information for rubber-metal buffers

Note:
Our rubber-metal buffers are simple and cost-efficient standard units for elastic bearings. They are ideally suited for compressive and axial loads of the most diverse ranges of application.
In the case of shear stress, however, they substantially less resilient than in that of compressive stress. The adjacent tables provide an overview of the **guide values** for static load. In the case of high dynamic alternating loads or that of high frequencies, the load indices are to be reduced proportionately.

Guide values for static load (excerpt from 26100, 26102, 26104 and 26106)

Type	D	H	Compressive loads						Shear stresses					
			Spring rate c_2 in N/mm			Permissible load F in N			Spring rate cx, y in N/mm			Permissible load F in N		
			hard	medium	soft	hard	medium	soft	hard	medium	soft	hard	medium	soft
A	20	15	300	190	120	500	320	200	60	40	30	190	120	70
A	30	15	670	410	250	1100	700	400	90	60	40	350	210	130
A	30	30	240	150	100	900	570	340	50	30	20	430	280	170
A	40	30	480	300	170	1800	1110	670	90	60	30	770	500	250
A	50	20	2400	1500	900	5000	3190	1870	240	160	100	1200	770	460
A	50	40	600	380	220	2800	1750	1050	120	80	50	1280	800	460
A	75	25	5000	2900	1700	12800	8000	4700	410	260	160	2800	1750	1030
A	75	55	650	400	240	4700	3000	1750	130	80	50	2100	1300	800
B	25	20	320	160	120	490	320	190	70	45	25	230	160	90
B	30	20	660	430	260	830	520	310	100	75	50	330	210	130
B	30	30	350	220	130	750	450	280	70	50	30	350	220	130
B	40	30	550	350	210	1250	750	450	110	70	40	520	330	200
B	50	40	560	370	220	2100	1270	760	120	80	45	930	580	350
B	50	50	350	220	130	1750	1100	650	80	50	30	800	510	310
B	75	50	950	630	330	4700	2910	1720	180	120	80	1900	1200	710
C	20	25	200	130	80	300	190	120	50	30	20	150	90	60
C	30	30	590	380	220	720	450	270	90	60	50	260	170	110
C	40	30	900	570	340	1080	680	410	150	90	60	380	240	140
C	50	30	1700	1090	650	2500	1750	950	210	150	70	470	290	170
C	50	50	360	220	140	1390	870	520	80	40	30	610	390	230
C	75	50	1010	630	370	3650	2050	1200	200	130	80	1560	980	580

Type	D	H	Compressive loads	
			Spring rate c_2 in N/mm	Permissible load F in N
			medium	medium
D	25	20	150	260
D	30	20	330	730
D	40	30	250	950
D	50	20	660	1750
D	75	25	1430	4650

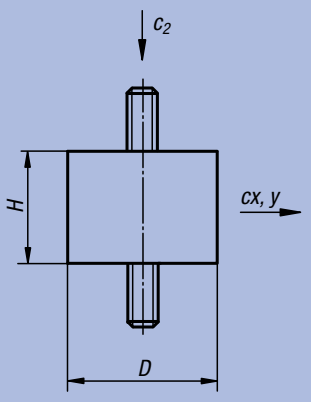

Rubber hardenings:
hard = 70° Shore medium = 55° Shore soft = 45° Shore

For general alignment apply approx. 55° Shore **in the case of natural rubber.**
static compression load: F (max.) = approx. 6.5 kg/cm² (63.77 N/cm²)
static axial load: F (max.) = approx. 1.5 kg/cm² (14.72 N/cm²)

at approx. 10 % spring deflection, or transverse travel in the case of axial load.

Higher loads without destruction of the item are of course also clearly possible; however, these affect considerably the rubber-metal buffer in its primary purpose. Tensile loads are possible but should be avoided on account of the peak voltages at the contact edges and the notch sensitivity of the rubber.

Synoptical Table - Properties of the Individual Materials

Rubber material		Main Characteristics - Resistance to									
Abbreviation	Polymer	Temperature	Tensile strength	Fracture strain	Aging	Ozone	Petrol	Oil	Acidity	Alkalis	Tensile strain
NR (NK)	Natural rubber	-30 °C – +80 °C	1	1	3	4	6	6	3	3	600%
SBR	Styrene-butadiene rubber	-30 °C – +80 °C	5	2	3	4	4	5	3	3	450%
CR	Chloroprene rubber	-20 °C – +110 °C	3	2	2	2	2	2	2	2	450%
NBR	Acrylonitrile-butadiene rubber	-30 °C – +120 °C	5	2	3	3	1	1	4	3	450%
EPDM	Ethylene propylene terpolymer	-30 °C – +130 °C	5	3	1	1	5	4	1	2	450%
SI	Silicone rubber	-60 °C – +200 °C	6	4	1	1	5	4	5	5	500%

1 = excellent 2 = very good 3 = good 4 = moderate 5 = low 6 = insufficient

Rubber-metal buffer

Type A



Material, surface finish:
Metal parts, galvanized steel, class 5.6;
elastomer, natural rubber,
medium hardness, 55° Shore A

Sample order:
nlm 26100-00800855

Note:
Rubber-metal buffers are widely-used construction devices for elastic bearings. They are used with bearings for aggregates, motors, compressors, pumps and testing machines among other applications.

Temperature resistant from
-30 °C up to +80 °C.

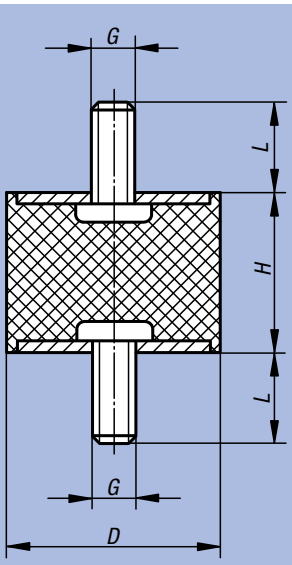

Order No.	D	H	G	L	g
26100-00800855	8	8	M3	6	1,0
26100-01001055	10	10	M4	10	3,2
26100-01001555	10	15	M4	10	3,9
26100-01500855	15	8	M4	10	6,0
26100-01501055	15	10	M4	10	6,4
26100-01501555	15	15	M4	10	7,8
26100-02000855	20	8	M6	18	15,0
26100-02001055	20	10	M6	18	15,0
26100-02001555	20	15	M6	18	20,0
26100-02002055	20	20	M6	18	19,0
26100-02002555	20	25	M6	18	20,0
26100-02501055	25	10	M6	18	20,0
26100-02501555	25	15	M6	18	27,5
26100-02502055	25	20	M6	18	30,0
26100-02502555	25	25	M6	18	32,0
26100-02503055	25	30	M6	18	40,0
26100-03001555	30	15	M8	23	37,0
26100-03002055	30	20	M8	23	56,0
26100-03002555	30	25	M8	23	58,0
26100-03003055	30	30	M8	23	65,0
26100-03004055	30	40	M8	23	74,0
26100-04001555	40	15	M8	23	79,0
26100-04002055	40	20	M8	23	82,0
26100-04003055	40	30	M8	23	102,0
26100-04004055	40	40	M8	23	115,0
26100-05002055	50	20	M10	28	141,0
26100-05002555	50	25	M10	28	155,0
26100-05003055	50	30	M10	28	163,0
26100-05004055	50	40	M10	28	178,0
26100-05005055	50	50	M10	28	199,0
26100-06004055	60	40	M10	28	231,0
26100-07004555	70	45	M10	28	401,0
26100-07502555	75	25	M12	37	369,0
26100-07504055	75	40	M12	37	420,0
26100-07505055	75	50	M12	37	483,0
26100-07505555	75	55	M12	37	514,0

Rubber-metal buffer

Type AT tapered



Material, surface finish:
Metal parts, galvanized steel, class 5.6; elastomer, natural rubber, medium hardness, 57° Shore A

Sample order:
nlm 26101-01001057

Note:
The rubber-metal buffers are widely used construction elements for elastic bearings. They are used as bearings for assemblies, motors, compressors, pumps and testing machines.

Rubber-metal buffers with tapered rubber contour reduce high edge loads of the rubber in case of axial excursion and thus increase the service life of the component.

Temperature-resistant
-30°C up to +80°C.

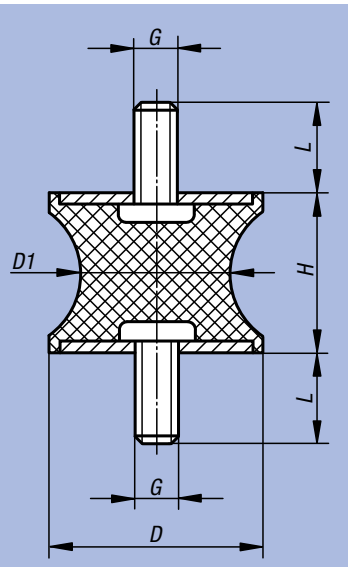

Order No.	D	D1	H	G	L	g
26101-01001057	10	8	10	M4	13	3
26101-01501557	15	12	15	M4	13	7
26101-02001557	20	14	15	M6	18	17
26101-03002057	30	22	20	M8	23	55
26101-04003057	40	33	30	M8	23	81
26101-04004857	40	20	48	M8	23	87
26101-05003057	50	40	30	M10	33	170
26101-07504057	75	50	40	M12	37	350

Rubber-metal buffer

Type B



Material, surface finish:
Metal parts, galvanized steel, class 5.6;
elastomer, natural rubber,
medium hardness, 55° Shore A

Sample order:
nlm 26102-00800855

Note:
Rubber-metal buffers are widely-used construction devices for elastic bearings. They are used with bearings for aggregates, motors, compressors, pumps and testing machines among other applications.

Temperature resistant from
-30 °C up to +80 °C.

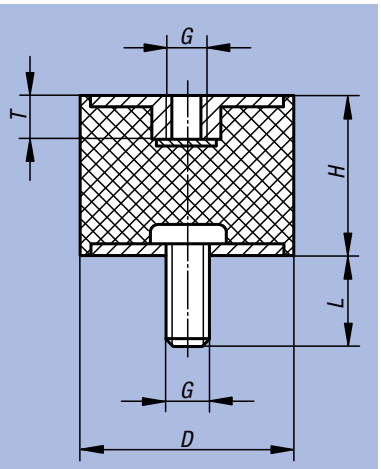

Order No.	D	H	G	L	T	g
26102-00800855	8	8	M3	6	3	1,0
26102-01001055	10	10	M4	10	4	2,7
26102-01001555	10	15	M4	10	4	3,6
26102-01500855	15	10	M4	10	4	7,6
26102-01501555	15	15	M4	10	4	8,3
26102-02001555	20	15	M6	18	5	14,0
26102-02002055	20	20	M6	18	5	16,0
26102-02002555	20	25	M6	18	5	17,0
26102-02501555	25	15	M6	18	5	25,0
26102-02502055	25	20	M6	18	5	28,0
26102-02502555	25	25	M6	18	5	30,0
26102-02503055	25	30	M6	18	5	30,0
26102-03001555	30	15	M8	23	7	38,0
26102-03002055	30	20	M8	23	7	51,0
26102-03002555	30	25	M8	23	7	47,0
26102-03003055	30	30	M8	23	7	48,0
26102-03004055	30	40	M8	23	7	60,0
26102-04002055	40	20	M8	23	7	75,0
26102-04003055	40	30	M8	23	7	91,0
26102-04004055	40	40	M8	23	7	103,0
26102-05002055	50	20	M10	28	8	112,0
26102-05002555	50	25	M10	28	8	125,0
26102-05003055	50	30	M10	28	8	135,0
26102-05004055	50	40	M10	28	8	168,0
26102-05005055	50	50	M10	28	8	183,0
26102-06004055	60	40	M10	28	8	224,0
26102-07004555	70	45	M10	28	8	348,0
26102-07502555	75	25	M12	37	10	299,0
26102-07504055	75	40	M12	37	10	420,0
26102-07505055	75	50	M12	37	10	467,0
26102-07505555	75	55	M12	37	10	469,0

Rubber-metal buffer

Type C



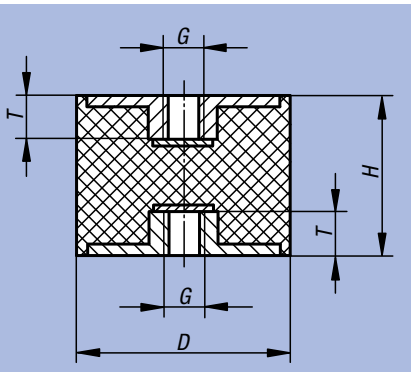

Material, surface finish:
Metal parts, galvanized steel, class 5.6;
elastomer, natural rubber,
medium hardness, 55° Shore A

Sample order:
nlm 26104-01001055

Note:
Rubber-metal buffers are widely-used construction devices for elastic bearings. They are used with bearings for aggregates, motors, compressors, pumps and testing machines among other applications.

Temperature resistant from
-30 °C up to +80 °C.

Order No.	D	H	G	T	≈ g
26104-01001055	10	10	M4	4	2,0
26104-01001555	10	15	M4	4	2,0
26104-01501555	15	15	M4	4	5,0
26104-02002055	20	20	M6	5	14,0
26104-02002555	20	25	M6	5	17,0
26104-02502055	25	20	M6	5	24,0
26104-02502555	25	25	M6	5	27,0
26104-02503055	25	30	M6	5	30,0
26104-03002055	30	20	M8	7	35,0
26104-03003055	30	30	M8	7	44,0
26104-03004055	30	40	M8	7	50,0
26104-04003055	40	30	M8	7	78,0
26104-04004055	40	40	M8	7	93,0
26104-05003055	50	30	M10	8	126,0
26104-05004055	50	40	M10	8	145,0
26104-05005055	50	50	M10	8	169,0
26104-07504055	75	40	M12	10	366,0
26104-07505055	75	50	M12	10	425,0

Rubber-metal buffer

Type CT tapered



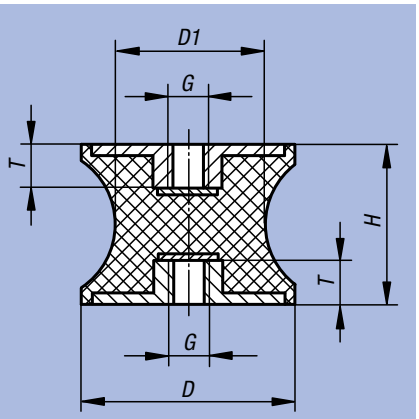

Material, surface finish:
Metal parts, galvanized steel, class 5.6; elastomer, natural rubber, medium hardness, 57° Shore A

Sample order:
nlm 26105-01001057

Note:
The rubber-metal buffers are widely used construction elements for elastic bearings. They are used as bearings for assemblies, motors, compressors, pumps and testing machines.

Rubber-metal buffers with tapered rubber contour reduce high edge loads of the rubber in case of axial excursion and thus increase the service life of the component.

Temperature-resistant
-30°C up to +80°C.

Order No.	D	D1	H	G	T	≈ g
26105-01001057	10	8	10	M4	4	3
26105-01501557	15	12	15	M4	4	6
26105-02001557	20	14	15	M6	6	13
26105-03002057	30	22	20	M8	8	35
26105-04003057	40	33	30	M8	8	74
26105-04004857	40	20	48	M8	8	73
26105-05003057	50	40	30	M10	10	117
26105-07504057	75	50	40	M12	12	298

Rubber-metal buffer

Type D





Material, surface finish:
Metal parts, galvanized steel, class 5.6;
elastomer, natural rubber,
medium hardness, 55° Shore A

Sample order:
nlm 26106-00800855

Note:
The rubber-metal buffers are used, among other things, for the bearing of aggregates and as a shock stop for the limitation of spring travel in the case of moving masses. Also used with machines that are not firmly anchored to a stand and rest on weak floorings, e.g., office machines.

Temperature resistant from
-30 °C up to +80 °C.

Order No.	D	H	G	L	≈ g
26106-00800855	8	8	M3	6	2,0
26106-01001055	10	10	M4	10	2,6
26106-01001555	10	15	M4	10	2,9
26106-01500655	15	6	M4	10	3,4
26106-01500855	15	8	M4	10	3,6
26106-01501055	15	10	M4	10	3,8
26106-01501555	15	15	M4	10	7,3
26106-02000555	20	5	M6	18	7,0
26106-02000855	20	8	M6	18	7,9
26106-02001055	20	10	M6	18	8,5
26106-02001555	20	15	M6	18	10,3
26106-02002055	20	20	M6	18	11,0
26106-02002555	20	25	M6	18	14,0
26106-02500855	25	8	M6	18	14,0
26106-02501055	25	10	M6	18	14,0
26106-02501555	25	15	M6	18	17,2
26106-02502055	25	20	M6	18	20,0
26106-02502555	25	25	M6	18	24,0
26106-02503055	25	30	M6	18	30,0
26106-03001555	30	15	M8	23	29,0
26106-03002055	30	20	M8	23	27,0
26106-03002555	30	25	M8	23	35,0
26106-03003055	30	30	M8	23	35,0
26106-03004055	30	40	M8	23	48,0
26106-04001555	40	15	M8	23	50,0
26106-04002055	40	20	M8	23	52,0
26106-04003055	40	30	M8	23	75,0
26106-04004055	40	40	M8	23	80,0
26106-05002055	50	20	M10	28	85,0
26106-05003055	50	30	M10	28	100,0
26106-05004055	50	40	M10	28	132,0
26106-05005055	50	50	M10	28	152,0
26106-06004055	60	40	M10	28	179,0
26106-07002555	70	25	M10	28	198,0
26106-07004555	70	45	M10	28	292,0
26106-07502555	75	25	M12	37	241,0
26106-07504055	75	40	M12	37	320,0
26106-07505055	75	50	M12	37	357,0
26106-07505555	75	55	M12	37	384,0

Rubber-metal buffer

Type DS suction base



Material, surface finish:
Metal parts, galvanized steel, class 5.6; elastomer, natural rubber, medium hardness, 57° Shore A

Sample order:
nlm 26107-01501457

Note:
The rubber-metal buffers are used, among other things, for the bearing of aggregates and as a shock stop for the limitation of spring travel in the case of moving masses.

Temperature resistant from -30 °C up to +80 °C.

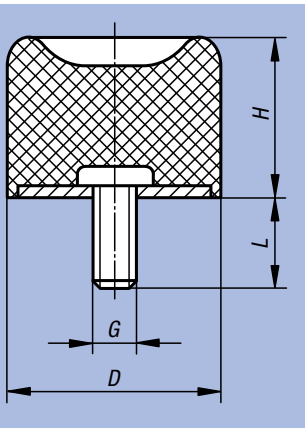

Order No.	D	H	G	L	g
26107-01501457	15	14	M4	13	5
26107-02501857	25	18	M6	18	20
26107-03002857	30	28,5	M8	23	41
26107-04002857	40	28	M8	23	60
26107-05002857	50	28	M10	28	100
26107-07003057	70	30	M10	28	300
26107-07503757	75	37	M12	37	270
26107-10005057	100	50	M16	42	623

Rubber impact Buffers

Type TP door buffer



Material, surface finish:
Elastomer, natural rubber, medium hardness, 60° Shore A

Sample order:
nlm 26108-02601560

Note:
Rubber impact buffers to be screwed on. Also can be used as equipment feet for machines.

Temperature-resistant -30°C up to +80°C.

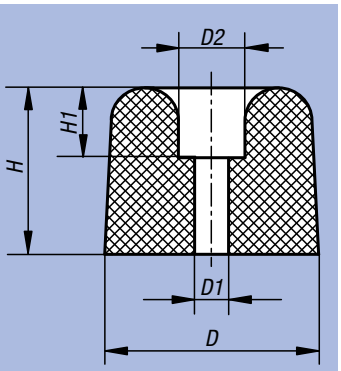

Order No.	D	D1	D2	H	H1	g
26108-02601560	26	4	12	15	9	7
26108-03002260	30	9	11	22	5	17
26108-03503060	35	8	17	30	10	32
26108-04003560	40	7	20	35	8	48

Rubber Impact Buffers

parabolic



Material, surface finish:
Metal parts, galvanized steel, class 5.6;
elastomer, natural rubber,
medium hardness, 55° Shore A

Sample order:
nlm 26110-02002455

Note:
Rubber impact buffers excel owing to their robustness and the effective cushioning and abatement of shocks. Rubber impact buffers are ideally suited for elastic travel limitation and for the cushioning of shocks in the case of mobile and immobile aggregates, machines as well as stops in general.

Temperature resistant up to +80 °C.

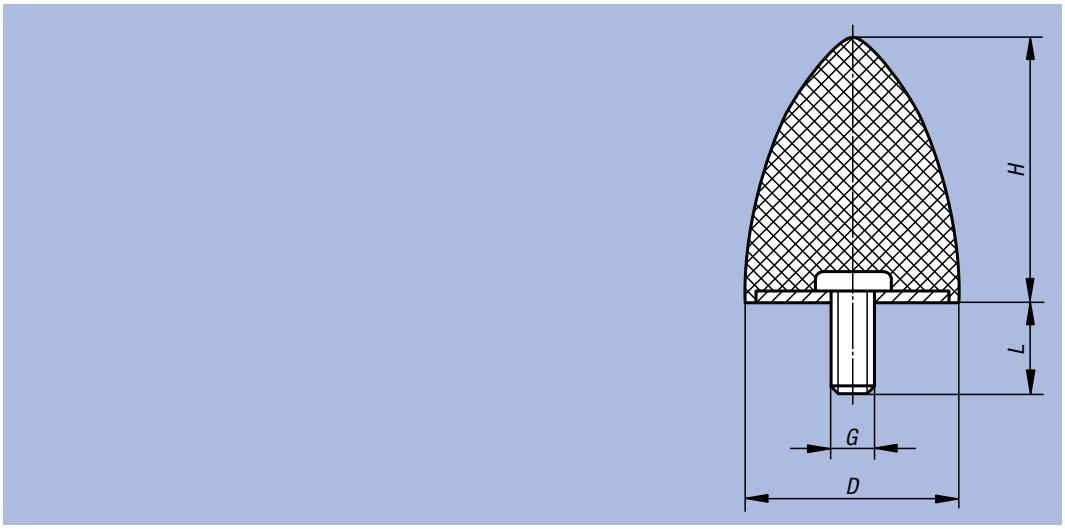

Order No.	D	H	G	L	kg
26110-02002455	20	24	M6	18	0,011
26110-03003655	30	36	M8	20	0,037
26110-03504055	35	40	M8	20	0,045
26110-05005855	50	58	M10	28	0,127
26110-05006755	50	67	M8	38	0,136
26110-07508955	75	89	M12	37	0,341

Notes:

Rubber Impact Buffers

tapered





Material, surface finish:
Metal parts, galvanized steel, class 5.6; elastomer, natural rubber, medium hardness, 55° Shore A

Sample order:
nlm 26112-02501755

Note:
Rubber impact buffers excel owing to their robustness and the effective cushioning and abatement of shocks. Rubber impact buffers are ideally suited for elastic travel limitation and for the cushioning of shocks in the case of mobile and immobile aggregates, machines as well as stops in general.

Temperature resistant
-30 °C up to +80 °C

Order No.	D	H	G	L	kg
26112-02501755	25	17	M6	18	0,015
26112-05001855	50	18	M10	28	0,075

Rubber Impact Buffers

crowned



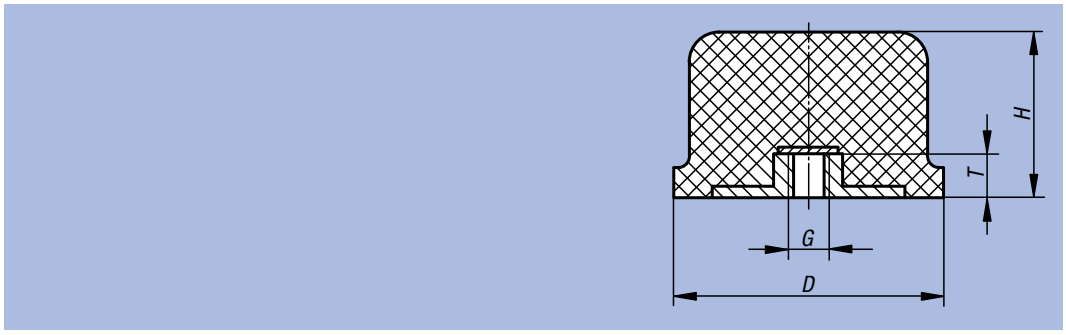

Material, surface finish:
Metal parts, galvanized steel, class 5.6; elastomer, natural rubber, medium hardness, 55° Shore A

Sample order:
nlm 26115-05003555

Note:
Rubber impact buffers excel owing to their robustness and the effective cushioning and abatement of shocks. Rubber impact buffers are ideally suited for elastic travel limitation and for the cushioning of shocks in the case of mobile and immobile aggregates, machines as well as stops in general.

Temperature resistant
-30 °C up to +80 °C.

Order No.	D	H	G	T	kg
26115-05003555	50	35	M10	8	0,088
26115-08006055	80	60	M12	10	0,308
26115-12509055	125	90	M16	14	0,830

Rubber-metal impact buffer rails



Material, surface finish:
Steel, black paint finish;
elastomer, natural rubber, medium hardness, 57° Shore A

Sample order:
nlm 26120-02501904557

Note:
For absorbing large impact forces and supporting heavy weights.

The indicated load data apply for static long-term load with a rubber hardness of 57° Shore A.

* Metal part 30 mm wide.

Temperature-resistant
-30°C up to +80°C.

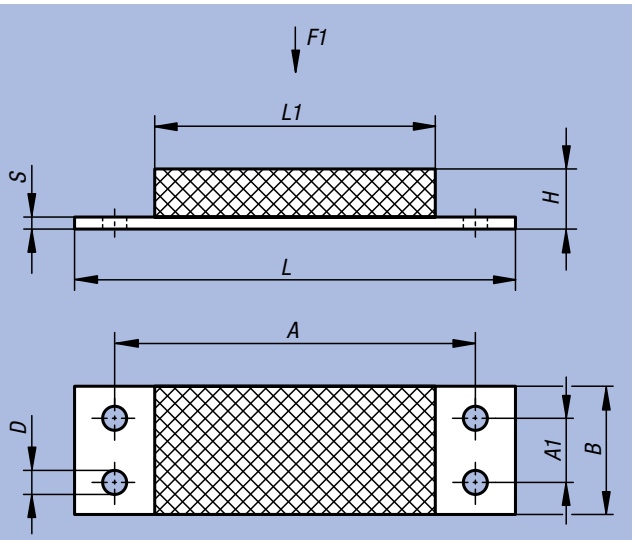

Order No.	A	A1	B	D	H	L	L1	S	F1 (N)	kg
26120-02501904557	68,6	-	25*	6,5	19	84	45	3	500	0,075
26120-05003507057	100	-	50	8,5	35	130	70	5	3100	0,382
26120-05007007057	100	-	50	8,5	70	130	70	5	2500	0,526
26120-10004512057	160	50	100	13	45	200	120	10	14000	2,030
26120-10008012057	160	50	100	13	80	200	120	10	8500	2,44
26120-12004515057	200	60	120	15	45	250	150	10	18000	2,98
26120-15005020057	250	80	150	17	50	300	200	15	34000	6,42

O-shaped mounts



Material, surface finish:
Metal parts, galvanized steel, class 5.6; elastomer, natural rubber, medium hardness, 57° Shore A

Sample order:
nlm 26130-01201257

Note:
O-shapes mounts have a very soft spring characteristic, which is why they are also called low-frequency supports. They serve for low-vibration support of instruments, and electrical components, as well as for mounting light assemblies and precision mechanical equipment.

The spring characteristic of the O-shaped mounts increases in the order X, Y and Z. The main load direction is the longitudinal axis of the threaded bolts (Z direction).

Temperature-resistant
-30°C up to +80°C.

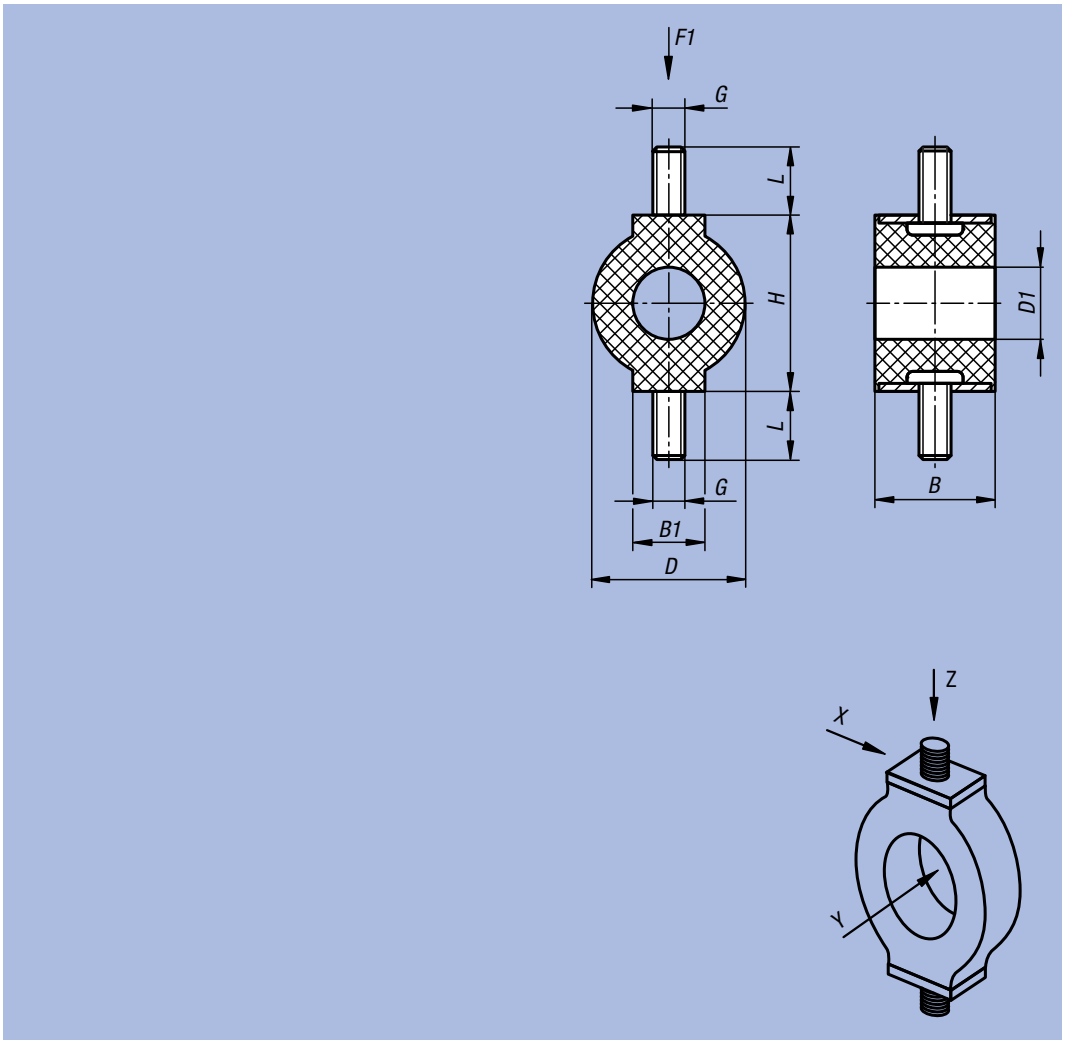

Order No.	B	B1	D	D1	G	H	L	F1 (N)	g
26130-01201257	9,5	9,5	12,5	6	M4	12,5	10	8	6
26130-01401757	13	6	14	6	M4	17	10	18	7
26130-02503057	20	12	25	12	M5	30	10	55	18

Industrial shock absorbers



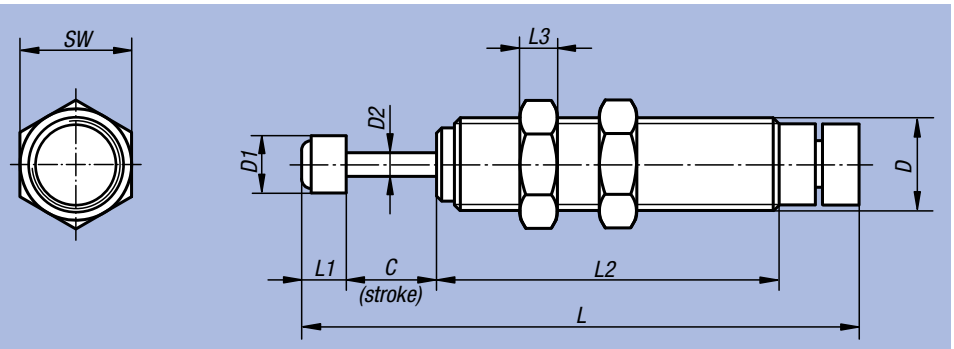

Material, surface finish:
Housing, steel, nickel-plated;
housing M8x0.75, stainless steel, natural finish;
piston rod, steel, hard-chrome plated;
nut, steel, nickel-plated;
collision head, steel, plastic

Sample order:
nlm 26300-0807506

Note:
Industrial shock absorbers are maintenance-free, ready-to-install hydraulic components. They have an integrated fixed stop. The adjustable model makes precise adjustment of the abatement possible. After installation of the shock absorber, the device is run a few times, whereby the adjustment is rotated until the optimal breaking is reached.
Exceeding the max. energy intake per hour is possible if temporarily disconnected or the shock absorber is cooled with cylinder exhaust air.

Temperature resistant
-5 °C up to +70 °C.

Order No.	D	D1	D2	C (stroke)	L	L1	L2	L3	SW
26300-0807506	M8x0,75	6	2,5	6	58	5	41	2	11
26300-0810008	M8x1	6,4	2,5	8	61,1	5,1	43,9	3	10
26300-1010008	M10x1	6	2,4	8	65	6	41	3	13
26300-1210010	M12x1	8	3,5	10	84	8	61	4	14
26300-1415010	M14x1,5	10	3,5	10	88	8	59	6	17
26300-2015016	M20x1,5	18	6	16	127	17	76	8	24
26300-2515030	M25x1,5	22	8	30	173	18	111	10	32

Order No.	max. power consumption per stroke Nm	max. power consumption per hour Nm	Effective mass max. kg	Speed range m/s	Restoring force N	Axis deviation max. (°)	kg
26300-0807506	1,4	2202	15	0,3 - 2	9	2,5	0,014
26300-0810008	3,5	5650	15	0,3 - 2	5,3	2	0,009
26300-1010008	1,76	3528	10	0,3 - 2	5,88	2,5	0,027
26300-1210010	4,9	5880	30	0,3 - 2	9,8	2,5	0,047
26300-1415010	5,88	8820	35	0,3 - 2	9,8	2,5	0,073
26300-2015016	29,4	20580	200	0,3 - 2	18,1	2,5	0,202
26300-2515030	49	29400	300	0,3 - 2	33,2	2,5	0,436

Installation Flange



Material, surface finish:
Steel, nickel-plated

Sample order:
nlm 26320-08075

Note:
When using the installation flange, a locking nut for securing shock absorber must be provided. Owing to its compact construction, it can be engineered to save space.

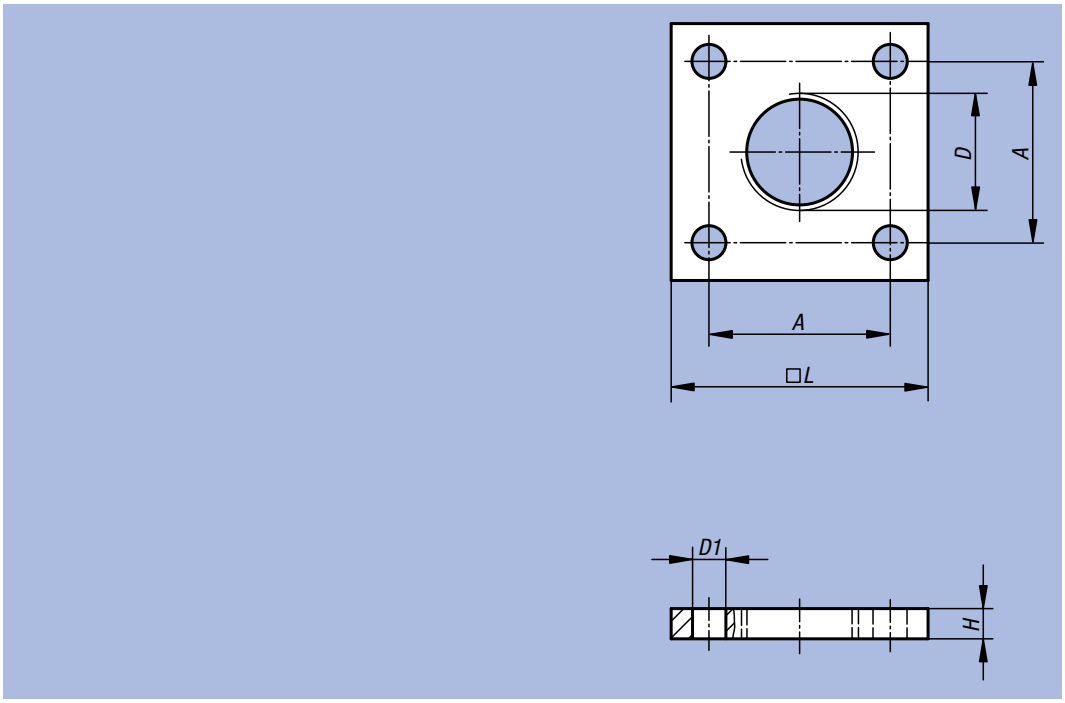

Order No.	A	D	D1	H	L	□ kg
26320-08075	18	M8x0,75	3,2	4	25	0,017
26320-10100	18	M10x1	3,2	4	25	0,016
26320-12100	18	M12x1	3,2	4	25	0,015
26320-14150	24	M14x1,5	4,5	4	34	0,029
26320-20150	28	M20x1,5	6,5	12	40	0,109
26320-25150	40	M25x1,5	9	12	54	0,204

Notes:

27000

- Fork Joints
- Rod Ends
- Ball Joints
- Axial Joints
- Height Adjustment Elements
- Swivel Pads
- Swivel Feets
- Screw-in Plugs
- Equipment Feet
- Hinges



Fork Joints with snap-on spring



Material:
Fork head and bolts of free-cutting steel, spring leg of spring steel

Surface finish:
Galvanized and chromated

Sample order:
nlm 27620-0510

On request:
Left-handed thread.

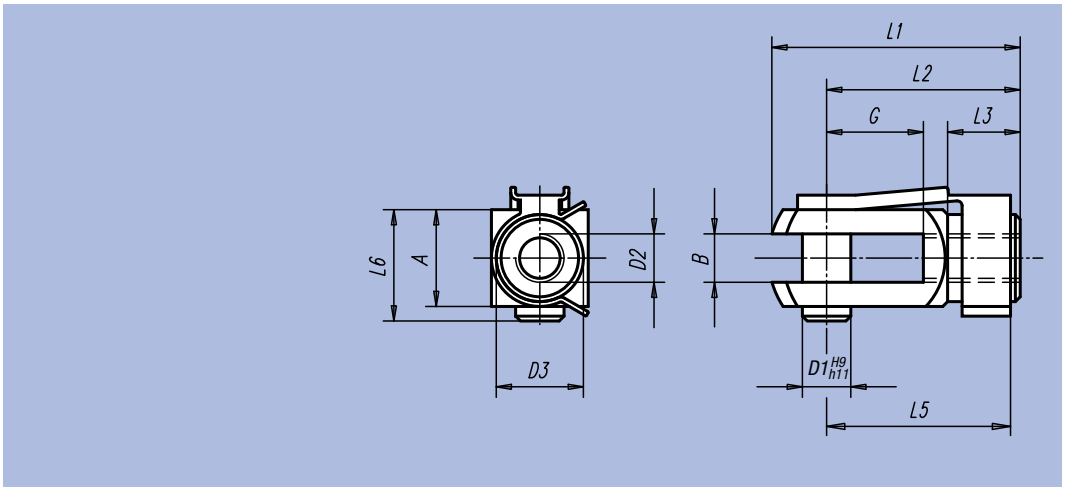

Order No.	Surface finish	D1	D2	D3	L1	L2	L3	~L5	~L6	A	B	G	g
27620-0510	right-handed thread	5	M5	9	26	20	7,5	19	12	10	5	10	12,0
27620-0612	right-handed thread	6	M6	10	31	24	9	23	14	12	6	12	20,0
27620-0816	right-handed thread	8	M8	14	42	32	12	31	19	16	8	16	37,0
27620-0832	right-handed thread	8	M8	14	58	48	12	47	19	16	8	32	66,0
27620-1020	right-handed thread	10	M10	18	52	40	15	39	23	20	10	20	93,0
27620-10120	right-handed thread	10	M10x1,25	18	52	40	15	39	23	20	10	20	93,0
27620-1040	right-handed thread	10	M10	18	72	60	15	59	23	20	10	40	137,0
27620-10140	right-handed thread	10	M10x1,25	18	72	60	15	59	23	20	10	40	137,0
27620-1224	right-handed thread	12	M12	20	62	48	18	47	28	24	12	24	155,0
27620-12124	right-handed thread	12	M12x1,25	20	62	48	18	47	28	24	12	24	155,0
27620-1248	right-handed thread	12	M12	20	86	72	18	69	28	24	12	48	210,0
27620-12148	right-handed thread	12	M12x1,25	20	86	72	18	69	28	24	12	48	210,0
27620-1428	right-handed thread	14	M14	24	72	56	22,5	52	31	27	14	28	223,0
27620-1632	right-handed thread	16	M16	26	83	64	24	62	36	32	16	32	352,0
27620-16132	right-handed thread	16	M16x1,5	26	83	64	24	62	36	32	16	32	352,0

Fork Joints

in stainless steel



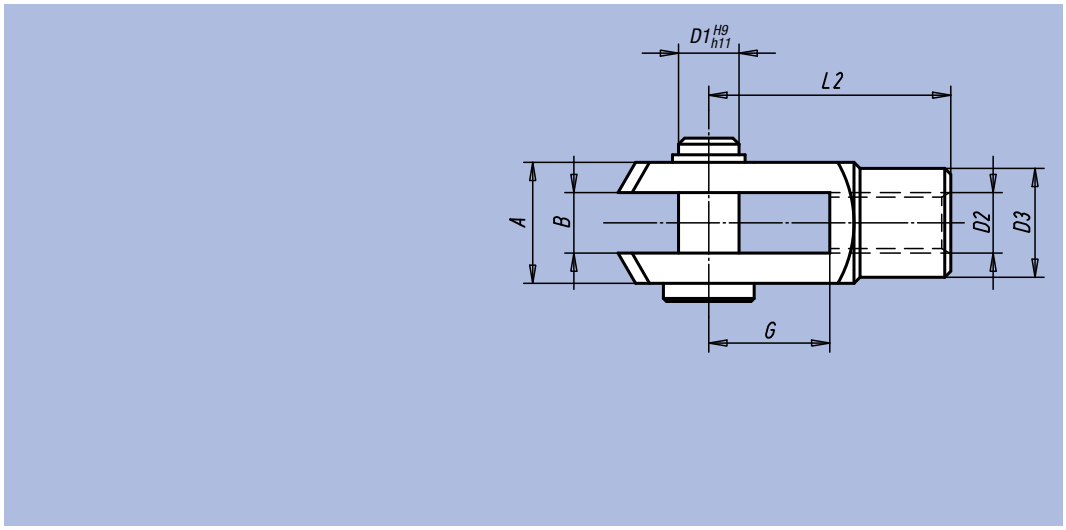

Material:
Stainless steel 1.4305

Surface finish:
Natural finish

Sample order:
nlm 27622-0816

On request:
Left-handed thread.

Order No.	D1	D2	D3	L2	A	B	G	kg
27622-0510	5	M5	9	20	10	5	10	0,011
27622-0612	6	M6	10	24	12	6	12	0,018
27622-0816	8	M8	14	32	16	8	16	0,046
27622-0832	8	M8	14	48	16	8	32	0,062
27622-1020	10	M10	18	40	20	10	20	0,091
27622-10120	10	M10x1,25	18	40	20	10	20	0,091
27622-1040	10	M10	18	60	20	10	40	0,120
27622-1224	12	M12	20	48	24	12	24	0,150
27622-12124	12	M12x1,25	20	48	24	12	24	0,150
27622-1248	12	M12	20	72	24	12	48	0,201
27622-12148	12	M12x1,25	20	72	24	12	48	0,201
27622-1428	14	M14	24	56	27	14	28	0,218
27622-1632	16	M16	26	64	32	16	32	0,338
27622-16132	16	M16x1,5	26	64	32	16	32	0,338

Fork Joints



Material:
Free-cutting steel

Surface finish:
Galvanized

Sample order:
nlm 27624-0510

On request:
Left-handed thread.

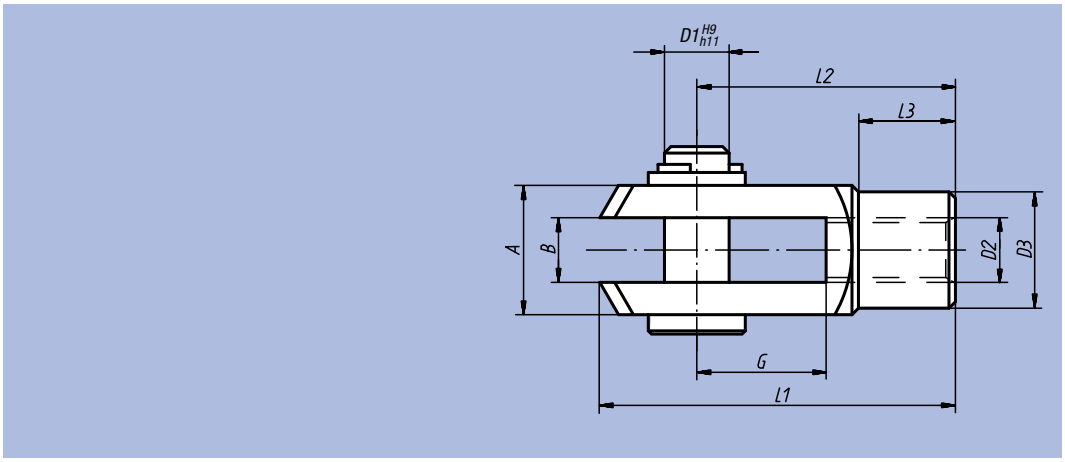

Order No.	Surface finish	D1	D2	D3	L1	L2	L3	A	B	G	g
27624-0510	right-handed thread	5	M5	9	26	20	7,5	10	5	10	10,0
27624-0612	right-handed thread	6	M6	10	31	24	9	12	6	12	16,0
27624-0816	right-handed thread	8	M8	14	42	32	12	16	8	16	38,0
27624-0832	right-handed thread	8	M8	14	58	48	12	16	8	32	55,0
27624-1020	right-handed thread	10	M10	18	52	40	15	20	10	20	80,0
27624-10120	right-handed thread	10	M10x1,25	18	52	40	15	20	10	20	80,0
27624-1040	right-handed thread	10	M10	18	72	60	15	20	10	40	120,0
27624-10140	right-handed thread	10	M10x1,25	18	72	60	15	20	10	40	120,0
27624-1224	right-handed thread	12	M12	20	62	48	18	24	12	24	125,0
27624-12124	right-handed thread	12	M12x1,25	20	62	48	18	24	12	24	125,0
27624-1248	right-handed thread	12	M12	20	86	72	18	24	12	48	180,0
27624-12148	right-handed thread	12	M12x1,25	20	86	72	18	24	12	48	180,0
27624-1428	right-handed thread	14	M14	24	72	56	22,5	27	14	28	190,0
27624-1632	right-handed thread	16	M16	26	83	64	24	32	16	32	300,0
27624-16132	right-handed thread	16	M16x1,5	26	83	64	24	32	16	32	300,0

Rod Ends with ball bearing

external thread



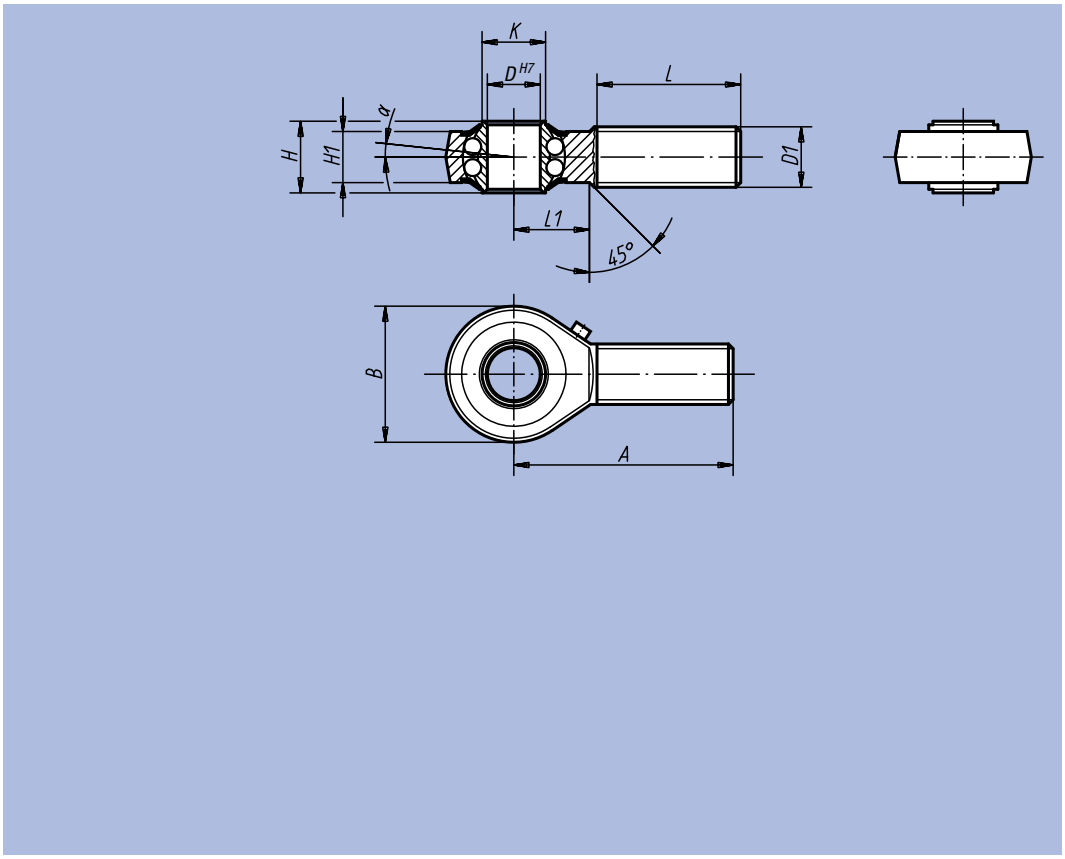

Material:
Casing: drop-forged steel, tempered

Surface finish:
Galvanized;
internal clearance 15 – 40 µm

Sample order:
nlm 27625-12

Note:
The hardened ball bearing is long-term greased and sealed with cover washers. The connection dimensions comply with DIN 648 Form Series KA. Rod ends are primarily used where movement processes are transmitted and there is no exact alignment.

Order No. Surface finish right-handed thread	Order No. Surface finish left-handed thread	D	D1	A	B	H	H1	K	L	L1	α	Dynamic base loads N	Static base loads N	Rev. limit n max. 1/min	kg
27625-06	**27625-061**	6	M6	36	20	9	6,75	9	22	12	8°	2750	650	1350	0,019
27625-08	**27625-081**	8	M8	42	24	12	9	10,5	25	15	8,5°	4000	1000	1300	0,036
27625-10	**27625-101**	10	M10	48	28	14	10,5	12	29	15	8°	4450	1450	1225	0,060
27625-12	**27625-121**	12	M12	54	32	16	12	14,5	33	19	7,5°	4950	1800	1125	0,087
27625-16	**27625-161**	16	M16	66	42	21	15	19	40	22	8°	6250	2350	975	0,190
27625-20	**27625-201**	20	M20x1,5	78	50	25	18	24,5	47	28	7°	7900	3450	825	0,338
27625-22	**27625-221**	22	M22x1,5	84	54	28	20	26	51	26	8°	9300	3980	725	0,450

Rod Ends with ball bearing

internal thread



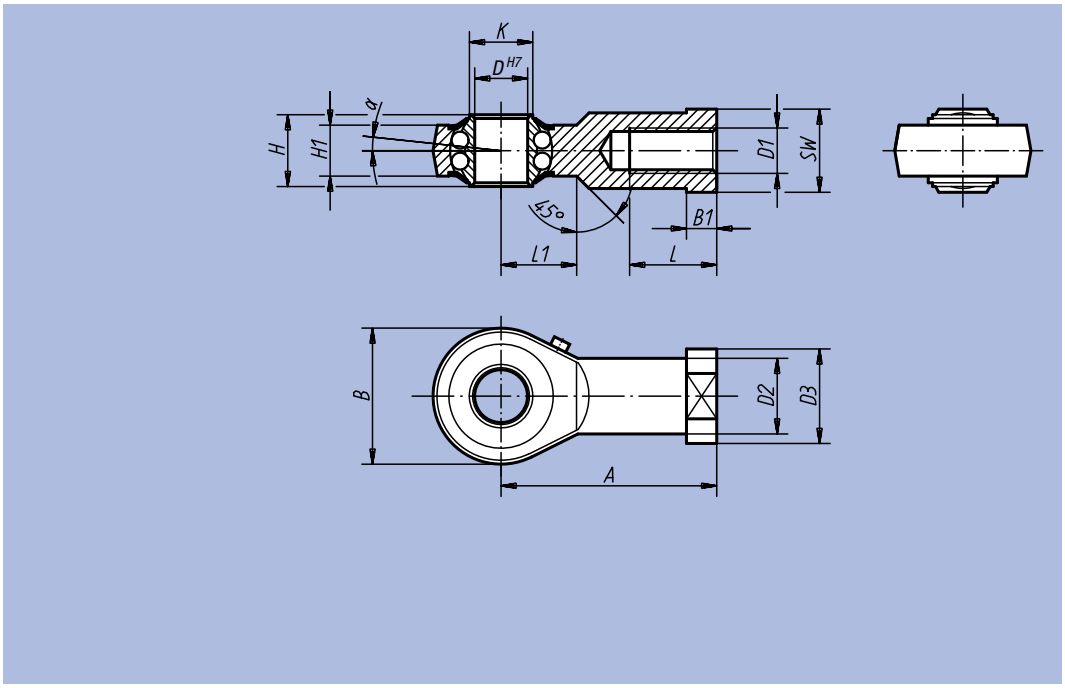

Material:
Casing: drop-forged steel, tempered

Surface finish:
Galvanized;
internal clearance 15 – 40 µm.

Sample order:
nlm 27626-16

Note:
The hardened ball bearing is long-term greased and sealed with cover washers. The connection dimensions comply with DIN 648 Form Series KA.

Order No. Surface finish right-handed thread	Order No. Surface finish left-handed thread	D	D1	D2	D3	A	B	B1	H	H1	K	L	L1	SW	α	Dynamic base loads N	Static base loads N	Rev. limit n max. 1/min	kg
27626-06	**27626-061**	6	M6	10	13	30	20	5	9	6,75	9	12	10	11	8°	2750	650	1350	0,024
27626-08	**27626-081**	8	M8	12,5	16	36	24	5	12	9	10,5	16	12	14	8,5°	4000	1000	1300	0,044
27626-10	**27626-101**	10	M10	15	19	43	28	6,5	14	10,5	12	20	15	17	8°	4450	1450	1225	0,072
27626-12	**27626-121**	12	M12	17,5	22	50	32	6,5	16	12	14,5	22	16	19	7,5°	4950	1800	1125	0,107
27626-16	**27626-161**	16	M16	22	27	64	42	8	21	15	19	28	22	22	8°	6250	2350	975	0,224
27626-20	**27626-201**	20	M20x1,5	27,5	34	77	50	10	25	18	24,5	33	26	30	7°	7900	3450	825	0,367
27626-22	**27626-221**	22	M22x1,5	30	38	84	54	12	28	20	26	37	26	32	8°	9300	3980	725	0,480

Rod Ends with slide bearing

external thread



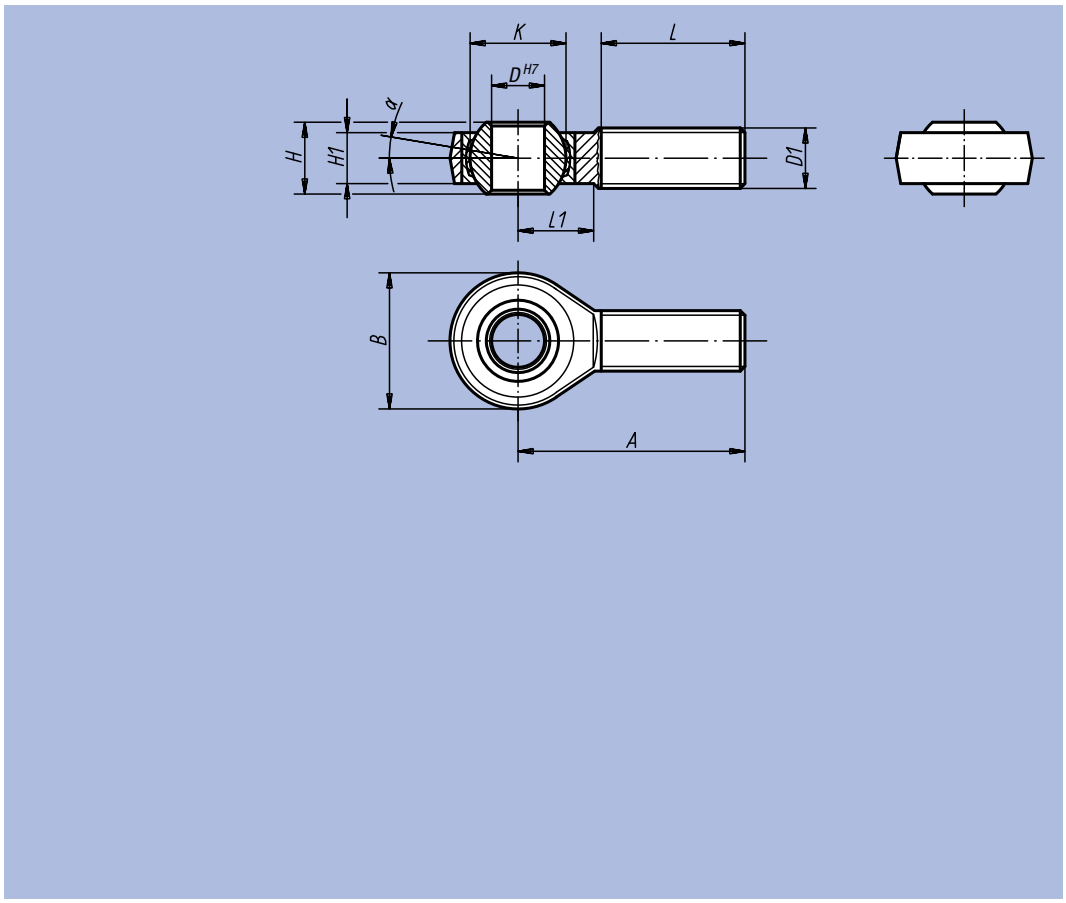

Material:
Casing size (D) 5-12: free-cutting steel, turned.
Casing as of size (D) 16: tempered steel, forged. Ball joint: roller bearing steel, hardened, ground and polished. Bearing shell: free-cutting steel with PTFE cloth glued in

Surface finish:
galvanized

Sample order:
nlm 27627-20

Note:
The slide bearing of the rod ends is maintenance-free. The connection dimensions comply with DIN 648 Form Series KA.

Order No. Surface finish right-handed thread	Order No. Surface finish left-handed thread	D	D1	A	B	H	H1	K	L	L1	α	Dynamic base loads kN	Static base loads kN	kg
27627-05	27627-051	5	M5	33	18	8	6	11,11	20	9	13°	7,5	4,3	0,013
27627-06	27627-061	6	M6	36	20	9	6,75	12,7	22	12	13°	9,3	6	0,020
27627-08	27627-081	8	M8	42	24	12	9	15,87	25	15	13°	16,7	11	0,033
27627-10	27627-101	10	M10	48	28	14	10,5	19,05	29	15	13°	23,4	17,4	0,056
27627-12	27627-121	12	M12	54	32	16	12	22,22	33	19	13°	32	23,5	0,087
27627-16	27627-161	16	M16	66	42	21	15	28,57	40	22	15°	52,7	32	0,189
27627-20	27627-201	20	M20x1,5	78	50	25	18	34,92	47	28	15°	78,1	43,8	0,348
27627-22	27627-221	22	M22x1,5	84	54	28	20	38,1	51	26	15°	97,2	52,6	0,443

igubal® Rod Ends with slide bearing

external thread



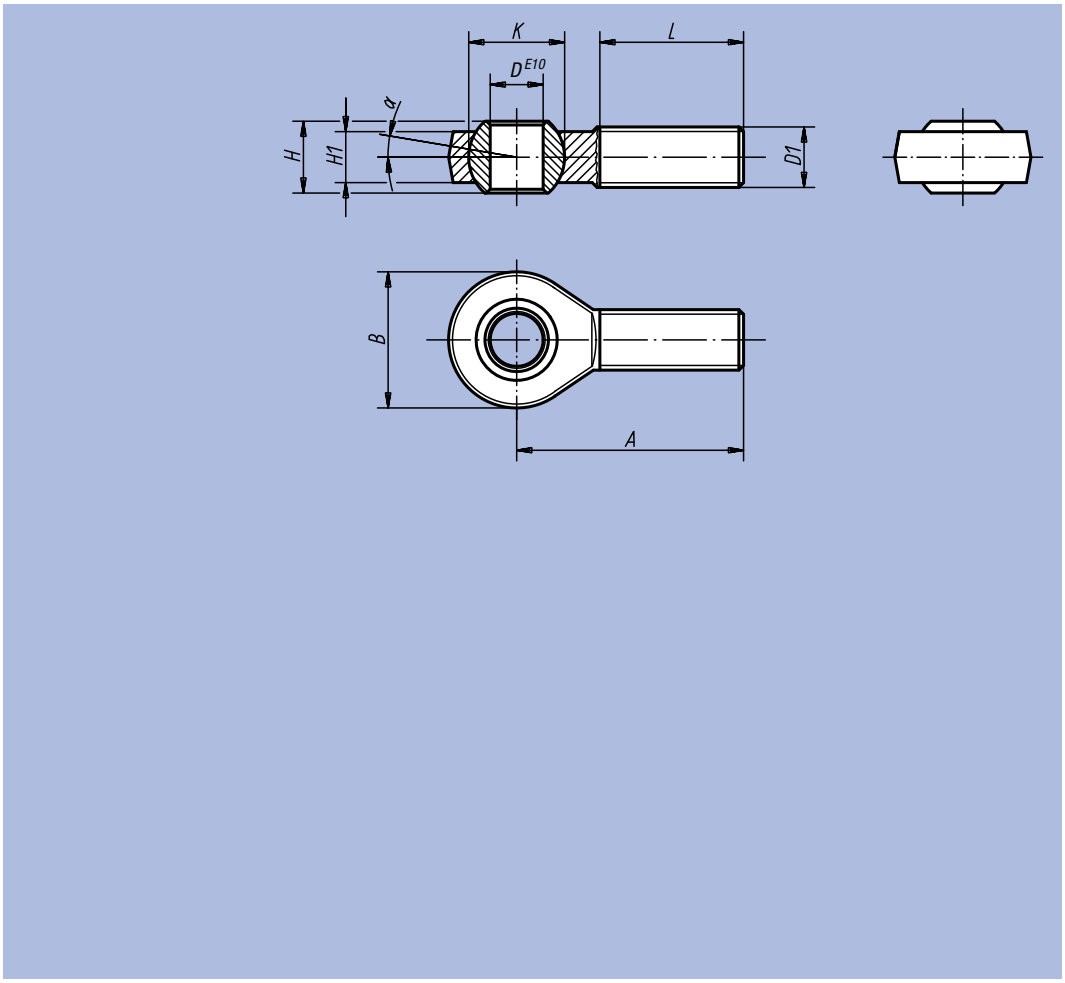

Material:
Casing aus igumid® G,
Spherical cap of the bearing iglidur® W300.

Surface finish:
Black

Sample order:
nlm 27627-105

Note:
The rod end has very high rigidity under alternating stresses, it is insensitive to dirt, dust and fluff, and is both corrosion and chemical resistant. It is ideal for rotary, oscillating and linear movements.
The connection dimensions comply with the dimensional series K pursuant to DIN ISO 12240.

Tolerances:
The drill hole of the inner ring is machined to tolerance E10.
The associated shaft should have tolerances bebtween h6 and h9.

Order No. Surface finish right-handed thread	Order No. Surface finish left-handed thread	D	D1	A	B	H	H1	K	L	α	Max. static tensile stress N short-term	Max. static tensile stress N long-term	Max. transverse stress N short-term	Max. transverse stress N long-term	□ g
27627-105	27627-1051	5	M5	33	18	8	6	11,1	19	15°	800	400	80	40	2,7
27627-106	27627-1061	6	M6	36	20	9	7	12,7	21	14,5°	1000	500	100	50	3,9
27627-108	27627-1081	8	M8	42	24	12	9	15,8	25	12,5°	1700	850	200	100	7,1
27627-110	27627-1101	10	M10	48	30	14	10,5	19	28	12,5°	2500	1250	300	150	12,5
27627-110125	27627-1101251	10	M10x1,25	48	30	14	10,5	19	28	12,5°	2500	1250	300	150	12,5
27627-112	27627-1121	12	M12	54	34	16	12	22,2	32	12,5°	2700	1350	400	200	18,1
27627-112125	27627-1121251	12	M12x1,25	54	34	16	12	22,2	32	12,5°	2700	1350	400	200	18,1
27627-114	27627-1141	14	M14	61	38	19	13,5	25,25	36	12,5°	3400	1700	700	350	25,5
27627-116	27627-1161	16	M16	66	42	21	15	28,3	37	11,5°	3900	1950	800	400	34,3
27627-116150	27627-1161501	16	M16x1,5	66	42	21	15	28,3	37	11,5°	3900	1950	800	400	34,3
27627-118150	27627-1181501	18	M18x1,5	72	46	23	16,5	31,35	41	11,5°	4200	2100	1000	500	46,5
27627-120	27627-1201	20	M20	78	50	25	18	34,9	45	11,5°	6000	3000	1300	650	58,5
27627-120150	27627-1201501	20	M20x1,5	78	50	25	18	34,9	45	11,5°	6000	3000	1300	650	58,5

Rod Ends with slide bearing

internal thread



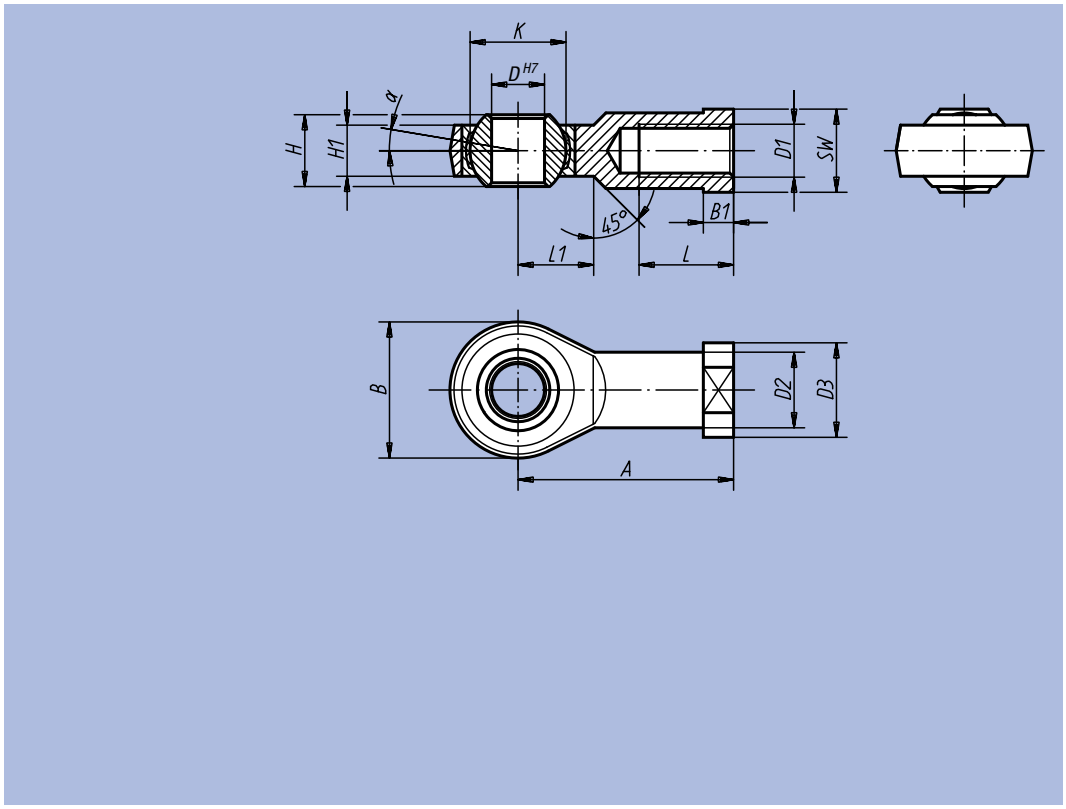

Material:
Casing size (D) 5-12: free-cutting steel, turned.
Casing as of size (D) 16: tempered steel, forged. Ball joint: roller bearing steel, hardened, ground and polished. Bearing shell: free-cutting steel with PTFE cloth glued in

Surface finish:
galvanized

Sample order:
nlm 27628-22

Note:
The slide bearing of the rod ends is maintenance-free. The connection dimensions comply with DIN 648 Form Series KJ.

Order No. Surface finish right-handed thread	Order No. Surface finish left-handed thread	D	D1	D2	D3	A	B	B1	H	H1	K	L	L1	SW	α	Dynamic base loads kN	Static base loads kN	kg
27628-05	27628-051	5	M5	9	11	27	18	4	8	6	11,11	10	10	9	13°	7,5	8	0,018
27628-06	27628-061	6	M6	10	13	30	20	5	9	6,75	12,7	12	10	11	13°	9,3	8,9	0,027
27628-08	27628-081	8	M8	12,5	16	36	24	5	12	9	15,87	16	12	13	13°	16,7	14,1	0,046
27628-10	27628-101	10	M10	15	19	43	28	6,5	14	10,5	19,05	20	15	17	13°	23,4	19,3	0,076
27628-10125	27628-101251	10	M10x1,25	15	19	43	28	6,5	14	10,5	19,05	20	15	17	13°	23,4	19,3	0,076
27628-12	27628-121	12	M12	17,5	22	50	32	6,5	16	12	22,22	22	16	19	13°	32	23,5	0,115
27628-12125	27628-121251	12	M12x1,25	17,5	22	50	32	6,5	16	12	22,22	22	16	19	13°	32	23,5	0,115
27628-16	27628-161	16	M16	22	27	64	42	8	21	15	28,57	28	22	22	15°	52,7	32	0,230
27628-1615	27628-16151	16	M16x1,5	22	27	64	42	8	21	15	28,57	28	22	22	15°	52,7	32	0,230
27628-20	27628-201	20	M20x1,5	27,5	34	77	50	10	25	18	34,92	33	26	32	15°	78,1	43,8	0,415
27628-22	27628-221	22	M22x1,5	30	37	84	54	12	28	20	38,1	37	26	32	15°	97,2	52,6	0,540

igubal® Rod Ends with slide bearing

internal thread



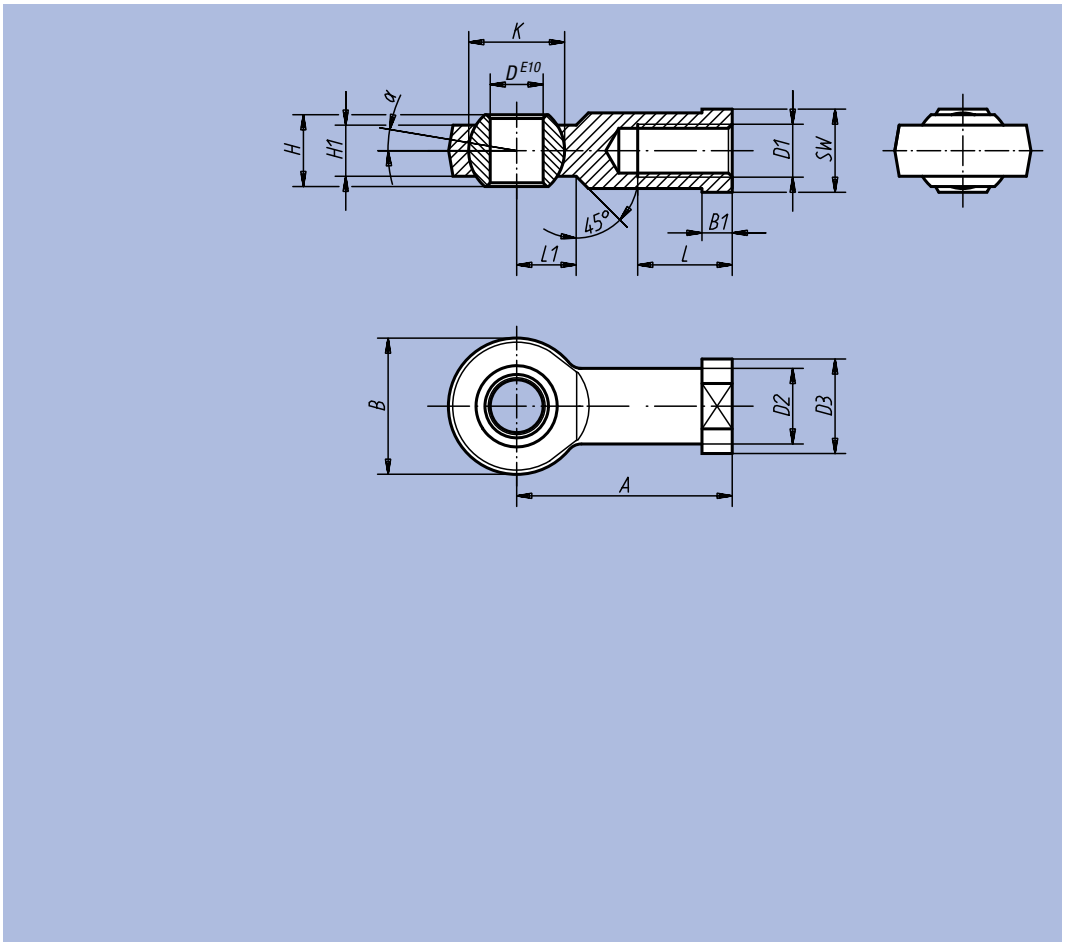

Material:
Casing igumid® G, Spherical cap of the bearing iglidur® W300.

Surface finish:
Black

Sample order:
nlm 27628-104

Note:
The rod end has very high rigidity under alternating stresses, it is insensitive to dirt, dust and fluff, and is both corrosion and chemical resistant. It is ideal for rotary, oscillating and linear movements.
The connection dimensions comply with the dimensional series K pursuant to DIN ISO 12240.

Tolerances:
The drill hole of the inner ring has tolerances to E10. The associated shaft should have tolerances bebtween h6 and h9.

Order No. Surface finish right-handed thread	Order No. Surface finish left-handed thread	D	D1	D2	D3	A	B	B1	H	H1	K	L	L1	SW	α	Max. static tensile stress N		Max. transverse stress N		◻ g
																short-term	long-term	short-term	long-term	
27628-104	27628-1041	5	M4	9	12	27	18	4	8	6	11,1	10	9	9	15°	1000	500	250	125	3,5
27628-105	27628-1051	5	M5	9	12	27	18	4	8	6	11,1	10	9	9	15°	1000	500	250	125	3,5
27628-106	27628-1061	6	M6	10	13	30	20	5	9	7	12,7	12	10	11	14,5°	1400	700	400	200	4,7
27628-108	27628-1081	8	M8	13	16	36	24	5	12	9	15,8	16	12	14	12,5°	2100	1050	700	350	8,7
27628-110	27628-1101	10	M10	15	19	43	30	6,5	14	10,5	19	20	14	17	12,5°	3100	1550	800	400	14,4
27628-110125	27628-1101251	10	M10x1,25	15	19	43	30	6,5	14	10,5	19	20	14	17	12,5°	3100	1550	800	400	14,4
27628-112	27628-1121	12	M12	-	-	50	34	-	16	12	22,2	22	16	17	12,5°	3600	1800	900	450	19,4
27628-112125	27628-1121251	12	M12x1,25	18	22	50	34	6,5	16	12	22,2	22	16	19	12,5°	3600	1800	900	450	19,4
27628-114	27628-1141	14	M14	20	25	57	38	8	19	13,5	25,25	25	18	22	11,5°	4000	2000	1000	500	30,5
27628-116	27628-1161	16	M16	22	27	64	42	8	21	15	28,3	28	21	22	11,5°	4200	2100	1300	650	39,9
27628-116150	27628-1161501	16	M16x1,5	22	27	64	42	8	21	15	28,3	28	21	22	11,5°	4200	2100	1300	650	39,9
27628-118150	27628-1181501	18	M18x1,5	25	31	71	46	10	23	16,5	31,35	32	23	27	11,5°	4600	2300	1600	800	55,2
27628-120	27628-1201	20	M20	28	34	77	50	10	25	18	34,9	33	25	30	11,5°	5400	2700	2100	1050	70,8
27628-120150	27628-1201501	20	M20x1,5	28	34	77	50	10	25	18	34,9	33	25	30	11,5°	5400	2700	2100	1050	70,8

Rod Ends with slide bearing

external thread, stainless steel



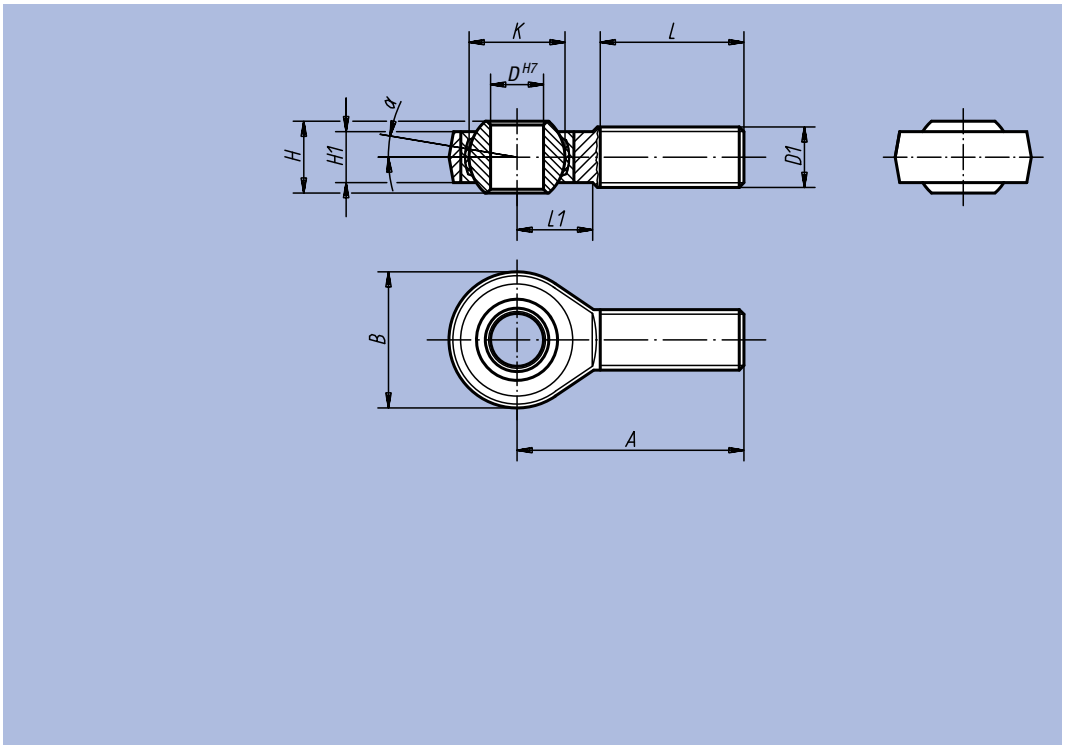

Material:
Casing: forged special steel 1.4057.
Ball joint 1.4034 hardened and ground.
Bearing shell: stainless steel 1.4571.

Surface finish:
polished

Sample order:
nlm 27629-20

Note:
The slide bearing of the rod ends is maintenance-free.
The connection dimensions comply with DIN 648 Form Series KA.

Order No. Surface finish right-handed thread	Order No. Surface finish left-handed thread	D	D1	A	B	H	H1	K	L	L1	α	Dynamic base loads kN	Static base loads kN	kg
27629-05	27629-051	5	M5	33	18	8	6	11,11	20	9	13°	7,5	6,2	0,013
27629-06	27629-061	6	M6	36	20	9	6,75	12,7	22	12	13°	9,3	8,8	0,020
27629-08	27629-081	8	M8	42	24	12	9	15,87	25	15	13°	16,7	16,1	0,033
27629-10	27629-101	10	M10	48	28	14	10,5	19,05	29	15	13°	23,4	25,5	0,056
27629-12	27629-121	12	M12	54	32	16	12	22,22	33	19	13°	32	34,5	0,087
27629-16	27629-161	16	M16	66	42	21	15	28,57	40	22	15°	52,7	60,6	0,189
27629-20	27629-201	20	M20x1,5	78	50	25	18	34,92	47	28	15°	78,1	83,1	0,348
27629-22	27629-221	22	M22x1,5	84	54	28	20	38,1	51	26	15°	97,2	99,7	0,443

Rod Ends with slide bearing

internal thread, stainless steel



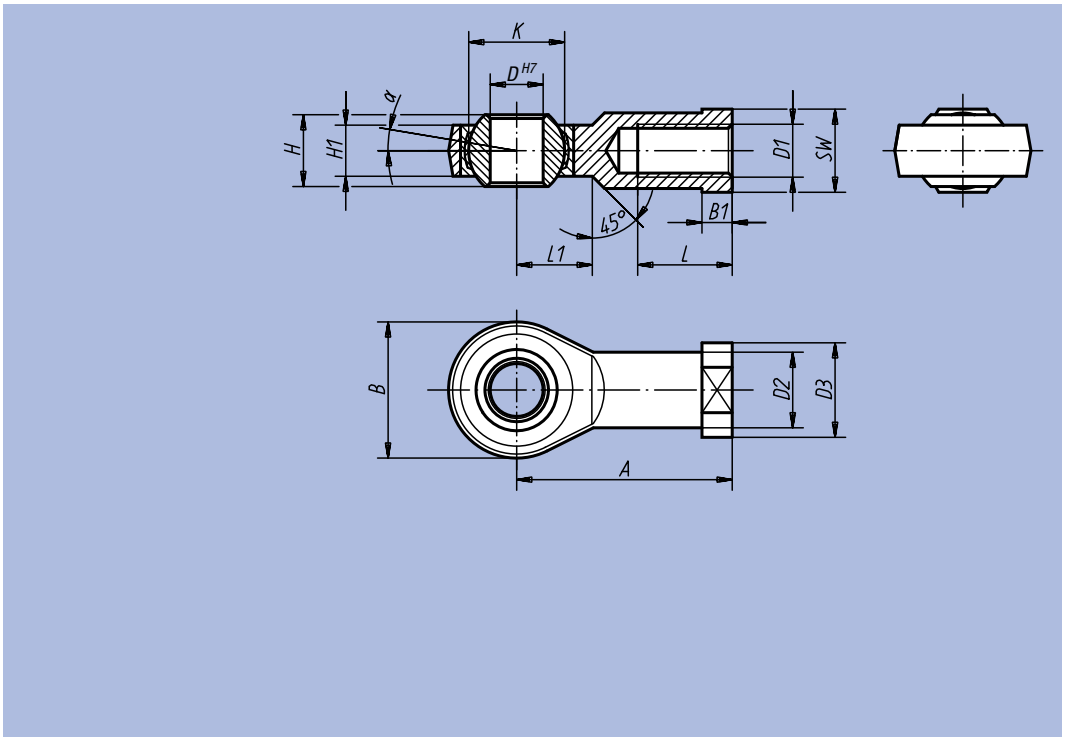

Material:
Casing: forged special steel 1.4057.
Ball joint 1.4034 hardened and ground.
Bearing shell: stainless steel 1.4571.

Surface finish:
polished

Sample order:
nlm 27630-22

Note:
The slide bearing of the rod ends is maintenance-free.
The connection dimensions comply with DIN 648 Form Series KJ.

Order No. Surface finish right-handed thread	Order No. Surface finish left-handed thread	D	D1	D2	D3	A	B	B1	H	H1	K	L	L1	SW	α	Dynamic base loads kN	Static base loads kN	kg
27630-05	27630-051	5	M5	9	11	27	18	4	8	6	11,11	10	10	9	13°	7,5	11,8	0,018
27630-06	27630-061	6	M6	10	13	30	20	5	9	6,75	12,7	12	10	11	13°	9,3	13,1	0,027
27630-08	27630-081	8	M8	12,5	16	36	24	5	12	9	15,87	16	12	13	13°	16,7	20,7	0,046
27630-10	27630-101	10	M10	15	19	43	28	6,5	14	10,5	19,05	20	15	17	13°	23,4	28,3	0,076
27630-10125	27630-101251	10	M10x1,25	15	19	43	28	6,5	14	10,5	19,05	20	15	17	13°	23,4	28,3	0,076
27630-12	27630-121	12	M12	17,5	22	50	32	6,5	16	12	22,22	22	16	19	13°	32	34,5	0,115
27630-12125	27630-121251	12	M12x1,25	17,5	22	50	32	6,5	16	12	22,22	22	16	19	13°	32	34,5	0,115
27630-16	27630-161	16	M16	22	27	64	42	8	21	15	28,57	28	22	22	15°	52,7	60,6	0,230
27630-1615	27630-16151	16	M16x1,5	22	27	64	42	8	21	15	28,57	28	22	22	15°	52,7	60,6	0,230
27630-20	27630-201	20	M20x1,5	27,5	34	77	50	10	25	18	34,92	33	26	32	15°	78,1	83,1	0,415
27630-22	27630-221	22	M22x1,5	30	37	84	54	12	28	20	38,1	37	26	32	15°	97,2	99,7	0,540

Rod Ends with slide bearing

external thread, narrow head



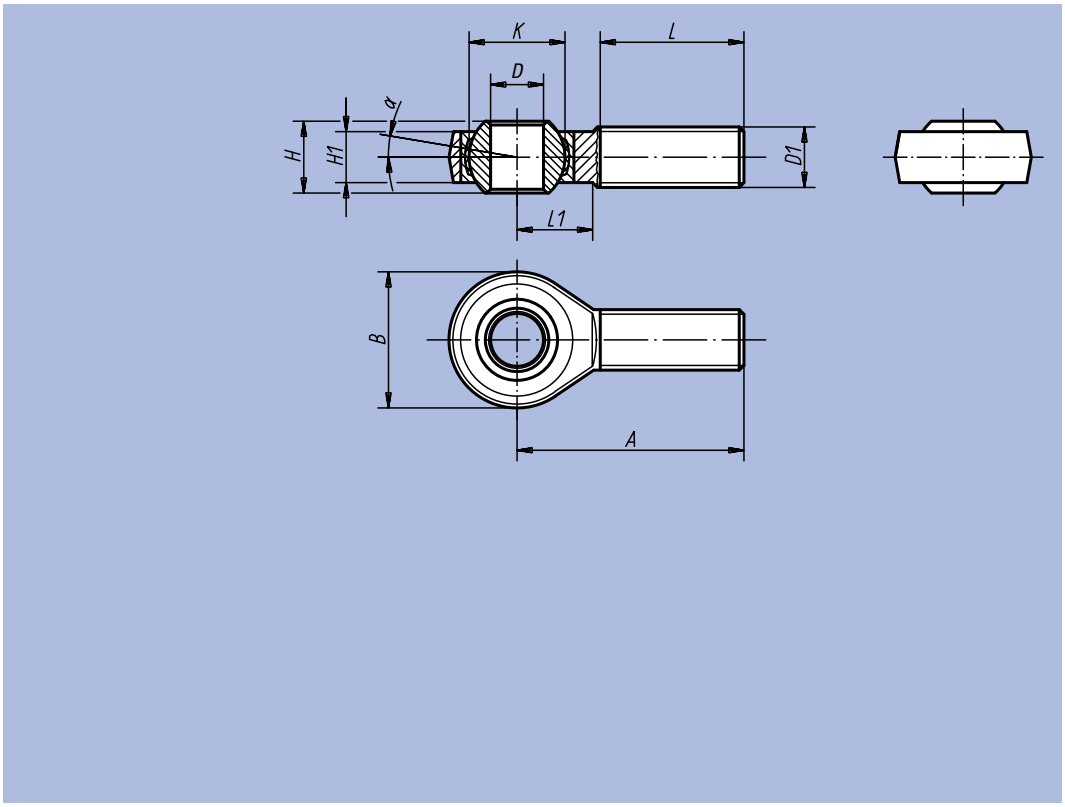

Material:
Casing size (D) 6-10: free-cutting steel, turned. Casing as of size (D) 12: tempered steel, forged. Ball joint: roller bearing steel, hardened, ground, polished and hard-chromium-plated. Bearing shell: roller bearing steel with PTFE cloth glued in

Surface finish:
galvanized

Sample order:
nlm 27631-20

Note:
The slide bearing of the rod ends is maintenance-free.
The connection dimensions comply with DIN 648 Form Series E.

Order No. Surface finish right-handed thread	Order No. Surface finish left-handed thread	D	D1	A	B	H	H1	K	L	L1	α	Dynamic base loads kN	Static base loads kN	◻ kg
27631-06	27631-061	6 -0,008	M6	36	20	6	4,4	10	18	11	12°	3,6	8,2	0,016
27631-08	27631-081	8 -0,008	M8	42	24	8	6	13	22	12	12°	5,8	12,9	0,028
27631-10	27631-101	10 -0,008	M10	48	28	9	7	16	26	15	12°	8,6	17,6	0,050
27631-12	27631-121	12 -0,008	M12	54	34	10	8	18	28	15	8°	11,4	24,5	0,086
27631-16	27631-161	17 -0,008	M16	69	46	14	11	25	36	23	8°	22	45	0,190
27631-20	27631-201	20 -0,010	M20x1,5	78	53	16	13	29	43	25	8°	31,5	60	0,320

Rod Ends with slide bearing

internal thread, narrow head



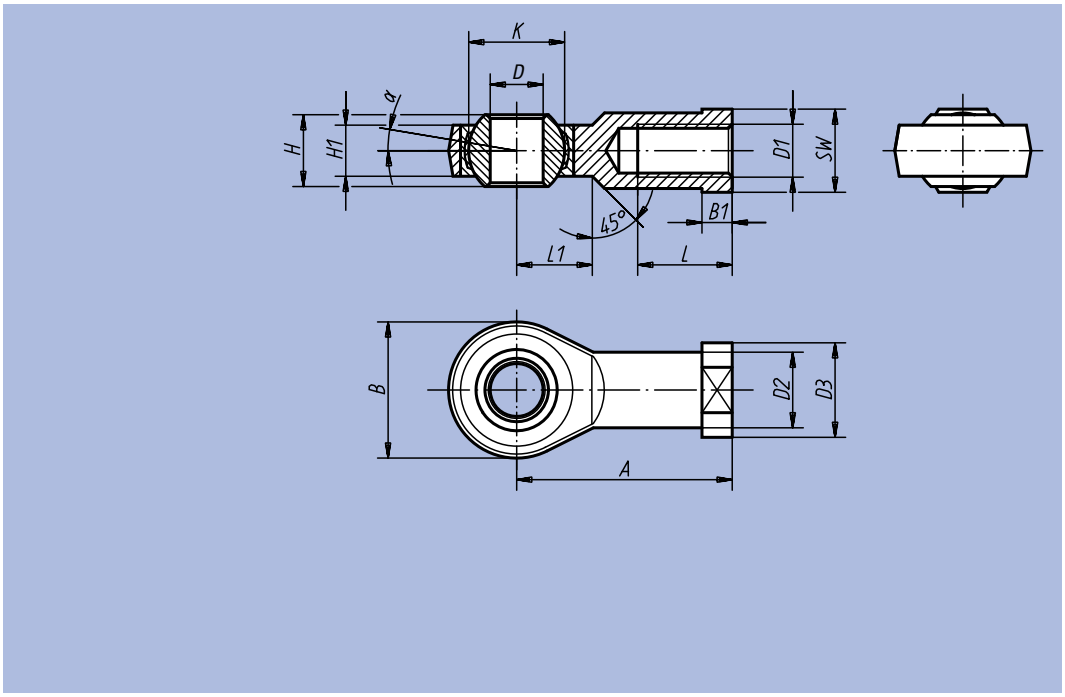

Material:
Casing size (D) 6-10: free-cutting steel, turned. Casing as of size (D) 12: tempered steel, forged. Ball joint: roller bearing steel, hardened, ground, polished and hard-chromium-plated. Bearing shell: roller bearing steel with PTFE cloth glued in

Surface finish:
galvanized

Sample order:
nlm 27632-12

Note:
The slide bearing of the rod ends is maintenance-free.
The connection dimensions comply with DIN 648 Form Series E.

Order No. Surface finish right-handed thread	Order No. Surface finish left-handed thread	D	D1	D2	D3	A	B	B1	H	H1	K	L	L1	SW	α	Dynamic base loads kN	Static base loads kN	kg
27632-06	27632-061	6 -0,008	M6	10	13	30	20	5	6	4,4	10	12	11	11	12°	3,6	8,2	0,021
27632-08	27632-081	8 -0,008	M8	12,5	16	36	24	5	8	6	13	16	12	14	12°	5,8	12,9	0,038
27632-10	27632-101	10 -0,008	M10	15	19	43	28	6,5	9	7	16	20	13	17	12°	8,6	17,6	0,060
27632-10125	27632-101251	10 -0,008	M10x1,25	15	19	43	28	6,5	9	7	16	20	13	17	12°	8,6	17,6	0,060
27632-12	27632-121	12 -0,008	M12	17,5	22	50	34	6,5	10	8	18	22	15	19	8°	11,4	24,5	0,096
27632-12125	27632-121251	12 -0,008	M12x1,25	17,5	22	50	34	6,5	10	8	18	22	15	19	8°	11,4	24,5	0,096
27632-16	27632-161	17 -0,008	M16	24	30	67	46	10	14	11	25	33	20	27	8°	22	45	0,280
27632-20	27632-201	20 -0,010	M20x1,5	27,5	35	77	53	10	16	13	29	38	23	32	8°	31,5	60	0,350

Ball Joints

DIN 71802



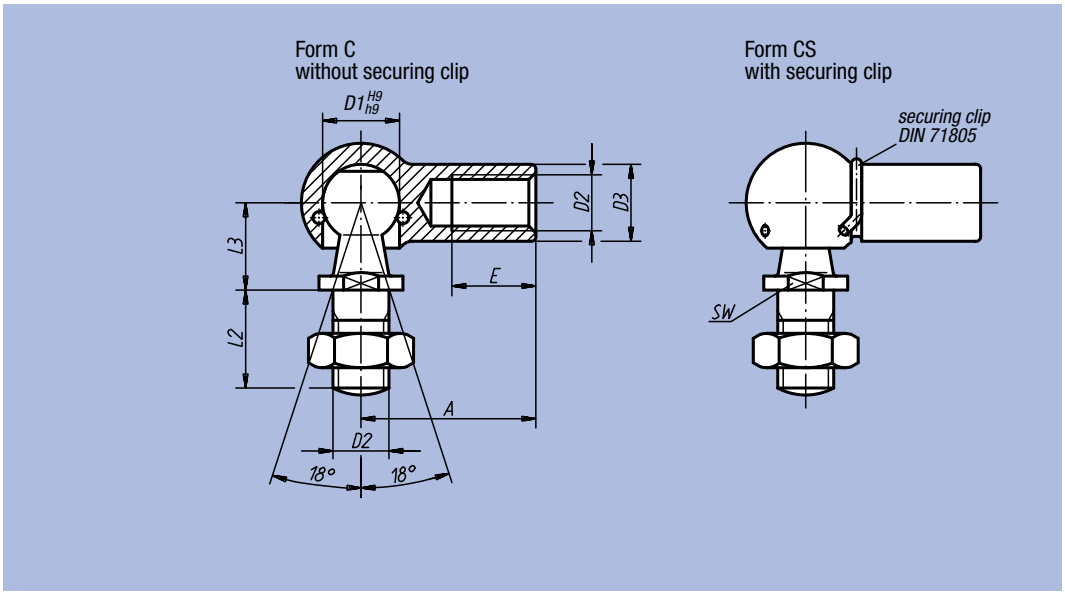

Material:
Steel or stainless steel (1.4305)

Surface finish:
galvanized and chromated.
Stainless steel natural finish.

Sample order:
nlm 27650-08051

Note:
Left-handed thread available on request.

Order No.	Form	Material	D1	D2	D3	A	L2	L3	E	SW	g
27650-0805	C	steel	8	M5	8	22	10	9	10,2	7	15,2
27650-1006	C	steel	10	M6	10	25	12	11	11,5	8	25,2
27650-1308	C	steel	13	M8	13	30	16	13	14	11	53,1
27650-1610	C	steel	16	M10	16	35	19	16	15,5	13	103,8
27650-1612	C	steel	16	M12	16	35	19	16	15,5	13	103,8
27650-1914	C	steel	19	M14x1,5	22	45	27	20	21,5	16	220,9
27650-1916	C	steel	19	M16	22	45	27	20	21,5	16	220,9
27650-08051	CS	steel	8	M5	8	22	10	9	10,2	7	15,2
27650-10061	CS	steel	10	M6	10	25	12	11	11,5	8	25,2
27650-13081	CS	steel	13	M8	13	30	16	13	14	11	53,1
27650-16101	CS	steel	16	M10	16	35	19	16	15,5	13	103,8
27650-16121	CS	steel	16	M12	16	35	19	16	15,5	13	103,8
27650-19141	CS	steel	19	M14x1,5	22	45	27	20	21,5	16	220,9
27650-19161	CS	steel	19	M16	22	45	27	20	21,5	16	220,9
27650-08052	CS	stainless steel	8	M5	8	22	10	9	10,2	7	15,2
27650-10062	CS	stainless steel	10	M6	10	25	12	11	11,5	8	25,2
27650-13082	CS	stainless steel	13	M8	13	30	16	13	14	11	53,1
27650-16102	CS	stainless steel	16	M10	16	35	19	16	15,5	13	103,8
27650-16122	CS	stainless steel	16	M12	16	35	19	16	15,5	13	103,8

Ball seats for angle joints

DIN 71805



Material:
Steel

Surface finish:
galvanized and chromated

Sample order:
nlm 27655-08051

Note:
The ball sockets are spare parts for DIN 71802 (27650) ball joints. See 27660 for suitable retaining rings for Form B. Stainless steel ball joints available on request.

Form A
with snap ring

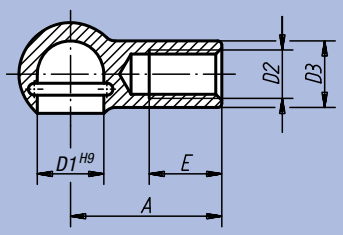

Form B
with snap ring and slot
for securing clip

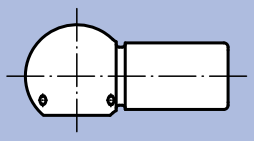

Order No. Form A	Order No. Form B	D1	D2	D3	A	E
27655-0805	27655-08051	8	M5	8	22	10,2
27655-1006	27655-10061	10	M6	10	25	11,5
27655-1308	27655-13081	13	M8	13	30	14
27655-1610	27655-16101	16	M10	16	35	15,5
27655-1612	27655-16121	16	M12	16	35	15,5
27655-1914	27655-19141	19	M14x1,5	22	45	21,5
27655-1916	27655-19161	19	M16	22	45	21,5

Notes:

Ball studs for angle joints

DIN 71803



Material:
Steel

Surface finish:
galvanized and chromated

Sample order:
nlm 27656-1006

Note:
The ball pivots are spare parts for DIN 71802 (27650) ball joints.

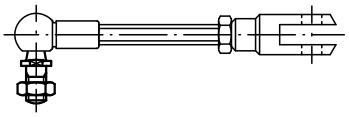

Form B
with rivet pin

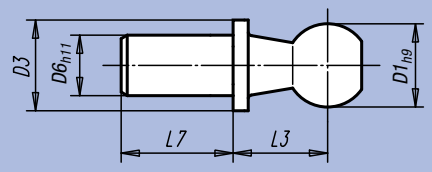

Form C
with threaded pin and SW

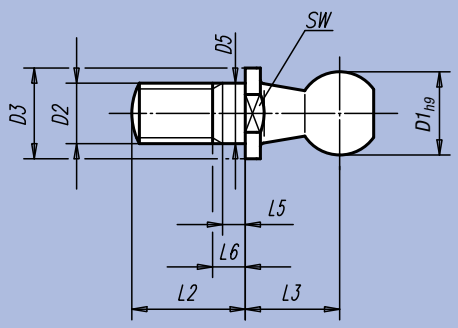

Order No.	Form	Surface finish	D1	D2	D3	D5	D6	L2	L3	L5 min.	L6 max.	L7	SW	g
27656-0840	B	short	8	-	8	-	5	-	9	-	-	4	-	3,85
27656-1045	B	short	10	-	10	-	6	-	11	-	-	4,5	-	7,10
27656-1305	B	short	13	-	13	-	8	-	13	-	-	5	-	14,20
27656-1606	B	short	16	-	16	-	10	-	16	-	-	6	-	23,50
27656-1912	B	short	19	-	19	-	14	-	20	-	-	12	-	56,20
27656-0875	B	long	8	-	8	-	5	-	9	-	-	7,5	-	4,35
27656-1080	B	long	10	-	10	-	6	-	11	-	-	8	-	7,80
27656-1310	B	long	13	-	13	-	8	-	13	-	-	10	-	16,00
27656-1613	B	long	16	-	16	-	10	-	16	-	-	13	-	29,60
27656-1918	B	long	19	-	19	-	14	-	20	-	-	18	-	63,70
27656-0805	C	-	8	M5	8	5	-	10,2	9	1,2	4	-	7	4,6
27656-1006	C	-	10	M6	10	6	-	12,5	11	1,2	4	-	8	8,5
27656-1308	C	-	13	M8	13	8	-	16,5	13	1,5	5,3	-	11	17,7
27656-1610	C	-	16	M10	16	10	-	20	16	2,5	7,3	-	13	35,1
27656-1612	C	-	16	M12	16	12	-	20	16	2,5	7,3	-	13	35,1
27656-1914	C	-	19	M14x1,5	19	14	-	28	20	5	10,8	-	16	71,2
27656-1916	C	-	19	M16	19	16	-	28	20	5	10,8	-	16	71,2

Circlips for ball seats

DIN 71805



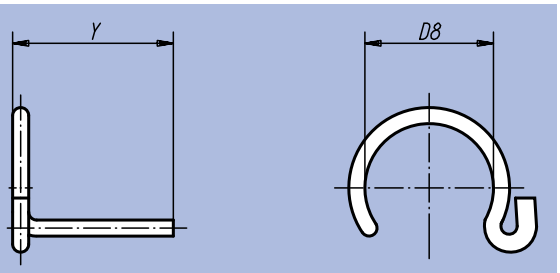

Material:
Spring steel

Surface finish:
galvanized and chromated

Sample order:
nlm 27660-08

Note:
For Ball seats DIN 71805 (27655)

Order No.	Typ	D8	Y	Suitable for ball sockets with D1
27660-08	S 8	7	12	8
27660-10	S 10	8,7	12,5	10
27660-13	S 13	11	15,7	13
27660-16	S 16	13	19	16
27660-19	S 19	20	24	19

Axial joints

similar to DIN 71802



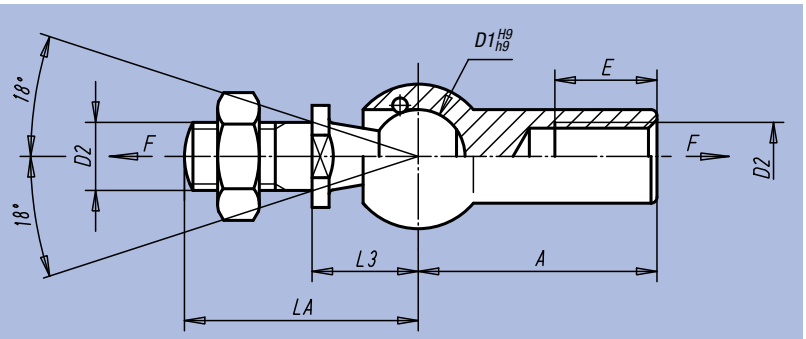

Material:
Steel

Surface finish:
galvanized and chromated

Sample order:
nlm 27665-10

Note:
Axial joints with greater extraction force and left-hand thread available on request.

Order No.	D1	D2	A	LA	L3	E	Extraction force F in N	kg
27665-08	8	M5	22	19,2	9	10,2	30	0,015
27665-10	10	M6	25	23,5	11	11,5	40	0,025
27665-13	13	M8	30	29,5	13	14	60	0,053
27665-16	16	M10	35	36	16	15,5	80	0,104
27665-19	19	M14x1,5	45	48	20	21,5	100	0,221

Height Adjustment Bolts



Material:
Steel 1.7225;
stainless steel 1.4305

Surface finish:
Steel zinc plated, blue chromated.
Stainless steel surface finish.

Sample order:
nlm 27700-01505

Note:
The height adjustment bolts are used when dealing with the positioning and alignment of motors, motor units, drive components and production lines. They are characterised by their large travel of 15 mm to 40 mm. Other sizes available on request.

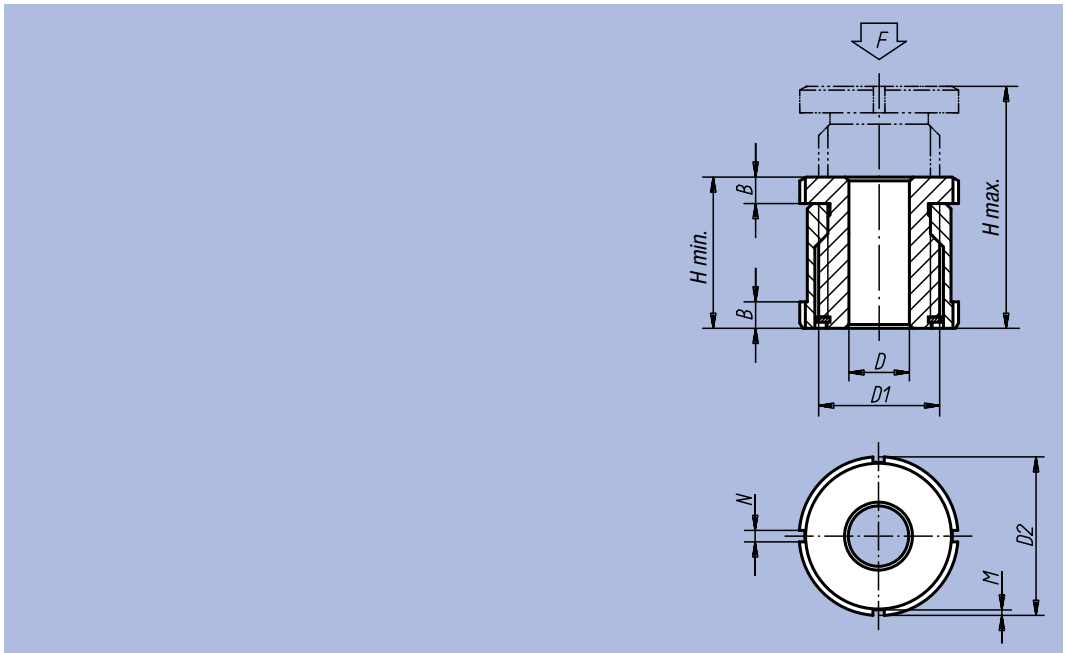

Order No.	Material	D	for screw	D1	D2	H min.	H max.	B	N	M	F kN
27700-01504	steel	4,5	M4	M15x1	25	28	43	5	4	2	40
27700-01505	steel	5,5	M5	M15x1	25	28	43	5	4	2	40
27700-01506	steel	6,6	M6	M15x1	25	28	43	5	4	2	40
27700-02006	steel	6,6	M6	M20x1	32	35	55	6	4	2	65
27700-02008	steel	9	M8	M20x1	32	35	55	6	4	2	65
27700-02010	steel	11	M10	M20x1	32	35	55	6	4	2	65
27700-02510	steel	11	M10	M30x1,5	45	42	67	7	5	2	120
27700-02512	steel	13,5	M12	M30x1,5	45	42	67	7	5	2	120
27700-02516	steel	17,5	M16	M30x1,5	45	42	67	7	5	2	120
27700-03216	steel	17,5	M16	M40x1,5	58	54	86	9	6	2,5	210
27700-03220	steel	22	M20	M40x1,5	58	54	86	9	6	2,5	210
27700-03224	steel	26	M24	M40x1,5	58	54	86	9	6	2,5	210
27700-04020	steel	22	M20	M50x1,5	70	66	106	11	6	2,5	330
27700-04024	steel	26	M24	M50x1,5	70	66	106	11	6	2,5	330
27700-04030	steel	33	M30	M50x1,5	70	66	106	11	6	2,5	330
27700-015041	stainless steel	4,5	M4	M15x1	25	28	43	5	4	2	27,1
27700-015051	stainless steel	5,5	M5	M15x1	25	28	43	5	4	2	27,1
27700-015061	stainless steel	6,6	M6	M15x1	25	28	43	5	4	2	27,1
27700-020061	stainless steel	6,6	M6	M20x1	32	35	55	6	4	2	43,4
27700-020081	stainless steel	9	M8	M20x1	32	35	55	6	4	2	43,4
27700-020101	stainless steel	11	M10	M20x1	32	35	55	6	4	2	43,4
27700-025101	stainless steel	11	M10	M30x1,5	45	42	67	7	5	2	84
27700-025121	stainless steel	13,5	M12	M30x1,5	45	42	67	7	5	2	84
27700-025161	stainless steel	17,5	M16	M30x1,5	45	42	67	7	5	2	84
27700-032161	stainless steel	17,5	M16	M40x1,5	58	54	86	9	6	2,5	148
27700-032201	stainless steel	22	M20	M40x1,5	58	54	86	9	6	2,5	148
27700-032241	stainless steel	26	M24	M40x1,5	58	54	86	9	6	2,5	148
27700-040201	stainless steel	22	M20	M50x1,5	70	66	106	11	6	2,5	225
27700-040241	stainless steel	26	M24	M50x1,5	70	66	106	11	6	2,5	225
27700-040301	stainless steel	33	M30	M50x1,5	70	66	106	11	6	2,5	225

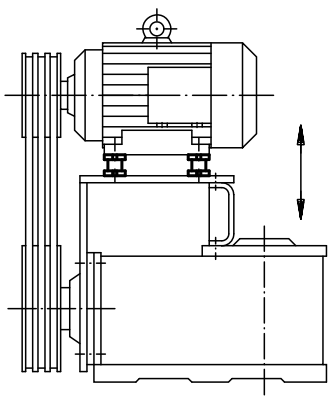

Height Adjustment Bolts with counter-nuts.



Material:
Steel 1.7225;
stainless steel 1.4305

Surface finish:
Steel zinc plated, blue chromated.
Stainless steel surface finish.

Sample order:
nlm 27701-01004

Note:
The height adjustment bolts are used when dealing with the positioning and alignment of motors, motor units, drive components and production lines. The counter-nut acts to secure the given adjustment. Other sizes available on request.

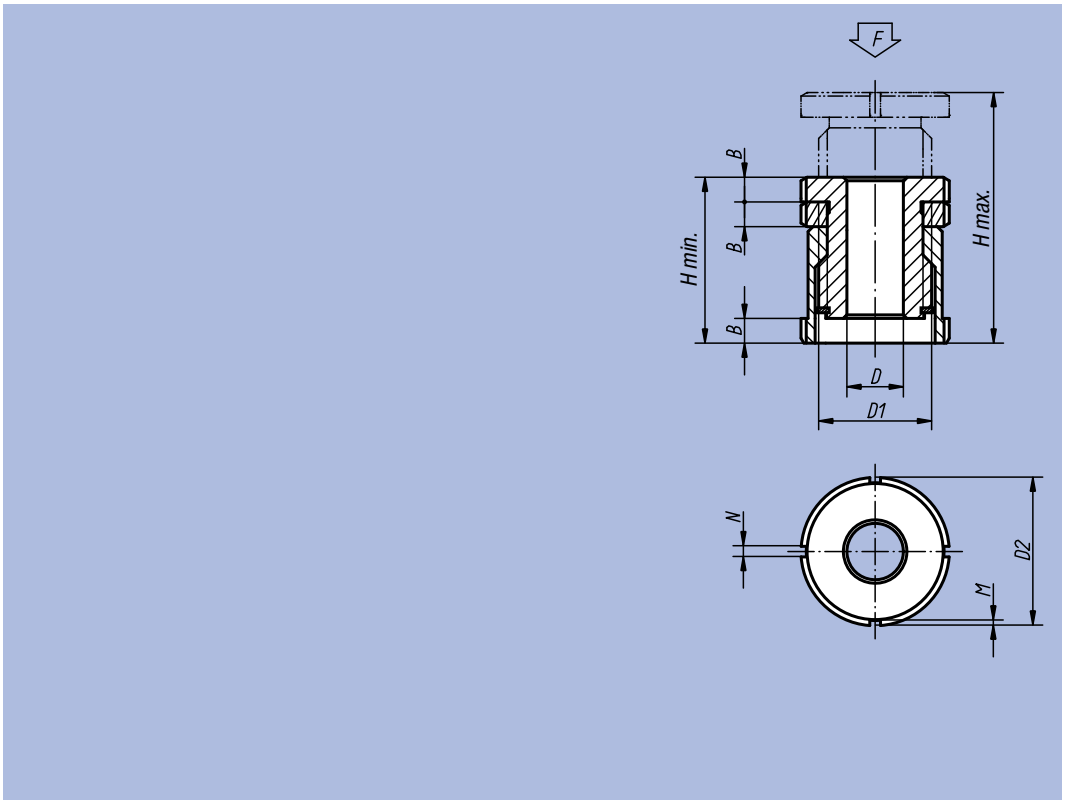

Order No.	Material	D	for screw	D1	D2	H min.	H max.	B	N	M	F kN
27701-01004	steel	4,5	M4	M15x1	25	33	43	5	4	2	40
27701-01005	steel	5,5	M5	M15x1	25	33	43	5	4	2	40
27701-01006	steel	6,6	M6	M15x1	25	33	43	5	4	2	40
27701-01406	steel	6,6	M6	M20x1	32	41	55	6	4	2	65
27701-01408	steel	9	M8	M20x1	32	41	55	6	4	2	65
27701-01410	steel	11	M10	M20x1	32	41	55	6	4	2	65
27701-01810	steel	11	M10	M30x1,5	45	49	67	7	5	2	120
27701-01812	steel	13,5	M12	M30x1,5	45	49	67	7	5	2	120
27701-01816	steel	17,5	M16	M30x1,5	45	49	67	7	5	2	120
27701-02316	steel	17,5	M16	M40x1,5	58	63	86	9	6	2,5	210
27701-02320	steel	22	M20	M40x1,5	58	63	86	9	6	2,5	210
27701-02324	steel	26	M24	M40x1,5	58	63	86	9	6	2,5	210
27701-02920	steel	22	M20	M50x1,5	70	77	106	11	6	2,5	330
27701-02924	steel	26	M24	M50x1,5	70	77	106	11	6	2,5	330
27701-02930	steel	33	M30	M50x1,5	70	77	106	11	6	2,5	330
27701-010041	stainless steel	4,5	M4	M15x1	25	33	43	5	4	2	27,1
27701-010051	stainless steel	5,5	M5	M15x1	25	33	43	5	4	2	27,1
27701-010061	stainless steel	6,6	M6	M15x1	25	33	43	5	4	2	27,1
27701-014061	stainless steel	6,6	M6	M20x1	32	41	55	6	4	2	43,4
27701-014081	stainless steel	9	M8	M20x1	32	41	55	6	4	2	43,4
27701-014101	stainless steel	11	M10	M20x1	32	41	55	6	4	2	43,4
27701-018101	stainless steel	11	M10	M30x1,5	45	49	67	7	5	2	84
27701-018121	stainless steel	13,5	M12	M30x1,5	45	49	67	7	5	2	84
27701-018161	stainless steel	17,5	M16	M30x1,5	45	49	67	7	5	2	84
27701-023161	stainless steel	17,5	M16	M40x1,5	58	63	86	9	6	2,5	148
27701-023201	stainless steel	22	M20	M40x1,5	58	63	86	9	6	2,5	148
27701-023241	stainless steel	26	M24	M40x1,5	58	63	86	9	6	2,5	148
27701-029201	stainless steel	22	M20	M50x1,5	70	77	106	11	6	2,5	225
27701-029241	stainless steel	26	M24	M50x1,5	70	77	106	11	6	2,5	225
27701-029301	stainless steel	33	M30	M50x1,5	70	77	106	11	6	2,5	225

Level-compensating components



Material:
Steel 1.7225;
stainless steel 1.4305

Surface finish:
Steel zinc plated, blue chromated.
Stainless steel surface finish.

Sample order:
nlm 27702-0404

Note:
The level-compensating bolts are used when dealing with the positioning and alignment of motors, motor units, drive components and production lines. The advantage of a level adjustment bolt is its low height. Alignments can be quickly and easily made, even if several ball-bearing positions are involved, using the level-compensating bolt. This guarantees assembly with no risk of deviation.

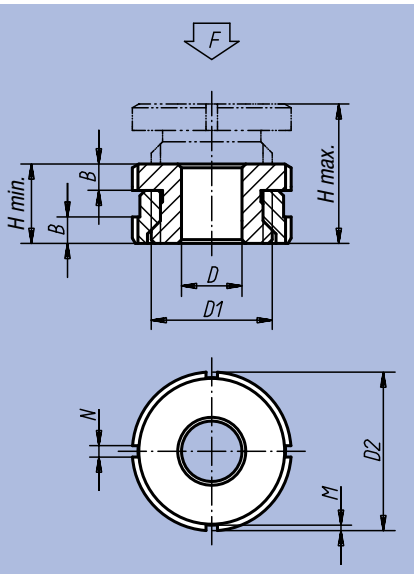

Order No.	Material	D	for screw	D1	D2	H min.	H max.	B	N	M	F kN
27702-0404	steel	4,5	M4	M15x1	25	15	19	5	4	2	40
27702-0405	steel	5,5	M5	M15x1	25	15	19	5	4	2	40
27702-0406	steel	6,6	M6	M15x1	25	15	19	5	4	2	40
27702-0506	steel	6,6	M6	M20x1	32	18	23	6	4	2	65
27702-0508	steel	9	M8	M20x1	32	18	23	6	4	2	65
27702-0510	steel	11	M10	M20x1	32	18	23	6	4	2	65
27702-0710	steel	11	M10	M30x1,5	45	22	29	7	5	2	120
27702-0712	steel	13,5	M12	M30x1,5	45	22	29	7	5	2	120
27702-0716	steel	17,5	M16	M30x1,5	45	22	29	7	5	2	120
27702-0916	steel	17,5	M16	M40x1,5	58	28	37	9	6	2,5	210
27702-0920	steel	22	M20	M40x1,5	58	28	37	9	6	2,5	210
27702-0924	steel	26	M24	M40x1,5	58	28	37	9	6	2,5	210
27702-1020	steel	22	M20	M50x1,5	70	33	43	11	6	2,5	330
27702-1024	steel	26	M24	M50x1,5	70	33	43	11	6	2,5	330
27702-1030	steel	33	M30	M50x1,5	70	33	43	11	6	2,5	330
27702-04041	stainless steel	4,5	M4	M15x1	25	15	19	5	4	2	27,1
27702-04051	stainless steel	5,5	M5	M15x1	25	15	19	5	4	2	27,1
27702-04061	stainless steel	6,6	M6	M15x1	25	15	19	5	4	2	27,1
27702-05061	stainless steel	6,6	M6	M20x1	32	18	23	6	4	2	43,4
27702-05081	stainless steel	9	M8	M20x1	32	18	23	6	4	2	43,4
27702-05101	stainless steel	11	M10	M20x1	32	18	23	6	4	2	43,4
27702-07101	stainless steel	11	M10	M30x1,5	45	22	29	7	5	2	84
27702-07121	stainless steel	13,5	M12	M30x1,5	45	22	29	7	5	2	84
27702-07161	stainless steel	17,5	M16	M30x1,5	45	22	29	7	5	2	84
27702-09161	stainless steel	17,5	M16	M40x1,5	58	28	37	9	6	2,5	148
27702-09201	stainless steel	22	M20	M40x1,5	58	28	37	9	6	2,5	148
27702-09241	stainless steel	26	M24	M40x1,5	58	28	37	9	6	2,5	148
27702-10201	stainless steel	22	M20	M50x1,5	70	33	43	11	6	2,5	225
27702-10241	stainless steel	26	M24	M50x1,5	70	33	43	11	6	2,5	225
27702-10301	stainless steel	33	M30	M50x1,5	70	33	43	11	6	2,5	225

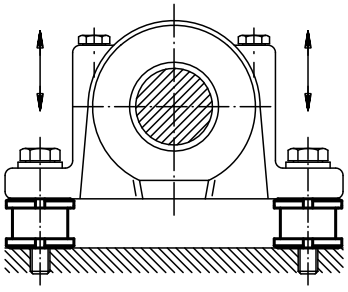

Spherical level-compensating bolts



Material:
Steel 1.7225;
stainless steel 1.4305

Surface finish:
Steel zinc plated, blue chromated.
Stainless steel surface finish.

Sample order:
nlm 27705-0406

Note:
The spherical level-compensating bolt is used when dealing with the positioning and alignment of motors, motor units, drive elements and production lines. Exact positioning in the assembly of sloped baseplates up to a 4° angle of inclination can be achieved with the spherical level-compensating bolt.

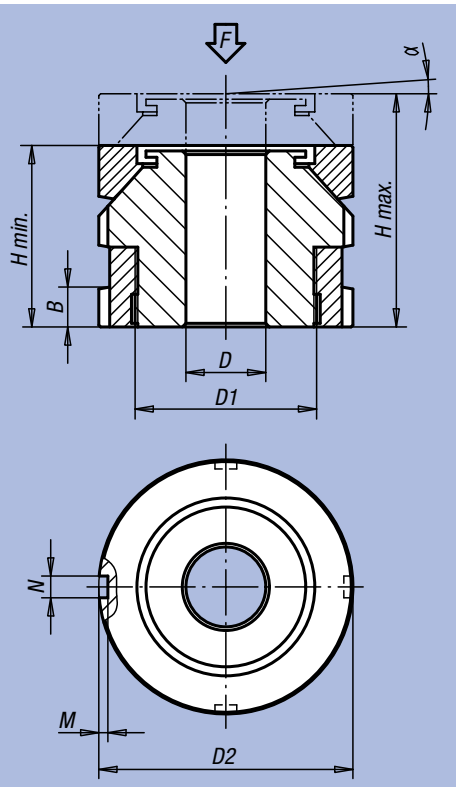

Order No.	Material	D	for screw	D1	D2	H min.	H max.	B	N	M	α	F kN
27705-0406	steel	6,6	M6	M15x1	25	22	26	5	4	2	4°	40
27705-0506	steel	6,6	M6	M20x1	32	26	31	6	4	2	4°	65
27705-0508	steel	9	M8	M20x1	32	26	31	6	4	2	4°	65
27705-0510	steel	11	M10	M20x1	32	26	31	6	4	2	4°	65
27705-0710	steel	11	M10	M30x1,5	45	34	41	7	5	2	4°	120
27705-0712	steel	13,5	M12	M30x1,5	45	34	41	7	5	2	4°	120
27705-0716	steel	17,5	M16	M30x1,5	45	34	41	7	5	2	4°	120
27705-0916	steel	17,5	M16	M40x1,5	58	44	53	9	6	2,5	4°	210
27705-0920	steel	22	M20	M40x1,5	58	44	53	9	6	2,5	4°	210
27705-0924	steel	26	M24	M40x1,5	58	44	53	9	6	2,5	4°	210
27705-1020	steel	22	M20	M50x1,5	70	50	60	11	6	2,5	4°	330
27705-1024	steel	26	M24	M50x1,5	70	50	60	11	6	2,5	4°	330
27705-1030	steel	33	M30	M50x1,5	70	50	60	11	6	2,5	4°	330
27705-1224	steel	26	M24	M60x2	80	56	68	11	7	3	4°	495
27705-1230	steel	33	M30	M60x2	80	56	68	11	7	3	4°	495
27705-04061	stainless steel	6,6	M6	M15x1	25	22	26	5	4	2	4°	27,1
27705-05061	stainless steel	6,6	M6	M20x1	32	26	31	6	4	2	4°	43,4
27705-05081	stainless steel	9	M8	M20x1	32	26	31	6	4	2	4°	43,4
27705-05101	stainless steel	11	M10	M20x1	32	26	31	6	4	2	4°	43,4
27705-07101	stainless steel	11	M10	M30x1,5	45	34	41	7	5	2	4°	84
27705-07121	stainless steel	13,5	M12	M30x1,5	45	34	41	7	5	2	4°	84
27705-07161	stainless steel	17,5	M16	M30x1,5	45	34	41	7	5	2	4°	84
27705-09161	stainless steel	17,5	M16	M40x1,5	58	44	53	9	6	2,5	4°	148
27705-09201	stainless steel	22	M20	M40x1,5	58	44	53	9	6	2,5	4°	148
27705-09241	stainless steel	26	M24	M40x1,5	58	44	53	9	6	2,5	4°	148
27705-10201	stainless steel	22	M20	M50x1,5	70	50	60	11	6	2,5	4°	225
27705-10241	stainless steel	26	M24	M50x1,5	70	50	60	11	6	2,5	4°	225
27705-10301	stainless steel	33	M30	M50x1,5	70	50	60	11	6	2,5	4°	225
27705-12241	stainless steel	26	M24	M60x2	80	56	68	11	7	3	4°	323
27705-12301	stainless steel	33	M30	M60x2	80	56	68	11	7	3	4°	323

Cap elements

Type H2



Material, surface finish:
Metal parts, galvanized steel, strength 5.6.
Elastomer, natural rubber, hardness 40° or 60° Shore A.

Sample order:
nlm 27750-03502040

Note:
The cap elements are highly elastic both in the radial and in the axial direction and therefore offer an outstanding impact isolation.
The special shaping of the cap elements allows isolation of sound and vibrations of machines and assemblies with a low natural frequency. They are especially
suitable for supporting delicate measurements and small devices.

The elements must not be subjected to tensile stress.

Temperature resistant
-30°C up to +80°C.

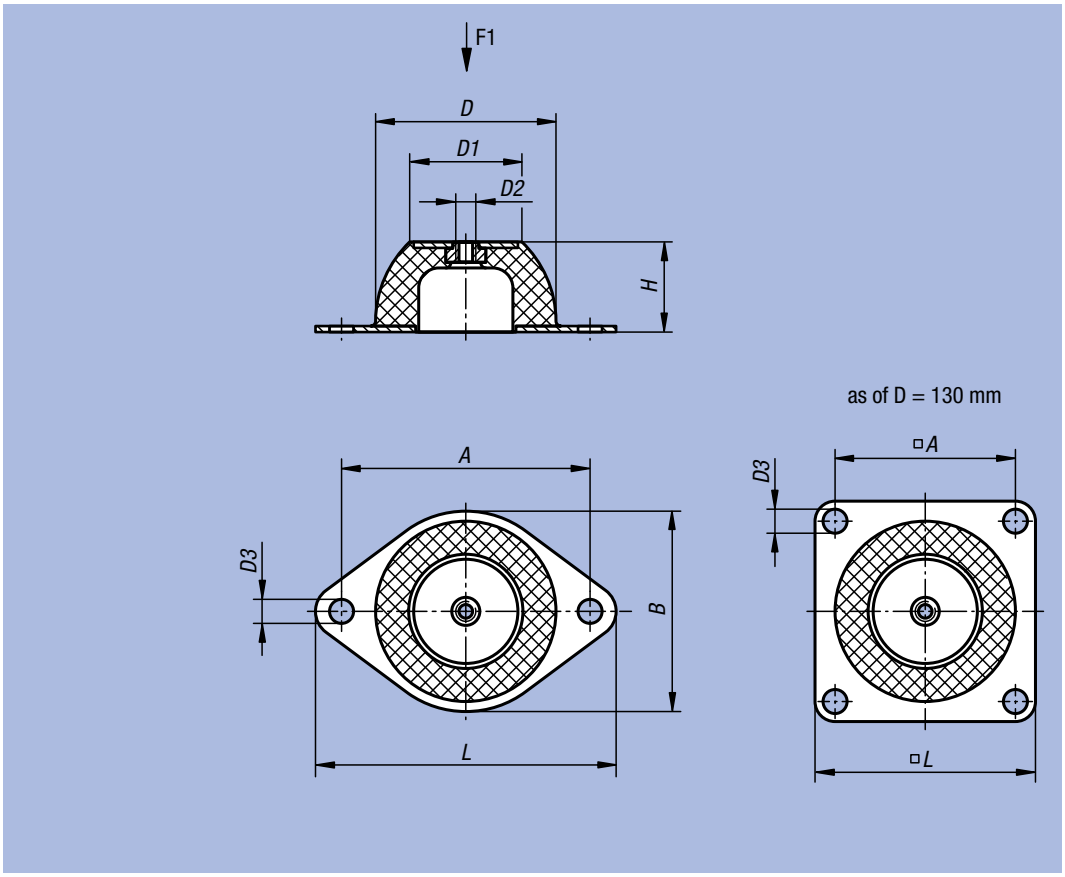

Order No.	Surface finish	A	B	D	D1	D2	D3	H	L	F1 N	□ kg
27750-03502040	Hardness 40° Shore A	50	43	35	18	M6	7	20	64	34	0,030
27750-05002540	Hardness 40° Shore A	66	56	50	33	M8	8	25	85	200	0,067
27750-07003540	Hardness 40° Shore A	92	76	70	45	M10	10	35	114	390	0,148
27750-08504040	Hardness 40° Shore A	110	96	85	53	M10	11,5	40	136	680	0,250
27750-09004540	Hardness 40° Shore A	124	101	90	58	M10	11,5	45	151	1280	0,390
27750-13006340	Hardness 40° Shore A	120	-	130	78	M12	14,5	63	150	2700	1,020
27750-18008540	Hardness 40° Shore A	160	-	180	100	M16	14,5	85	200	3700	2,200
27750-03502060	Hardness 60° Shore A	50	43	35	18	M6	7	20	64	90	0,030
27750-05002560	Hardness 60° Shore A	66	56	50	33	M8	8	25	85	490	0,067
27750-07003560	Hardness 60° Shore A	92	76	70	45	M10	10	35	114	780	0,148
27750-08504060	Hardness 60° Shore A	110	96	85	53	M10	11,5	40	136	1450	0,264
27750-09004560	Hardness 60° Shore A	124	101	90	58	M10	11,5	45	151	2150	0,416
27750-13006360	Hardness 60° Shore A	120	-	130	78	M12	14,5	63	150	4900	1,085
27750-18008560	Hardness 60° Shore A	160	-	180	100	M16	14,5	85	200	7350	2,300

Machine feet



Material, surface finish:
Metal parts, galvanized steel, strength 5.6.
Elastomer, natural rubber
Average hardness, 60° Shore

Sample order:
nlm 27760-062055

Note:
Machine feet are proven, universally usable elements for elastically supporting machines of every type. Wherever large horizontal movements are to be avoided, machine feet are commonly used. Their horizontal rigidity is higher in all directions than their vertical rigidity. If properly used, they provide excellent prevention against the conduction of shocks and noise.

Especially for situations in which tensile forces are to be expected (e.g., in shipbuilding), machine feet with tear protection are recommended.

The indicated load data are standard values for a static long-term load with a rubber hardness of 60° Shore A.

On request:
Machine feet with a rubber hardness of 40° or 70° Shore A.

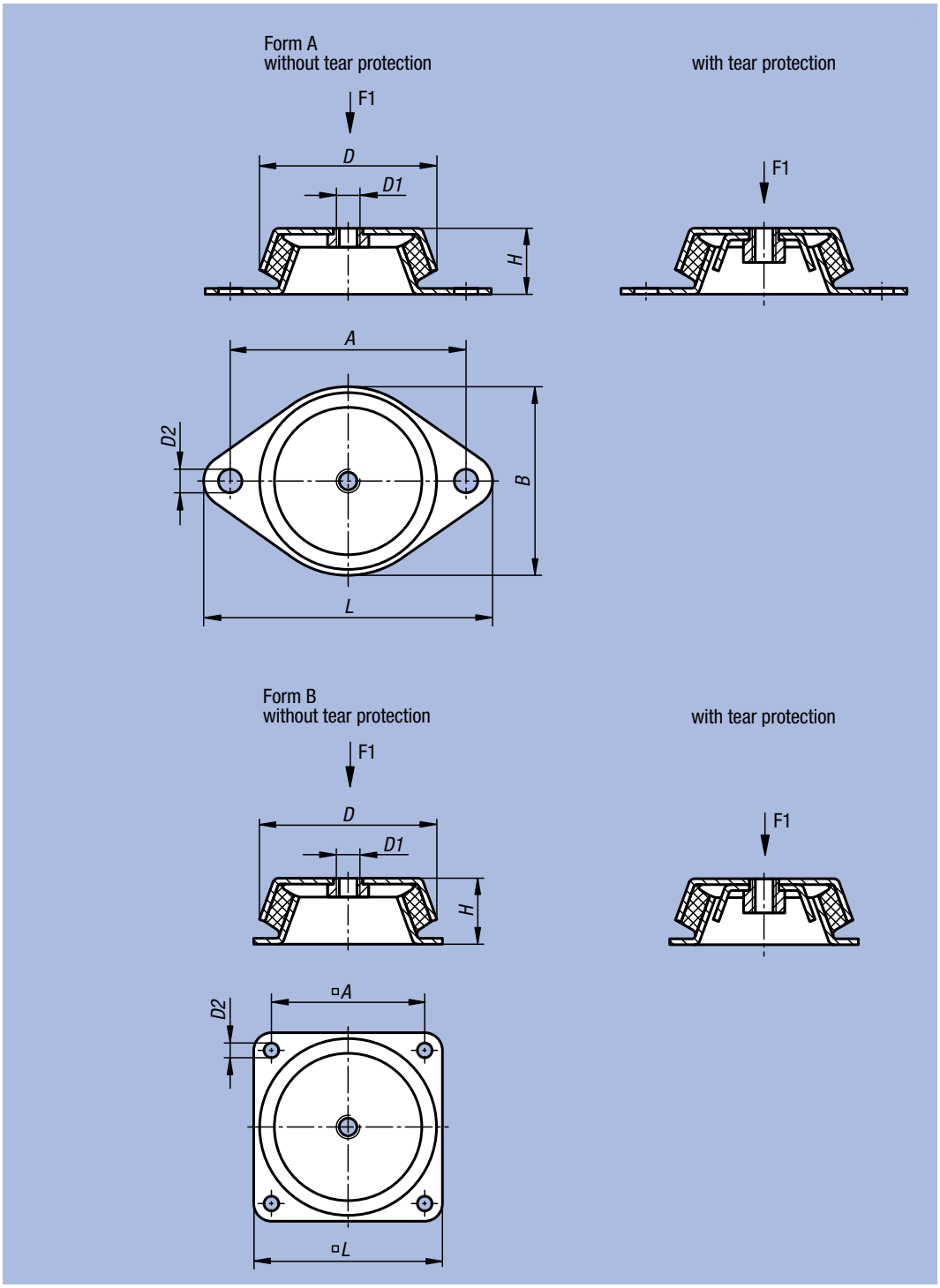

Order No. Surface finish without tear protection	Order No. Surface finish with tear protection	Form	A	B	D	D1	D2	H	L	F1 (N)
27760-062060	27760-062160	A	85	66	62	M10	8,2	30	110	1500
27760-078060	27760-078160	A	110	78	78	M10	9,0	30	128	1800
27760-092060	27760-092160	A	110	96	92	M12	10,2	45	140	3000
27760-106060	27760-106160	A	140	110	106	M12	12,4	39	170	3600
27760-150060	27760-150160	B	132	-	150	M16	12,5	51	168	8000

Notes:

Modular Structure of a Swivel Pad

Application:
Swivel Pads are built up in modular fashion. The components can be combined individually to match the application.
The swivel pads are therefore used for a wide range of machines and installations, including office furniture.

Modular structure:
The swivel pads consist of two components - a plate and a threaded spindle resp. a ball joint. **Any** plate can be combined with **any** threaded spindle resp. **any** ball joint (see figure 1).

Assembly:
Using a plastic hammer, knock the ball of the threaded spindle resp. the ball joint vertically into the swivel pad plate.
If necessary, the two fastening holes (closed) in the swivel pad plate can be opened by simply punching them out to allow the swivel pad to be mounted to the ground.

Height of Swivel Pad:
Swivel Pads always have a minimum height of H = 22,5 mm independently of the plate or threaded spindle or ball joint size (see figure 2).
When assembling with threaded spindle, the height of the complete swivel pad is calculated by adding 22,5 mm to the length of the threaded spindle, and the height of the hexagon. (Total height swivel pad = L + L1 + 22,5 mm)

When assembling with ball joint, the length L is void.

Note for ordering:
If the swivel pad plate and the threaded spindle resp. the ball joint are to be supplied assembled, please add the suffix **„assembled“** to the order number for the plate and the spindle resp. the ball joint (see sample order on the relevant product page).

Figure 1

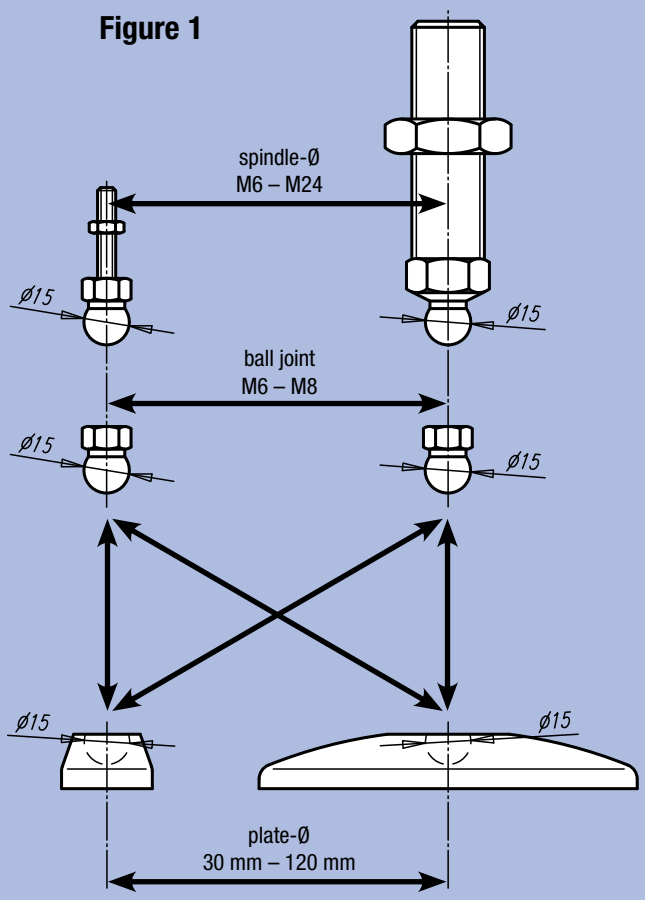

Figure 2

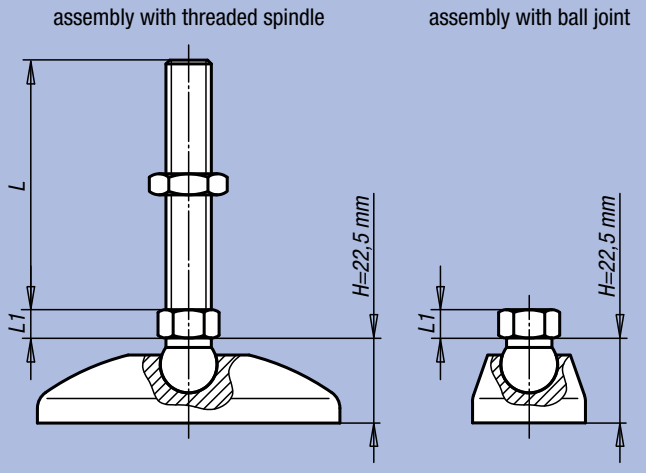

Inclination angle of threaded spindle resp. ball joint:

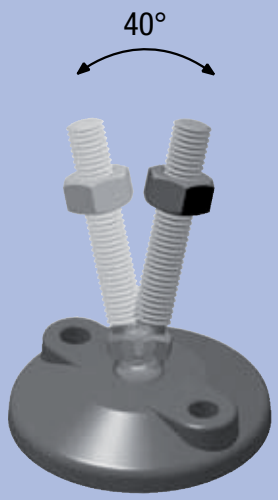

Plates for Swivel Pads

in plastic



Material:
Plates, thermoplastic, glass-fibre reinforced.
Anti-slip-plate in thermoplastic elastomer

Surface finish:
Black

Sample order:
nlm 27800-1030
nlm 27800-1030 and 27810-060151 **assembled**

Ordering example:
If the Swivel Pad plate and the threaded spindle resp. the ball joint are to be supplied assembled, please add the suffix **„assembled“** to the order number for the plate and the spindle resp. the ball joint.
(e.g. 27800-1030 and 27810-060151 **assembled**.)

Note:
Swivel Pads consist of a plate and a threaded spindle resp. a ball joint. Any plate can be combined with any threaded spindle resp. any ball joint. The Anti-Slip-Plate absorbs vibrations and prevents slipping of the Swivel Pad.
For matching threaded spindles see 27810.
For matching ball joints see 27811.

Form A
without screw-on hole
without anti-slip-plate

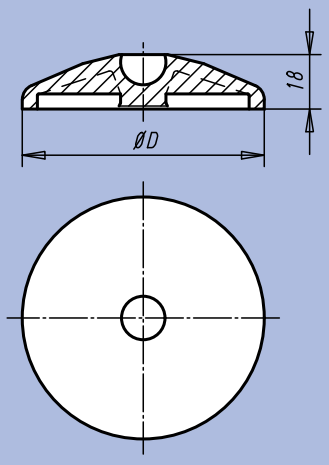

Form B
without screw-on hole
with anti-slip-plate

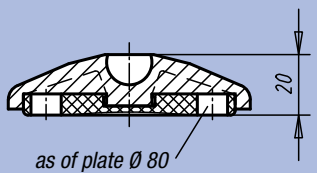

Form C
with screw-on hole (closed)
without anti-slip-plate

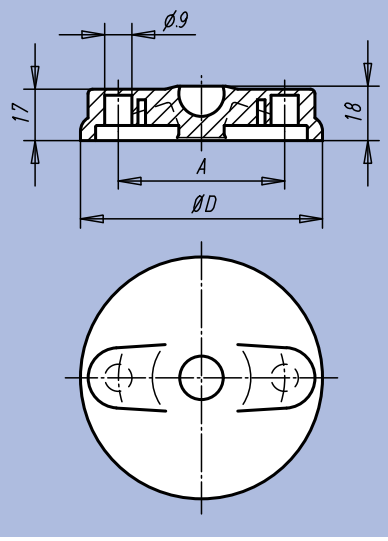

Form D
with screw-on hole (closed)
with anti-slip-plate

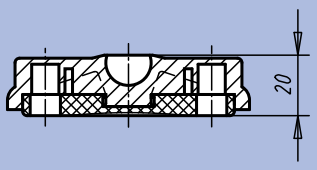

Order No. Form A	Order No. Form B	D	Load capacity max. kN
27800-1030	27800-2030	30	5
27800-1040	27800-2040	40	9
27800-1045	27800-2045	45	9
27800-1050	27800-2050	50	9
27800-1060	27800-2060	60	9
27800-1080	27800-2080	80	9
27800-1100	27800-2100	100	9

Order No. Form C	Order No. Form D	D	A	Load capacity max. kN
27800-3080	27800-4080	80	55	9
27800-3100	27800-4100	100	74	9
27800-3120	27800-4120	120	94	9

Plates for Swivel Pads

in die cast zinc or stainless steel



Material:
Plate in die cast zinc or stainless steel 1.4305, anti-slip-plate in thermoplastic elastomer

Surface finish:
Plate in die cast zinc, black powder-coated;
plate in stainless steel, natural finish

Sample order:
nlm 27801-10301
nlm 27801-10301 and 27810-060151 **assembled**

Ordering example:
If the Swivel Pad plate and the threaded spindle resp. the ball joint are to be supplied assembled, please add the suffix **„assembled“** to the order number for the plate and the spindle resp. the ball joint.
(e.g. 27801-10301 and 27810-060151 **assembled**).

Note:
Swivel Pads consist of a plate and a threaded spindle resp. a ball joint. Any plate can be combined with any threaded spindle resp. any ball joint. The Anti-Slip-Plate absorbs vibrations and prevents slipping of the Swivel Pad.
For matching threaded spindles see 27810.
For matching ball joints see 27811.

Form A
without screw-on hole
without anti-slip-plate

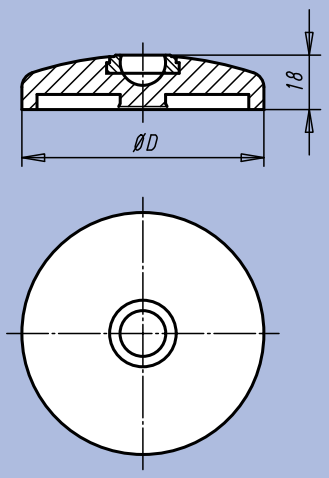

Form B
without screw-on hole
with anti-slip-plate

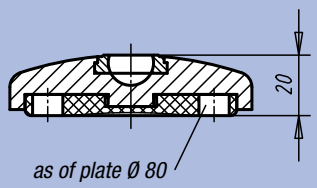

Form C
with screw-on hole (open)
without anti-slip-plate

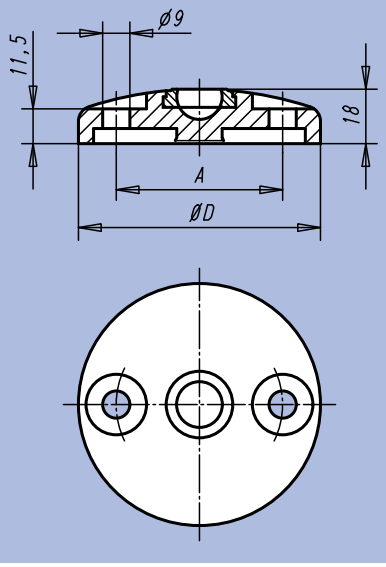

Form D
with screw-on hole (open)
with anti-slip-plate

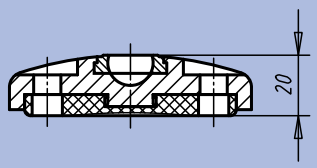

Plates for Swivel Pads

in die cast zinc or stainless steel

Order No. Form A	Order No. Form B	Material	D	Load capacity max. kN
27801-10301	27801-20301	die cast zinc	30	20
27801-10401	27801-20401	die cast zinc	40	30
27801-10451	27801-20451	die cast zinc	45	30
27801-10501	27801-20501	die cast zinc	50	30
27801-10601	27801-20601	die cast zinc	60	30
27801-10801	27801-20801	die cast zinc	80	30
27801-11001	27801-21001	die cast zinc	100	35
27801-11201	27801-21201	die cast zinc	120	35

Order No. Form C	Order No. Form D	Material	D	A	Load capacity max. kN
27801-30801	27801-40801	die cast zinc	80	55	30
27801-31001	27801-41001	die cast zinc	100	74	35
27801-31201	27801-41201	die cast zinc	120	94	35

Order No. Form A	Order No. Form B	Material	D	Load capacity max. kN
27801-10302	27801-20302	stainless steel	30	20
27801-10402	27801-20402	stainless steel	40	30
27801-10452	27801-20452	stainless steel	45	30
27801-10502	27801-20502	stainless steel	50	35
27801-10602	27801-20602	stainless steel	60	35
27801-10802	27801-20802	stainless steel	80	35
27801-11002	27801-21002	stainless steel	100	40
27801-11202	27801-21202	stainless steel	120	40

Order No. Form C	Order No. Form D	Material	D	A	Load capacity max. kN
27801-30802	27801-40802	stainless steel	80	55	35
27801-31002	27801-41002	stainless steel	100	74	40
27801-31202	27801-41202	stainless steel	120	94	40

Extended Plates for Swivel Pads

in die cast zinc



Material:
Plate in die cast zinc,
anti-slip-plate in thermoplastic elastomer

Surface finish:
Plate black powder-coated

Sample order:
nlm 27802-30801
nlm 27802-30801 and 27810-060151 **assembled**

Ordering example:
If the Swivel Pad plate and the threaded spindle resp. the ball joint are to be supplied assembled, please add the suffix **„assembled“** to the order number for the plate and the spindle resp. the ball joint.
(e.g. 27802-30801 and 27810-060151 **assembled**.)

Note:
Swivel Pads consist of a plate and a threaded spindle resp. a ball joint. Any plate can be combined with any threaded spindle resp. any ball joint. The Anti-Slip-Plate absorbs vibrations and prevents slipping of the Swivel Pad.
For matching threaded spindles see 27810.
For matching ball joints see 27811.

Form C
with screw-on hole
without anti-slip-plate

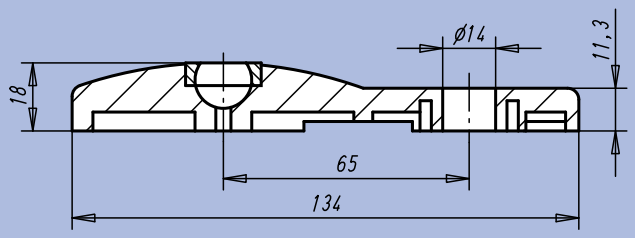

Form D
with screw-on hole
with anti-slip-plate

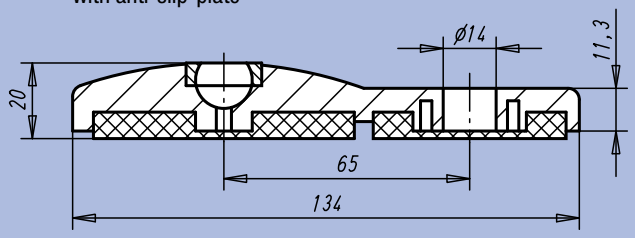

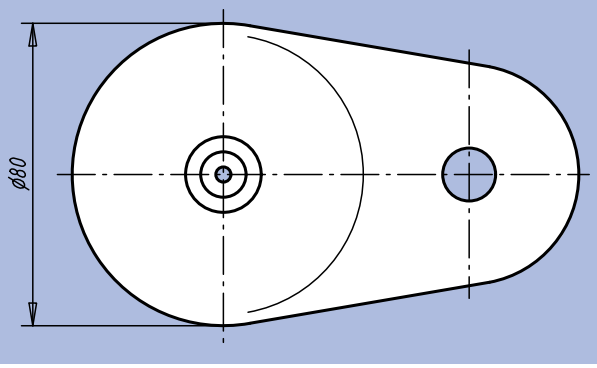

Order No.	Form	Load capacity max. kN	kg
27802-30801	C	30	0,399
27802-40801	D	30	0,434

Plates for Swivel Pads

in stainless steel



Material:
Plates, stainless steel 1.4301.
Core, thermoplastic PA.
Rubber support TPE.

Surface finish:
Plate natural finish;
light grey rubber support with sealing lip, hardness 70 Shore A;
range of use from -20 °C to +100 °C

Sample order:
nlm 27803-1060
nlm 27803-1060 and 27810-060152 **assembled**

Ordering example:
If the Swivel Pad plate and the threaded spindle resp. the ball joint are to be supplied assembled, please add the suffix **„assembled“** to the order number for the plate and the spindle resp. the ball joint.
(e.g. 27803-1060 and 27810-060152 **assembled**.)

Note:
The stainless steel plates excel in that the rubber support combined with the stainless steel plates and the PA core is sprayed. The rubber support is resistant to oil and water (up to 60 °C). In addition, it is furnished with antibacterial and antimicrobial protection and is thus outstandingly suited for sectors in the foods industry. Swivel Pads consist of a plate and a threaded spindle resp. a ball joint. Any plate can be combined with any threaded spindle resp. any ball joint. For matching threaded spindles see 27810.
For matching ball joints see 27811.



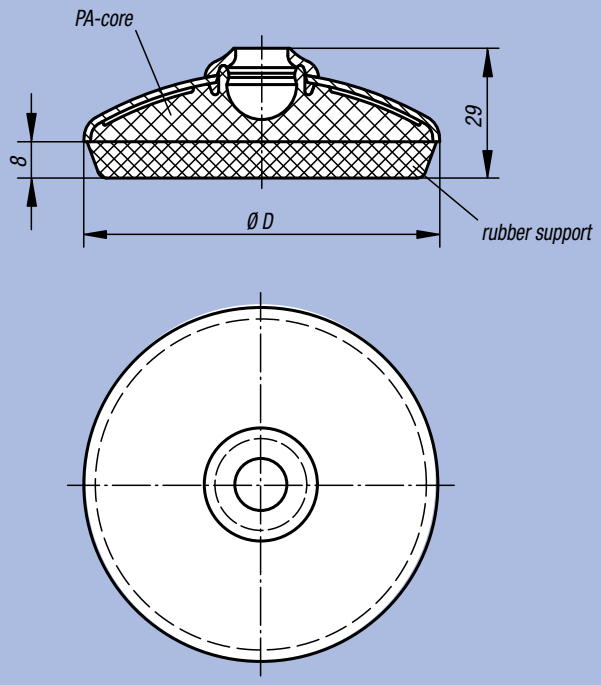

Order No.	D	Load capacity max kN	kg
27803-1060	58,5	7	0,075
27803-1080	78,5	7	0,150
27803-1100	98,5	7	0,220

Technical Information for Swivel Pads and Swivel Feet with vibration absorption

Natural frequency:
Every sprung weight, such as for instance a machine or piece of equipment, that is standing on swivel pads with vibration absorbers vibrates after an initial impetus at its own natural frequency (resonance frequency). In the diagram to the side (figure 1) the natural frequency of Sylomer V12 under pressure from various forces can be read. The optimum range of use is with a pressure of ≤0.4 N/mm². A maximum pressure of 0.6 N/mm² should not be exceeded.

Interference frequency:
The frequency emitted by a machine or a piece of equipment is known as its interference frequency.
Effective vibration absorption is dependent on the interference frequency (the frequency to be absorbed) and the natural frequecy of the absorption unit. The greater the difference in frequency between the natural frequency and the interference frequency, the better the absorption. An absorbing effect will only be achieved if the interference frequency is over √2 times the natural frequency of the absorption unit.

Calculation example:
Swivel foot: M12, D1 = 30.5
Load capacity: 300 N

Pressure:

$$\frac{F}{A} = \frac{300\ N}{529.5\ mm^2} = 0.57\ N/mm^2$$

$$> 0.4\ N/mm^2$$

Swivel foot: M16, D1 = 40.5
Load capacity: 300 N

Pressure:

$$\frac{F}{A} = \frac{300\ N}{1087.2\ mm^2} = \mathbf{0.28\ N/mm^2}$$

$$< 0.4\ N/mm^2$$

The M16 swivel foot is chosen since the pressure is ≤0.4 N/mm².

From Figure 1, pressure of **0.28 N/mm²** gives a natural frequency of **21 Hz** for this.

With an interference frequency of **44 Hz** an absorption effect of 69% is achieved (figure 2).

Figure 1

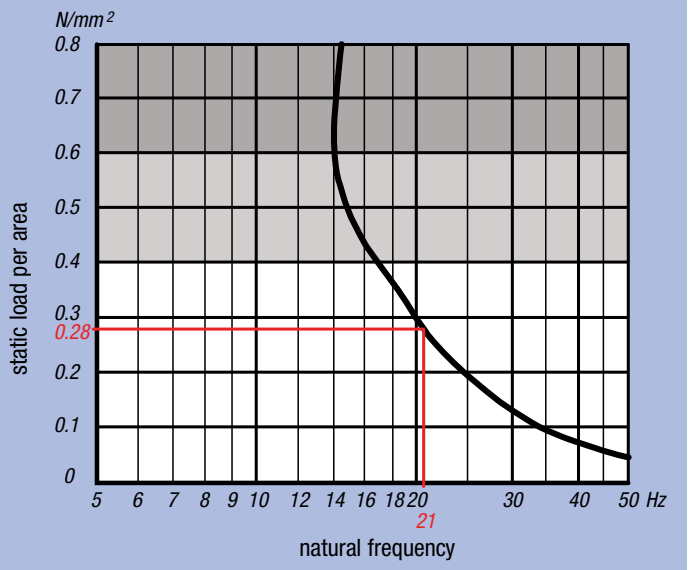

Figure 2

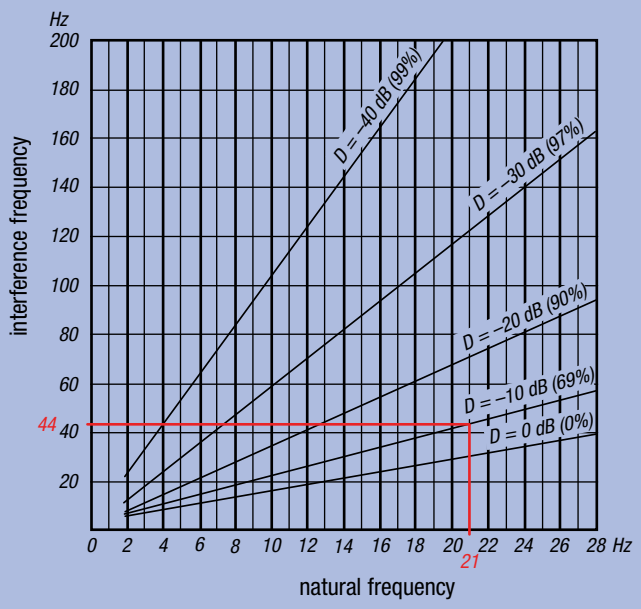

Plates for Swivel Pads

with vibration absorption



Material:
Plate in die cast zinc or stainless steel 1.4305, damper plate PUR elastomere (Sylomer V12)

Surface finish:
Plate in die cast zinc, black powder-coated; plate in stainless steel, natural finish; damper plate grey, fixed, cannot slip;
range of use from -30 °C to +70 °C

Sample order:
nlm 27804-20601
nlm 27804-20601 and 27810-060151 **assembled**

Ordering example:
If the Swivel Pad plate and the threaded spindle resp. the ball joint are to be supplied **assembled**, please add the suffix **„assembled“** to the order number for the plate and the spindle resp. the ball joint.
(e.g. 27804-20601 and 27810-060151 **assembled**.)

Note:
The manageable load given in the table is a recommendation of the **permanent static** load up to which the absorption unit should be used. This static load corresponds to a pressure per area of 0.4 N/mm², at which the material reaches its optimum absorption properties. Here it is taken into account that under dynamic demands an additional load, up to 0.6 N/mm² may occur.
The damper plate absorbs vibrations and prevents slipping of the Swivel Pad.

Swivel Pads consist of a plate and a threaded spindle resp. a ball joint. Any plate can be combined with any threaded spindle resp. any ball joint.
For matching threaded spindles see 27810.
For matching ball joints see 27811.

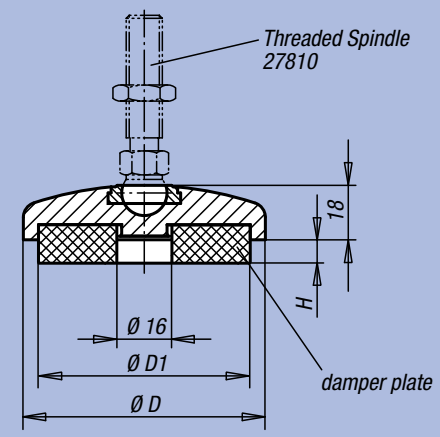

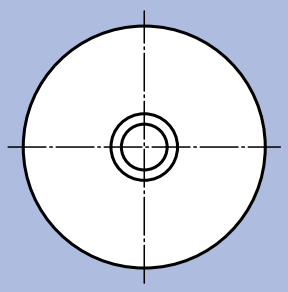

Order No.	Material	D	D1	H (under pressure of 0 / 0.4 / 0.6 N/mm²)	Load capacity (under pressure of 0.4 N/mm²) N
27804-20401	die cast zinc	40	30,5	7 / 5,9 / 4,8	62
27804-20501	die cast zinc	50	40,5	7 / 5,9 / 4,8	212
27804-20601	die cast zinc	60	50	7 / 5,9 / 4,8	433
27804-20801	die cast zinc	80	68	7 / 5,9 / 4,8	614
27804-20402	stainless steel	40	30,5	7 / 5,8 / 4,9	212
27804-20502	stainless steel	50	40,5	7 / 5,8 / 4,9	435
27804-20602	stainless steel	60	50	7 / 5,8 / 4,9	705
27804-20802	stainless steel	80	68	7 / 5,8 / 4,9	1372

Swivel Feet

with vibration absorption



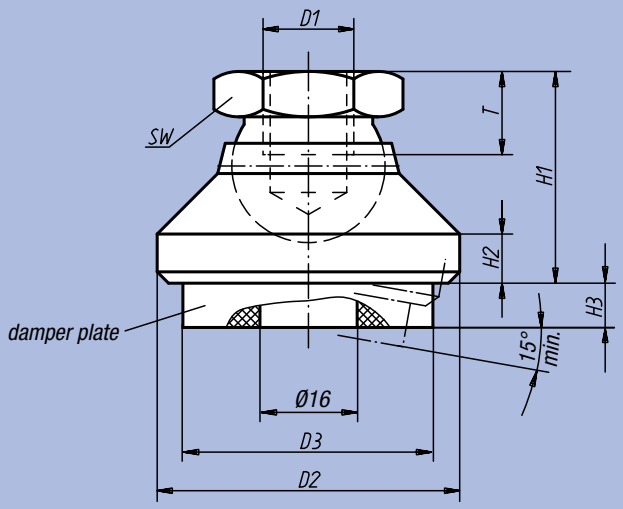

Material:
- Steel version:
  pressure foot in tempered steel; ball element in case-hardened free-cutting steel
- Stainless steel version:
  pressure foot and ball element in stainless steel

Damper plate PUR elastomere (Sylomer V12)

Surface finish:
- Steel version:
  pressure foot black oxide finish; ball element case-hardened, black oxide finish
- Stainless steel version:
  natural finish

Damper plate PUR elastomere, grey, fixed, cannot slip;
range of use from -30 °C to +70 °C

Sample order:
nlm 27806-110

Note:
The manageable load given in the table is a recommendation of the **permanent static** load up to which the absorption unit should be used. This static load corresponds to a pressure per area of 0.4 N/mm², at which the material reaches its optimum absorption properties. Here it is taken into account that under dynamic demands an additional load, up to 0.6 N/mm² may occur.
The damper plate absorbs vibrations and prevents slipping of the Swivel Foot.
Swivel Foot (without vibration absorption) see 07144.

Order No.	Material	D1	D2	D3	H1	H2	H3 (under pressure of 0 / 0.4 / 0.6 N/mm²)	T	SW	Load capacity (under pressure of 0.4 N/mm²) N
27806-110	steel	M10	32	30,5	22	5	8 / 6,8 / 5,9	10	17	212
27806-112	steel	M12	40	30,5	26	6	8 / 6,8 / 5,9	12	19	212
27806-116	steel	M16	50	40,5	32	7	8 / 6,8 / 5,9	14	24	435
27806-120	steel	M20	60	50	42	8	8 / 6,8 / 5,9	18	30	705
27806-310	stainless steel	M10	32	30,5	22	5	8 / 6,8 / 5,9	10	17	212
27806-312	stainless steel	M12	40	30,5	26	6	8 / 6,8 / 5,9	12	19	212
27806-316	stainless steel	M16	50	40,5	32	7	8 / 6,8 / 5,9	14	24	435
27806-320	stainless steel	M20	60	50	42	8	8 / 6,8 / 5,9	18	30	705

Locating Feet

with vibration absorption



Material:
Plate steel, damper plate PUR elastomere (Sylomer V12)

Surface finish:
Plate blue chromated;
damper plate grey, fixed, cannot slip;
range of use from -30 °C to +70 °C

Sample order:
nlm 27808-046

Note:
The manageable load given in the table is a recommendation of the **permanent static** load up to which the absorption unit should be used. This static load corresponds to a pressure per area of 0.4 N/mm², at which the material reaches its optimum absorption properties. Here it is taken into account that under dynamic demands an additional load, up to 0.6 N/mm² may occur.
The damper plate absorbs vibrations and prevents slipping of the Locating Foot.

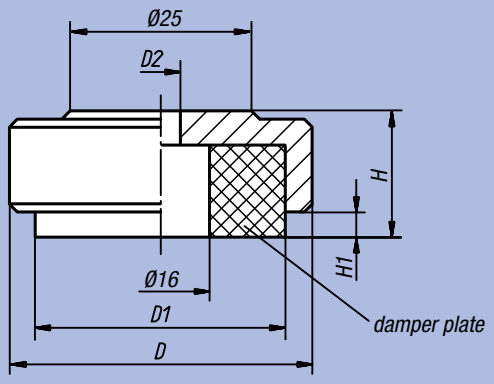

Order No.	D	D1	D2	H	H1 (under pressure of 0 / 0.4 / 0.6 N/mm²)	Load capacity (under pressure of 0.4 N/mm²) N
27808-036	36	30,5	5,5	15	4 / 2,8 / 1,9	212
27808-046	46	40,5	6,6	17	4 / 2,8 / 1,9	435
27808-056	56	50	9	19	4 / 2,8 / 1,9	705
27808-074	74	68	9	21	4 / 2,8 / 1,9	1372

Threaded Spindles for Swivel Pads

in steel or stainless steel



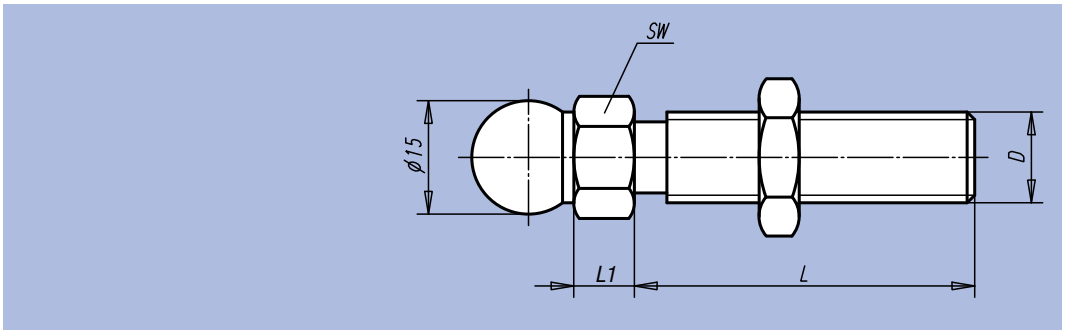

Material:
Steel or stainless steel 1.4301

Surface finish:
Steel blue chromated;
stainless steel, natural finish

Sample order:
nlm 27810-060151
nlm 27810-060151 and 27800-1030 **assembled**

Ordering example:
If the Threaded Spindle and the swivel pad plate are to be supplied assembled, please add the suffix **„assembled“** to the order number for the spindle and plate.
(e.g. 27810-060151 and 27800-1030 **assembled**.)

Note:
Swivel Pads consist of a plate and a threaded spindle. Any plate can be combined with any threaded spindle. The height of the complete Swivel Pad is calculated from the length of the threaded spindle + height of hexagon + 22,5 mm.
(Overall height of Swivel Pad = L + L1 + 22,5 mm)

Order No. Material steel	Order No. Material stainless steel	D	L	L1	SW	Load capacity max. kN	□ kg
27810-060151	27810-060152	M6	15	7,5	14	2	0,009
27810-060301	27810-060302	M6	30	7,5	14	2	0,011
27810-080401	27810-080402	M8	40	7,5	14	3,5	0,036
27810-080801	27810-080802	M8	80	7,5	14	3,5	0,049
27810-100451	27810-100452	M10	45	7,5	14	4,7	0,045
27810-100701	27810-100702	M10	70	7,5	14	4,7	0,055
27810-100901	27810-100902	M10	90	7,5	14	4,7	0,068
27810-101251	27810-101252	M10	125	7,5	14	4,7	0,084
27810-101501	27810-101502	M10	150	7,5	14	4,7	0,092
27810-120451	27810-120452	M12	45	7,5	14	7,7	0,055
27810-120661	27810-120662	M12	66	7,5	14	7,7	0,070
27810-121001	27810-121002	M12	100	7,5	14	7,7	0,094
27810-121251	27810-121252	M12	125	7,5	14	7,7	0,112
27810-121501	27810-121502	M12	150	7,5	14	7,7	0,130
27810-140661	27810-140662	M14	66	7,5	14	11,1	0,085
27810-141001	27810-141002	M14	100	7,5	14	11,1	0,119
27810-141251	27810-141252	M14	125	7,5	14	11,1	0,138
27810-141501	27810-141502	M14	150	7,5	14	11,1	0,166
27810-160661	27810-160662	M16	66	7,5	17	14,5	0,112
27810-161001	27810-161002	M16	100	7,5	17	14,5	0,156
27810-161251	27810-161252	M16	125	7,5	17	14,5	0,190
27810-161501	27810-161502	M16	150	7,5	17	14,5	0,222
27810-162001	27810-162002	M16	200	7,5	17	14,5	0,285
27810-200851	27810-200852	M20	85	10,5	22	24,3	0,208
27810-201001	27810-201002	M20	100	10,5	22	24,3	0,237
27810-201251	27810-201252	M20	125	10,5	22	24,3	0,297
27810-201501	27810-201502	M20	150	10,5	22	24,3	0,341
27810-202001	27810-202002	M20	200	10,5	22	24,3	0,447
27810-240851	27810-240852	M24	85	10,5	24	36,1	0,293
27810-241001	27810-241002	M24	100	10,5	24	36,1	0,336
27810-241251	27810-241252	M24	125	10,5	24	36,1	0,408
27810-241501	27810-241502	M24	150	10,5	24	36,1	0,483
27810-242001	27810-242002	M24	200	10,5	24	36,1	0,633



Ball Joints

with internal thread



Material:
Steel or stainless steel 1.4301.

Surface finish:
Steel blue chromated;
stainless steel, natural finish

Sample order:
nlm 27811-061
nlm 27811-061 and 27800-1030 **assembled**

Ordering example:
If the Ball Joint and the Swivel Pad plate are to be supplied assembled, please add the suffix **„assembled“** to the order number for the ball joint and plate.
(e.g. 27811-061 and 27800-1030 **assembled**.)

Note:
For direct fastening of swivel pads by standard screws.

Swivel Pads consist of a ball joint and a plate. Any ball joint can be combined with any plate.
The height of the complete Swivel Pad is calculated from the height of hexagon + 22,5 mm.
(Overall height of Swivel Pad = L1 + 22,5 mm)



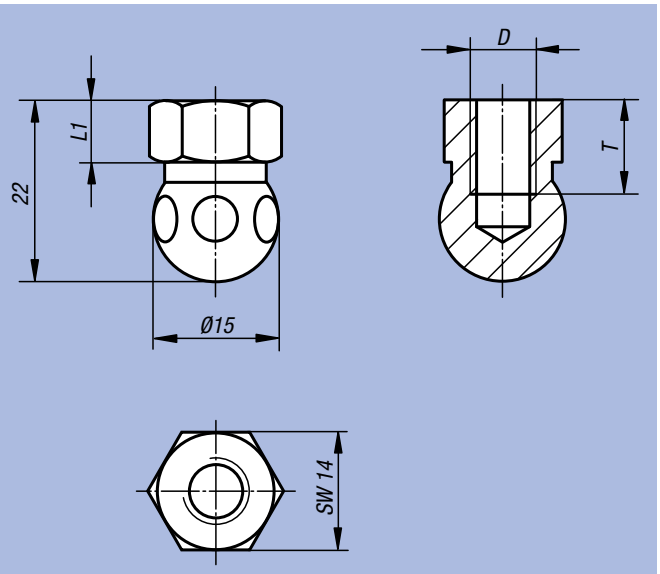

Order No.	Material	D	L1	T	kg
27811-061	steel	M6	7,5	10	0,020
27811-062	stainless steel	M6	7,5	10	0,020
27811-081	steel	M8	7,5	10	0,020
27811-082	stainless steel	M8	7,5	10	0,020

Modular Structure of a Swivel Foot

Application:
Swivel Feet are built up in modular fashion. The components can be combined individually to match the application.
The swivel feet are therefore used for a wide range of machines and installations, including office furniture.

Modular structure:
The swivel feet consist of two components - a plate and a threaded spindle. **Any** plate can be combined with **any** threaded spindle (see figure 1).

Assembly:
Insert the threaded spindle vertically into the swivel foot plate and fasten it from the bottom of the swivel foot plate with a spacer ring, washer and bolt (thus unintentional release of threaded spindle from plate not possible).
If necessary, the two fastening holes (closed) in the swivel foot plate can be opened by simply punching them out to allow the swivel foot to be mounted to the ground.

Height of Swivel Foot:
Swivel Feet always have a minimum height of H = 30 mm (see figure 2) independently of the plate or threaded spindle size.
The height of the complete swivel foot is therefore calculated by adding 30 mm to the length of the threaded spindle.
(Total height swivel foot = L + 30 mm)

Note for ordering:
If the swivel foot plate and the threaded spindle are to be supplied assembled, please add the suffix **"assembled"** to the order number for the plate and spindle (see sample order on the relevant product page).

Figure 1

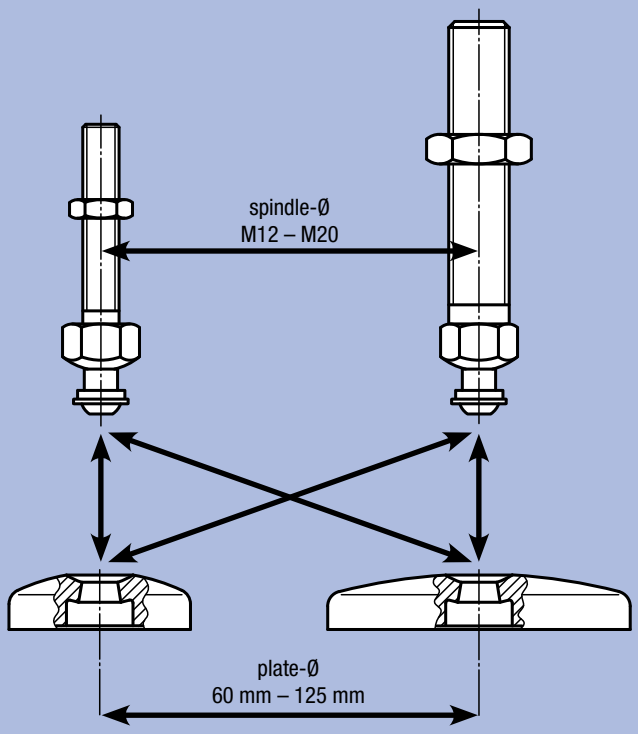

Figure 2

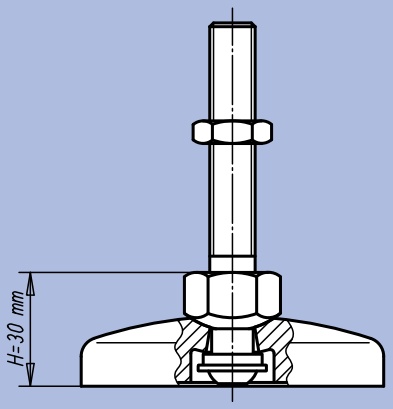

Inclination angle of threaded spindle:

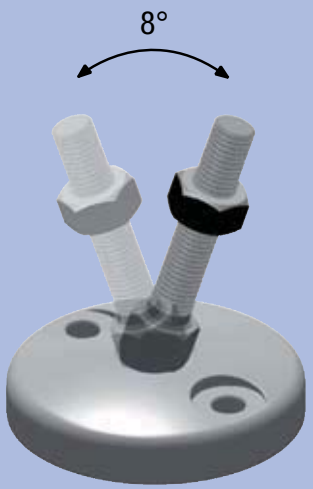

Plates for Swivel Feet

in plastic



Material:
Plates, thermoplastic, glass-fibre reinforced.
Anti-slip-plate in thermoplastic elastomer

Surface finish:
Black

Sample order:
nlm 27815-1060
nlm 27815-1060 and 27828-120661 **assembled**

Ordering example:
If the Swivel Foot plate and the threaded spindle are to be supplied assembled, please add the suffix **„assembled“** to the order number for the plate and spindle.
(e.g. 27815-1060 and 27828-120661 **assembled**.)

Note:
Swivel Feet consist of a plate and a threaded spindle. Any plate can be combined with any threaded spindle. The Anti-Slip-Plate absorbs vibrations and prevents slipping of the Swivel Foot.
For matching threaded spindles see 27828.

Form A
without screw-on hole
without anti-slip-plate

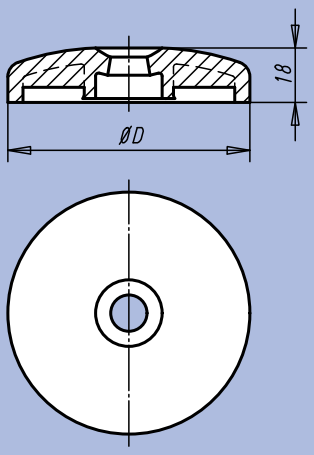

Form B
without screw-on hole
with anti-slip-plate

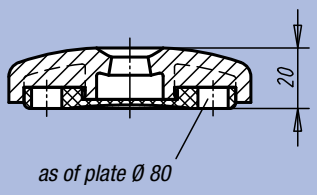

Form C
with screw-on hole (closed)
without anti-slip-plate

Form D
with screw-on hole (closed)
with anti-slip-plate

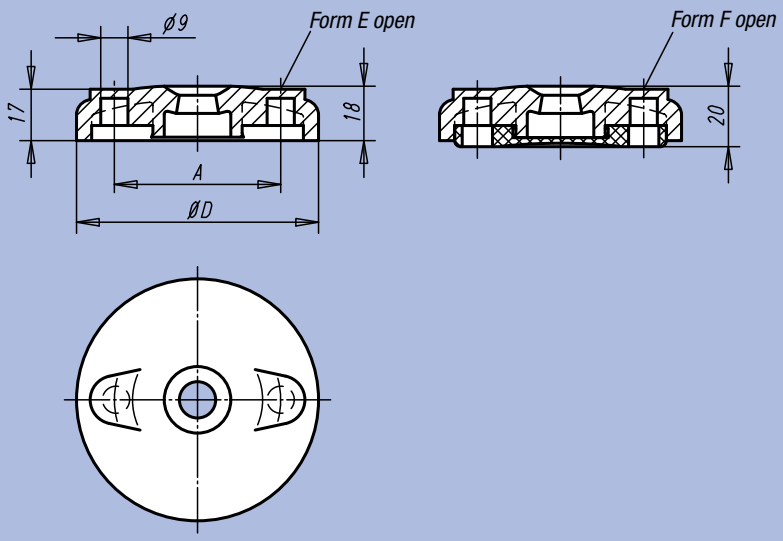

Form E
with screw-on hole (open)
without anti-slip-plate

Form F
with screw-on hole (open)
with anti-slip-plate

Order No. Form A	Order No. Form B	D	Load capacity max. kN
27815-1060	27815-2060	60	12
27815-1080	27815-2080	80	12
27815-1100	27815-2100	100	12

Order No. Form C	Order No. Form D	Order No. Form E	Order No. Form F	D	A	Load capacity max. kN
27815-3080	27815-4080	27815-5080	27815-6080	80	55	12
27815-3100	27815-4100	27815-5100	27815-6100	100	74	12

Plates for Swivel Feet

in plastic, heavy-duty model



Material:
Plates, thermoplastic, glass-fibre reinforced.
Anti-slip-plate in thermoplastic elastomer

Surface finish:
Black

Sample order:
nlm 27816-31251
nlm 27816-31251 and 27828-120661 **assembled**

Ordering example:
If the Swivel Foot plate and the threaded spindle are to be supplied assembled, please add the suffix **„assembled“** to the order number for the plate and spindle.
(e.g. 27816-31251 and 27828-120661 **assembled**.)

Note:
Swivel Feet consist of a plate and a threaded spindle. Any plate can be combined with any threaded spindle. The Anti-Slip-Plate absorbs vibrations and prevents slipping of the Swivel Foot.
For matching threaded spindles see 27828.

Form C
with screw-on hole (closed)
without anti-slip-plate

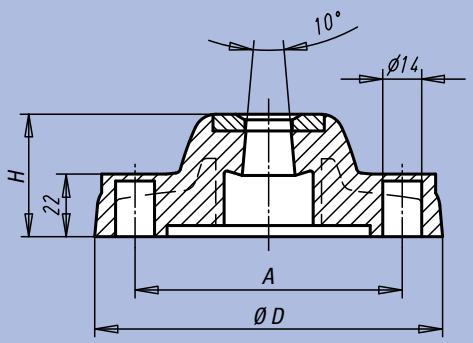

Form D
with screw-on hole (closed)
with anti-slip-plate

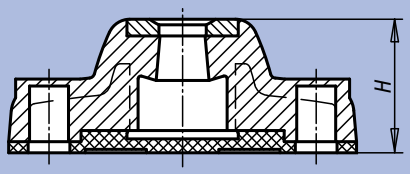

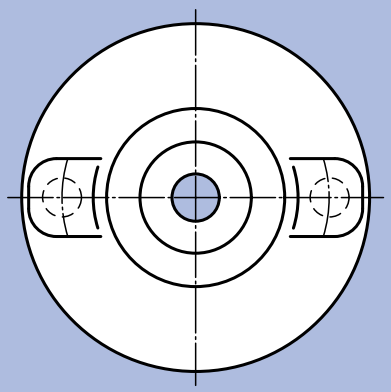

Order No.	Form	D	A	H	Load capacity max. kN	kg
27816-31251	C	125	96	44	18	0,234
27816-31751	C	175	135	45	25	0,344
27816-41251	D	125	96	48	18	0,322
27816-41751	D	175	135	49	25	0,566

Notes:

Plates for Swivel Feet

in die cast zinc or stainless steel



Material:
Plate in die cast zinc or stainless steel 1.4305, anti-slip-plate in thermoplastic elastomer

Surface finish:
Plate in die cast zinc, black powder-coated; plate in stainless steel, natural finish

Sample order:
nlm 27817-10601
nlm 27817-10601 and 27828-120661 **assembled**

Ordering example:
If the Swivel Foot plate and the threaded spindle are to be supplied assembled, please add the suffix **„assembled“** to the order number for the plate and spindle.
(e.g. 27817-10601 and 27828-120661 **assembled**.)

Note:
Swivel Feet consist of a plate and a threaded spindle. Any plate can be combined with any threaded spindle. The Anti-Slip-Plate absorbs vibrations and prevents slipping of the Swivel Foot.
For matching threaded spindles see 27828.

Form A
without screw-on hole
without anti-slip-plate

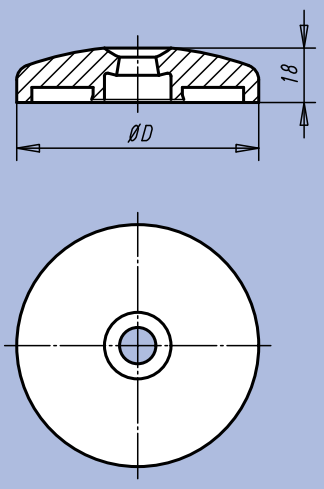

Form B
without screw-on hole
with anti-slip-plate

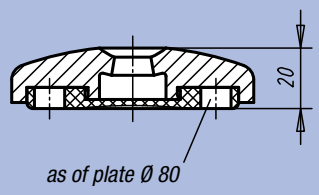

Form C
with screw-on hole (open)
without anti-slip-plate

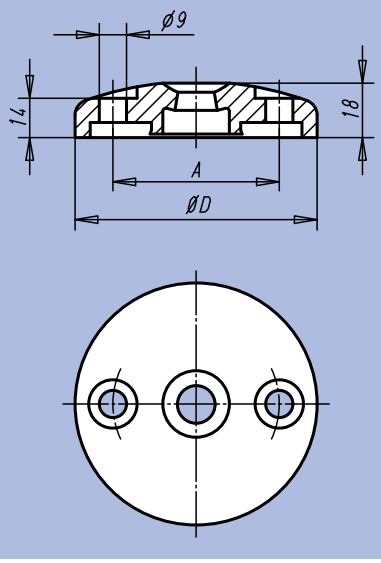

Form D
with screw-on hole (open)
with anti-slip-plate

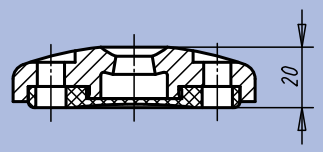

Plates for Swivel Feet

in die cast zinc or stainless steel

Order No. Form A	Order No. Form B	Material	D	Load capacity max. kN
27817-10401	-	die cast zinc	40	20
27817-10451	-	die cast zinc	45	25
27817-10501	-	die cast zinc	50	25
27817-10601	27817-20601	die cast zinc	60	35
27817-10801	27817-20801	die cast zinc	80	35
27817-11001	27817-21001	die cast zinc	100	35
27817-11201	27817-21201	die cast zinc	120	35

Order No. Form C	Order No. Form D	Material	D	A	Load capacity max. kN
27817-30801	27817-40801	die cast zinc	80	55	35
27817-31001	27817-41001	die cast zinc	100	74	35

Order No. Form A	Order No. Form B	Material	D	Load capacity max. kN
27817-10602	27817-20602	stainless steel	60	45
27817-10802	27817-20802	stainless steel	80	45
27817-11002	27817-21002	stainless steel	100	45

Order No. Form C	Order No. Form D	Material	D	A	Load capacity max. kN
27817-30802	27817-40802	stainless steel	80	55	45
27817-31002	27817-41002	stainless steel	100	74	45

Extended Plates for Swivel Feet

in die cast zinc



Material:
Plate in die cast zinc,
anti-slip-plate in thermoplastic elastomer

Surface finish:
Plate black powder-coated

Sample order:
nlm 27818-30801
nlm 27818-30801 and 27828-120661 **assembled**

Ordering example:
If the Swivel Foot plate and the threaded spindle are to be supplied assembled, please add the suffix **„assembled“** to the order number for the plate and spindle.
(e.g. 27818-30801 and 27828-120661 **assembled**.)

Note:
Swivel Feet consist of a plate and a threaded spindle. Any plate can be combined with any threaded spindle. The Anti-Slip-Plate absorbs vibrations and prevents slipping of the Swivel Foot.
For matching threaded spindles see 27828.

Form C
with screw-on hole
without anti-slip-plate

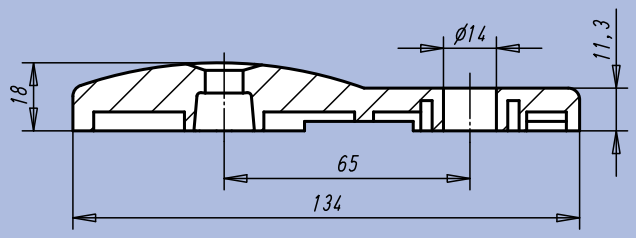

Form D
with screw-on hole
with anti-slip-plate

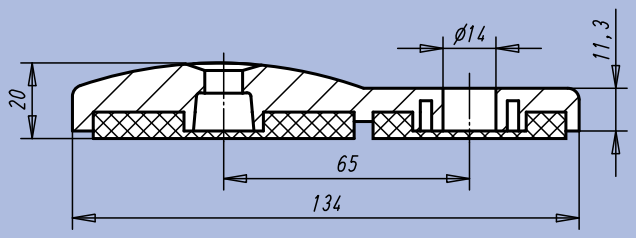

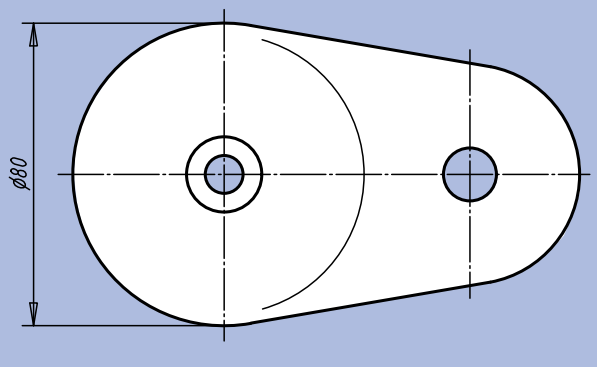

Order No.	Form	Load capacity max. kN	kg
27818-30801	C	35	0,400
27818-40801	D	35	0,435

Threaded Spindles for Swivel Feet

in steel or stainless steel





Material:
Steel or stainless steel 1.4305

Surface finish:
Steel blue chromated;
stainless steel, natural finish

Sample order:
nlm 27828-120661
nlm 27828-120661 and 27815-1060 **assembled**

Ordering example:
If the Threaded Spindle and the swivel foot plate are to be supplied assembled, please add the suffix **„assembled“** to the order number for the spindle and plate.
(e.g. 27828-120661 and 27815-1060 **assembled**.)

Note:
Swivel Feet consist of a plate and a threaded spindle. Any plate can be combined with any threaded spindle. The height of the complete Swivel Foot is calculated from the length of the threaded spindle + 30 mm.
(total height of Swivel Foot = L + 30 mm)

Order No. Material steel	Order No. Material stainless steel	D	L	SW	Load capacity max. kN	kg
27828-120661	27828-120662	M12	66	22	7,7	0,070
27828-121001	27828-121002	M12	100	22	7,7	0,094
27828-121251	27828-121252	M12	125	22	7,7	0,127
27828-121501	27828-121502	M12	150	22	7,7	0,130
27828-160661	27828-160662	M16	66	22	14,5	0,112
27828-161001	27828-161002	M16	100	22	14,5	0,152
27828-161251	27828-161252	M16	125	22	14,5	0,173
27828-161501	27828-161502	M16	150	22	14,5	0,235
27828-162001	27828-162002	M16	200	22	14,5	0,315
27828-201001	27828-201002	M20	100	22	24,3	0,237
27828-201251	27828-201252	M20	125	22	24,3	0,255
27828-201501	27828-201502	M20	150	22	24,3	0,341
27828-202001	27828-202002	M20	200	22	24,3	0,447

Modular Structure of a Swivel Foot ECO-Line

Application:
Swivel Feet ECO-Line are built up in modular fashion. The components can be combined individually to match the application. However, the threaded spindle is not screwed but instead **pressed in permanently**.
The swivel feet are therefore used for a wide range of machines and installations, including office furniture.

Modular structure:
The swivel feet consist of two components - a plate and a threaded spindle. **Any** plate can be combined with **any** threaded spindle (see figure 1).

Assembly:
Place swivel foot plate on threaded spindle and press pin in up to collar (threaded spindle cannot be inadvertently released from plate).

Note for ordering:
If the Swivel Foot plate and the threaded spindle are to be supplied assembled, please add the suffix **„assembled“** to the order number for the plate and spindle (see sample order on the relevant product page).

Figure 1

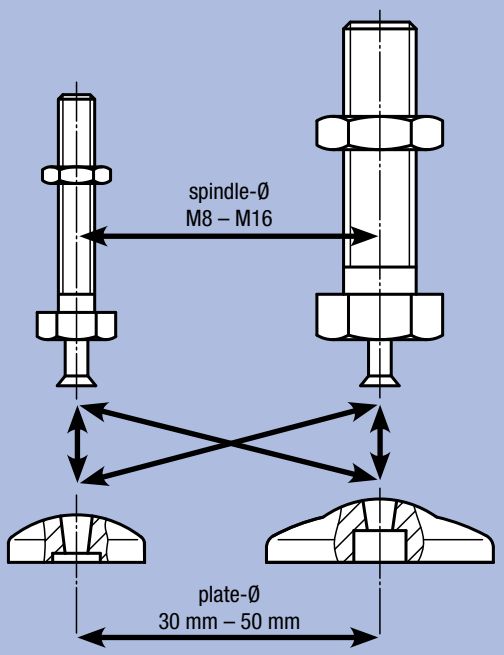

Figure 2

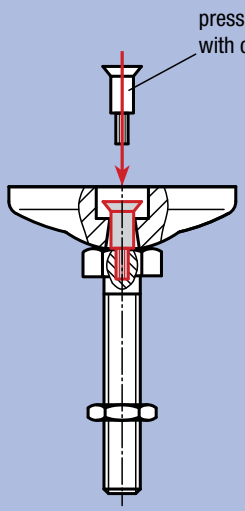

Inclination angle of threaded spindle:

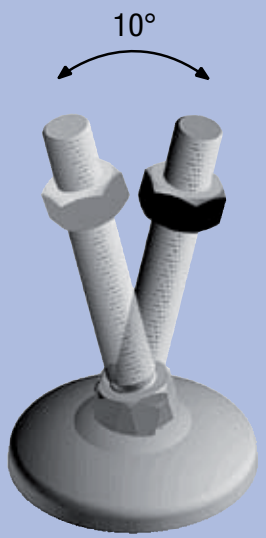

Plates for Swivel Feet ECO-Line

in die cast zinc, stainless steel or plastic



Material:
Plate in thermoplastic, die cast zinc or stainless steel 1.4305, anti-slip-plate in thermoplastic elastomer

Surface finish:
Plate in black thermoplastic, plate in blue galvanized die cast zinc, plate in stainless steel natural finish

Sample order:
nlm 27830-10303
nlm 27830-10303 and 27832-080801 **assembled**

Ordering example:
If the Swivel Foot plate and the threaded spindle are to be supplied assembled, please add the suffix **„assembled“** to the order number for the plate and spindle.
(e.g. 27830-10303 and 27832-080801 **assembled**.)

Note:
Swivel Feet ECO-Line consist of a plate and a threaded spindle. Any plate can be combined with any threaded spindle.
The Anti-Slip-Plate absorbs vibrations and prevents slipping of the Swivel Foot.
For matching threaded spindles see 27832.

Form A
without anti-slip-plate

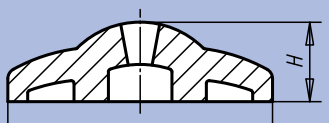

Form B
with anti-slip-plate

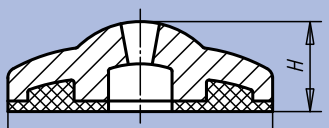

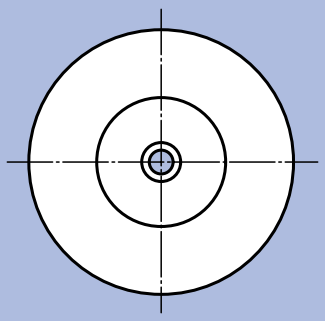

Order No.	Form	Material	D	H	Load capacity max. kN	kg
27830-10301	A	die cast zinc	30	11,5	16	0,020
27830-10401	A	die cast zinc	40	12	18	0,038
27830-10501	A	die cast zinc	50	14,5	20	0,060
27830-20301	B	die cast zinc	30	13,5	16	0,024
27830-20401	B	die cast zinc	40	14,5	18	0,044
27830-20501	B	die cast zinc	50	17,5	20	0,070
27830-10302	A	stainless steel	30	11,5	22	0,020
27830-10402	A	stainless steel	40	12	24	0,038
27830-10502	A	stainless steel	50	14,5	26	0,060
27830-20302	B	stainless steel	30	13,5	22	0,024
27830-20402	B	stainless steel	40	14,5	24	0,044
27830-20502	B	stainless steel	50	17,5	26	0,070
27830-10303	A	plastic	30	11,5	15	0,005
27830-10403	A	plastic	40	12	15	0,008
27830-10503	A	plastic	50	14,5	15	0,016
27830-20303	B	plastic	30	13,5	15	0,009
27830-20403	B	plastic	40	14,5	15	0,014
27830-20503	B	plastic	50	17,5	15	0,026

Threaded Spindles for Swivel Feet ECO-Line

in steel or stainless steel



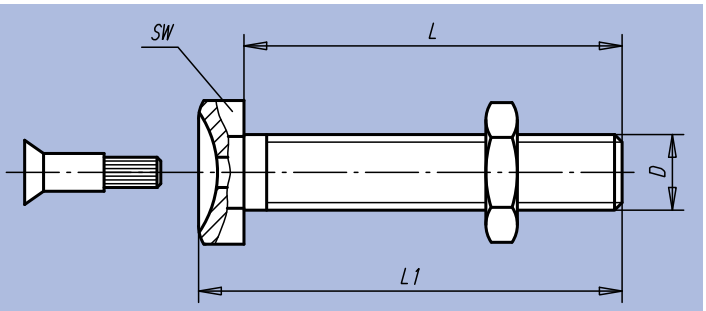

Material:
Steel or stainless steel 1.4305

Surface finish:
Steel blue chromated;
stainless steel, natural finish

Sample order:
nlm 27832-101201
nlm 27832-101201 and 27830-10301 **assembled**

Ordering example:
If the Threaded Spindle and the swivel foot plate are to be supplied assembled, please add the suffix **„assembled“** to the order number for the spindle and plate. (e.g. 27832-080251 and 27830-10301 **assembled**.)

Note:
Swivel Feet ECO-Line consist of a threaded spindle and a plate. Any threaded spindle can be combined with any plate.

Order No. Material steel	Order No. Material stainless steel	D	L	L1	SW	Load capacity max. kN	□ kg
27832-080251	27832-080252	M8	25	29,5	13	3,5	0,012
27832-080401	27832-080402	M8	40	44,5	13	3,5	0,017
27832-080501	27832-080502	M8	50	54,5	13	3,5	0,020
27832-080701	27832-080702	M8	70	74,5	13	3,5	0,026
27832-080801	27832-080802	M8	80	84,5	13	3,5	0,029
27832-081001	27832-081002	M8	100	104,5	13	3,5	0,035
27832-081201	27832-081202	M8	120	124,5	13	3,5	0,041
27832-100251	27832-100252	M10	25	30	17	4,7	0,022
27832-100401	27832-100402	M10	40	45	17	4,7	0,030
27832-100501	27832-100502	M10	50	55	17	4,7	0,035
27832-100701	27832-100702	M10	70	75	17	4,7	0,044
27832-100801	27832-100802	M10	80	85	17	4,7	0,049
27832-101001	27832-101002	M10	100	105	17	4,7	0,058
27832-101201	27832-101202	M10	120	125	17	4,7	0,069
27832-120251	27832-120252	M12	25	31	19	7,7	0,034
27832-120401	27832-120402	M12	40	46	19	7,7	0,044
27832-120501	27832-120502	M12	50	56	19	7,7	0,051
27832-120701	27832-120702	M12	70	76	19	7,7	0,065
27832-120801	27832-120802	M12	80	86	19	7,7	0,072
27832-121001	27832-121002	M12	100	106	19	7,7	0,086
27832-121201	27832-121202	M12	120	126	19	7,7	0,100
27832-160501	27832-160502	M16	50	58,5	24	14,5	0,115
27832-161001	27832-161002	M16	100	108,5	24	14,5	0,165
27832-161501	27832-161502	M16	150	158,5	24	14,5	0,190

Duck Feet



Material:
Sprayed aluminium

Surface finish:
Natural finish, vibration ground

Sample order:
nlm 27833-161

Note:
Stabile swivel foot which is ideally suited for conveyors. With appropriate align makings for precise positioning of the duck feet.

Zubehör:
For matching grub screws see 07640.



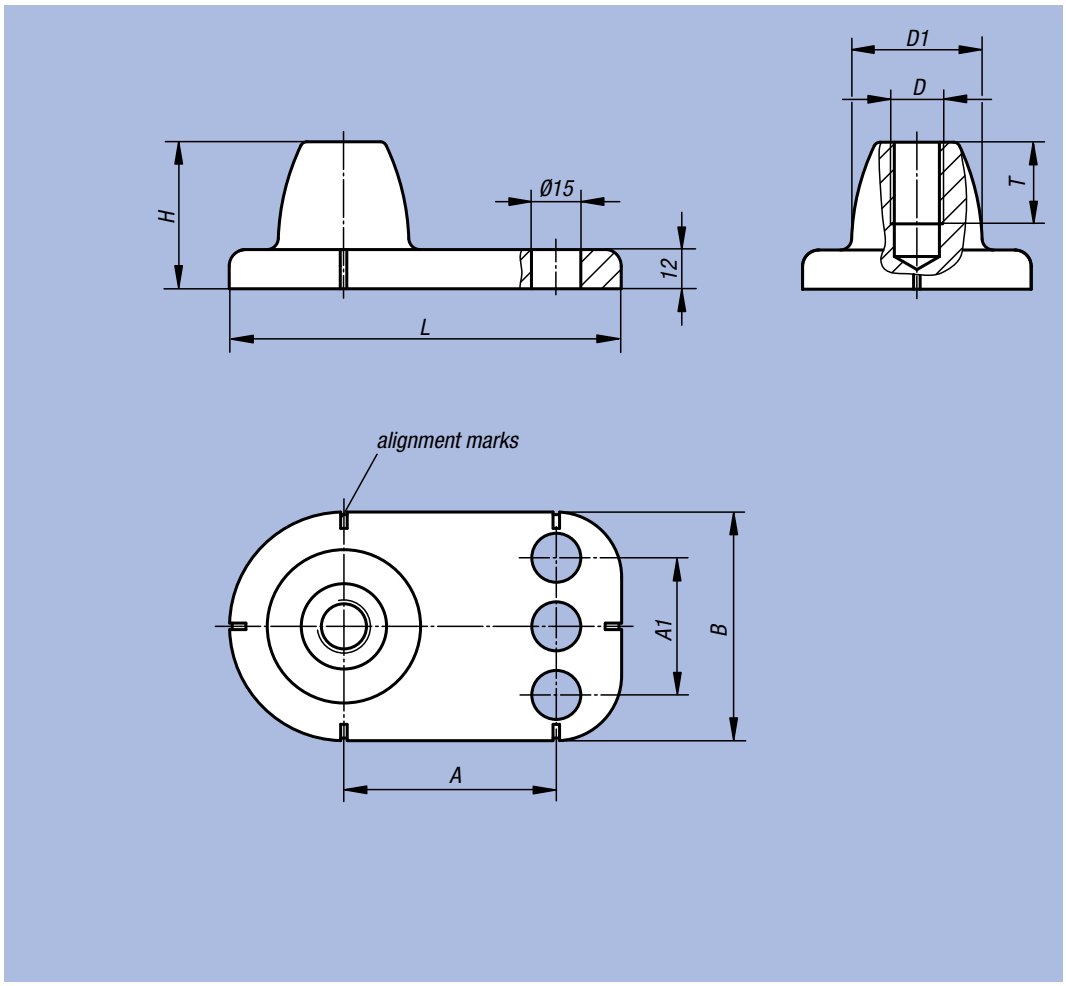

Order No.	A	A1	B	D	D1	H	L	T	Load bearing capacity N	kg
27833-161	65	-	70	M16	40	45	119,5	25	4000	0,224
27833-201	75	55	90	M20	52	50	139,5	27,5	6000	0,456
27833-241	85	70	110	M24	61	55	159,5	32	10000	0,647

Screw-in Plugs

for square tubes



Material:
Screw-in plugs, glass-fibre reinforced thermoplastic;
threaded insert, brass

Surface finish:
Plug black,
threaded insert nickel-plated

Sample order:
nlm 27835-103015

Note:
Screw-in Plugs are used for easy mounting of Swivel Feet and Swivel Pads to square tubes.

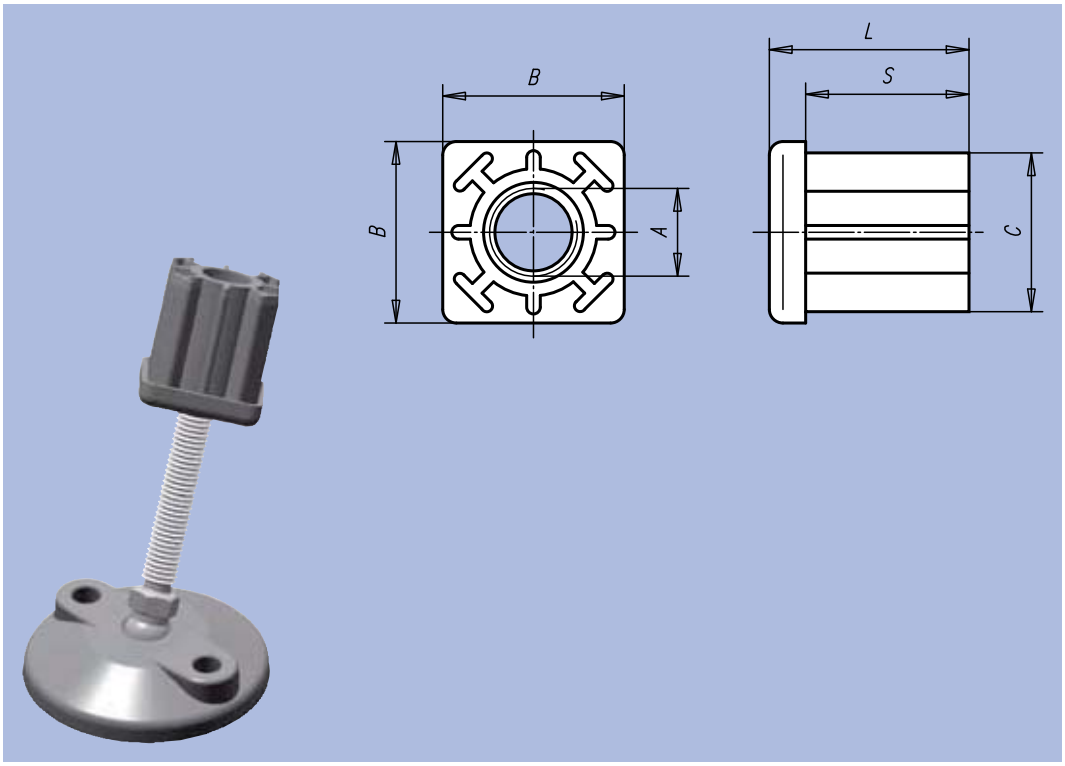

Order No.	A	B	C	L	S	Suitable for square tubes	Load capacity max. kN	kg
27835-103015	M10	30	27,5	33	27	30 x 1,5	5	0,031
27835-123015	M12	30	27,5	33	27	30 x 1,5	5	0,031
27835-143015	M14	30	27,5	33	27	30 x 1,5	5	0,033
27835-163015	M16	30	27,5	33	27	30 x 1,5	5	0,037
27835-103020	M10	30	26,5	33	27	30 x 2	5	0,031
27835-123020	M12	30	26,5	33	27	30 x 2	5	0,031
27835-143020	M14	30	26,5	33	27	30 x 2	5	0,033
27835-163020	M16	30	26,5	33	27	30 x 2	5	0,037
27835-104015	M10	40	37,5	43	35	40 x 1,5	8	0,060
27835-124015	M12	40	37,5	43	35	40 x 1,5	8	0,060
27835-144015	M14	40	37,5	43	35	40 x 1,5	8	0,060
27835-164015	M16	40	37,5	43	35	40 x 1,5	8	0,063
27835-204015	M20	40	37,5	43	35	40 x 1,5	8	0,072
27835-104020	M10	40	36,5	43	35	40 x 2	10	0,055
27835-124020	M12	40	36,5	43	35	40 x 2	10	0,055
27835-144020	M14	40	36,5	43	35	40 x 2	10	0,060
27835-164020	M16	40	36,5	43	35	40 x 2	10	0,060
27835-204020	M20	40	36,5	43	35	40 x 2	10	0,069
27835-104025	M10	40	35,5	43	35	40 x 2,5	10	0,055
27835-124025	M12	40	35,5	43	35	40 x 2,5	10	0,055
27835-144025	M14	40	35,5	43	35	40 x 2,5	10	0,060
27835-164025	M16	40	35,5	43	35	40 x 2,5	10	0,060
27835-204025	M20	40	35,5	43	35	40 x 2,5	10	0,069
27835-104030	M10	40	34,5	43	35	40 x 3	10	0,055
27835-124030	M12	40	34,5	43	35	40 x 3	10	0,055
27835-144030	M14	40	34,5	43	35	40 x 3	10	0,060
27835-164030	M16	40	34,5	43	35	40 x 3	10	0,060
27835-204030	M20	40	34,5	43	35	40 x 3	10	0,069
27835-104040	M10	40	32,5	43	35	40 x 4	10	0,055
27835-124040	M12	40	32,5	43	35	40 x 4	10	0,055
27835-144040	M14	40	32,5	43	35	40 x 4	10	0,060

Order No.	A	B	C	L	S	Suitable for square tubes	Load capacity max. kN	kg
27835-164040	M16	40	32,5	43	35	40 x 4	10	0,060
27835-204040	M20	40	32,5	43	35	40 x 4	10	0,069
27835-125015	M12	50	47,5	55	44	50 x 1,5	8	0,084
27835-145015	M14	50	47,5	55	44	50 x 1,5	8	0,092
27835-165015	M16	50	47,5	55	44	50 x 1,5	8	0,093
27835-205015	M20	50	47,5	55	44	50 x 1,5	8	0,101
27835-125020	M12	50	46,5	55	44	50 x 2	12	0,084
27835-145020	M14	50	46,5	55	44	50 x 2	12	0,092
27835-165020	M16	50	46,5	55	44	50 x 2	12	0,093
27835-205020	M20	50	46,5	55	44	50 x 2	12	0,101
27835-125025	M12	50	45,5	55	44	50 x 2,5	12	0,084
27835-145025	M14	50	45,5	55	44	50 x 2,5	12	0,092
27835-165025	M16	50	45,5	55	44	50 x 2,5	12	0,093
27835-205025	M20	50	45,5	55	44	50 x 2,5	12	0,101
27835-125030	M12	50	44,5	55	44	50 x 3	12	0,085
27835-145030	M14	50	44,5	55	44	50 x 3	12	0,087
27835-165030	M16	50	44,5	55	44	50 x 3	12	0,090
27835-205030	M20	50	44,5	55	44	50 x 3	12	0,093
27835-125040	M12	50	42,5	55	44	50 x 4	12	0,091
27835-145040	M14	50	42,5	55	44	50 x 4	12	0,092
27835-165040	M16	50	42,5	55	44	50 x 4	12	0,094
27835-205040	M20	50	42,5	55	44	50 x 4	12	0,102
27835-146020	M14	60	56,5	55	45	60 x 2	12	0,118
27835-166020	M16	60	56,5	55	45	60 x 2	12	0,132
27835-206020	M20	60	56,5	55	45	60 x 2	12	0,134
27835-146030	M14	60	54,5	55	45	60 x 3	12	0,122
27835-166030	M16	60	54,5	55	45	60 x 3	12	0,123
27835-206030	M20	60	54,5	55	45	60 x 3	12	0,124
27835-146040	M14	60	52,5	55	45	60 x 4	12	0,119
27835-166040	M16	60	52,5	55	45	60 x 4	12	0,121
27835-206040	M20	60	52,5	55	45	60 x 4	12	0,125

Screw-in Plugs

for tubes



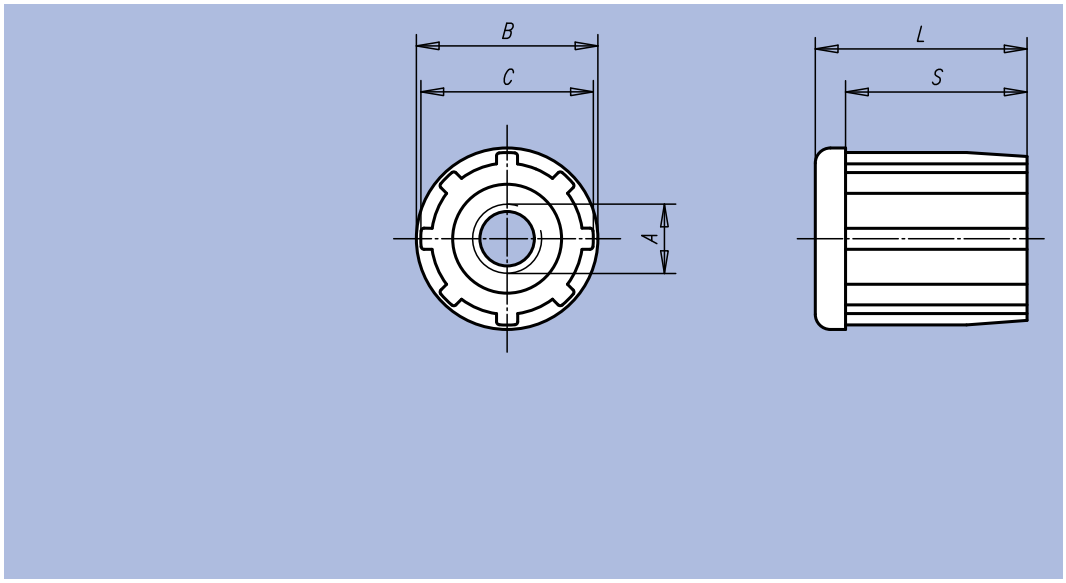

Material:
Screw-in plugs, glass-fibre reinforced thermoplastic;
threaded insert, brass

Surface finish:
Plug black,
threaded insert nickel-plated

Sample order:
nlm 27836-103010

Note:
Screw-in Plugs are used for easy mounting of Swivel Feet and Swivel Pads to tubes.

Order No.	A	B	C	L	S	Suitable for tubes	Load capacity max. kN
27836-103010	M10	30	28,4	33	27	Ø 30 x 1	5
27836-123010	M12	30	28,4	33	27	Ø 30 x 1	5
27836-143010	M14	30	28,4	33	27	Ø 30 x 1	5
27836-163010	M16	30	28,4	33	27	Ø 30 x 1	5
27836-103815	M10	38	35,5	43	35	Ø 38 x 1,5	5
27836-123815	M12	38	35,5	43	35	Ø 38 x 1,5	5
27836-143815	M14	38	35,5	43	35	Ø 38 x 1,5	5
27836-163815	M16	38	35,5	43	35	Ø 38 x 1,5	5
27836-104215	M10	42	39,9	43	35	Ø 42,4 x 1,5	6
27836-124215	M12	42	39,9	43	35	Ø 42,4 x 1,5	6
27836-144215	M14	42	39,9	43	35	Ø 42,4 x 1,5	6
27836-164215	M16	42	39,9	43	35	Ø 42,4 x 1,5	6
27836-204215	M20	42	39,9	43	35	Ø 42,4 x 1,5	6
27836-124815	M12	48	45,8	55	44	Ø 48,3 x 1,5	6
27836-144815	M14	48	45,8	55	44	Ø 48,3 x 1,5	6
27836-164815	M16	48	45,8	55	44	Ø 48,3 x 1,5	6
27836-204815	M20	48	45,8	55	44	Ø 48,3 x 1,5	6
27836-125015	M12	50	48,4	55	44	Ø 50,9 x 1,5	6
27836-145015	M14	50	48,4	55	44	Ø 50,9 x 1,5	6
27836-165015	M16	50	48,4	55	44	Ø 50,9 x 1,5	6
27836-205015	M20	50	48,4	55	44	Ø 50,9 x 1,5	6

Height-Adjustable Equipment Feet

for aluminium profiles



Material, surface finish:
Housing, glass-fibre reinforced thermoplastic, black;
spindle and washer, galvanized steel

Sample order:
nlm 27840-300805

Note:
Equipment Feet are particularly suitable for tables and lighter installations. The equipment foot height can be infinitely adjusted by turning the nut by hand or tool. The pins at the bottom centre of the equipment foot secure it against torsion. Equipment Feet can be secured on aluminium profiles without costly drilling by using a nut for T-slots.

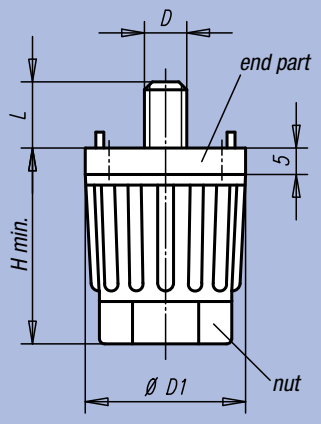

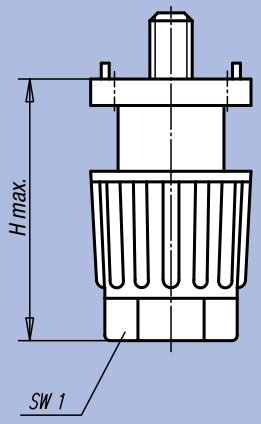

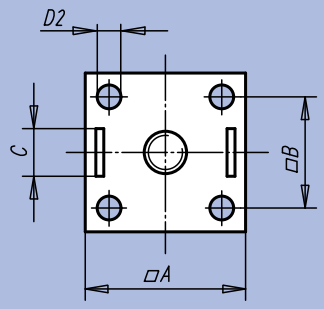

Side assembly in profile

no drilling necessary by using a T-slot nut



Head end assembly



Order No.	A for aluminium profile	B	C for slot	D	D1	D2 for countersunk screw	H min. - max.	L	SW1	Load capacity max. kN	□ kg
27840-300805	30	20,5	8	M5	30	M4	35-50	14	22	1,5	0,040
27840-300806	30	20,5	8	M6	30	M4	35-50	14	22	1,5	0,040
27840-300808	30	20,5	8	M8	30	M4	35-50	14	22	1,5	0,040
27840-301005	30	20,5	10	M5	30	M4	35-50	14	22	1,5	0,040
27840-301006	30	20,5	10	M6	30	M4	35-50	14	22	1,5	0,040
27840-301008	30	20,5	10	M8	30	M4	35-50	14	22	1,5	0,040
27840-400806	40	28	8	M6	40	M6	45-65	14	30	1,5	0,078
27840-400808	40	28	8	M8	40	M6	45-65	14	30	1,5	0,078
27840-401006	40	28	10	M6	40	M6	45-65	14	30	1,5	0,078
27840-401008	40	28	10	M8	40	M6	45-65	14	30	1,5	0,078

Height-Adjustable Equipment Feet



Material, surface finish:
Housing, glass-fibre reinforced thermoplastic, black;
hexagon screw, galvanized steel

Sample order:
nlm 27841-3004

Note:
With its flat end part and the countersunk hexagon head screw, the equipment foot is ideal for mounting on smooth surfaces.
The equipment foot height can be infinitely adjusted by turning the nut by hand or tool.

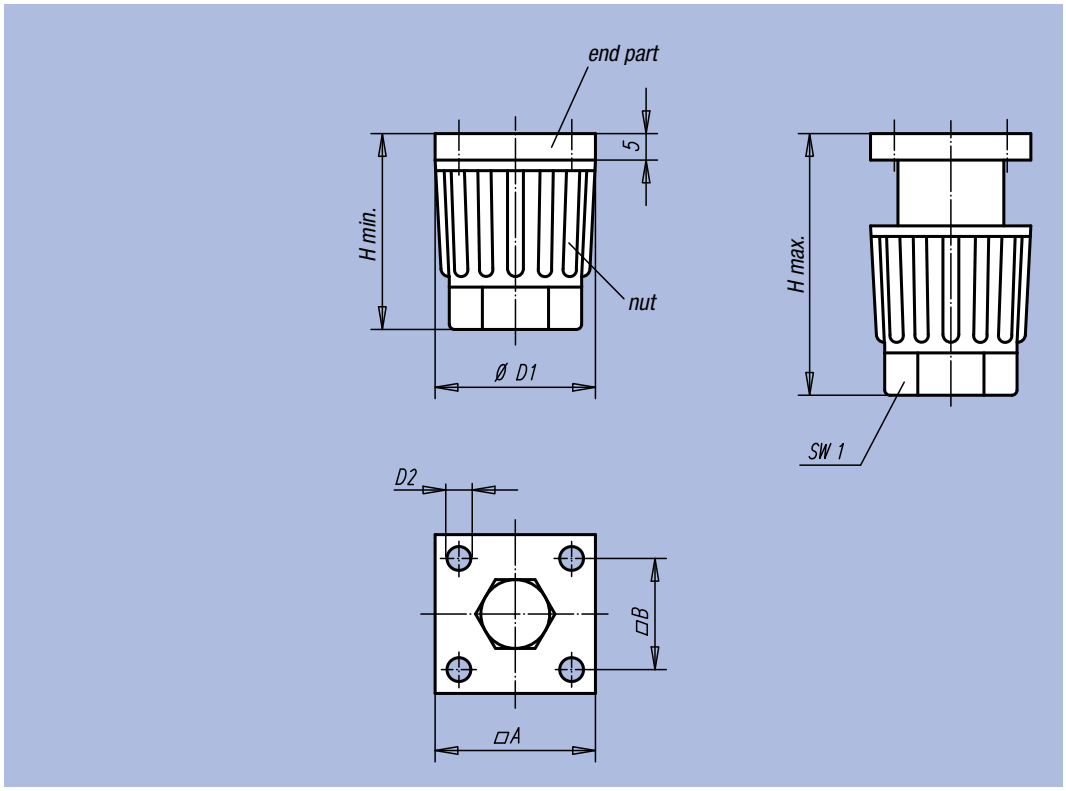

Order No.	A	B	D1	D2 for countersunk screw	H min. - max.	SW1	Load capacity max. kN	kg
27841-3004	30	20,5	30	M4	35-50	22	1,5	0,045
27841-4006	40	28	40	M6	45-65	30	1,5	0,081

Technical Information for Hinges

Hinges
We have set out as many as 161 hinge variants in a clear table for you. Many more variations are possible if you need hinges with guide tabs, forinstance for combining aluminium profiles with different slot widths.



By the way,
Hinges are supplied with a stainless steel axle as standard.
Hinges 27853 and 27868 are supplied with a steel axle.

Left and right hinge
Each uncoupling hinge has a left and right version. You should therefore know when ordering on which side the door or flap is mounted.

Left hinge
The fixed side is on the left, the flap or door opens from right to left.



Right hinge
The fixed side is on the right, the flap or door opens from left to right.



Fixed hinge
The hinge cannot be uncoupled. It can be used for left and right.

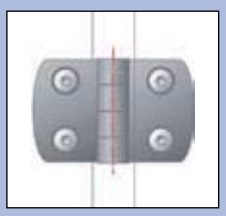

Guide tabs
Many hinges can be supplied on request with guide tabs for the slots of aluminium profiles. They secure the hinge against twisting and make it stronger.
The hinges are designed in such a way that the guide tabs can simply be broken out with a screwdriver.



without
guide tabs





with
guide tabs
for aluminium
profiles with slot



A trick for you
If you want to fit a door or flap so that it **cannot** be uncoupled, you can use a left and right **uncoupling** hinge for this.
The two hinges are mounted in coupled condition and mutually secure each other.

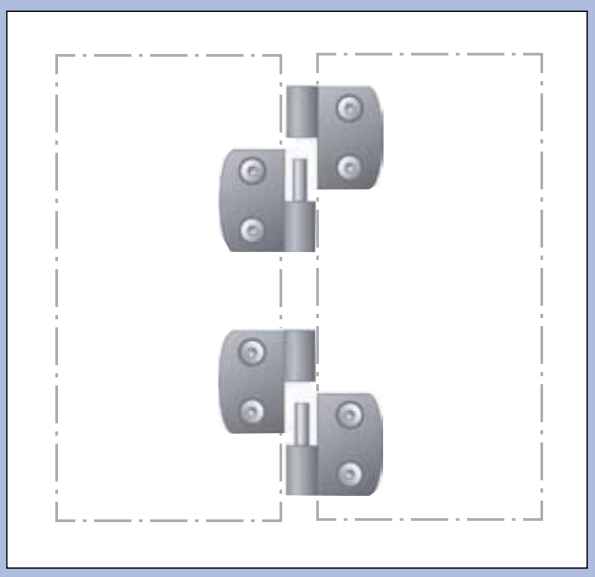

Hinges

in plastic, detachable, left



Material:
Glass-fibre reinforced thermoplastic; axle in stainless steel

Surface finish:
Hinge black, axle natural finish

Sample order:
nlm 27850-1301825

Note:
All hinges can be supplied on request with guide tabs for the slots of aluminium profiles (slots 6, 8 and 10). They facilitate mounting, secure the hinge against twisting and make it stronger.

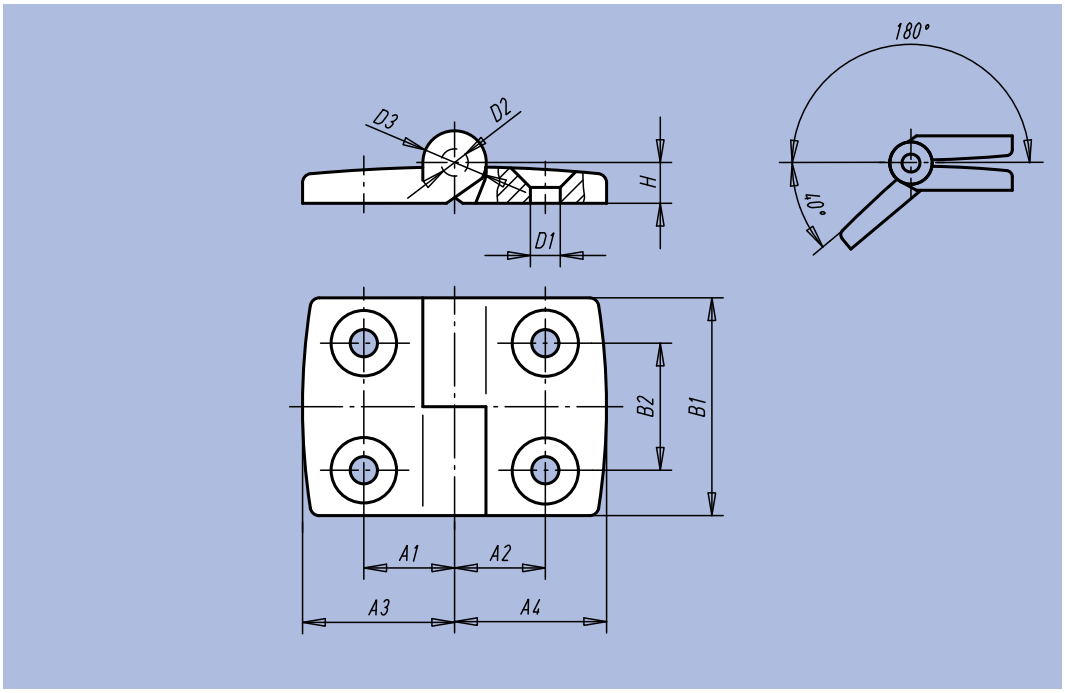

Order No.	A1	A2	A3	A4	B1	B2	D1	D2	D3	H	Load bearing capacity N	kg
27850-1251515	15	15	26	26	48	28	6,6	6	14	9	1200	0,031
27850-1251518	15	17,5	26	29,5	48	28	6,6	6	14	9	1200	0,033
27850-1251520	15	20	26	35,5	48	28	6,6	6	14	9	1200	0,035
27850-1251523	15	22,5	26	38,5	48	28	6,6	6	14	9	1200	0,037
27850-1251525	15	25	26	43,5	48	28	6,6	6	14	9	1200	0,038
27850-1251528	15	27,5	26	48,5	48	28	6,6	6	14	9	1200	0,040
27850-1251533	15	32,5	26	57,5	48	28	6,6	6	14	9	1200	0,043
27850-1301815	17,5	15	29,5	26	48	28	6,6	6	14	9	1200	0,033
27850-1301818	17,5	17,5	29,5	29,5	48	28	6,6	6	14	9	1200	0,034
27850-1301820	17,5	20	29,5	35,5	48	28	6,6	6	14	9	1200	0,036
27850-1301823	17,5	22,5	29,5	38,5	48	28	6,6	6	14	9	1200	0,038
27850-1301825	17,5	25	29,5	43,5	48	28	6,6	6	14	9	1200	0,040
27850-1301828	17,5	27,5	29,5	48,5	48	28	6,6	6	14	9	1200	0,041
27850-1301833	17,5	32,5	29,5	57,5	48	28	6,6	6	14	9	1200	0,045
27850-1352015	20	15	35,5	26	48	28	6,6	6	14	9	1200	0,034
27850-1352018	20	17,5	35,5	29,5	48	28	6,6	6	14	9	1200	0,036
27850-1352020	20	20	35,5	35,5	48	28	6,6	6	14	9	1200	0,038
27850-1352023	20	22,5	35,5	38,5	48	28	6,6	6	14	9	1200	0,040
27850-1352025	20	25	35,5	43,5	48	28	6,6	6	14	9	1200	0,042
27850-1352028	20	27,5	35,5	48,5	48	28	6,6	6	14	9	1200	0,043
27850-1352033	20	32,5	35,5	57,5	48	28	6,6	6	14	9	1200	0,047
27850-1402315	22,5	15	38,5	26	48	28	6,6	6	14	9	1200	0,037
27850-1402318	22,5	17,5	38,5	29,5	48	28	6,6	6	14	9	1200	0,038
27850-1402320	22,5	20	38,5	35,5	48	28	6,6	6	14	9	1200	0,040
27850-1402323	22,5	22,5	38,5	38,5	48	28	6,6	6	14	9	1200	0,042

Order No.	A1	A2	A3	A4	B1	B2	D1	D2	D3	H	Load bearing capacity N	kg
27850-1402325	22,5	25	38,5	43,5	48	28	6,6	6	14	9	1200	0,043
27850-1402328	22,5	27,5	38,5	48,5	48	28	6,6	6	14	9	1200	0,045
27850-1402333	22,5	32,5	38,5	57,5	48	28	6,6	6	14	9	1200	0,049
27850-1452515	25	15	43,5	26	48	28	6,6	6	14	9	1200	0,038
27850-1452518	25	17,5	43,5	29,5	48	28	6,6	6	14	9	1200	0,040
27850-1452520	25	20	43,5	35,5	48	28	6,6	6	14	9	1200	0,042
27850-1452523	25	22,5	43,5	38,5	48	28	6,6	6	14	9	1200	0,043
27850-1452525	25	25	43,5	43,5	48	28	6,6	6	14	9	1200	0,045
27850-1452528	25	27,5	43,5	48,5	48	28	6,6	6	14	9	1200	0,046
27850-1452533	25	32,5	43,5	57,5	48	28	6,6	6	14	9	1200	0,050
27850-1502815	27,5	15	48,5	26	48	28	6,6	6	14	9	1200	0,040
27850-1502818	27,5	17,5	48,5	29,5	48	28	6,6	6	14	9	1200	0,041
27850-1502820	27,5	20	48,5	35,5	48	28	6,6	6	14	9	1200	0,043
27850-1502823	27,5	22,5	48,5	38,5	48	28	6,6	6	14	9	1200	0,045
27850-1502825	27,5	25	48,5	43,5	48	28	6,6	6	14	9	1200	0,046
27850-1502828	27,5	27,5	48,5	48,5	48	28	6,6	6	14	9	1200	0,048
27850-1502833	27,5	32,5	48,5	57,5	48	28	6,6	6	14	9	1200	0,052
27850-1603315	32,5	15	57,5	26	48	28	6,6	6	14	9	1200	0,043
27850-1603318	32,5	17,5	57,5	29,5	48	28	6,6	6	14	9	1200	0,045
27850-1603320	32,5	20	57,5	35,5	48	28	6,6	6	14	9	1200	0,047
27850-1603323	32,5	22,5	57,5	38,5	48	28	6,6	6	14	9	1200	0,049
27850-1603325	32,5	25	57,5	43,5	48	28	6,6	6	14	9	1200	0,050
27850-1603328	32,5	27,5	57,5	48,5	48	28	6,6	6	14	9	1200	0,052
27850-1603333	32,5	32,5	57,5	57,5	48	28	6,6	6	14	9	1200	0,055

Hinges

in plastic, detachable, right



Material:
Glass-fibre reinforced thermoplastic; axle in stainless steel

Surface finish:
Hinge black, axle natural finish

Sample order:
nlm 27850-2251523

Note:
All hinges can be supplied on request with guide tabs for the slots of aluminium profiles (slots 6, 8 and 10). They facilitate mounting, secure the hinge against twisting and make it stronger.

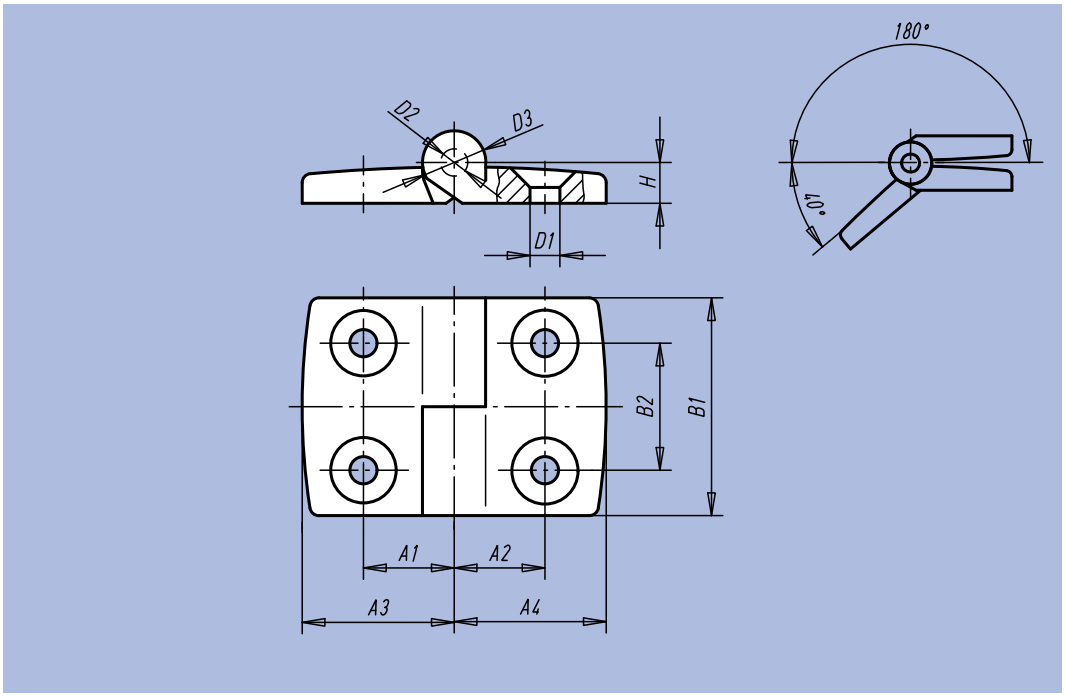

Order No.	A1	A2	A3	A4	B1	B2	D1	D2	D3	H	Load bearing capacity N	kg
27850-2251515	15	15	26	26	48	28	6,6	6	14	9	1200	0,031
27850-2251518	15	17,5	26	29,5	48	28	6,6	6	14	9	1200	0,033
27850-2251520	15	20	26	35,5	48	28	6,6	6	14	9	1200	0,035
27850-2251523	15	22,5	26	38,5	48	28	6,6	6	14	9	1200	0,037
27850-2251525	15	25	26	43,5	48	28	6,6	6	14	9	1200	0,038
27850-2251528	15	27,5	26	48,5	48	28	6,6	6	14	9	1200	0,040
27850-2251533	15	32,5	26	57,5	48	28	6,6	6	14	9	1200	0,043
27850-2301815	17,5	15	29,5	26	48	28	6,6	6	14	9	1200	0,033
27850-2301818	17,5	17,5	29,5	29,5	48	28	6,6	6	14	9	1200	0,034
27850-2301820	17,5	20	29,5	35,5	48	28	6,6	6	14	9	1200	0,036
27850-2301823	17,5	22,5	29,5	38,5	48	28	6,6	6	14	9	1200	0,038
27850-2301825	17,5	25	29,5	43,5	48	28	6,6	6	14	9	1200	0,040
27850-2301828	17,5	27,5	29,5	48,5	48	28	6,6	6	14	9	1200	0,041
27850-2301833	17,5	32,5	29,5	57,5	48	28	6,6	6	14	9	1200	0,045
27850-2352015	20	15	35,5	26	48	28	6,6	6	14	9	1200	0,034
27850-2352018	20	17,5	35,5	29,5	48	28	6,6	6	14	9	1200	0,036
27850-2352020	20	20	35,5	35,5	48	28	6,6	6	14	9	1200	0,038
27850-2352023	20	22,5	35,5	38,5	48	28	6,6	6	14	9	1200	0,040
27850-2352025	20	25	35,5	43,5	48	28	6,6	6	14	9	1200	0,042
27850-2352028	20	27,5	35,5	48,5	48	28	6,6	6	14	9	1200	0,043
27850-2352033	20	32,5	35,5	57,5	48	28	6,6	6	14	9	1200	0,047
27850-2402315	22,5	15	38,5	26	48	28	6,6	6	14	9	1200	0,037
27850-2402318	22,5	17,5	38,5	29,5	48	28	6,6	6	14	9	1200	0,038
27850-2402320	22,5	20	38,5	35,5	48	28	6,6	6	14	9	1200	0,040
27850-2402323	22,5	22,5	38,5	38,5	48	28	6,6	6	14	9	1200	0,042

Order No.	A1	A2	A3	A4	B1	B2	D1	D2	D3	H	Load bearing capacity N	kg
27850-2402325	22,5	25	38,5	43,5	48	28	6,6	6	14	9	1200	0,043
27850-2402328	22,5	27,5	38,5	48,5	48	28	6,6	6	14	9	1200	0,045
27850-2402333	22,5	32,5	38,5	57,5	48	28	6,6	6	14	9	1200	0,049
27850-2452515	25	15	43,5	26	48	28	6,6	6	14	9	1200	0,038
27850-2452518	25	17,5	43,5	29,5	48	28	6,6	6	14	9	1200	0,040
27850-2452520	25	20	43,5	35,5	48	28	6,6	6	14	9	1200	0,042
27850-2452523	25	22,5	43,5	38,5	48	28	6,6	6	14	9	1200	0,043
27850-2452525	25	25	43,5	43,5	48	28	6,6	6	14	9	1200	0,045
27850-2452528	25	27,5	43,5	48,5	48	28	6,6	6	14	9	1200	0,046
27850-2452533	25	32,5	43,5	57,5	48	28	6,6	6	14	9	1200	0,050
27850-2502815	27,5	15	48,5	26	48	28	6,6	6	14	9	1200	0,040
27850-2502818	27,5	17,5	48,5	29,5	48	28	6,6	6	14	9	1200	0,041
27850-2502820	27,5	20	48,5	35,5	48	28	6,6	6	14	9	1200	0,043
27850-2502823	27,5	22,5	48,5	38,5	48	28	6,6	6	14	9	1200	0,045
27850-2502825	27,5	25	48,5	43,5	48	28	6,6	6	14	9	1200	0,046
27850-2502828	27,5	27,5	48,5	48,5	48	28	6,6	6	14	9	1200	0,048
27850-2502833	27,5	32,5	48,5	57,5	48	28	6,6	6	14	9	1200	0,052
27850-2603315	32,5	15	57,5	26	48	28	6,6	6	14	9	1200	0,043
27850-2603318	32,5	17,5	57,5	29,5	48	28	6,6	6	14	9	1200	0,045
27850-2603320	32,5	20	57,5	35,5	48	28	6,6	6	14	9	1200	0,047
27850-2603323	32,5	22,5	57,5	38,5	48	28	6,6	6	14	9	1200	0,049
27850-2603325	32,5	25	57,5	43,5	48	28	6,6	6	14	9	1200	0,050
27850-2603328	32,5	27,5	57,5	48,5	48	28	6,6	6	14	9	1200	0,052
27850-2603333	32,5	32,5	57,5	57,5	48	28	6,6	6	14	9	1200	0,055

Hinges

in plastic



Material:
Glass-fibre reinforced thermoplastic; axle in stainless steel

Surface finish:
Hinge black, axle natural finish

Sample order:
nlm 27852-251528

Note:
Hinges with different wing lengths can be used on the left and right.
All hinges can be supplied on request with guide tabs for the slots of aluminium profiles (slots 6, 8 and 10). They facilitate mounting, secure the hinge against twisting and make it stronger.

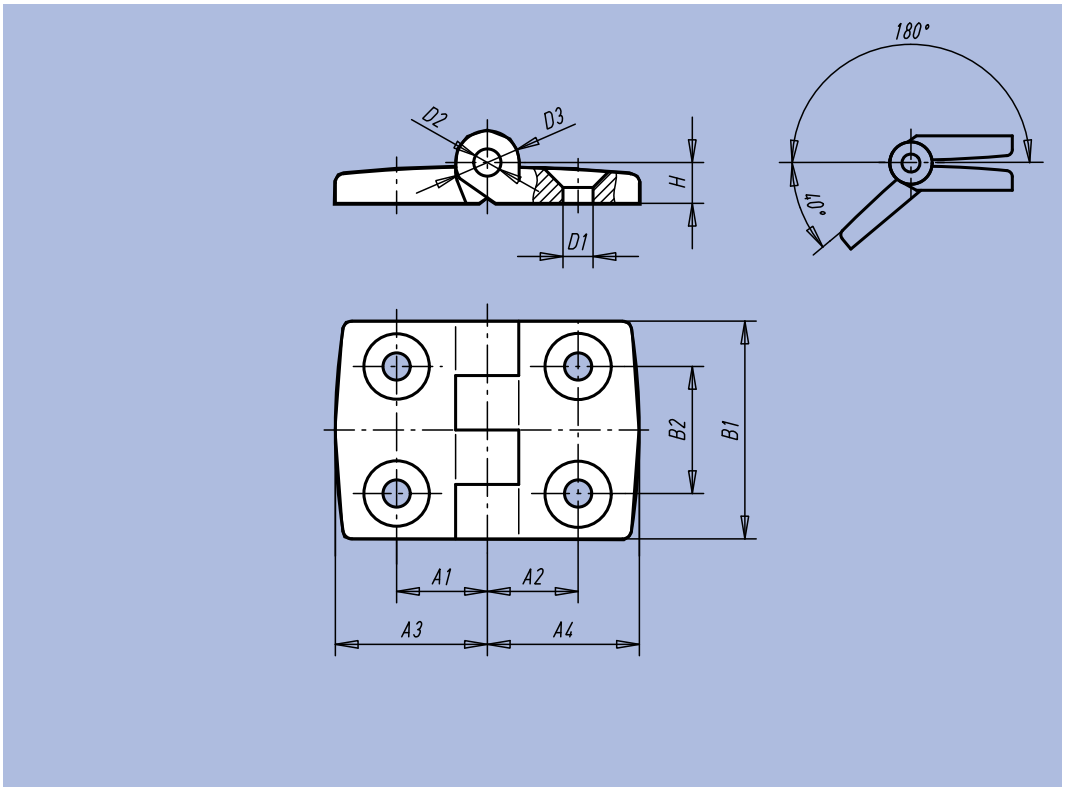

Order No.	A1	A2	A3	A4	B1	B2	D1	D2	D3	H	Load bearing capacity N	kg
27852-201212	11,5	11,5	19,5	19,5	30	14	4,2	3	8	5,5	400	0,008
27852-251515	15	15	26	26	48	28	6,6	6	14	9	1200	0,032
27852-251518	15	17,5	26	29,5	48	28	6,6	6	14	9	1200	0,034
27852-251520	15	20	26	35,5	48	28	6,6	6	14	9	1200	0,036
27852-251523	15	22,5	26	38,5	48	28	6,6	6	14	9	1200	0,038
27852-251525	15	25	26	43,5	48	28	6,6	6	14	9	1200	0,039
27852-251528	15	27,5	26	48,5	48	28	6,6	6	14	9	1200	0,041
27852-251533	15	32,5	26	57,5	48	28	6,6	6	14	9	1200	0,041
27852-301818	17,5	17,5	29,5	29,5	48	28	6,6	6	14	9	1200	0,036
27852-301820	17,5	20	29,5	35,5	48	28	6,6	6	14	9	1200	0,037
27852-301823	17,5	22,5	29,5	38,5	48	28	6,6	6	14	9	1200	0,039
27852-301825	17,5	25	29,5	43,5	48	28	6,6	6	14	9	1200	0,041
27852-301828	17,5	27,5	29,5	48,5	48	28	6,6	6	14	9	1200	0,043
27852-301833	17,5	32,5	29,5	57,5	48	28	6,6	6	14	9	1200	0,046
27852-352020	20	20	35,5	35,5	48	28	6,6	6	14	9	1200	0,040
27852-352023	20	22,5	35,5	38,5	48	28	6,6	6	14	9	1200	0,041
27852-352025	20	25	35,5	43,5	48	28	6,6	6	14	9	1200	0,042
27852-352028	20	27,5	35,5	48,5	48	28	6,6	6	14	9	1200	0,044
27852-352033	20	32,5	35,5	57,5	48	28	6,6	6	14	9	1200	0,047
27852-402323	22,5	22,5	38,5	38,5	48	28	6,6	6	14	9	1200	0,043
27852-402325	22,5	25	38,5	43,5	48	28	6,6	6	14	9	1200	0,044
27852-402328	22,5	27,5	38,5	48,5	48	28	6,6	6	14	9	1200	0,046
27852-402333	22,5	32,5	38,5	57,5	48	28	6,6	6	14	9	1200	0,049
27852-452525	25	25	43,5	43,5	48	28	6,6	6	14	9	1200	0,046
27852-452528	25	27,5	43,5	48,5	48	28	6,6	6	14	9	1200	0,048
27852-452533	25	32,5	43,5	57,5	48	28	6,6	6	14	9	1200	0,051
27852-502828	27,5	27,5	48,5	48,5	48	28	6,6	6	14	9	1200	0,049
27852-502833	27,5	32,5	48,5	57,5	48	28	6,6	6	14	9	1200	0,052
27852-603333	32,5	32,5	57,5	57,5	48	28	6,6	6	14	9	1200	0,055

Hinges

in plastic with clamping function



Material:
Thermoplastic hinge glass-fibre reinforced; axle in steel; clamping lever glass-fibre reinforced thermoplastic; mechanics in steel

Surface finish:
Hinge black; axle galvanized; clamping lever black; mechanics black galvanized

Sample order:
27853-251515

Note:
The hinges can be clamped in every position due to adjustable clamping lever.

On request:
Hinges with guide tabs (slot 6, 8 and 10) for aluminium profiles.
Combinations of different hinge wings.



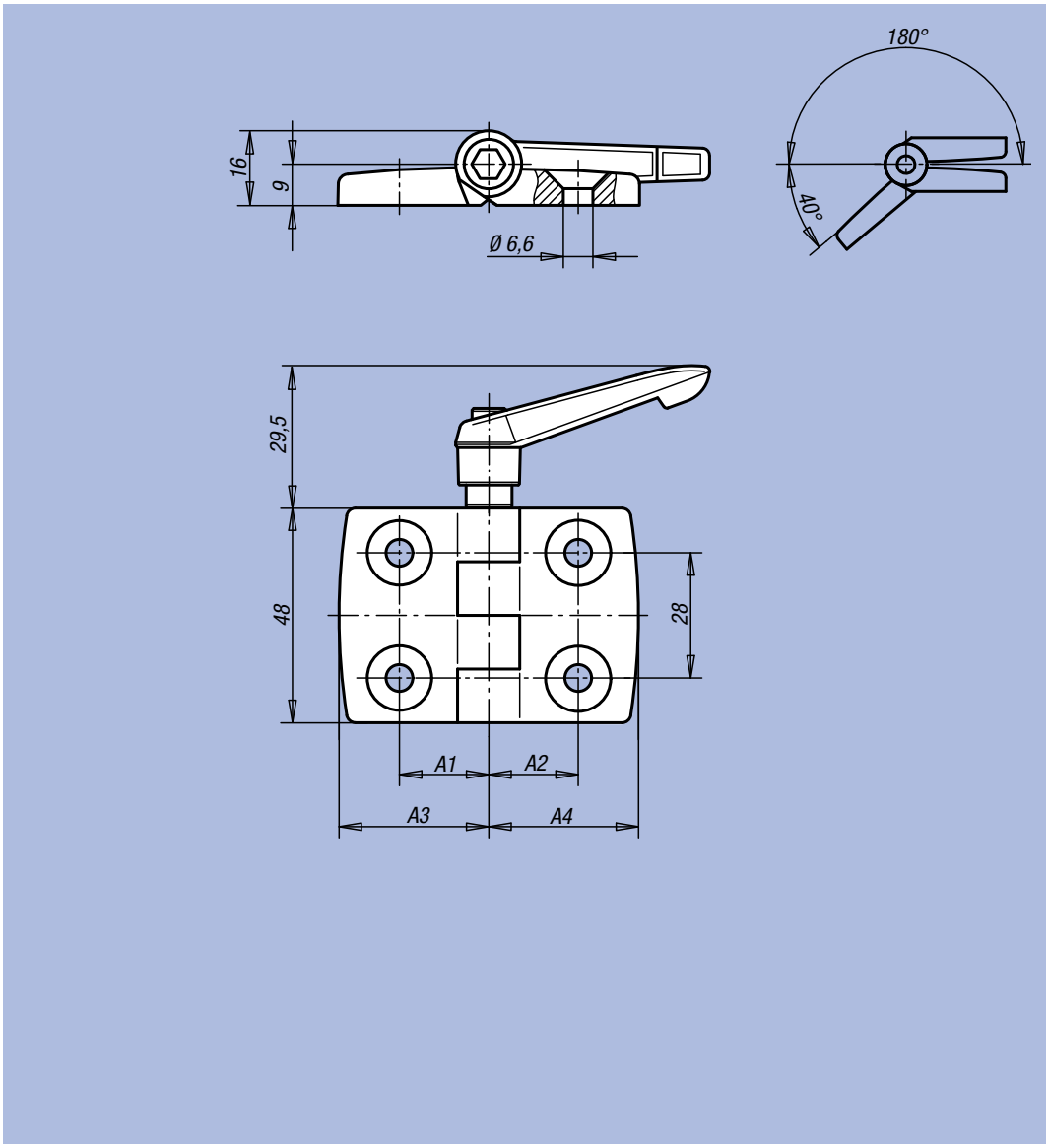

Order No.	A1	A2	A3	A4	Load bearing capacity N
27853-251515	15	15	26	26	1200
27853-301818	17,5	17,5	29,5	29,5	1200
27853-352020	20	20	36	36	1200
27853-402323	22,5	22,5	38,5	38,5	1200
27853-452525	25	25	43,5	43,5	1200
27853-502828	27,5	27,5	48,5	48,5	1200
27853-603333	32,5	32,5	57,5	57,5	1200

Hinges

with oblong holes in plastic



Material:
Glass-fibre reinforced thermoplastic;
axle in stainless steel

Surface finish:
Hinge black, axle natural finish

Sample order:
nlm 27854-402020

Note:
Horizontal adjustment of the hinges permits an optimal location.

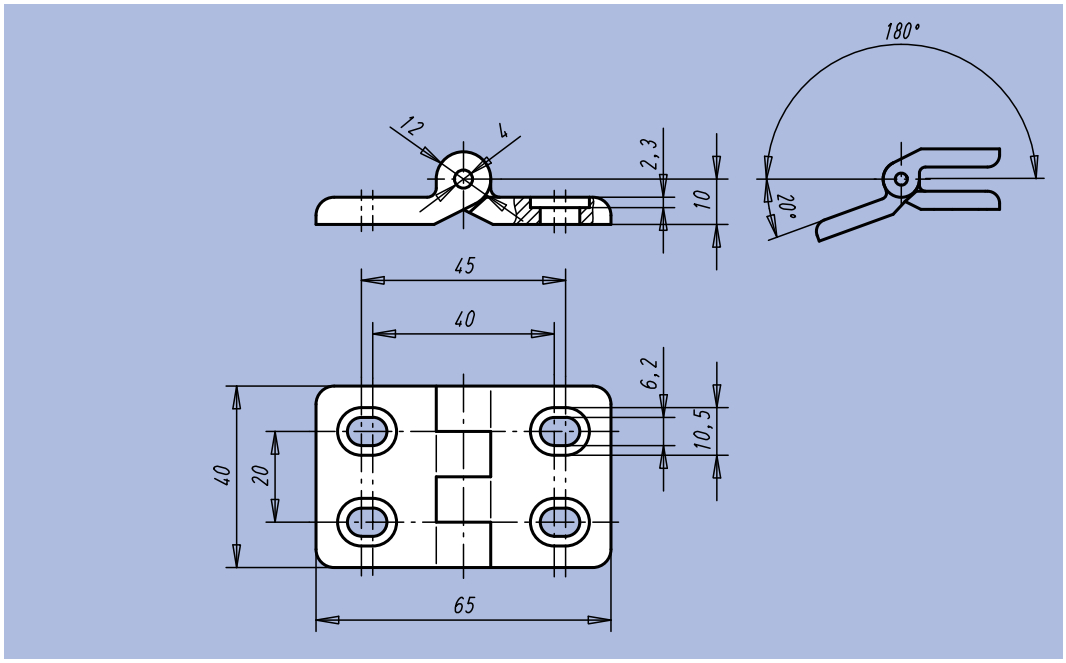

Order No.	Load bearing capacity N	kg
27854-402020	700	0,008

Hinges

with guide tabs in plastic, detachable



Material:
Glass-fibre reinforced thermoplastic;
axle in stainless steel;
washer in thermoplastic

Surface finish:
Hinge and washer black,
axle natural finish

Sample order:
nlm 27856-1322020

Note:
The hinges can be fixed in a slot (8 mm) via the guide tabs.

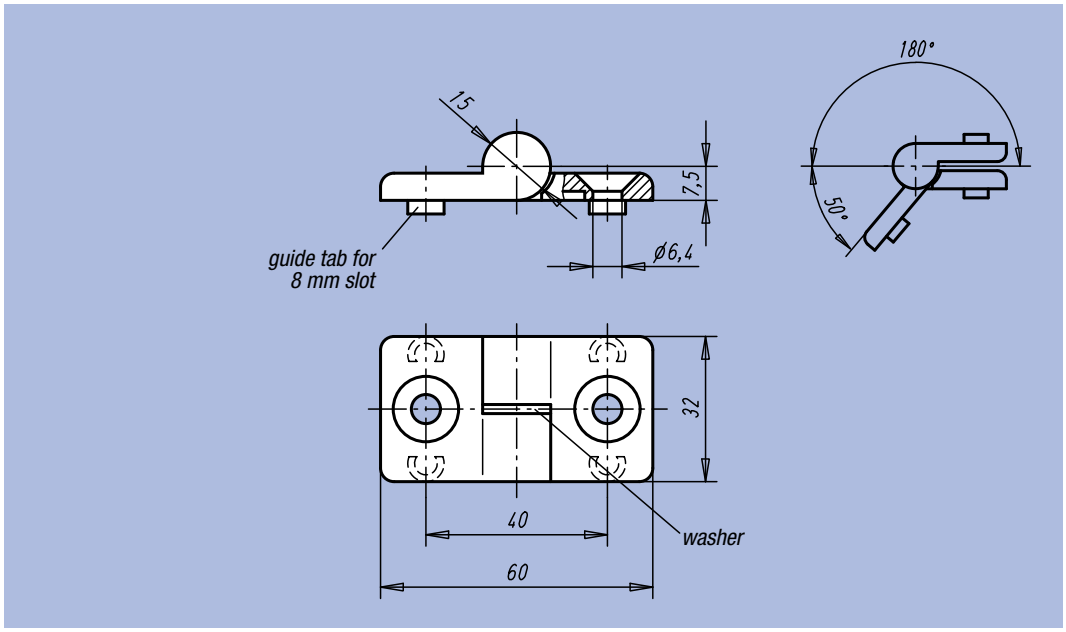

Order No.	Surface finish	Load bearing capacity N	kg
27856-1322020	left hand	700	0,021
27856-2322020	right hand	700	0,021

Hinges

in plastic with a catching function



Material:
Hinge and coverings, glass-fibre reinforced thermoplastic PA;
axle in stainless steel

Surface finish:
Hinge and coverings black;
axle natural finish

Sample order:
nlm 27857-56181800

Note:
The hinges are equipped with a catching function. It catches in four positions and holds doors and covers open and tightly closed. The hinges are available with or without guide tabs for aluminium profiles.

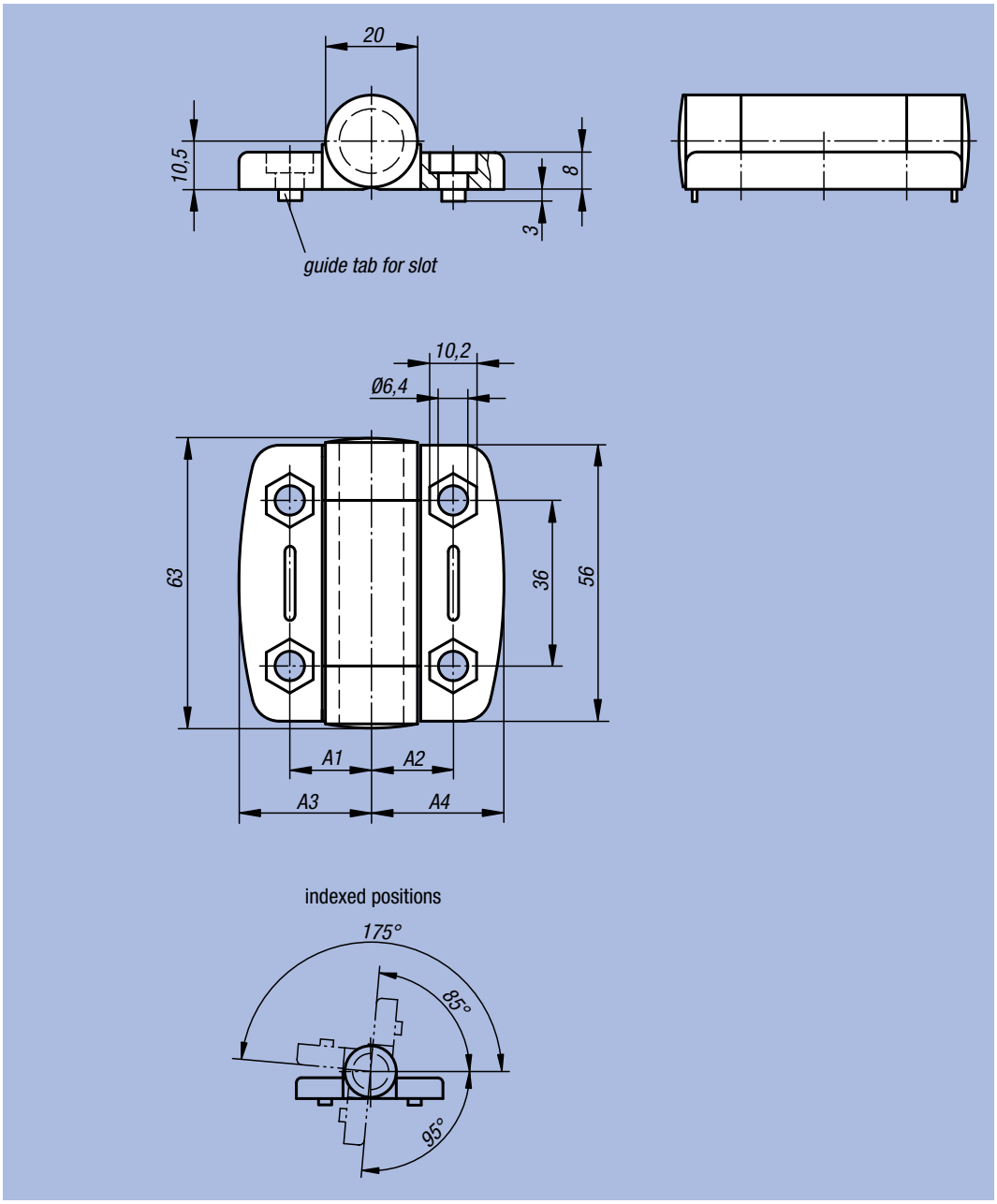

Order No.	A1	A2	A3	A4	Guide tabs for slot	Load bearing capacity N	kg
27857-56181800	17,75	17,75	27	27	-	1200	0,073
27857-56181806	17,75	17,75	27	27	6	1200	0,073
27857-56181808	17,75	17,75	27	27	8	1200	0,073
27857-56232300	22,75	22,75	36,75	36,75	-	1200	0,093
27857-56232308	22,75	22,75	36,75	36,75	8	1200	0,093
27857-56232310	22,75	22,75	36,75	36,75	10	1200	0,093

Hinges

in plastic with adjustable friction



Material:
Hinge and coverings, glass-fibre reinforced thermoplastic PA;
steel parts in stainless steel

Surface finish:
Hinge and coverings black;
steel parts natural finish

Sample order:
nlm 27858-56181800

Note:
The friction hinges allow door positioning in any angular position desired. Friction resistance can be continuously adjusted by means of an adjusting screw of 0-5 Nm. The hinges are available with or without guide tabs for aluminium profiles.



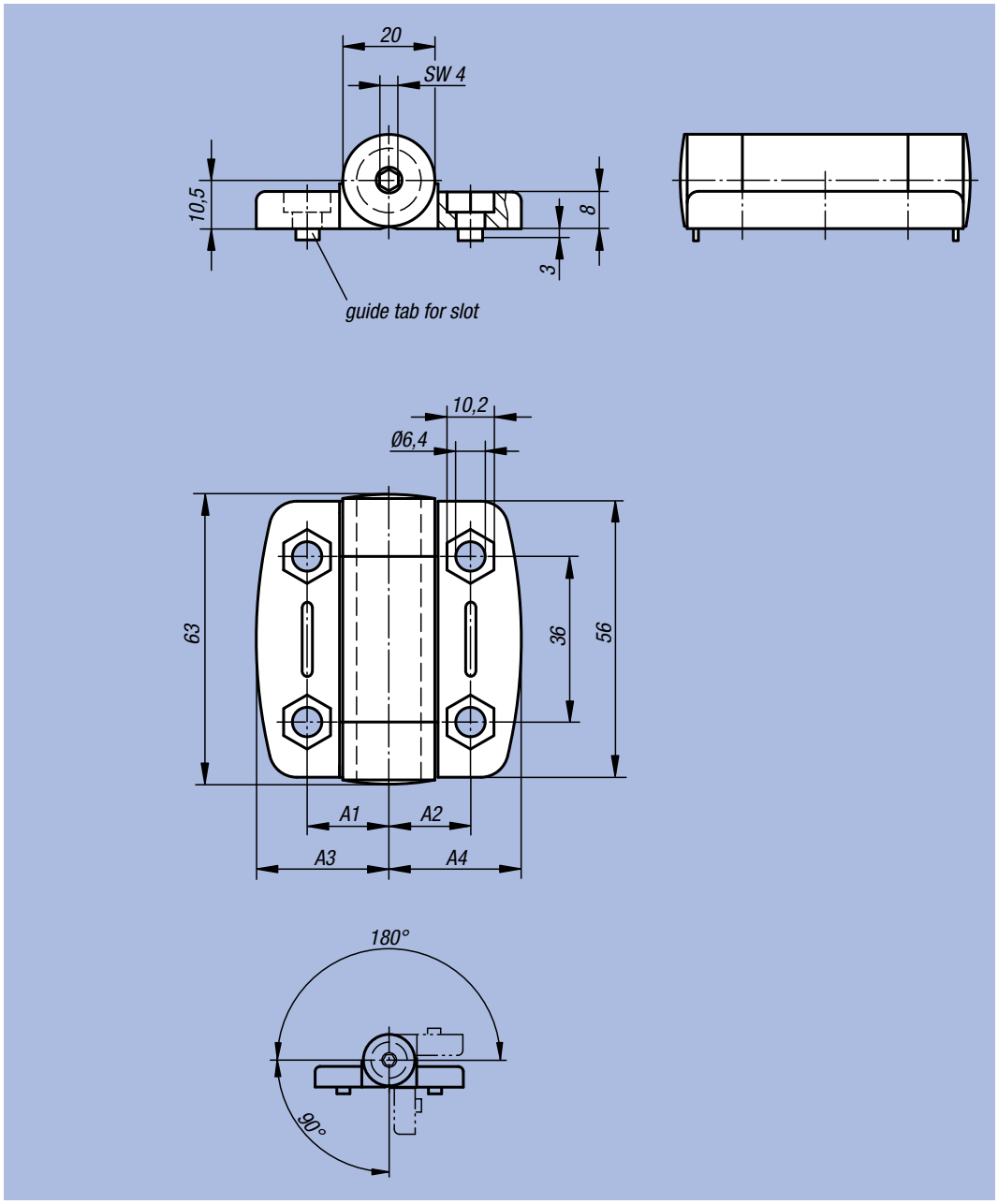

Order No.	A1	A2	A3	A4	Guide tabs for slot	Load bearing capacity N	kg
27858-56181800	17,75	17,75	27	27	-	1200	0,052
27858-56181806	17,75	17,75	27	27	6	1200	0,052
27858-56181808	17,75	17,75	27	27	8	1200	0,052
27858-56232300	22,75	22,75	36,75	36,75	-	1200	0,064
27858-56232308	22,75	22,75	36,75	36,75	8	1200	0,064
27858-56232310	22,75	22,75	36,75	36,75	10	1200	0,064

Hinges

with oblong holes in die cast zinc



Material:
Die cast zinc; axle stainless steel; washers thermoplastic

Surface finish:
Hinge black powder-coated; axle natural finish; washers black

Sample order:
nlm 27865-402020

Note:
Horizontal adjustment of the hinges permits an optimal location.

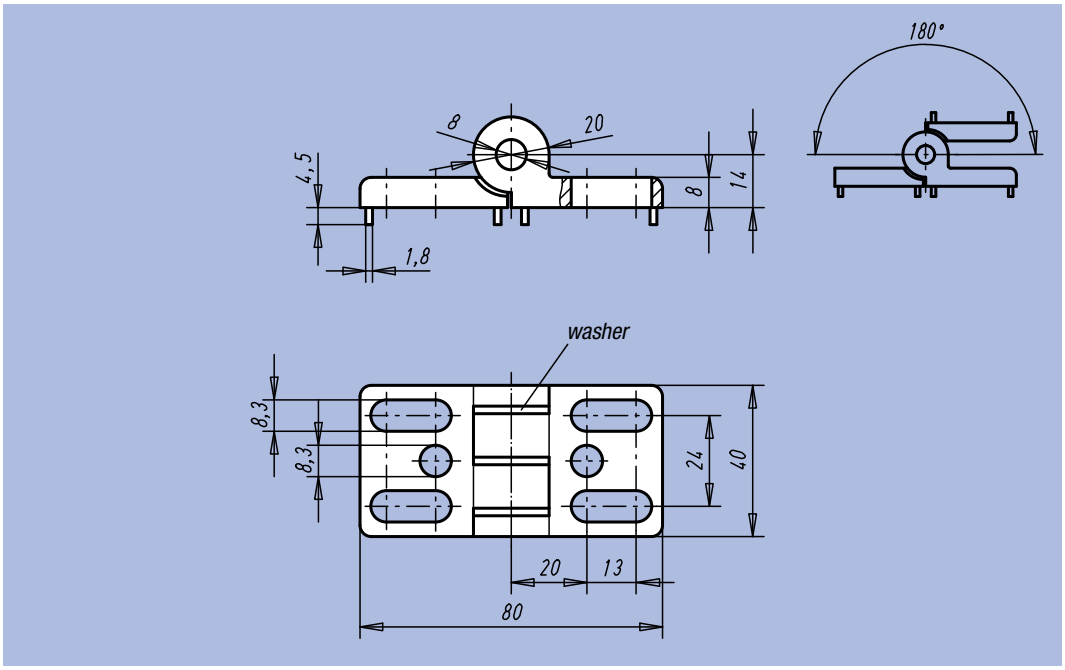

Order No.	Guide tabs for slot	Load bearing capacity N	kg
27865-402020	-	2500	0,175
27865-40202008	8	2500	0,175
27865-40202010	10	2500	0,175

Hinges

in die cast zinc with clamping function



Material:
Hinge in die cast zinc; axle in steel; clamping lever glass-fibre reinforced thermoplastic; mechanics in steel

Surface finish:
Hinge black powder-coated;
axle galvanized;
clamping lever black;
mechanics black galvanized

Sample order:
27868-40232300

Note:
The hinges can be clamped in every position due to adjustable clamping lever.
The hinges are available with or without guide tabs for aluminium profiles.

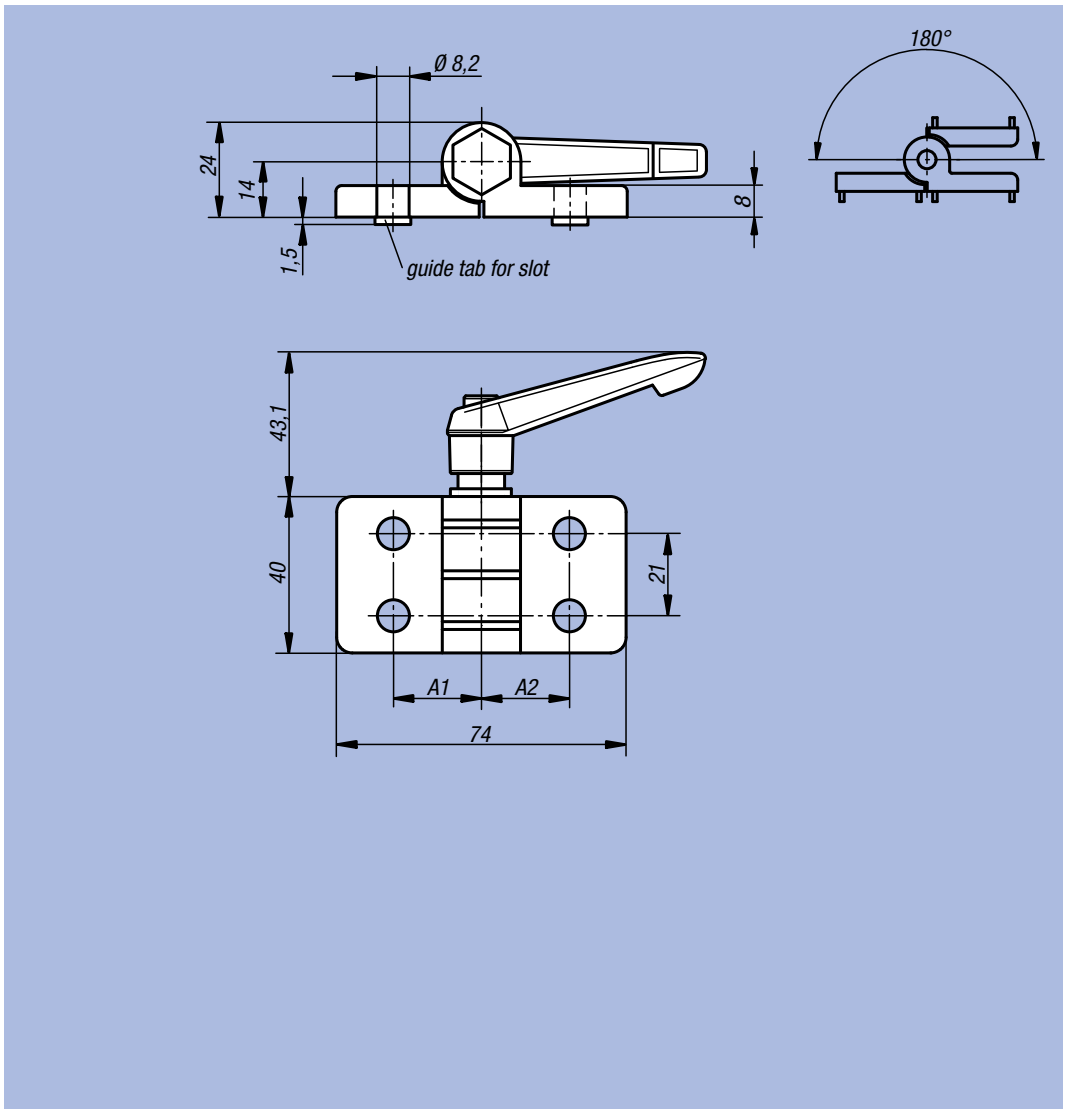



Order No.	A1	A2	Guide tabs for slot	Load bearing capacity N
27868-40232300	22,5	22,5	-	2500
27868-40232308	22,5	22,5	8	2500
27868-40232310	22,5	22,5	10	2500
27868-40232500	22,5	25	-	2500
27868-40232508	22,5	25	8	2500
27868-40232510	22,5	25	10	2500
27868-45252500	25	25	-	2500
27868-45252508	25	25	8	2500
27868-45252510	25	25	10	2500

Hinges

in aluminium, detachable, left



Material:
Pressure-cast aluminium;
axle in stainless steel

Surface finish:
Hinge matt galvanized;
axle natural finish

Sample order:
nlm 27870-1251515

Note:
Hinges for surface elements and aluminium profiles.

On request:
Hinges with guide tabs (slot 5, 6, 8, 10, 12 and 14) for aluminium profiles.
Combinations of different wing lengths.

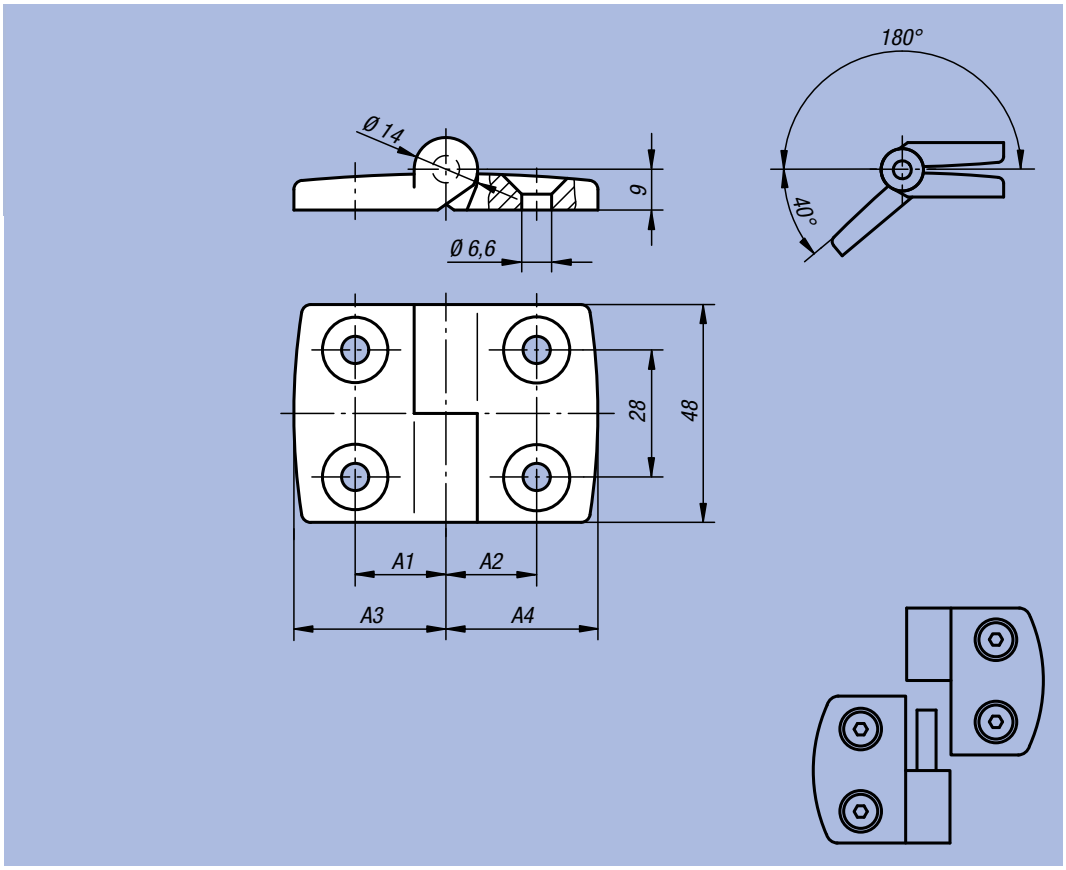

Order No.	A1	A2	A3	A4	Load bearing capacity N	kg
27870-1251515	15	15	26	26	1500	0,056
27870-1301818	17,5	17,5	29,5	29,5	1500	0,064
27870-1352020	20	20	36	36	1500	0,072
27870-1402323	22,5	22,5	38,5	38,5	1500	0,068
27870-1452525	25	25	43,5	43,5	1500	0,070
27870-1502828	27,5	27,5	48,5	48,5	1500	0,078
27870-1603333	32,5	32,5	57,5	57,5	1500	0,088

Hinges

in aluminium, detachable, right



Material:
Pressure-cast aluminium;
axle in stainless steel

Surface finish:
Hinge matt galvanized;
axle natural finish

Sample order:
nlm 27870-2251515

Note:
Hinges for surface elements and aluminium profiles.

On request:
Hinges with guide tabs (slot 5, 6, 8, 10, 12 and 14) for aluminium profiles.
Combinations of different wing lengths.

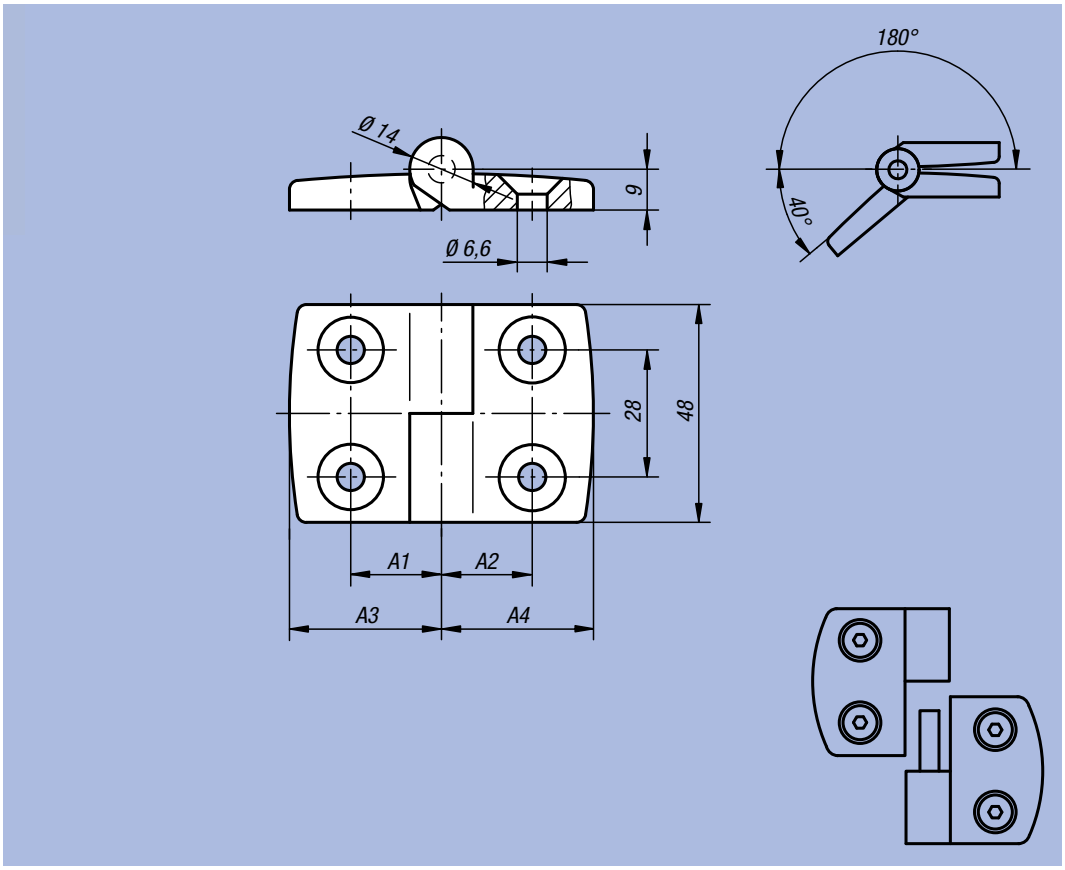

Order No.	A1	A2	A3	A4	Load bearing capacity N	kg
27870-2251515	15	15	26	26	1500	0,056
27870-2301818	17,5	17,5	29,5	29,5	1500	0,064
27870-2352020	20	20	36	36	1500	0,072
27870-2402323	22,5	22,5	38,5	38,5	1500	0,068
27870-2452525	25	25	43,5	43,5	1500	0,070
27870-2502828	27,5	27,5	48,5	48,5	1500	0,078
27870-2603333	32,5	32,5	57,5	57,5	1500	0,088

Hinges

in aluminium



Material:
Pressure-cast aluminium;
axle in stainless steel

Surface finish:
Hinge matt galvanized;
axle natural finish

Sample order:
nlm 27872-251515

Note:
Hinges for surface elements and aluminium profiles, not detachable.

On request:
Hinges with guide tabs (slot 5, 6, 8, 10, 12 and 14) for aluminium profiles.
Combinations of different wing lengths.

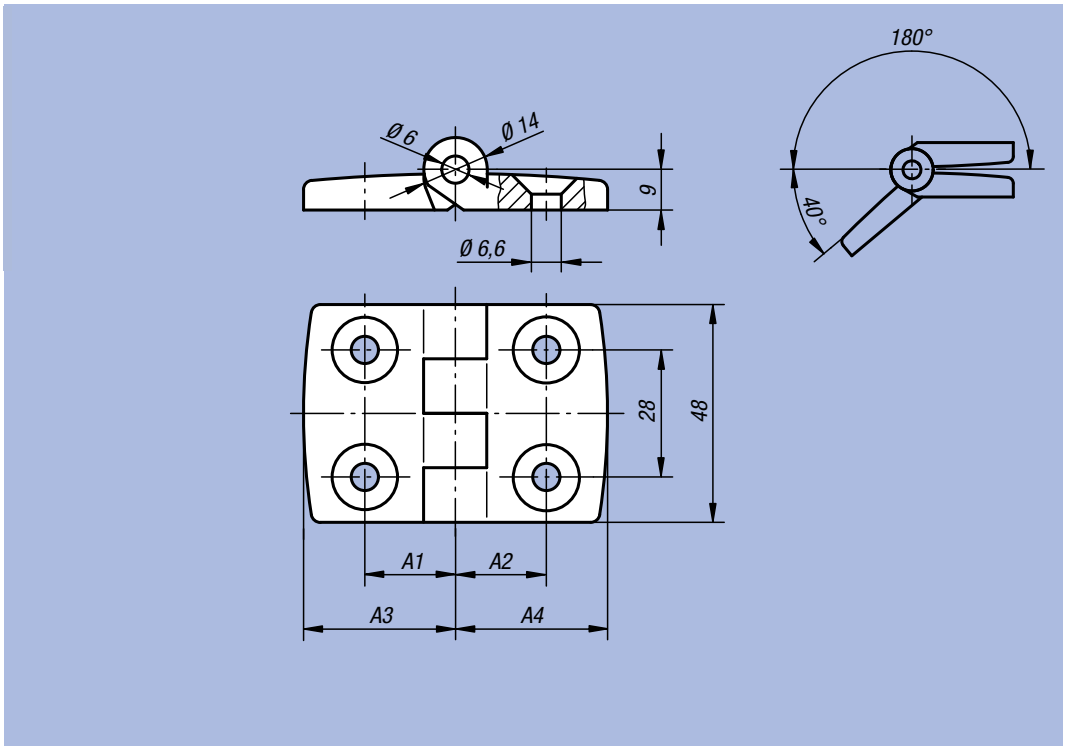

Order No.	A1	A2	A3	A4	Load bearing capacity N	kg
27872-251515	15	15	26	26	2500	0,057
27872-301818	17,5	17,5	29,5	29,5	2500	0,065
27872-352020	20	20	36	36	2500	0,073
27872-402323	22,5	22,5	38,5	38,5	2500	0,069
27872-452525	25	25	43,5	43,5	2500	0,073
27872-502828	27,5	27,5	48,5	48,5	2500	0,079
27872-603333	32,5	32,5	57,5	57,5	2500	0,089

28000

Oil Level Gauges
Plugs
Screw Plugs
Vent Screws
Dipsticks
Filler Neck



Oil Level Gauges



Material, surface finish:
Housing in polyamide, transparent, high mechanical stability, non-ageing, temperature resistant with oil up to 100 °C, with water up to 70 °C;
O-ring and flat packing in rubber (NBR); reflector in aluminium, painted white; graduation and scale marks black; screw, hexagon nut and washer in galvanized steel

Sample order:
nlm 28000-1127

Note:
The Oil Level Gauges can either be fastened as shown in the illustration or directly in the threaded hole.
Centre distance for the fastening holes = L1 ±0.5.

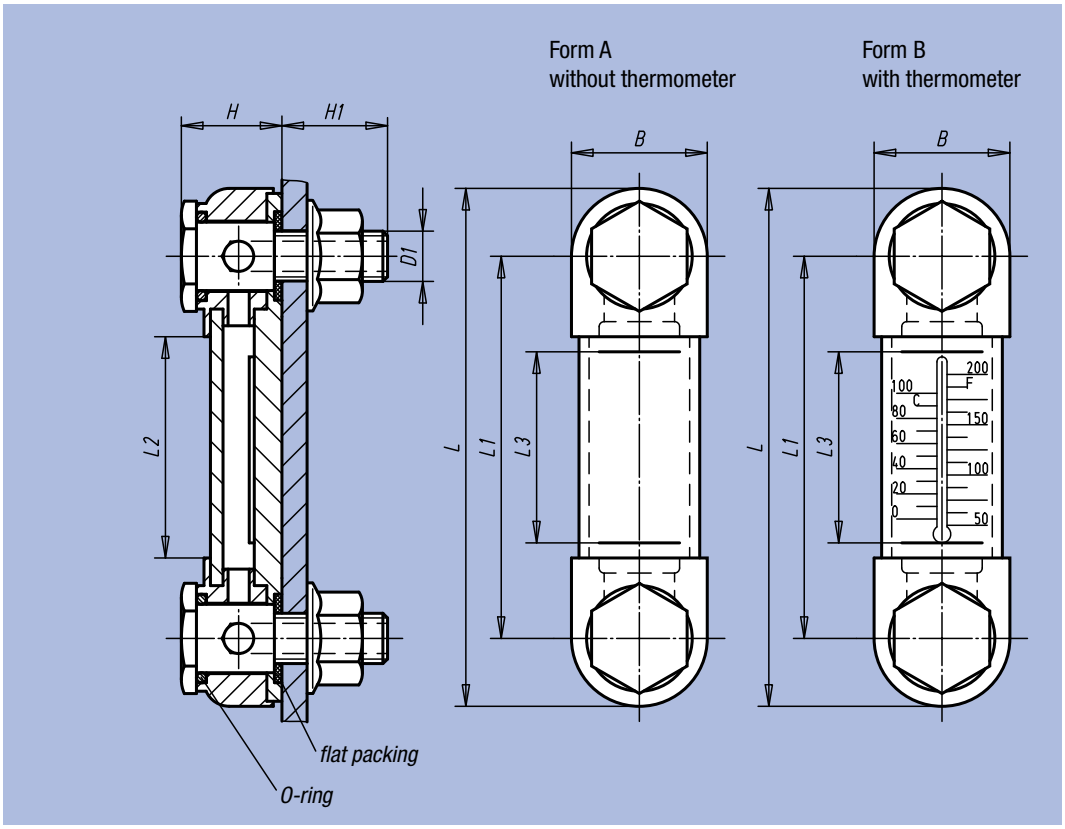

Order No.	Form	B	D1	H	H1	L	L1	L2	L3	Number of fastening screws	Thermometer scale	kg
28000-1076	A	27	M10	20	21	103	76	44	37	2	-	0,123
28000-1127	A	24	M12	19	18	151	127	95	80	2	-	0,186
28000-1210	A	41	M12	26	19	250	210	182	168		-	0,298
28000-2076	B	27	M10	20	21	103	76	44	37	2	0 - 100 °C / 50 - 200 °F	0,123
28000-2127	B	24	M12	19	18	151	127	95	80	2	0 - 100 °C / 50 - 200 °F	0,186

Oil Level Gauges



Material, surface finish:
Housing in steel, black paint finish; sight glass in polyamide, transparent, high mechanical stability, non-ageing, temperature resistant with oil up to 100 °C, with water up to 70 °C; O-ring in rubber (NBR); reflector in aluminium, painted white; graduation and scale marks black; screw, hexagon nut and washer in galvanized steel

Sample order:
nlm 28000-107610

Note:
The Oil Level Gauges can either be fastened as shown in the illustration or directly in the threaded hole.
Centre distance for the fastening holes = L1 ±0.5.
The Oil Level Gauges are suitable for tanks operating without pressure.
Maximum operating temperature: 100 °C.

The versions 28000-125412 and 28000-225412 have a housing in aluminium.

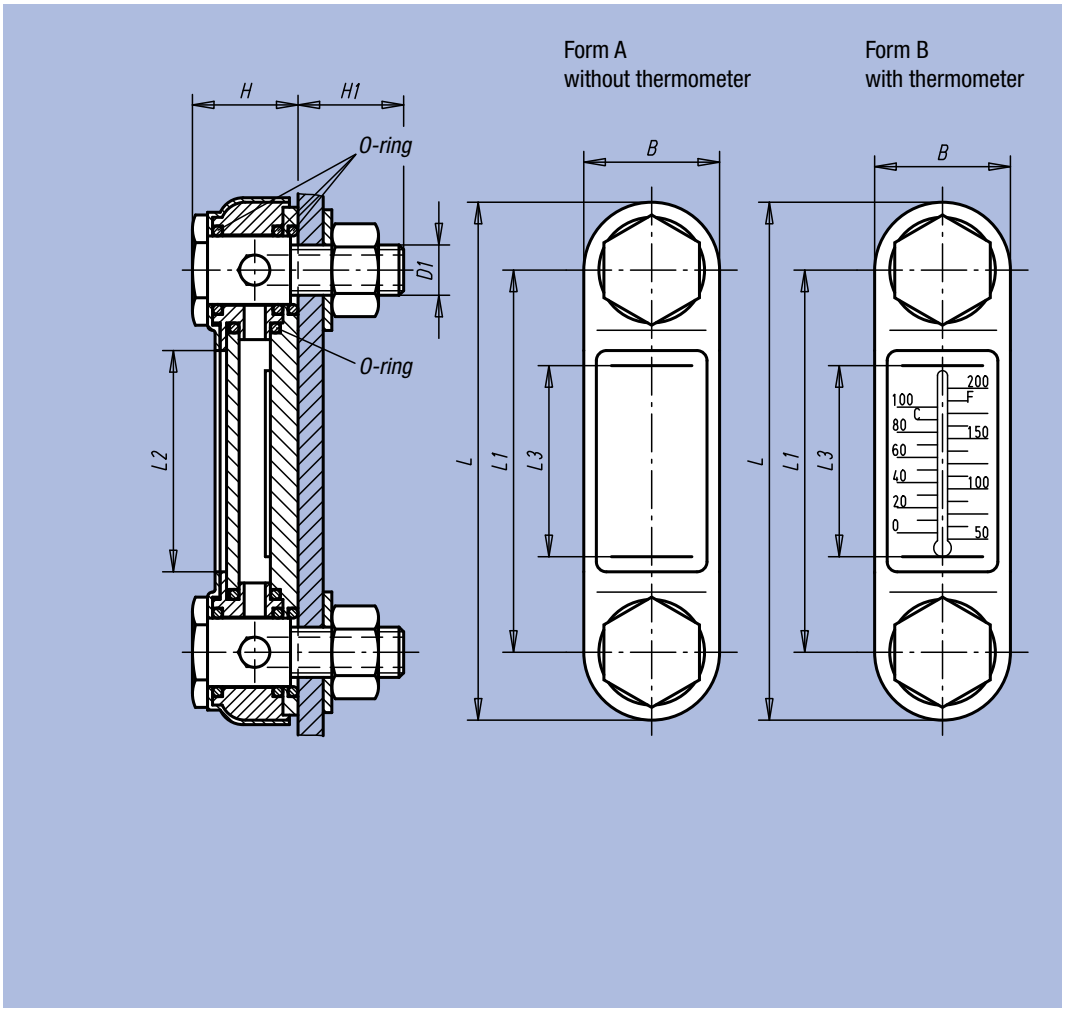

Order No.	Form	B	D1	H	H1	L	L1	L2	L3	Number of fastening screws	Thermometer scale	kg
28000-107610	A	31	M10	21	17	107	76	39	37	2	-	0,150
28000-107612	A	31	M12	21	20	107	76	39	37	2	-	0,150
28000-112710	A	31	M10	21	17	156	127	90	80	2	-	0,180
28000-112712	A	31	M12	21	20	156	127	90	80	2	-	0,180
28000-125412	A	34	M12	26	27	280	254	213	204	2	-	0,240
28000-207610	B	31	M10	21	17	107	76	39	37	2	0 - 100 °C / 50 - 200 °F	0,150
28000-207612	B	31	M12	21	20	107	76	39	37	2	0 - 100 °C / 50 - 200 °F	0,150
28000-212710	B	31	M10	21	17	156	127	90	80	2	0 - 100 °C / 50 - 200 °F	0,180
28000-212712	B	31	M12	21	20	156	127	90	80	2	0 - 100 °C / 50 - 200 °F	0,180
28000-225412	B	34	M12	26	27	280	254	213	204	2	-10 - 80 °C / 20 - 180 °F	0,240

Oil Level Sight Glasses



Material, surface finish:
Housing in polyamide, transparent, high mechanical stability, non-ageing, temperature resistant with oil up to 100 °C, with water up to 70 °C; resistant to solvents but not to alcohol; flat packing asbestos-free; reflector in white plastic

Sample order:
nlm 28004-143100

On request:
Rubber gasket (NBR).

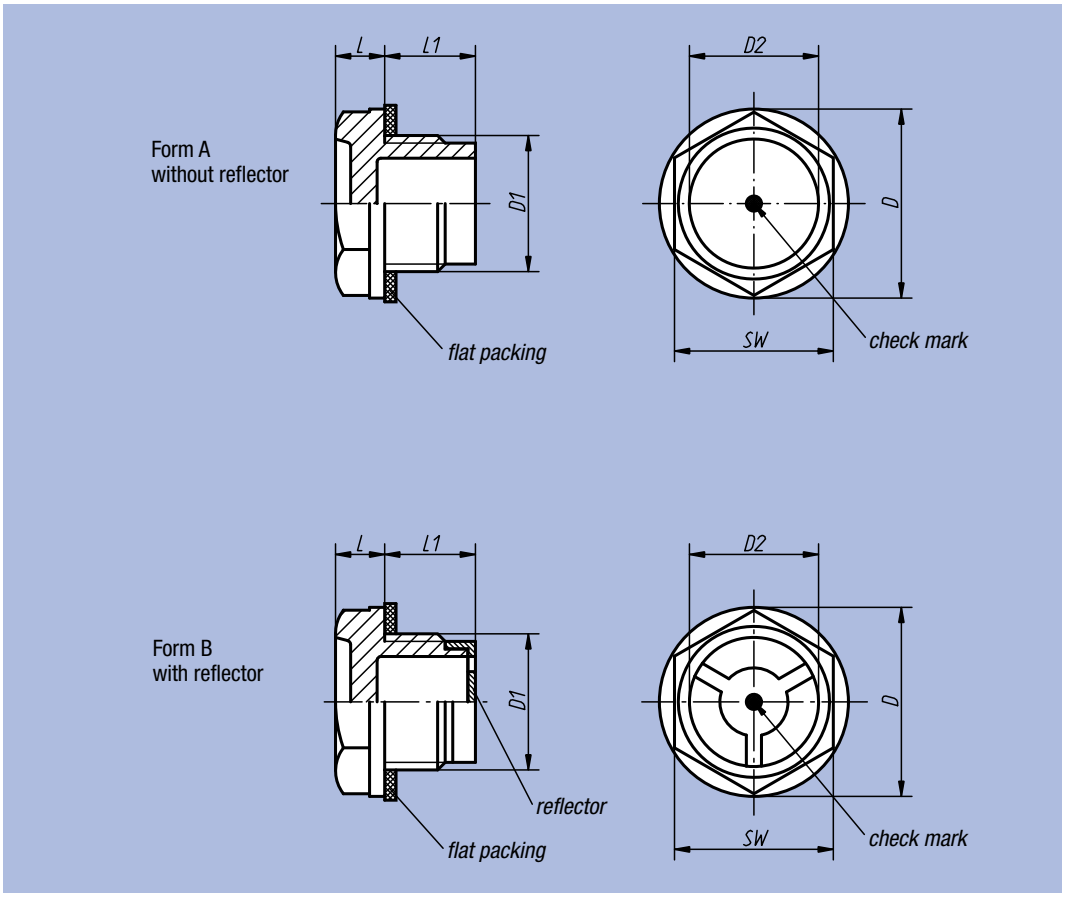

Order No.	Form	D	D1	D2	L	L1	SW	Tightening torque max. Nm	kg
28004-120014	A	20	G 1/4	15	7	8	17	6	0,002
28004-122038	A	22	G 3/8	14	6,5	10,5	18	8	0,004
28004-128012	A	28	G 1/2	16	8	11	24	12	0,006
28004-135034	A	35	G 3/4	21	8	12	30	16	0,008
28004-143100	A	43	G 1	32	11	12	36	-	0,012
28004-151114	A	51	G 1 1/4	33	10	16	42	-	0,020
28004-158112	A	58	G 1 1/2	40	12	16	50	-	0,026
28004-174200	A	74	G 2	48	12	22	64	-	0,052
28004-1201415	A	20	M14x1,5	15	7	8	17	7	0,002
28004-1221615	A	22	M16x1,5	14	6,5	10	18	8	0,003
28004-1251815	A	25	M18x1,5	16	7	10,5	21	10	0,003
28004-1282015	A	28	M20x1,5	18	7,5	11	24	16	0,004
28004-222038	B	22	G 3/8	14	6,5	10,5	18	8	0,004
28004-228012	B	28	G 1/2	16	8	11	24	12	0,006
28004-235034	B	35	G 3/4	21	8	12	30	16	0,008
28004-243100	B	43	G 1	32	11	12	36	-	0,012
28004-251114	B	51	G 1 1/4	33	10	16	42	-	0,020
28004-258112	B	58	G 1 1/2	40	12	16	50	-	0,026
28004-274200	B	74	G 2	48	12	22	64	-	0,052
28004-2221615	B	22	M16x1,5	14	6,5	10	18	8	0,003
28004-2251815	B	25	M18x1,5	16	7	10,5	21	10	0,003
28004-2282015	B	28	M20x1,5	18	7,5	11	24	16	0,004

Press-In Oil Level Sight Glasses



Material, surface finish:
Housing in polyamide, transparent, high mechanical stability, non-ageing, temperature resistant with oil up to 100 °C, with water up to 70 °C; resistant to solvents but not to alcohol; O-ring in rubber (NBR); reflector in white plastic

Sample order:
nlm 28006-3026

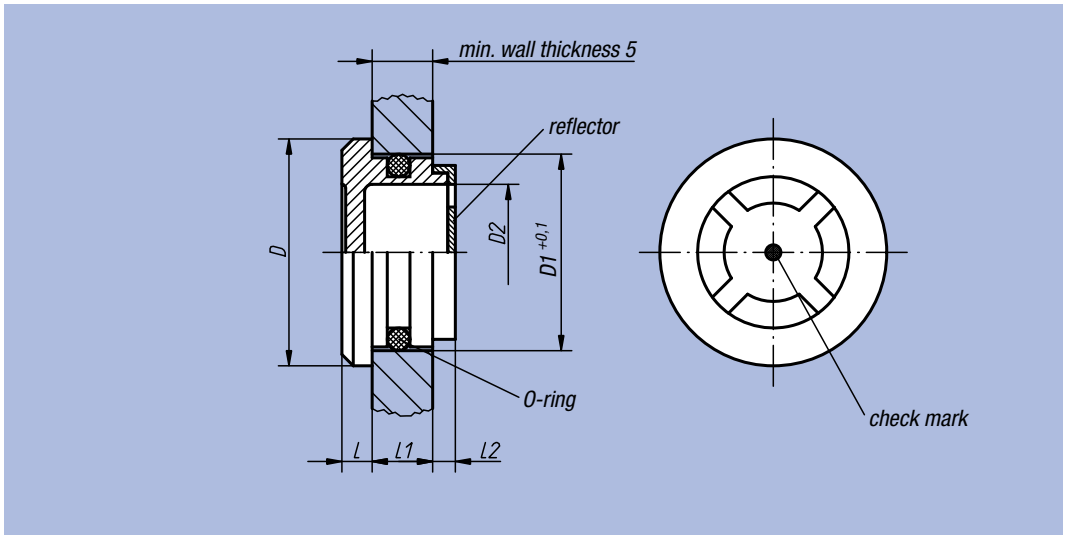

Order No.	D	drill-Ø D1	D2	L	L1	L2	kg
28006-2420	24	20	14	4	7	3	0,003
28006-3026	30	26	20	4	8	3,5	0,004
28006-3632	36	32	24	4	9	4	0,008
28006-4238	42	38	30	4	10	4	0,010
28006-4440	44	40	32	4	10	4	0,012

Dome Oil Level Sight Glasses



Material, surface finish:
Housing in polyamide, transparent, high mechanical stability, non-ageing, temperature resistant with oil up to 100 °C, with water up to 70 °C; resistant to solvents but not to alcohol; flat packing asbestos-free

Sample order:
nlm 28008-28012

On request:
Rubber gasket (NBR).

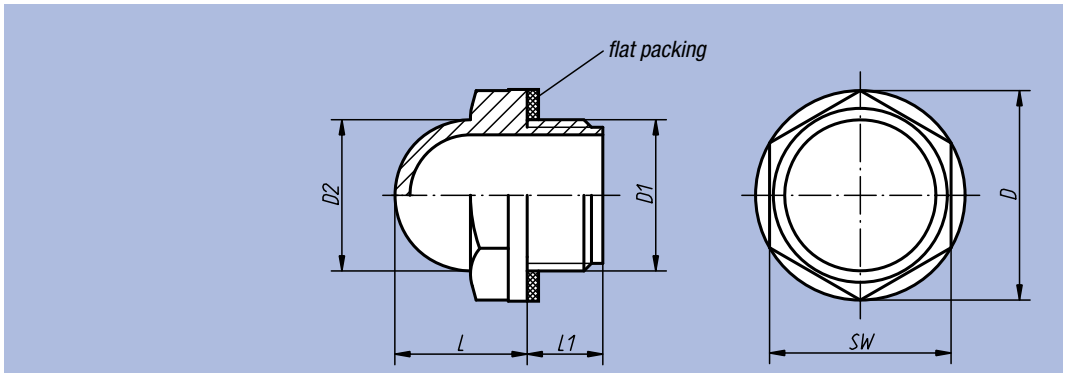

Order No.	D	D1	D2	L	L1	SW	Tightening torque max. Nm	kg
28008-22038	22	G 3/8	15	14	10	19	8	0,004
28008-28012	28	G 1/2	20	17	10	24	12	0,006
28008-35034	35	G 3/4	25	20	10	30	16	0,008
28008-42100	42	G 1	31	24	10,5	36	20	0,016

Aluminium Oil Level Sight Glasses



Material, surface finish:
Housing in aluminium;
reflector in aluminium or white plastic;
sight glass in polyamide, transparent, temperature resistant with oil up to 100 °C, with water up to 70 °C;
flat packing asbestos-free

Sample order:
nlm 28010-29012

Note:
With models 28010-36034 and 28010-42100 the reflector is made in white plastic.

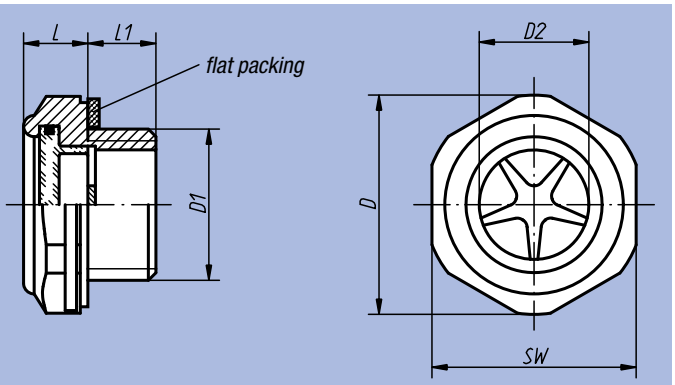

Order No.	D	D1	D2	L	L1	SW	Tightening torque max. Nm	Pressure load max. bar	kg
28010-20014	20	G 1/4	11	8	7,5	18	9	10	0,004
28010-24038	24,5	G 3/8	12	8	9	22	12	10	0,008
28010-29012	29,5	G 1/2	15	8	9	27	18	10	0,013
28010-36034	34,5	G 3/4	19	10,7	10,9	32	24	10	0,022
28010-42100	42,5	G 1	27	10,5	11	40	-	10	0,033

Screw-In Protection Plugs



Material:
Elastomer, soft polyurethane

Surface finish:
Red

Sample order:
nlm 28018-038

Note:
The double-lip seal guarantees to withstand pressure of 2-3 bar. Furthermore, it keeps paint out during painting.

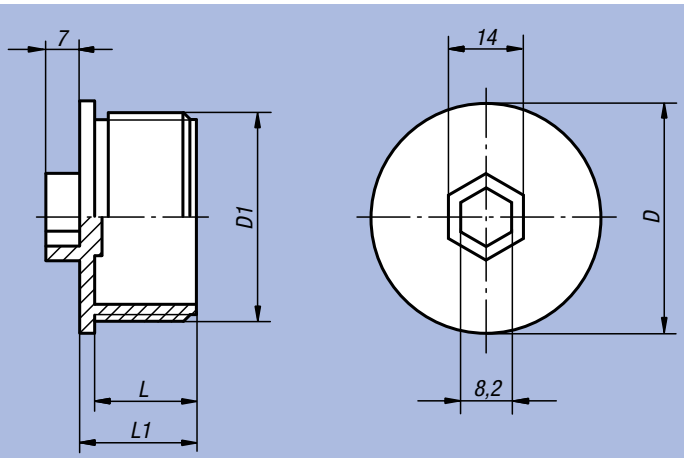

Order No.	D	D1	L	L1	kg
28018-018	16,2	G 1/8	8	10	0,001
28018-014	18,1	G 1/4	9,9	12,5	0,002
28018-038	21	G 3/8	9	11	0,002
28018-012	25,2	G 1/2	11	14	0,004
28018-034	31,3	G 3/4	11,5	14	0,006
28018-100	36	G 1	12	15,5	0,008

Screw-In Plugs



Material:
Thermoplast, Polyamid 66.

Surface finish:
Black, flat packing asbestos-free

Sample order:
nlm 28020-22038

Note:
Temperature resistant with oil up to 100 °C, with water up to 70 °C.

On request:
O-ring or materials with higher stability and temperature resistance (150 °C).

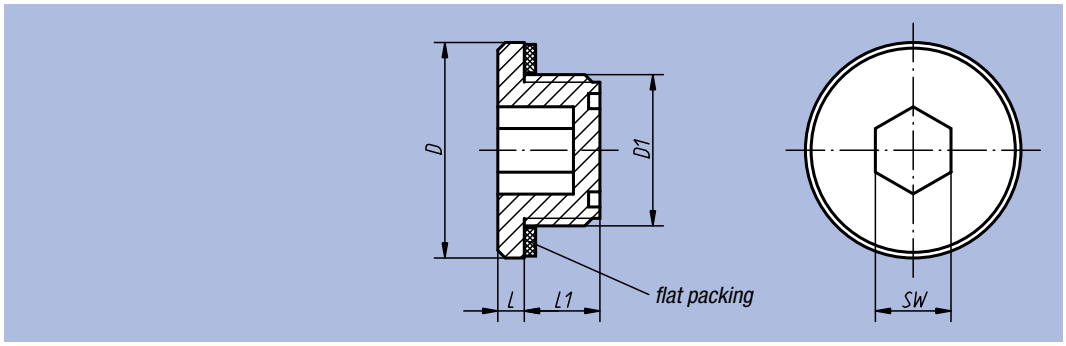

Order No.	D	D1	L	L1	SW	Tightening torque max. Nm	kg
28020-18014	18,2	G 1/4	2,5	8	6	3	0,002
28020-22038	22,5	G 3/8	3,5	10,5	8	6	0,004
28020-28012	28,5	G 1/2	3,5	10,5	10	8	0,006
28020-35034	35	G 3/4	4	10,5	12	10	0,010
28020-201415	20	M14x1,5	2,5	8	6	3	0,002
28020-221615	22,5	M16x1,5	3,5	11	8	6	0,004
28020-261815	26	M18x1,5	3	10	10	7	0,004
28020-282015	28,5	M20x1,5	3	11	10	7	0,006
28020-282215	28,5	M22x1,5	3,5	10,5	10	7	0,006
28020-352615	35	M26x1,5	3	12	12	10	0,010

Press-In Plugs



Material, surface finish:
Housing in black thermoplastic polyamide 66;
cap in red thermoplastic polyamide 66;
air filter in polyurethane (PU foam), filter fineness 50 µm;
O-ring in rubber (NBR)

Sample order:
nlm 28022-33030

Note:
Temperature resistant with oil up to 100 °C, with water up to 70 °C.

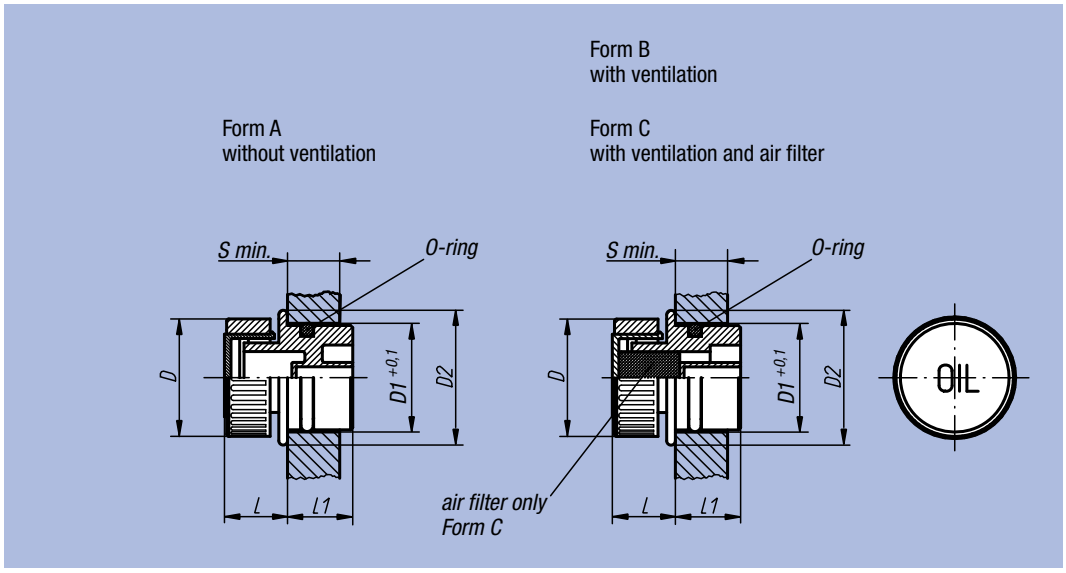

Order No. Form A	Order No. Form B	Order No. Form C	D	drill-Ø D1	D2	L	L1	S min.	kg
28022-13018	28022-23018	28022-33018	30	18	23	14	14	8	0,006
28022-13020	28022-23020	28022-33020	30	20	24	14	15,5	8	0,008
28022-13026	28022-23026	28022-33026	30	26	30	14	16,5	9,5	0,010
28022-13030	28022-23030	28022-33030	30	30	34	14	17	9,5	0,012

Plastic Plugs



Material:
Thermoplastic polyamide 66, permanent magnet in ferrite

Surface finish:
Black, flat packing asbestos-free

Sample order:
nlm 28024-22038

Note:
Temperature resistant with oil up to 100 °C, with water up to 70 °C.

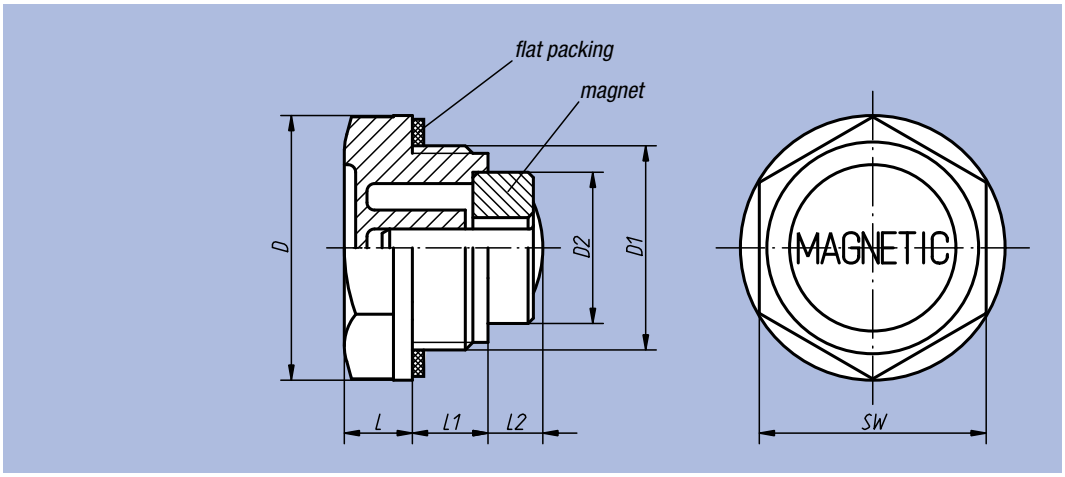

Order No.	D	D1	D2	L	L1	L2	SW	kg
28024-20014	20	G 1/4	8	7	9	5	17	0,004
28024-22038	22	G 3/8	13	7,5	10	10	18	0,010
28024-27012	27	G 1/2	13	8	11	9	24	0,012
28024-34034	34	G 3/4	19,6	9	11	6,5	30	0,020
28024-42100	42	G 1	19,6	10,5	12	14	35	0,040
28024-201415	20	M14x1,5	8	7	9	5	17	0,004

Aluminium Plugs



Material:
Aluminium, permanent magnet in ferrite

Surface finish:
Natural finish, flat packing asbestos-free

Sample order:
nlm 28026-24038

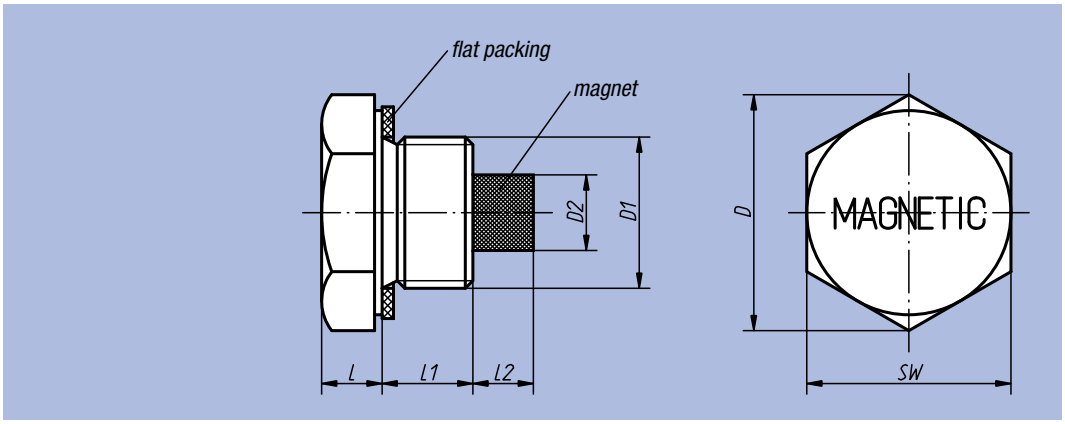

Order No.	D	D1	D2	L	L1	L2	SW	kg
28026-21014	21	G 1/4	5	7	10	6	19	0,010
28026-24038	24,5	G 3/8	8	7	10	7	22	0,014
28026-30012	30	G 1/2	10	8	10	7	27	0,028
28026-36034	36,5	G 3/4	13	8	10	7	34	0,040
28026-42100	42,5	G 1	13	8	14	7	40	0,062

Hexagon Screw Plugs



Material:
Thermoplastic polyamide 66

Surface finish:
Black, flat packing asbestos-free

Sample order:
nlm 28028-142100

Note:
Temperature resistant with oil up to 100 °C, with water up to 70 °C.

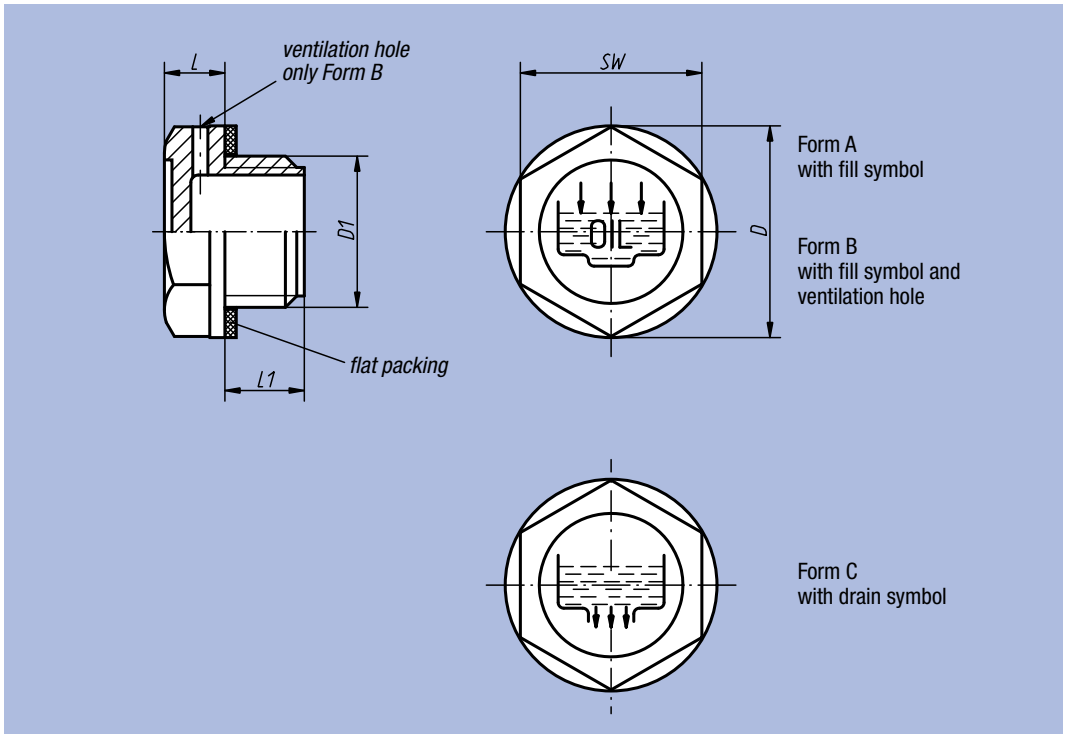

Order No. Form A	Order No. Form B	Order No. Form C	D	D1	L	L1	SW	Tightening torque max. Nm	kg
28028-119014	28028-219014	28028-319014	19,5	G 1/4	7	9	17	5	0,002
28028-122038	28028-222038	28028-322038	22	G 3/8	7,5	10	18	8	0,004
28028-128012	28028-228012	28028-328012	28	G 1/2	7,5	11	24	9	0,006
28028-134034	28028-234034	28028-334034	34	G 3/4	9	11	30	11	0,008
28028-142100	28028-242100	28028-342100	42	G 1	10,5	12	35	-	0,018
28028-151114	28028-251114	28028-351114	51	G 1 1/4	12	13,5	42	-	0,026
28028-158112	28028-258112	28028-358112	58	G 1 1/2	10	14,5	50	-	0,030
28028-174200	28028-274200	28028-374200	74	G 2	13,5	16	64	-	0,054
28028-1191415	28028-2191415	28028-3191415	19,5	M14x1,5	7	9	17	5	0,002
28028-1211615	28028-2211615	28028-3211615	21	M16x1,5	7,5	10	18	6	0,004
28028-1261815	28028-2261815	28028-3261815	26	M18x1,5	7,5	10	21	7	0,004
28028-1282015	28028-2282015	28028-3282015	28	M20x1,5	8	10	24	8	0,006
28028-1282215	28028-2282215	28028-3282215	28	M22x1,5	8	11	24	10	0,006

Screw Plugs



Material:
Thermoplastic polyamide 66;
O-ring in rubber (NBR)

Surface finish:
Black

Sample order:
nlm 28030-128012

Note:
Temperature resistant with oil up to 100 °C, with water up to 70 °C.

Form A
with fill symbol

Form B
with fill symbol and
ventilation hole

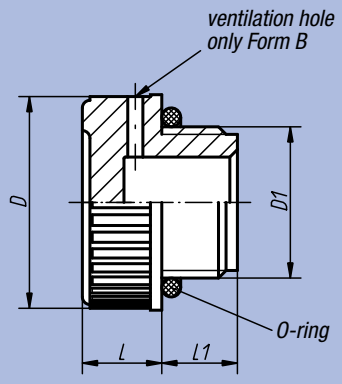

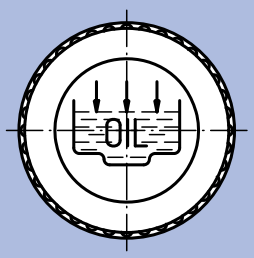

Order No.	Form	D	D1	L	L1	kg
28030-120014	A	20	G 1/4	9	9	0,004
28030-120038	A	20,5	G 3/8	9	10	0,004
28030-128012	A	28	G 1/2	10,5	10,5	0,008
28030-131034	A	31	G 3/4	12	11	0,010
28030-139100	A	39	G 1	12	12	0,020
28030-149114	A	49	G 1 1/4	13	13,5	0,028
28030-155112	A	55	G 1 1/2	14,7	14,5	0,038
28030-168200	A	68,5	G 2	15	16	0,058
28030-1201415	A	20	M14x1,5	9	9	0,004
28030-1201615	A	20	M16x1,5	9	10	0,004
28030-1281815	A	28	M18x1,5	10,5	10	0,006
28030-1282015	A	28	M20x1,5	10,5	10	0,008
28030-1282215	A	28	M22x1,5	10,5	10	0,008
28030-220014	B	20	G 1/4	9	9	0,004
28030-220038	B	20,5	G 3/8	9	10	0,004
28030-228012	B	28	G 1/2	10,5	10,5	0,008
28030-231034	B	31	G 3/4	12	11	0,010
28030-239100	B	39	G 1	12	12	0,020
28030-249114	B	49	G 1 1/4	13	13,5	0,028
28030-255112	B	55	G 1 1/2	14,7	14,5	0,038
28030-268200	B	68,5	G 2	15	16	0,058
28030-2201415	B	20	M14x1,5	9	9	0,004
28030-2201615	B	20	M16x1,5	9	10	0,004
28030-2281815	B	28	M18x1,5	10,5	10	0,006
28030-2282015	B	28	M20x1,5	10,5	10	0,008
28030-2282215	B	28	M22x1,5	10,5	10	0,008

Caps for Filler Necks



Material, surface finish:
Housing in black thermoplastic polyamide 66;
cap in red thermoplastic polyamide 66;
air filter in polyurethane (PU foam), filter fineness 50 µm;
flat packing in rubber (NBR)

Sample order:
nlm 28032-67200

Note:
Temperature resistant with oil up to 100 °C, with water up to 70 °C.

On request:
Cap in yellow for diesel oil.

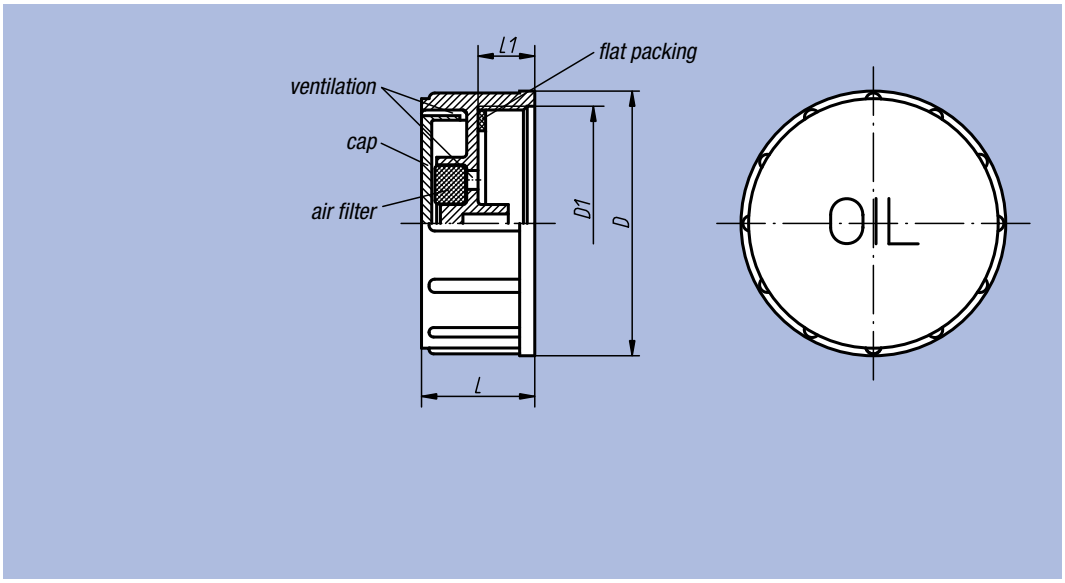

Order No.	D	D1	L	L1	kg
28032-67200	67,5	G 2	30	15	0,048
28032-676020	67,5	M60x2	30	15	0,048

Vent Screws



Material, surface finish:
Housing in black thermoplastic polyamide 66;
cap in red thermoplastic polyamide 66;
air filter (only Form B) in polyurethane (PU foam), filter fineness 60 µm;
O-ring in rubber (NBR)

Sample order:
nlm 28034-147034

Note:
Temperature resistant with oil up to 100 °C, with water up to 70 °C.
The removeable cap allows easy cleaning of the air filter.

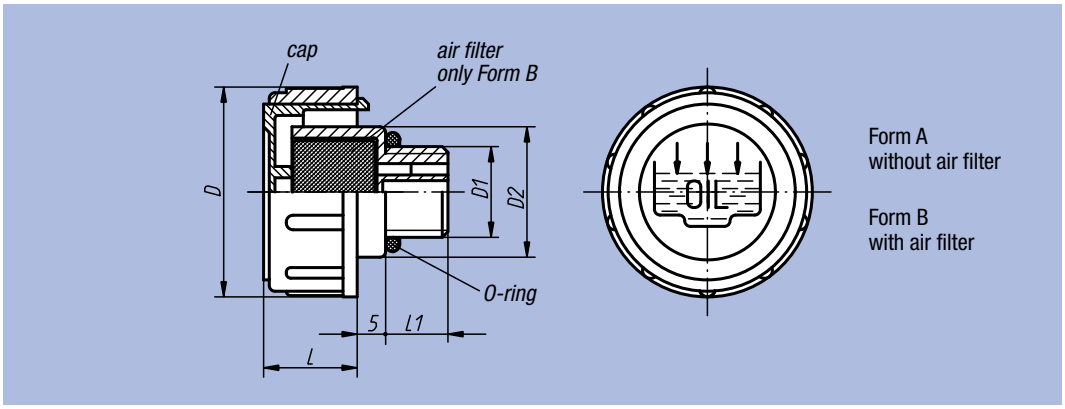

Order No. Form A	Order No. Form B	D	D1	D2	L	L1	kg
28034-136038	28034-236038	36	G 3/8	23	17	11	0,012
28034-141012	28034-241012	41	G 1/2	28	18	12	0,018
28034-147034	28034-247034	47	G 3/4	33	17	12	0,024
28034-152100	28034-252100	52	G 1	38	20	12	0,036
28034-163114	28034-263114	63	G 1 1/4	49	23	13	0,056
28034-163112	28034-263112	63	G 1 1/2	55	23	13,5	0,060
28034-1361615	28034-2361615	36	M16x1,5	23	17	11	0,014
28034-1411815	28034-2411815	41	M18x1,5	28	17,5	12	0,016
28034-1412015	28034-2412015	41	M20x1,5	28	17,5	12	0,018
28034-1412215	28034-2412215	41	M22x1,5	28	17,5	12	0,018

Vent Screws

with splash guard



Material, surface finish:
Housing in black thermoplastic polyamide 66;
cap in red thermoplastic polyamide 66;
air filter in polyurethane (PU foam), filter fineness 50 µm;
flat packing in rubber (NBR)

Sample order:
nlm 28036-30038

Note:
Temperature resistant with oil up to 100 °C, with water up to 70 °C.

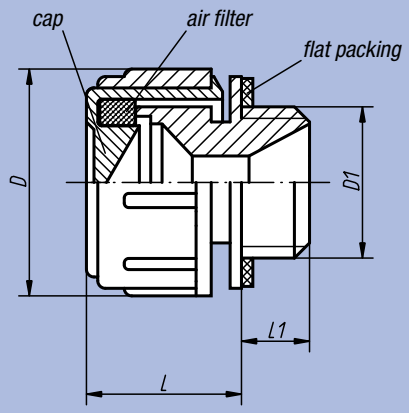

splash guard

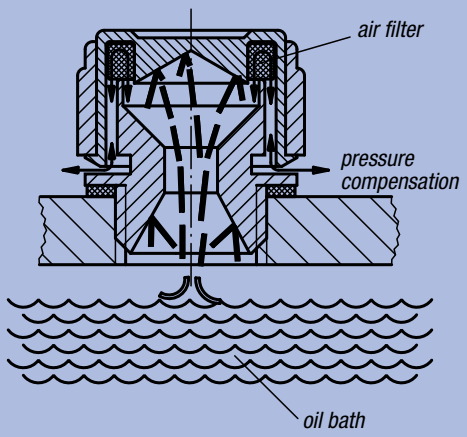

A gearbox running in an oil bath may cause oil to escape through the ventilation screw. To avoid this, the screw has been fitted with a splash guard. Only a part of the splashing oil passes through the taper bore. The remaining oil is deviated in such a way at the cap bottom that it returns without notably hindering the ventilation process.

Order No.	D	D1	L	L1	□ kg
28036-30014	30	G 1/4	21	10	0,010
28036-30038	30	G 3/8	21	10	0,010
28036-30012	30	G 1/2	21	10	0,012

Vent Screws

with nonreturn valve



Material, surface finish:
Housing in black thermoplastic polyamide 66;
cap in red thermoplastic polyamide 66;
compression spring in stainless steel;
stop and flat packing in rubber (NBR)

Sample order:
nlm 28038-30014

Note:
Temperature resistant with oil up to 100 °C, with water up to 70 °C.
Opening pressure 0.20 – 0.25 bar.

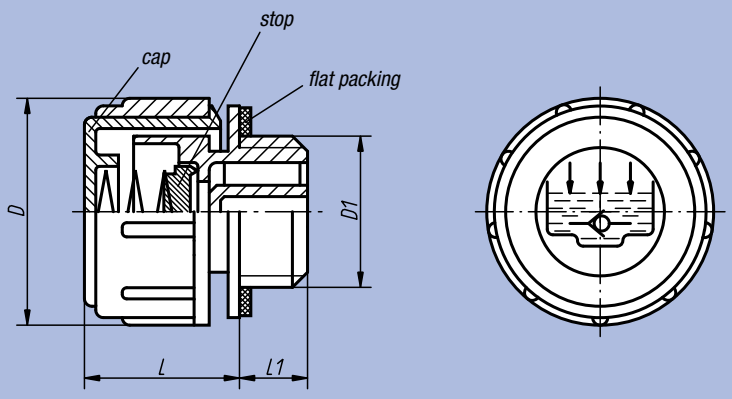

function principle

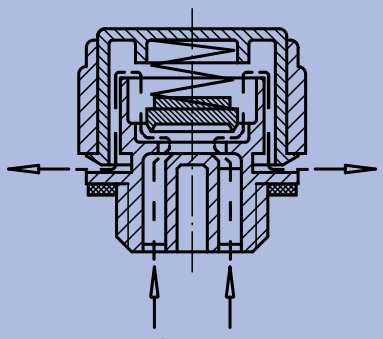

opening pressure
0,20 - 0,25 bar

Order No.	D	D1	L	L1	kg
28038-30014	30	G 1/4	21	10	0,010
28038-30038	30	G 3/8	21	10	0,012
28038-30012	30	G 1/2	21	10	0,012

Brass Vent Screws



Material, surface finish:
Housing and cap in brass;
air filter in galvanized steel wire fabric, filter fineness 50 - 60 µm;
flat packing asbestos-free

Sample order:
nlm 28040-20014

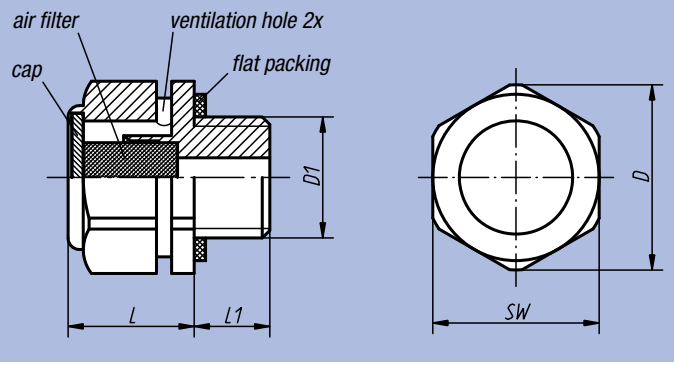

Order No.	D	D1	L	L1	SW	kg
28040-20014	20	G 1/4	13	9	18	0,022
28040-24038	24,5	G 3/8	14	10	22	0,046
28040-30012	30	G 1/2	14	10	27	0,072

Brass Vent Screws

with nonreturn valve



Material, surface finish:
Housing and cap in brass;
compression spring in stainless steel;
stop in aluminium;
O-ring in rubber (NBR);
flat packing asbestos-free.

Sample order:
nlm 28042-20014

Note:
Opening pressure 0.3 bar (±0.1).

Function principle:
See 28038 Vent Screws with nonreturn valve.

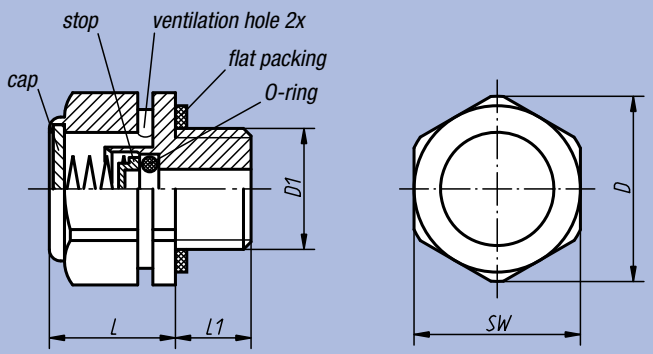

Order No.	D	D1	L	L1	SW	kg
28042-20014	20	G 1/4	13	9	18	0,022
28042-24038	24,5	G 3/8	14	10	22	0,044
28042-30012	30	G 1/2	14	10	27	0,070

Press-In Plugs

with dipstick



Material, surface finish:
Housing in black thermoplastic polyamide 66;
cap in red thermoplastic polyamide 66;
air filter in polyurethane (PU foam), filter fineness 50 µm;
dipstick in phosphated zinc;
O-ring in rubber (NBR)

Sample order:
nlm 28048-13018

Note:
Temperature resistant with oil up to 100 °C, with water up to 70 °C.

On request:
Min-Max mark notches and other dipstick lengths.

Form A
without ventilation

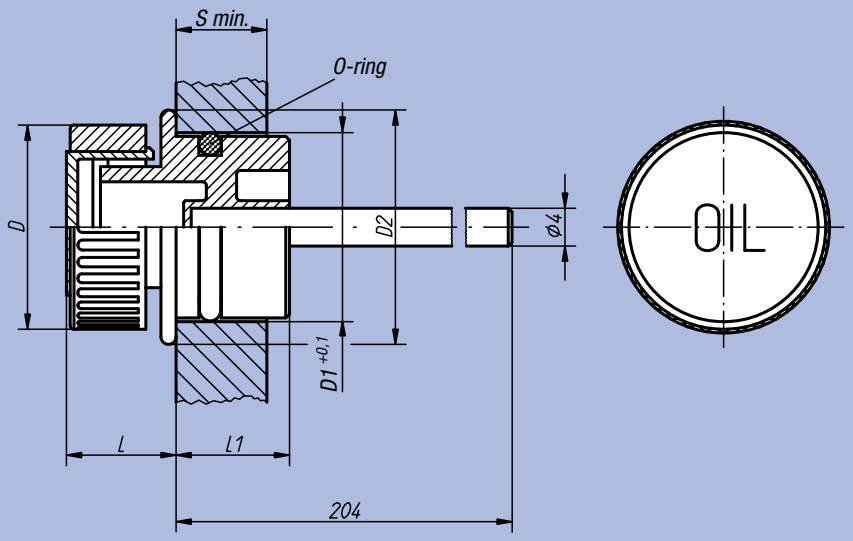

Form B
with ventilation

Form C
with ventilation
and air filter

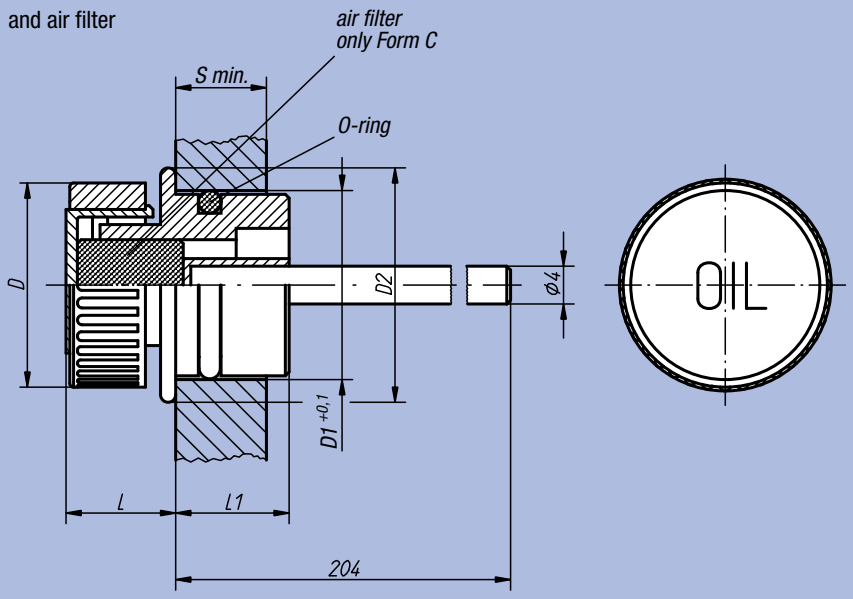

Order No. Form A	Order No. Form B	Order No. Form C	D	drill-Ø D1	D2	L	L1	S min.	kg
28048-13018	28048-23018	28048-33018	30	18	23	14	14	8	0,028

Vent Screws

with dipstick

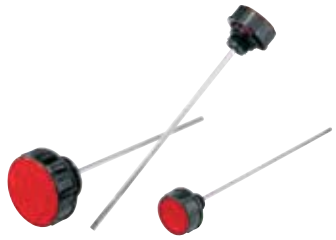

Material, surface finish:
Housing in black thermoplastic polyamide 66;
cap in red thermoplastic polyamide 66;
air filter (only Form B) in polyurethane (PU foam), filter fineness 50 µm;
dipstick in phosphated zinc;
O-ring in rubber (NBR)

Sample order:
nlm 28054-141012

Note:
Temperature resistant with oil up to 100 °C, with water up to 70 °C.
The removable cap allows easy cleaning of the air filter.

On request:
Min-Max mark notches and other dipstick lengths.

Form A
without air filter

Form B
with air filter

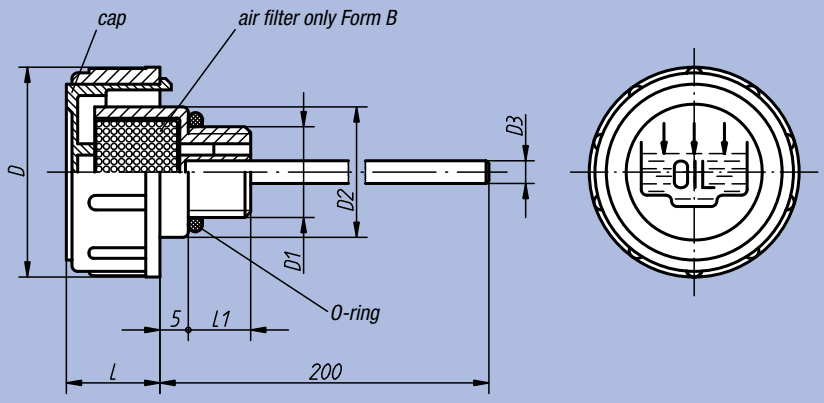

Order No.	Form	D	D1	D2	D3	L	L1	kg
28054-136038	A	36	G 3/8	23	4	17	11	0,032
28054-141012	A	41	G 1/2	28	4	18	12	0,048
28054-147034	A	47	G 3/4	33	5	17	12	0,054
28054-152100	A	52	G 1	38	5	20	12	0,060
28054-163114	A	63	G 1 1/4	49	5	23	13	0,086
28054-163112	A	63	G 1 1/2	55	5	23	13,5	0,090
28054-1361615	A	36	M16x1,5	23	4	17	11	0,032
28054-1411815	A	41	M18x1,5	28	4	17,5	12	0,046
28054-1412015	A	41	M20x1,5	28	4	17,5	12	0,048
28054-1412215	A	41	M22x1,5	28	4	17,5	12	0,048
28054-236038	B	36	G 3/8	23	4	17	11	0,032
28054-241012	B	41	G 1/2	28	4	18	12	0,048
28054-247034	B	47	G 3/4	33	5	17	12	0,054
28054-252100	B	52	G 1	38	5	20	12	0,060
28054-263114	B	63	G 1 1/4	49	5	23	13	0,086
28054-263112	B	63	G 1 1/2	55	5	23	13,5	0,090
28054-2361615	B	36	M16x1,5	23	4	17	11	0,032
28054-2411815	B	41	M18x1,5	28	4	17,5	12	0,046
28054-2412015	B	41	M20x1,5	28	4	17,5	12	0,048
28054-2412215	B	41	M22x1,5	28	4	17,5	12	0,048

Vent Screws

with nonreturn valve and dipstick



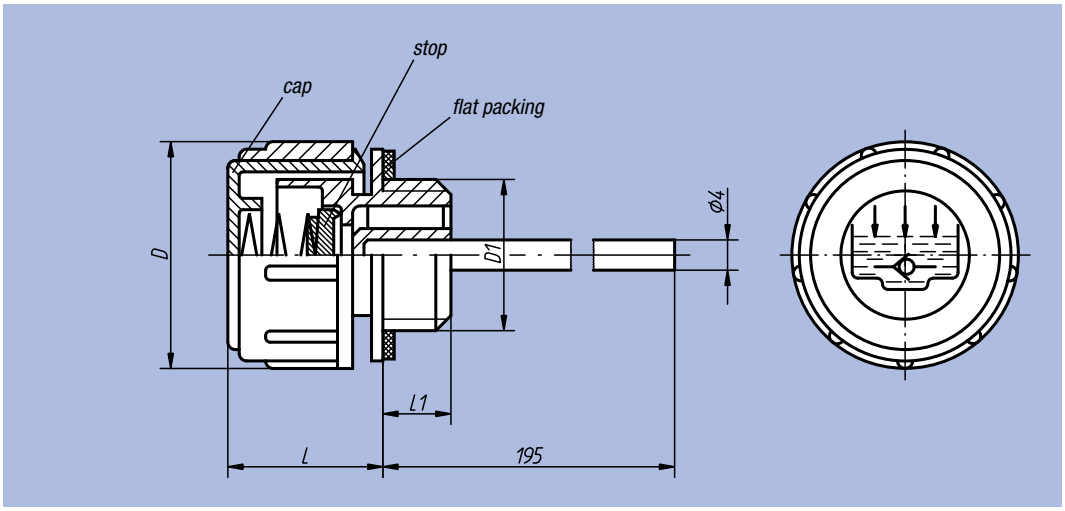

Material, surface finish:
Housing in black thermoplastic polyamide 66;
cap in red thermoplastic polyamide 66;
compression spring in stainless steel;
dipstick in phosphated zinc;
stop and flat packing in rubber (NBR)

Sample order:
nlm 28058-30038

Note:
Temperature resistant with oil up to 100 °C, with water up to 70 °C.
Opening pressure 0.20 – 0.25 bar.
For the function principle see Vent Screws with nonreturn valve 28038.

On request:
Min-Max mark notches and other dipstick lengths.

Order No.	D	D1	L	L1	kg
28058-30038	30	G 3/8	21	10	0,030
28058-30012	30	G 1/2	21	10	0,030

Notes:

Dipsticks



Material, surface finish:
Grip in black thermoplastic polyamide 66;
dipstick in phosphated zinc;
O-ring in rubber (NBR)

Sample order:
nlm 28060-23218

Form B
with ventilation hole

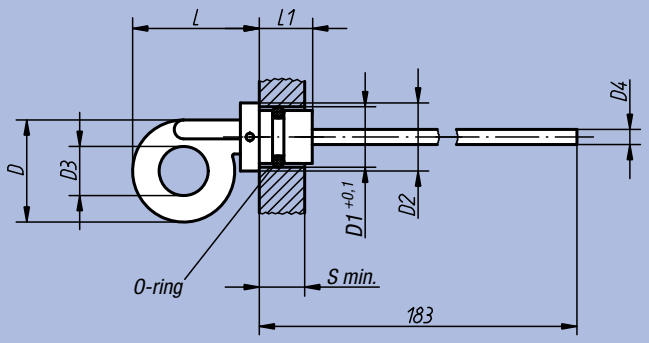

Form C
without ventilation hole

Form D
with ventilation hole

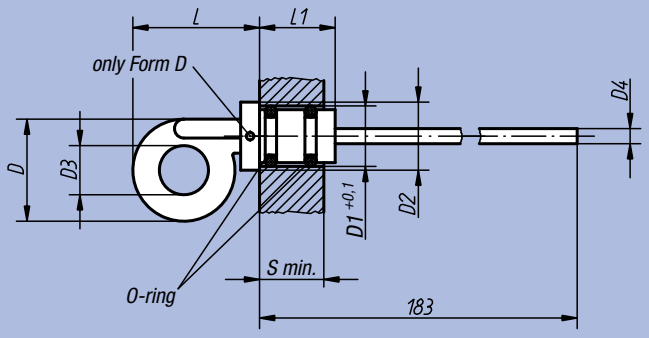

Order No.	Form	D	drill-Ø D1	D2	D3	D4 Ø	L	L1	S min.	kg
28060-22714	B	27	14	18	13	4	34	13	10	0,028
28060-23218	B	32	18	24	14	5	45	17	9	0,040
28060-23220	B	32	20	24	14	5	44,5	18	10	0,040
28060-32714	C	27	14	18	13	4	34	20	17	0,028
28060-33012	C	30	12	18	14	4	36	20	16	0,028
28060-33318	C	33	18	24	14	5	44	21	17,5	0,042
28060-33520	C	35	20	24	16	5	46	21	17,5	0,048
28060-42714	D	27	14	18	13	4	34	20	17	0,028
28060-43318	D	33	18	24	14	5	44	21	17,5	0,042

Filler Neck



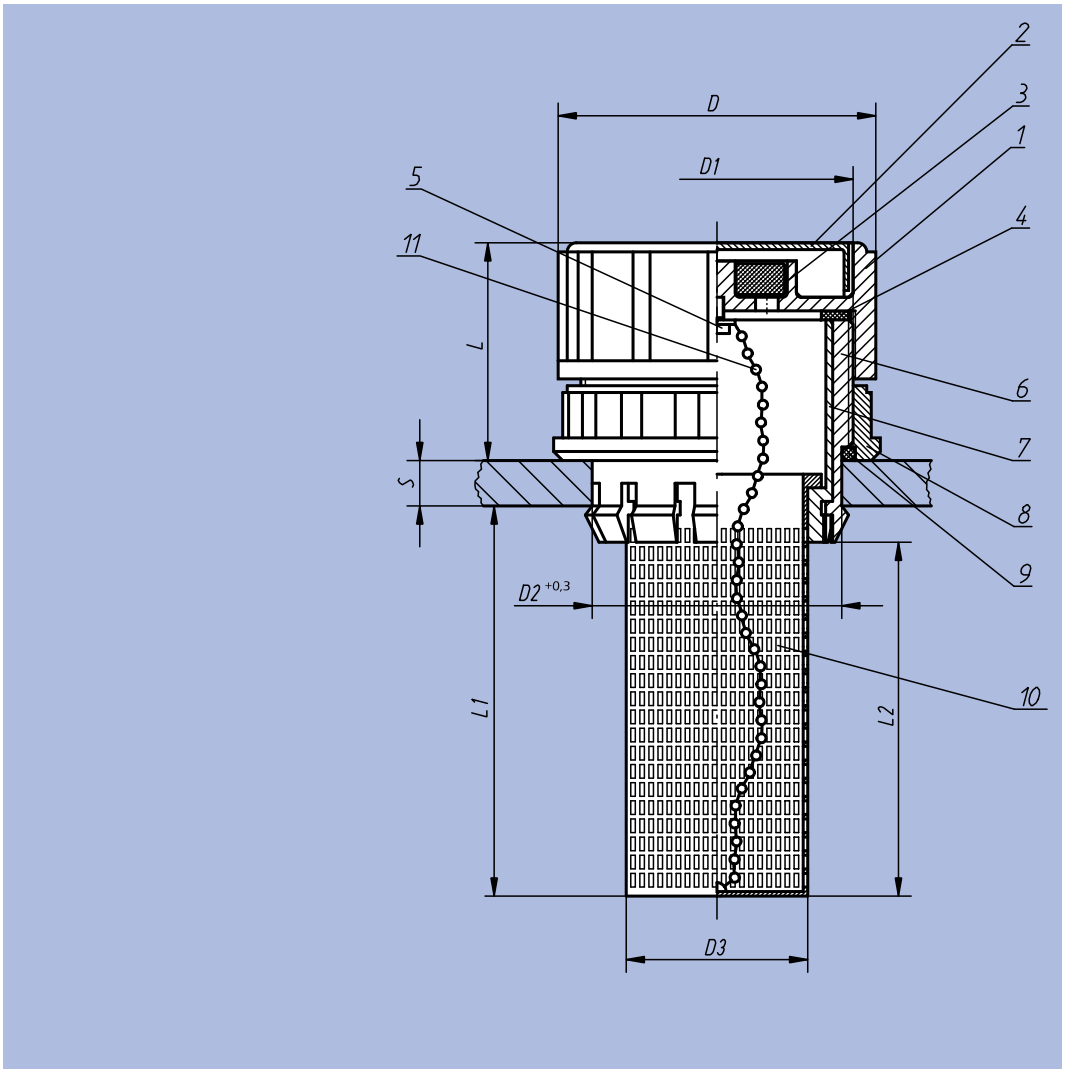

Material, surface finish:

1. Closing housing in black thermoplastic polyamide 66
2. Closing lid in red thermoplastic polyamide 66
3. Air filter in polyurethane (PU foam), filter fineness 50 µm
4. Flat packing in rubber (NBR)
5. Fastening screw in nickel-plated steel
6. Press-in part in black thermoplastic polyamide 66
7. Stop sleeve in black thermoplastic polyamide 66
8. Fastening nut in black thermoplastic polyamide 66
9. O-ring in rubber (NBR)
10. Filler strainer in black thermoplastic polypropylene
11. Chain in nickel-plated brass

Sample order:
nlm 28070-706020

Note:
Temperature resistant up to 90 °C.

Order No.	D	D1	D2	D3	L	L1	L2	S	kg
28070-706020	70	M60x2	55	38	46,5	88	80	2 - 8	0,120

Filler Neck



Material, surface finish:
1. Closing housing in chrome steel

2. Air filter in polyurethane (PU foam), filter fineness 40 µm. Air flow rate up to 720 l/min

3. Flat packing in cork

4. Mounting flange with fixing screws, bayonet fitting

5. Flat packing in cork

6. Chain in nickel-plated brass (only with Order No. 28071-77)

7. Filler strainer in galvanized steel

Sample order:
nlm 28071-45

Note:
The filler necks are supplied with packings and fixing screws (M5).

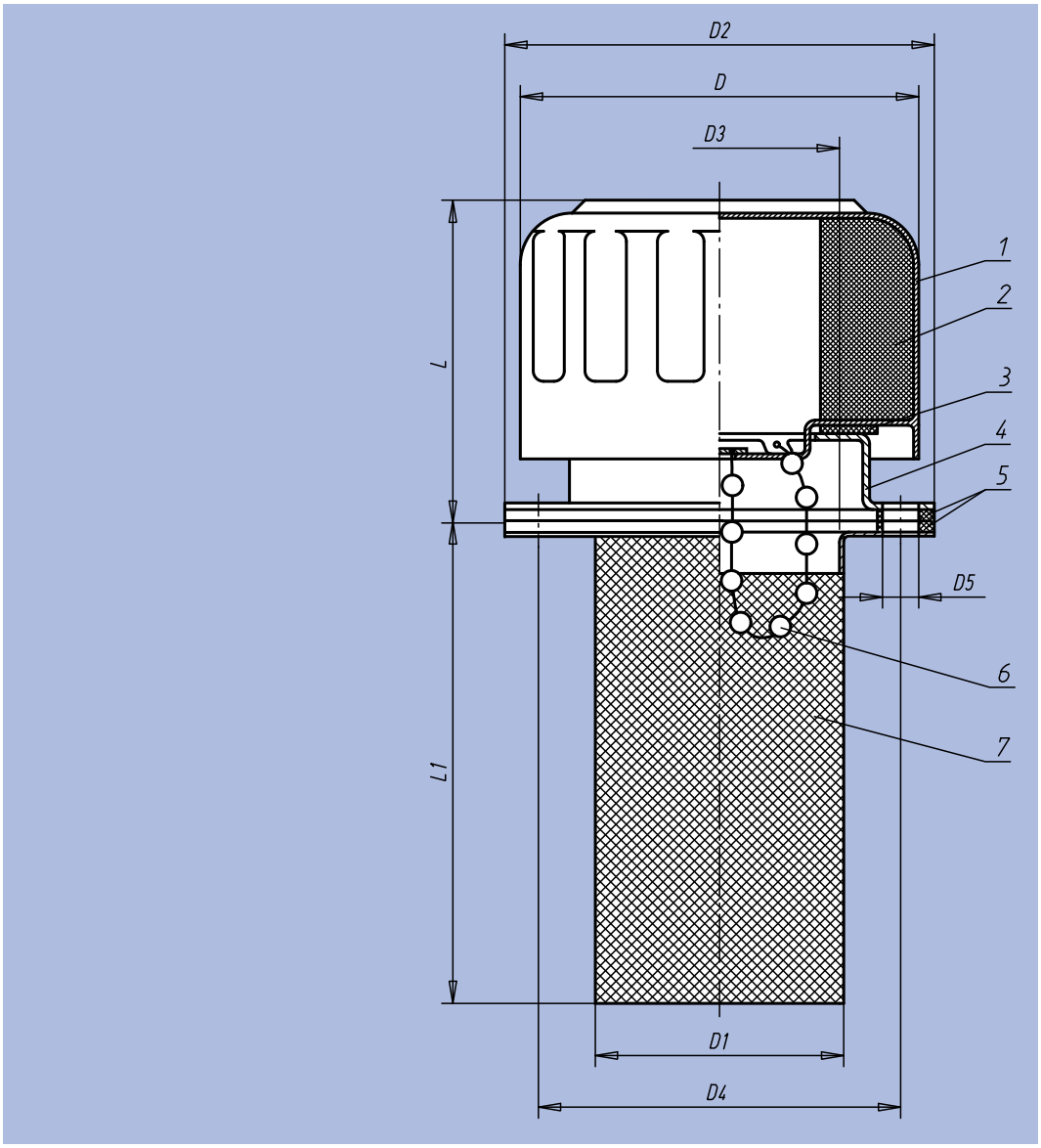

Order No.	D	D1	D2	D3	D4	D5	L	L1	kg
28071-45	45	28	50,8	25	41,3	6 (3x)	49	65	0,110
28071-77	77	48	83,4	44	71,5	6 (6x)	62	91	0,280

29000

Tubular Connections
Clamps
Clamping Elements
Tubes
Construction of Columns



Technical Information on the Tubular Connection System in thermoplastic

The Tubular Connection System stands out particularly thanks to its attractive design and a special reducing bush concept.
This unique concept and the associated clamping of the most varied diameters and tube cross-sections permit a flexibility never before achieved.

Just by replacing the bush, an existing tubular construction can be transformed into one with a different diameter or cross-section.

Benefits:

- Only one clamping element per construction type
- Tube reduction (from Ø12–30 or □10–25) by means of different reducing bushes for round tubes or square tubes
- Tube diameter indication on each reducing bush
- Bushes torsion prevention inside the clamping element

Note:
The clamping elements are supplied as standard with a DIN 7984 screw and a DIN 985 self-locking nut.
Clamp levers in plastic for fixing available on request.

"Closed" system (one-piece basic form)

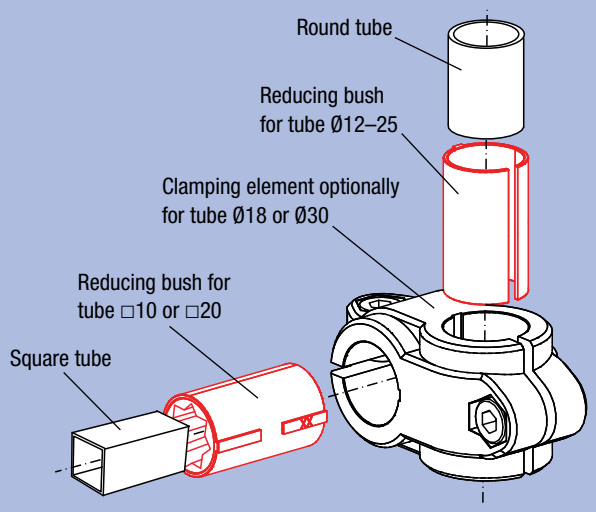

"Half-cup" elements (two-pieces basic form)

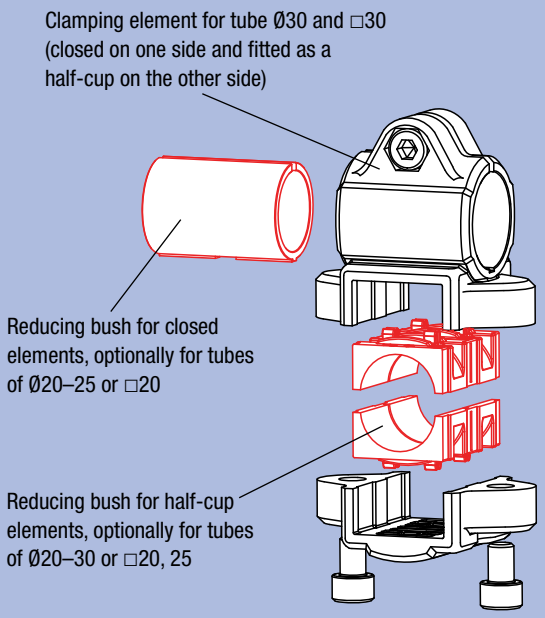

Cross Clamps



Material, surface finish:
Black thermoplastic; socket head screw to DIN 7984 and hexagon nut to DIN 985 in galvanized steel

Sample order:
nlm 29000-1818

Note:
The basic size for round tubes is Ø18 mm or Ø30 mm. If smaller tubes are to be clamped or converted from round to square tubes, these can be adjusted to the required fitting by means of Reducing Bushes 29042.

On request:
Clamp levers in plastic for fixing.

Accessory:
- Reducing Bushes 29042
- Round and Square Tubes 29050

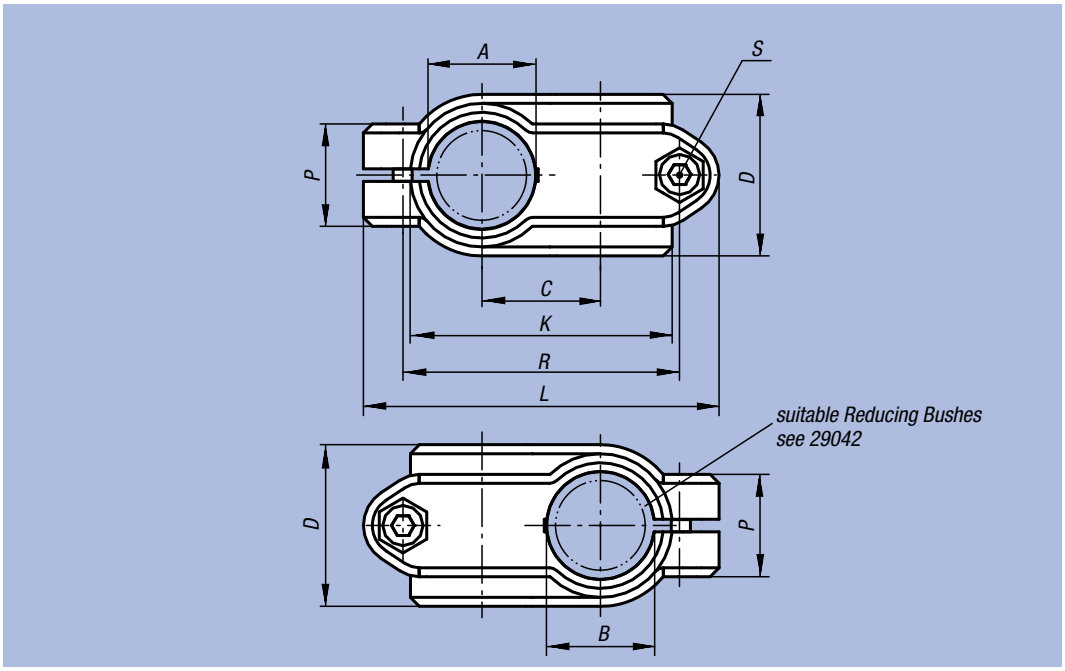

Order No.	A	B	C	D	K	L	P	R	S	kg
29000-1818	18	18	20	30	48	63	21	48	M6x18	0,050
29000-3030	30	30	33	45	72	99	28,5	77	M8x25	0,132

Application using tube connection



Cross Clamps



Material, surface finish:
Cast aluminium, vibration ground; socket head screw to DIN 7984 and hexagon nut to DIN 985 in galvanized steel

Sample order:
nlm 29000-51818

On request:
Clamp levers for fixing.

Accessory:
- Round and Square Tubes 29050

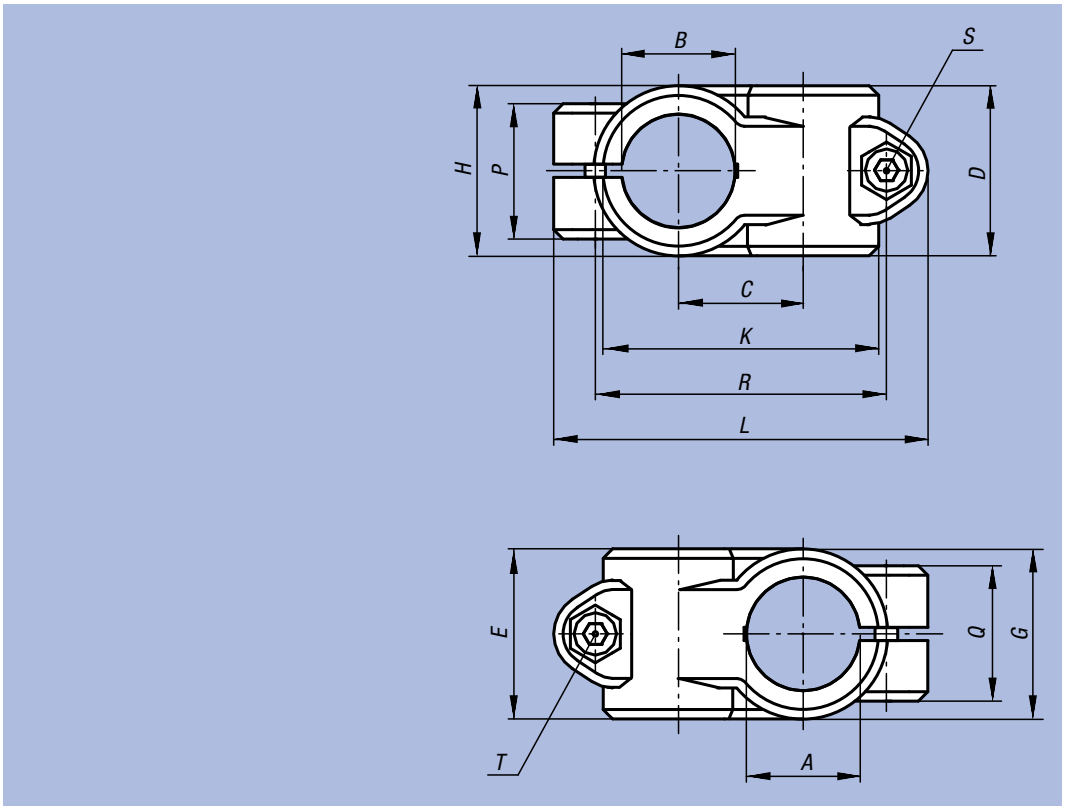

Order No.	A	B	C	D	E	G	H	K	L	P	Q	R	S	T	kg
29000-51212	12,1	12,1	20	25,5	25,5	-	-	43,5	66	23	23	51	M6x20	M6x20	0,080
29000-51414	14,1	14,1	20	25,5	25,5	-	-	43,5	66	22	22	51	M6x20	M6x18	0,070
29000-51515	15,1	15,1	20	25,5	25,5	-	-	43,5	66	22	22	51	M6x20	M6x18	0,069
29000-51616	16,1	16,1	20	25,5	25,5	-	-	43,5	66	22	22	51	M6x20	M6x18	0,066
29000-51818	18,1	18,1	20	25,5	25,5	-	-	43,5	66	23	23	51	M6x20	M6x18	0,061
29000-52014	20,1	14,1	27	40	33	40	26	60	84	21	33	65	M8x25	M6x18	0,172
29000-52020	20,1	20,1	33	40	40	-	-	73	99	33	33	78	M8x25	M8x25	0,252
29000-52514	25,1	14,1	27	40	33	40	26	60	84	21	33	65	M8x25	M6x18	0,154
29000-52525	25,1	25,1	33	40	40	-	-	73	99	33	33	78	M8x25	M8x25	0,217
29000-53014	30,1	14,1	27	40	33	40	26	60	84	21	33	65	M8x25	M6x18	0,132
29000-53030	30,1	30,1	33	40	40	-	-	73	99	33	33	78	M8x25	M8x25	0,173
29000-54020	40,2	20,2	36	50	40	55	34,5	87	109	33	40	87	M10x30	M8x25	0,265
29000-54030	40,2	30,1	45	65	65	65	49	98	137	44	44	109	M10x30	M10x30	0,660
29000-54040	40,17	40,17	45	60	60	-	-	100	137	40	40	110	M10x30	M10x30	0,519
29000-55030	50,2	30,1	45	65	65	65	49	98	137	44	44	109	M10x35	M10x35	0,538
29000-55050	50,2	50,2	54	70	70	-	-	118	154	45	45	128	M10x35	M10x35	0,067

Cross Clamps



Material, surface finish:
Cast aluminium, vibration ground, clamping screw with nut in galvanized steel

Sample order:
nlm 29000-523030

On request:
Clamp levers for fixing and further diameters.

Accessory:
- Round and Square Tubes 29050

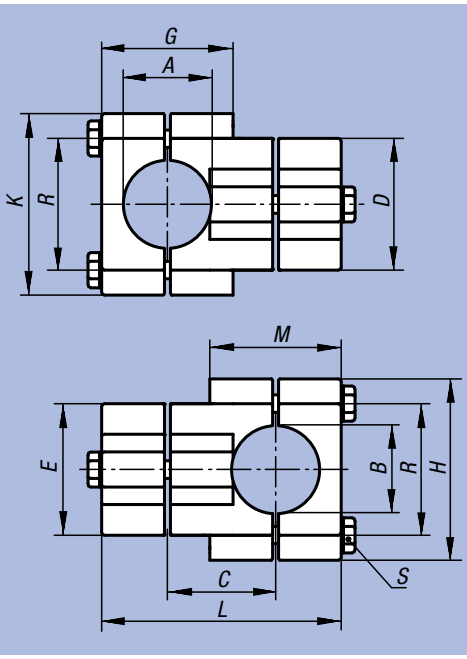

Order No.	A	B	C	D	E	G	H	K	L	M	R	S	kg
29000-523030	30,2	30,2	38	45	45	44	62	62	83	44	46	M8x45	0,352
29000-524040	40,2	40,2	50	60	60	60	75	75	110	60	57	M8x60	0,645

Notes:

Cross Clamp



Material, surface finish:
Black thermoplastic; socket head screw to DIN 7984 and hexagon nut to DIN 985 in galvanized steel

Sample order:
nlm 29002-3030

Note:
With the Cross Clamp square tubes 30 mm can be clamped. If smaller tubes are to be clamped or converted from square to round tubes, these can be adjusted to the required fitting by means of Reducing Bushes 29040.

On request:
Clamp levers in plastic for fixing.

Accessory:
- Reducing Bushes 29040
- Round and Square Tubes 29050

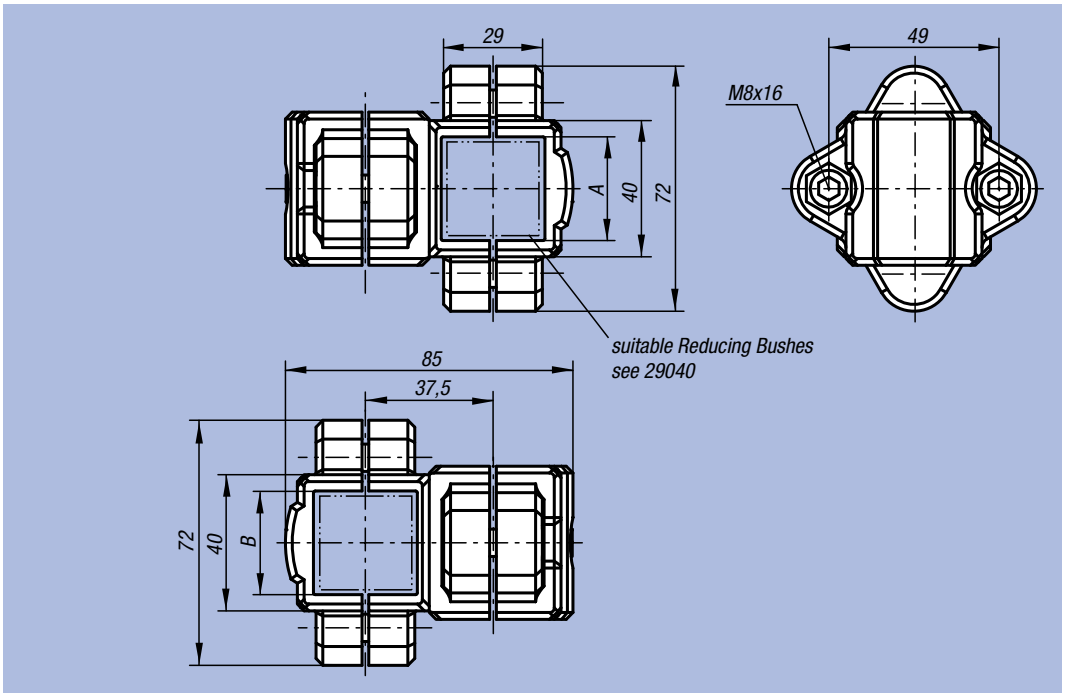

Order No.	A	B	kg
29002-3030	30	30	0,171

nlm 29002

Cross Clamps



Material, surface finish:
Cast aluminium, vibration ground; clamping screw with nut in galvanized steel

Sample order:
nlm 29002-523030

On request:
Clamp levers for fixing and further diameters.

Accessory:
- Round and Square Tubes 29050

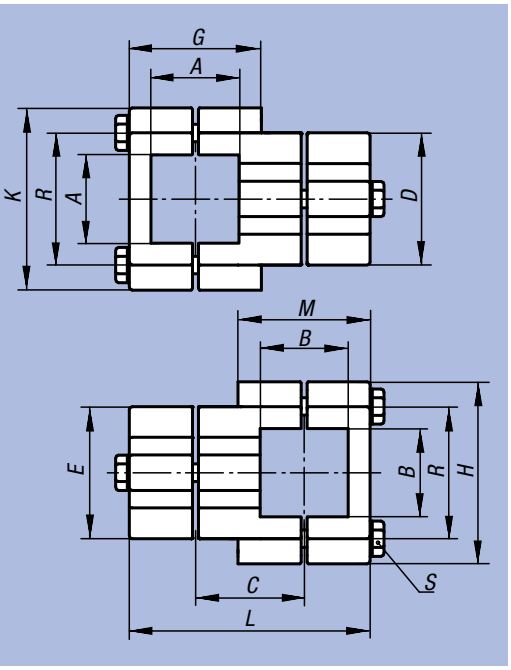

Order No.	A	B	C	D	E	G	H	K	L	M	R	S	kg
29002-523030	30,2	30,2	38	45	45	44	62	62	83	44	46	M8x45	0,321
29002-524040	40,3	40,3	50	60	60	60	75	75	110	60	57	M8x60	0,584

Cross Clamp



Material, surface finish:
Black thermoplastic; socket head screw to DIN 7984 and hexagon nut to DIN 985 in galvanized steel

Sample order:
nlm 29004-3030

Note:
With the Cross Clamp square and round tubes 30 mm can be clamped. If smaller tubes are to be clamped or optionally converted from round to square tubes, these can be adjusted to the required fitting by means of Reducing Bushes 29040 or 29042.

On request:
Clamp levers in plastic for fixing.

Accessory:
- Reducing Bushes 29040 and 29042
- Round and Square Tubes 29050

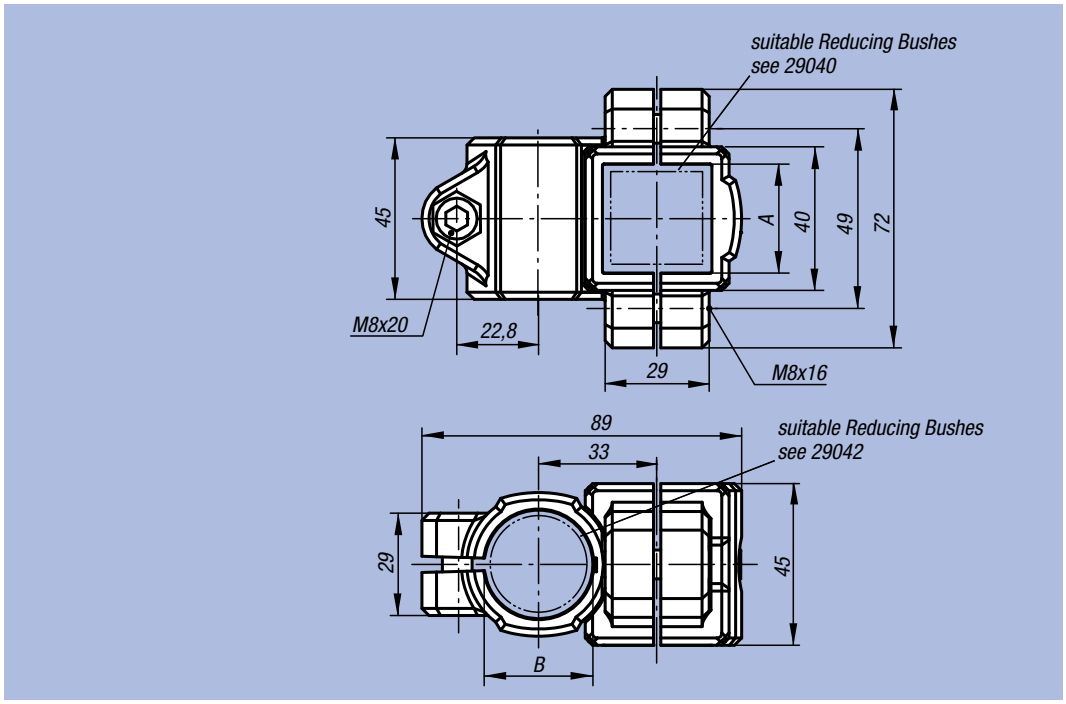

Order No.	A	B	kg
29004-3030	30	30	0,117

nlm 29004

Cross Clamps



Material, surface finish:
Cast aluminium, vibration ground; clamping screw with nut in galvanized steel

Sample order:
nlm 29004-53030

On request:
Clamp levers for fixing and further diameters.

Accessory:
- Round and Square Tubes 29050

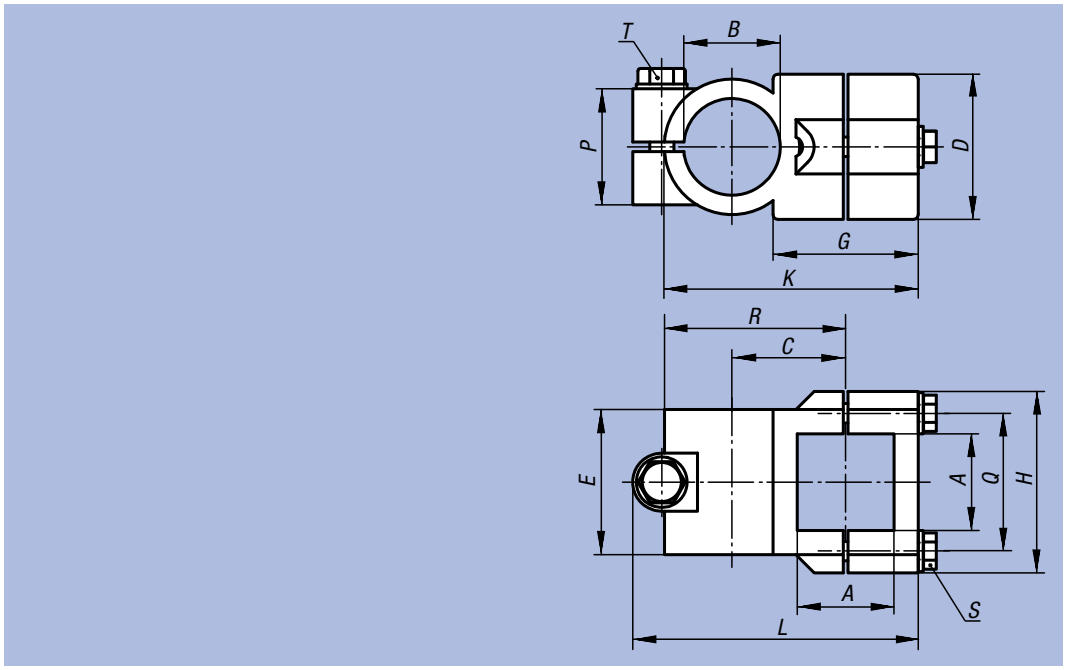

Order No.	A	B	C	D	E	G	H	K	L	P	Q	R	S	T	kg
29004-53030	30,2	30,1	33	45	45	40	62	74,5	85	33	46	55	M8x35	M8x35	0,245
29004-54040	40,3	40,2	47	60	60	60	75	105	117	48	57	75	M8x45	M10x50	0,525

Angle Clamps



Material, surface finish:
Black thermoplastic; socket head screw to DIN 7984 and hexagon nut to DIN 985 in galvanized steel

Sample order:
nlm 29006-1818

Note:
The basic size for round tubes is Ø18 mm or Ø30 mm. If smaller tubes are to be clamped or converted from round to square tubes, these can be adjusted to the required fitting by means of Reducing Bushes 29042.

On request:
Clamp levers in plastic for fixing.

Accessory:
- Reducing Bushes 29042
- Round and Square Tubes 29050

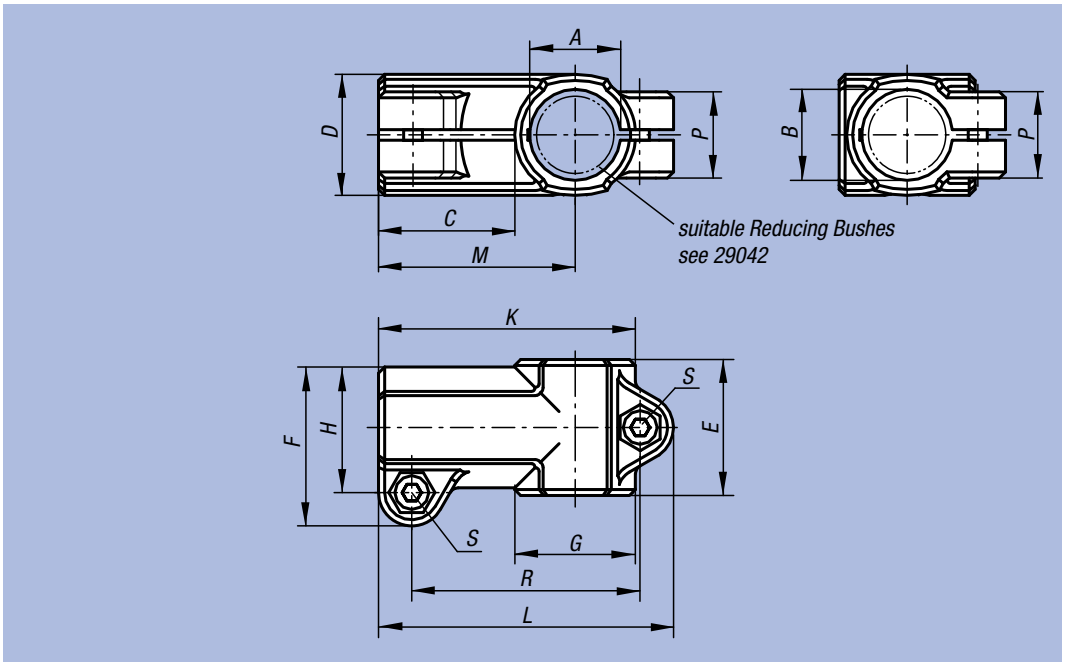

Order No.	A	B	C	D	E	F	G	H	K	L	M	P	R	S	kg
29006-1818	18	18	30,5	25	30	34	25	26,5	55,5	64,5	43	21	49,5	M6x18	0,044
29006-3030	30	30	45	40	45	52,5	40	41,5	85	97,5	65	28,5	75,5	M8x25	0,115

Notes:

Angle Clamps



Material, surface finish:
Cast aluminium, vibration ground; socket head screw to DIN 7984 and hexagon nut to DIN 985 in galvanized steel

Sample order:
nlm 29006-51818

On request:
Clamp levers for fixing and further diameters.

Accessory:
- Round and Square Tubes 29050

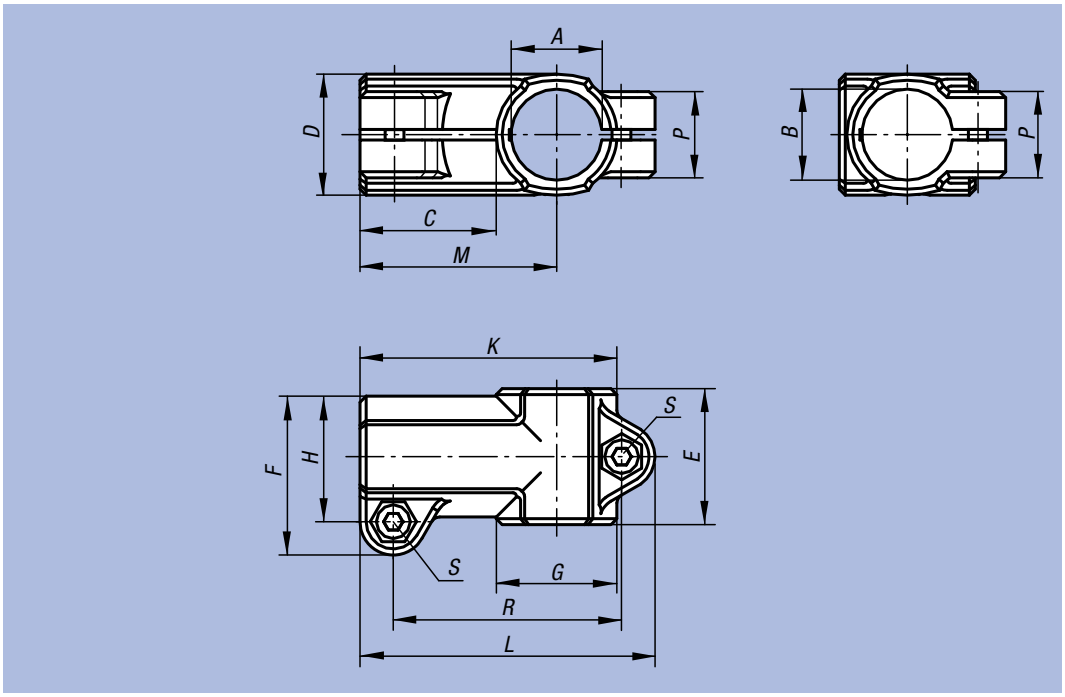

Order No.	A	B	C	D	E	F	G	H	K	L	M	P	R	S	kg
29006-51212	12,1	12,1	30	26	32	37,5	26	30	56	67,5	43	21	52	M6x20	0,097
29006-51414	14,1	14,1	30	26	32	37,5	26	30	56	67,5	43	21	52	M6x20	0,090
29006-51515	15,1	15,1	30	26	32	37,5	26	30	56	67,5	43	21	52	M6x20	0,087
29006-51616	16,1	16,1	30	26	32	37,5	26	30	56	67,5	43	21	52	M6x20	0,083
29006-51818	18,1	18,1	30	26	32	37,5	26	30	56	67,5	43	21	52	M6x20	0,075
29006-52020	20,1	20,1	40	40	45	53	40	42,5	80	93	60	33	72,5	M8x25	0,279
29006-52525	25,1	25,1	40	40	45	53	40	42,5	80	93	60	33	72,5	M8x25	0,240
29006-53030	30,1	30,1	40	40	45	53	40	42,5	80	93	60	33	72,5	M8x25	0,193
29006-54040	40,2	40,2	60	56	60	74	56	60	115	133	88	40	107	M10x30	0,526
29006-55050	50,22	50,22	63	66	70	85	66	71	131	150	99	45	122	M10x35	0,725

Angle Clamp



Material, surface finish:
Black thermoplastic; socket head screw to DIN 7984 and hexagon nut to DIN 985 in galvanized steel

Sample order:
nlm 29008-3030

Note:
With the Angle Clamp square tubes 30 mm can be clamped. If smaller tubes are to be clamped or converted from square to round tubes, these can be adjusted to the required fitting by means of Reducing Bushes 29040.

On request:
Clamp levers in plastic for fixing.

Accessory:
- Reducing Bushes 29040
- Round and Square Tubes 29050

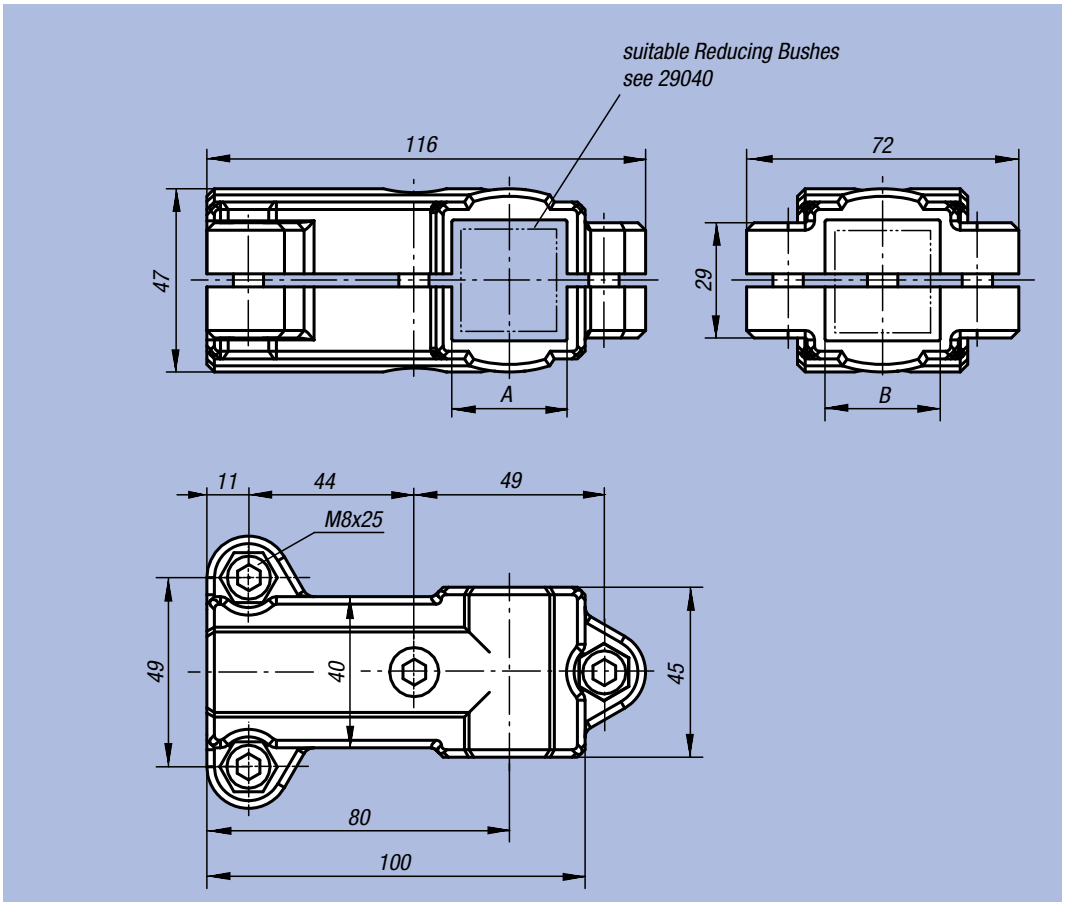

Order No.	A	B	kg
29008-3030	30	30	0,194

Angle Clamps



Material, surface finish:
Cast aluminium, vibration ground; clamping screw with nut in galvanized steel

Sample order:
nlm 29008-523030

On request:
Clamp levers for fixing and further dimensions for square tubes.

Accessory:
- Round and Square Tubes 29050

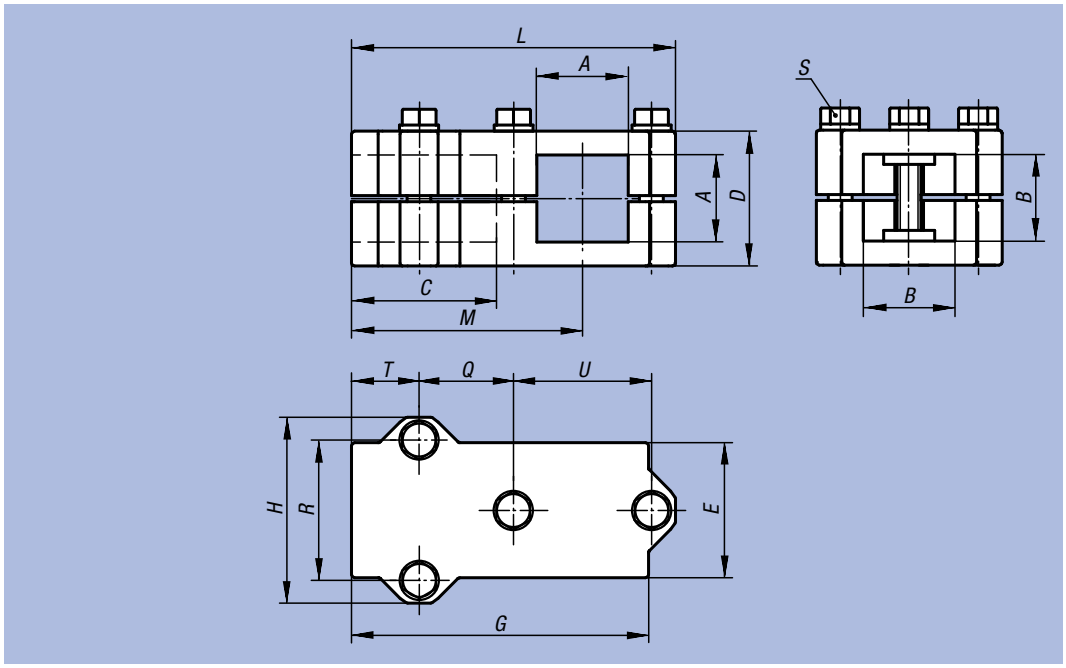

Order No.	A	B	C	D	E	G	H	L	M	Q	R	S	T	U	kg
29008-523030	30,3	30,3	46	45	45	100	62	108	77	31,5	46	M8x45	23	46	0,361
29008-524040	40,4	40,4	60	60	60	129	75	136	99	40	57	M8x60	30	57	0,722

nlm 29008

Angle Clamps



Material, surface finish:
Cast aluminium, vibration ground; clamping screw with nut in galvanized steel

Sample order:
nlm 29008-530

On request:
Clamp levers for fixing and further diameters.

Accessory:
- Round and Square Tubes 29050

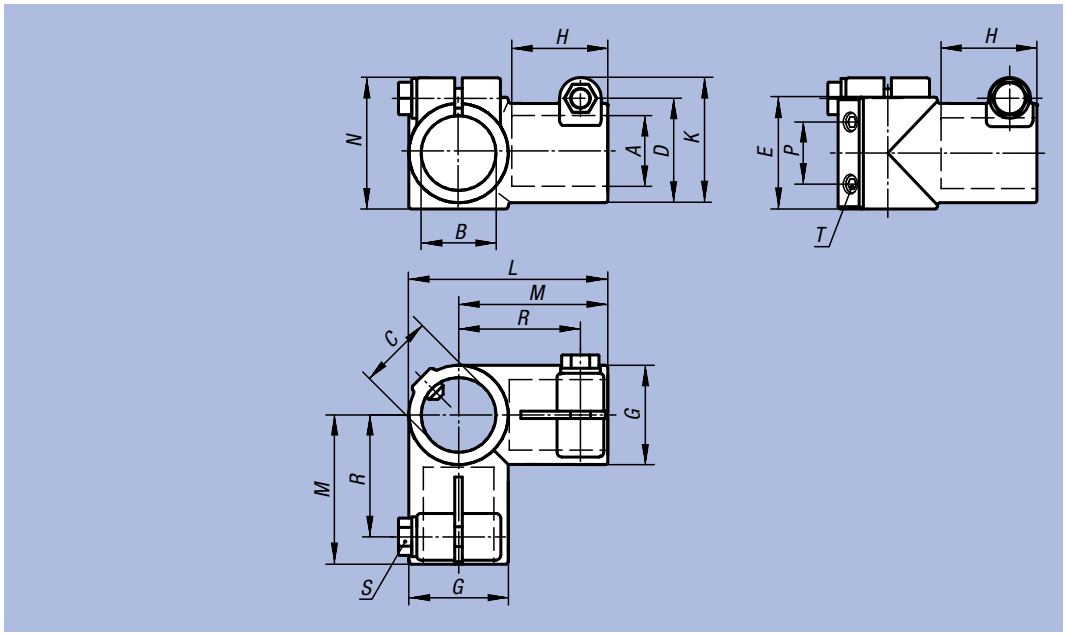

Order No.	A	B	C	D	E	G	H	K	L	M	N	P	R	S	T	kg
29008-530	30,1	30,1	30	40	45	40	35	51	80	60	53	25	49	M8x 35	M8x15	0,250
29008-540	40,2	40,2	40	56	60	56	58	71	116	88	73	35	75	M10x30	M8x10	0,769
29008-550	50,2	50,2	50,2	66	70	66	70	78	136	108	80	40	90	M10x35	M10x12	0,996

Base Clamps



Material, surface finish:
Black thermoplastic; socket head screw to DIN 7984 and hexagon nut to DIN 985 in galvanized steel

Sample order:
nlm 29010-18

Note:
The basic size for round tubes is Ø18 mm or Ø30 mm. If smaller tubes are to be clamped or converted from round to square tubes, these can be adjusted to the required fitting by means of Reducing Bushes 29042.

On request:
Clamp levers in plastic for fixing.

Accessory:
- Reducing Bushes 29042
- Round and Square Tubes 29050

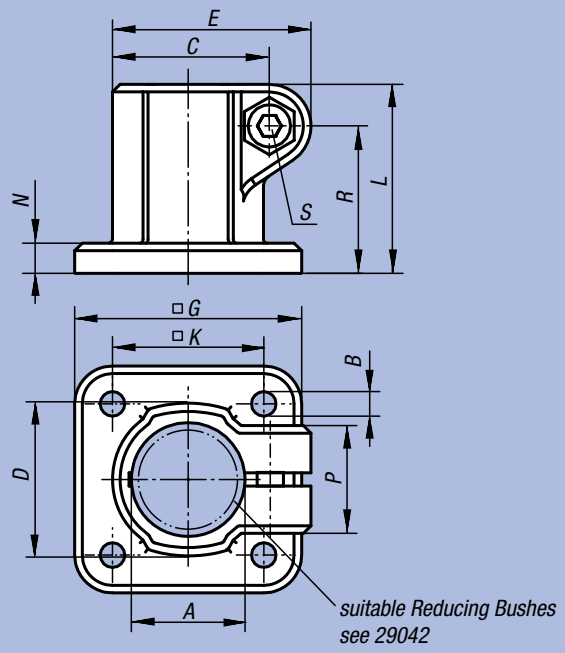

Order No.	A	B	C	D	E	G	K	L	N	P	R	S	kg
29010-18	18	5,3	26,5	26	34	45	30	32	5	21	24,5	M6x18	0,030
29010-30	30	6,5	41,5	42	52,5	60	40	50	8	28,5	39	M8x25	0,075

Base Clamps



Material, surface finish:
Cast aluminium, vibration ground; socket head screw to DIN 7984 and hexagon nut to DIN 985 in galvanized steel

Sample order:
nlm 29010-518

Note:
* Oblong hole

On request:
Clamp levers for fixing and further diameters.

Accessory:
- Round and Square Tubes 29050

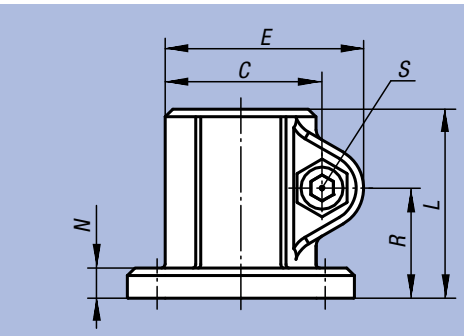

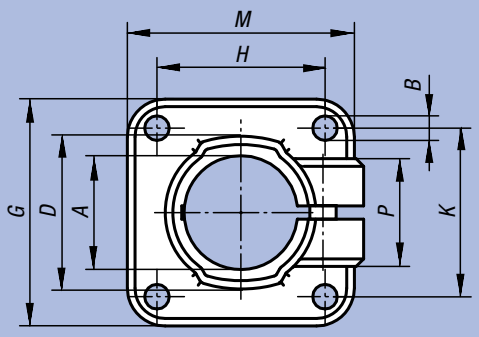

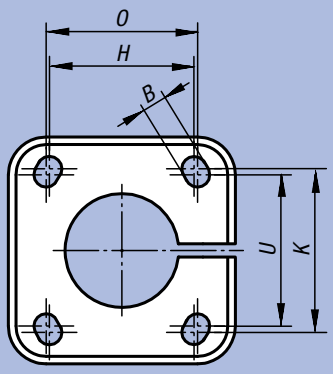

hole arrangement for Order No. 29010-520 to 29010-530

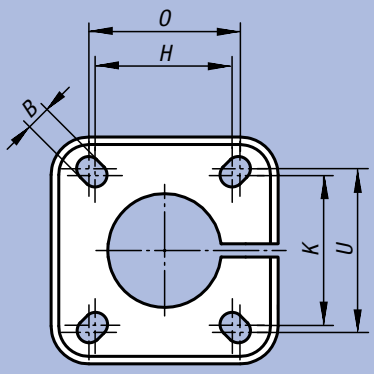

hole arrangement for Order No. 29010-540 and 29010-550

Order No.	A	B	C	D	E	G	H	K	L	M	N	O	P	R	S	U	□ kg
29010-512	12,1	5,5	29,5	26	37,5	42	30	30	37	42	5	-	23	21	M6x20	-	0,064
29010-514	14,1	5,5	29,5	26	37,5	42	30	30	37	42	5	-	22	21	M6x20	-	0,059
29010-515	15,1	5,5	29,5	26	37,5	42	30	30	37	42	5	-	22	21	M6x20	-	0,057
29010-516	16,1	5,5	29,5	26	37,5	42	30	30	37	42	5	-	22	21	M6x20	-	0,057
29010-518	18,1	5,5	29,5	26	37,5	42	30	30	37	42	5	-	22	21	M6x20	-	0,052
29010-520	20,1	6,5*	42,5	40	53	60	40	45	50	60	8	42	33	29	M8x25	42	0,193
29010-525	25,1	6,5*	42,5	40	53	60	40	45	50	60	8	42	33	29	M8x25	42	0,164
29010-530	30,1	6,5*	42,5	40	53	60	40	45	50	60	8	42	33	29	M8x25	42	0,137
29010-540	40,17	8,5*	60	56	74	90	60	60	70	90	10	64	40	40	M10x30	64	0,387
29010-550	50,2	10,5*	70	66	85	105	74	74	85	105	14	80	45	49,5	M10x35	80	0,600

Base Clamp



Material, surface finish:
Black thermoplastic; socket head screw to DIN 7984 and hexagon nut to DIN 985 in galvanized steel

Sample order:
nlm 29012-30

Note:
With the Base Clamp square tubes 30 mm can be clamped. If smaller tubes are to be clamped or converted from square to round tubes, these can be adjusted to the required fitting by means of Reducing Bushes 29040.

On request:
Clamp levers in plastic for fixing.

Accessory:
- Reducing Bushes 29040
- Round and Square Tubes 29050

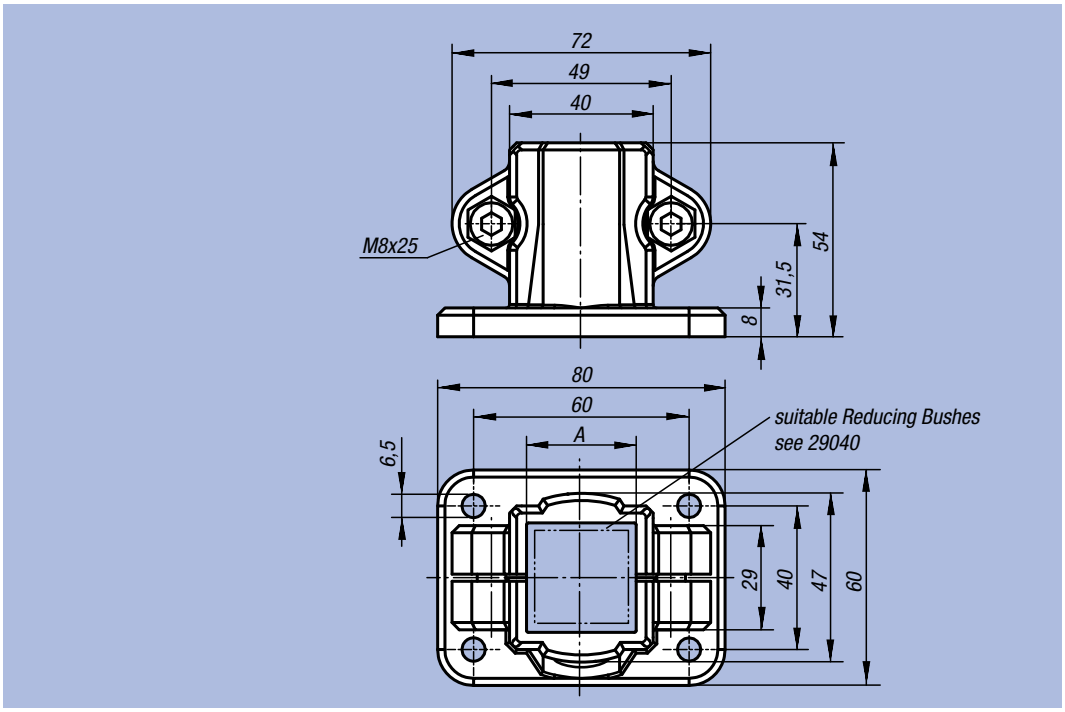

Order No.	A	kg
29012-30	30	0,121

nlm 29012

Base Clamps



Material, surface finish:
Cast aluminium, vibration ground, clamping screw with nut in galvanized steel

Sample order:
nlm 29012-5230

On request:
Clamp levers for fixing and further dimensions for square tubes.

Accessory:
- Round and Square Tubes 29050

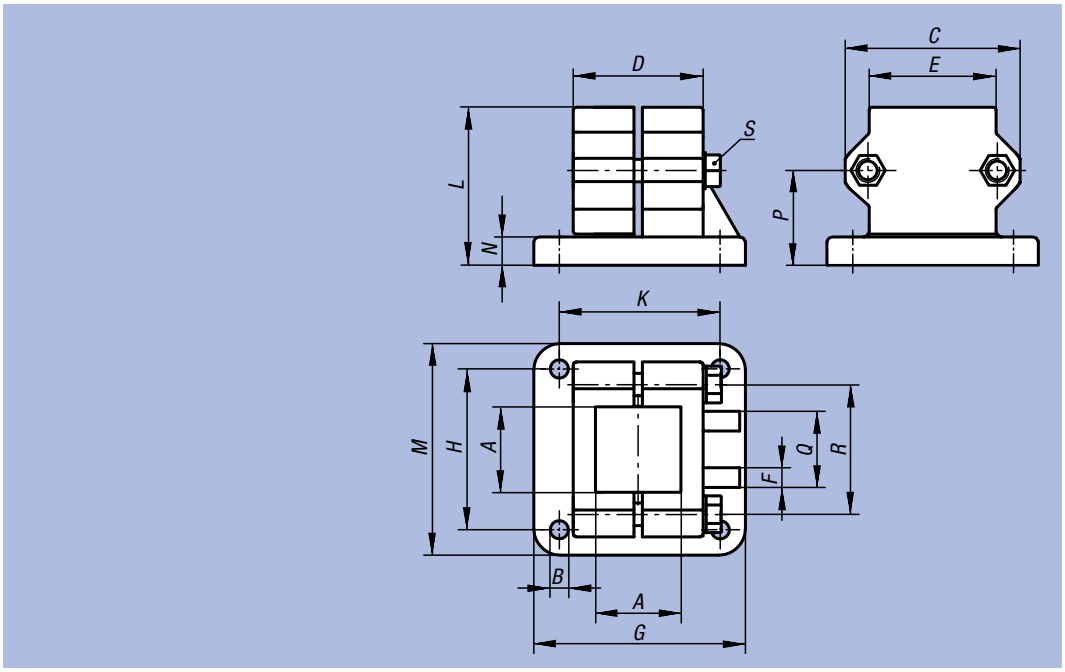

Order No.	A	B	C	D	E	F	G	H	K	L	M	N	P	Q	R	S	kg
29012-5230	30,3	6,5	62	45	45	5	75	57	57	56	75	10	33,5	25	46	M8x45	0,278
29012-5240	40,4	8,5	75	60	60	5	100	76	76	71	100	10	43	25	57	M8x60	0,570

Flange Clamps



Material, surface finish:
Black thermoplastic; socket head screw to DIN 7984 and hexagon nut to DIN 985 in galvanized steel

Sample order:
nlm 29014-18

Note:
The basic size for round tubes is Ø18 mm or Ø30 mm. If smaller tubes are to be clamped or converted from round to square tubes, these can be adjusted to the required fitting by means of Reducing Bushes 29042.

On request:
Clamp levers in plastic for fixing.

Accessory:
- Reducing Bushes 29042
- Round and Square Tubes 29050

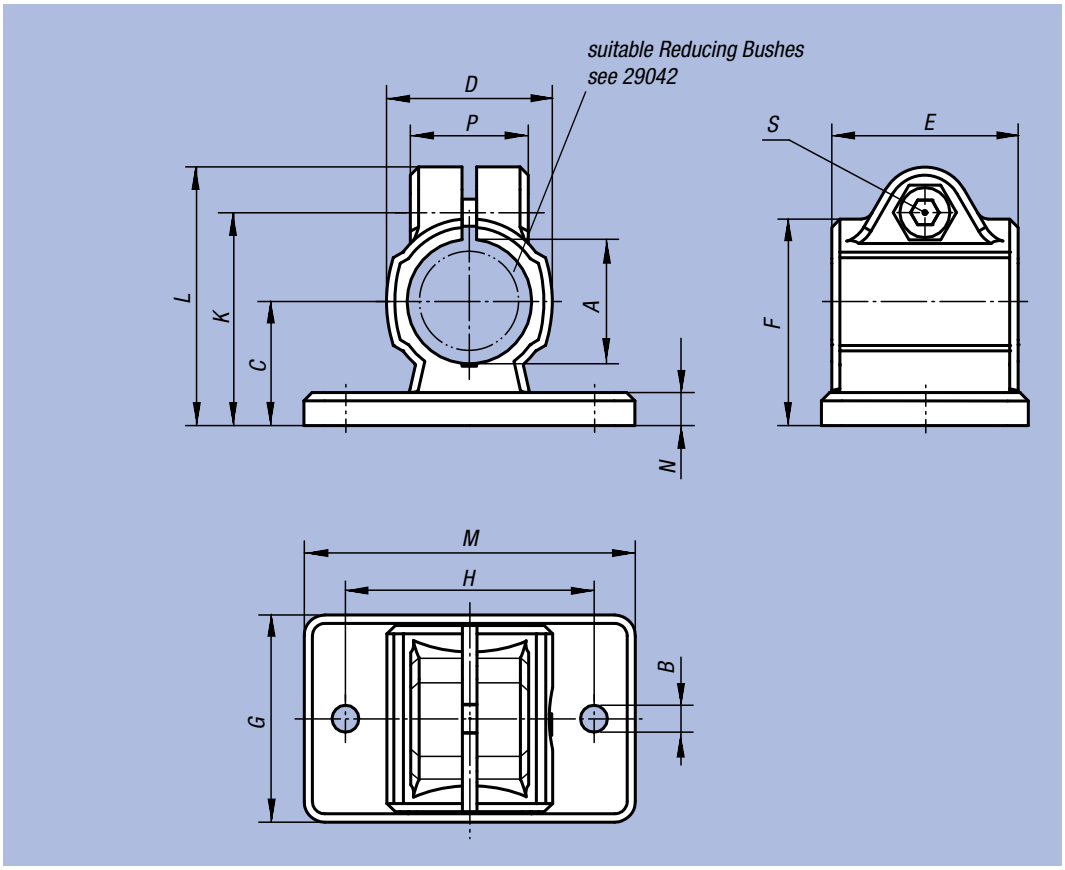

Order No.	A	B	C	D	E	F	G	H	K	L	M	N	P	S	kg
29014-18	18	5,3	18	25	30	30,5	35	40	32	39,5	50	5	21	M6x18	0,030
29014-30	30	6,5	30	40	45	50	50	60	51,5	62,5	80	8	28,5	M8x25	0,084

Flange Clamps



Material, surface finish:
Cast aluminium, vibration ground; socket head screw to DIN 7984 and hexagon nut to DIN 985 in galvanized steel

Sample order:
nlm 29014-518

Note:
* Oblong hole

On request:
Clamp levers for fixing and further diameters.

Accessory:
- Round and Square Tubes 29050

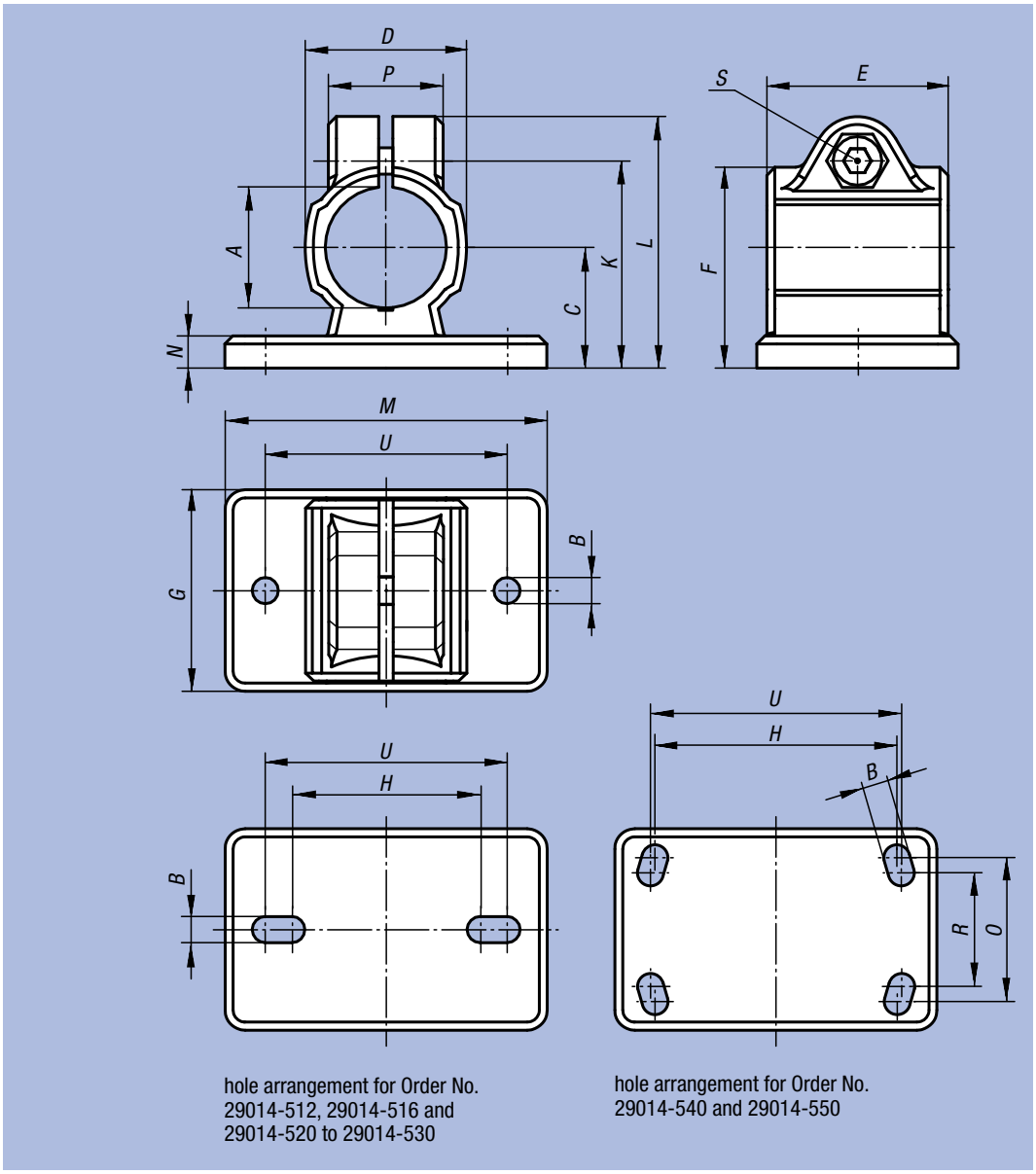

hole arrangement for Order No. 29014-512, 29014-516 and 29014-520 to 29014-530

hole arrangement for Order No. 29014-540 and 29014-550

Order No.	A	B	C	D	E	F	G	H	K	L	M	N	O	P	R	S	U	kg
29014-512	12,1	5,5* (2x)	18	26	32	31	35	38	32,5	41	50	5	-	23	-	M6x20	40	0,059
29014-514	14,1	5,5 (2x)	18	26	32	31	35	-	32,5	41	50	5	-	23	-	M6x20	40	0,063
29014-515	15,1	5,5 (2x)	18	26	32	31	35	-	32,5	41	50	5	-	23	-	M6x20	40	0,062
29014-516	16,1	5,5* (2x)	18	26	32	31	35	38	32,5	41	50	5	-	23	-	M6x20	40	0,060
29014-518	18,1	5,5 (2x)	18	26	32	31	35	-	32,5	41	50	5	-	23	-	M6x20	40	0,056
29014-520	20,1	6,5* (2x)	30	40	40	50	55	53	53	63	78	7	-	33	-	M8x25	60	0,197
29014-525	25,1	6,5* (2x)	30	40	40	50	55	53	53	63	78	7	-	33	-	M8x25	60	0,180
29014-530	30,1	6,5* (2x)	30	40	40	50	55	53	53	63	78	7	-	33	-	M8x25	60	0,159
29014-540	40,17	8,5* (4x)	42	56	60	70	80	80	74	87	105	10	60	40	52	M10x30	82	0,397
29014-550	50,17	10,5* (4x)	50	66	65	83	90	98	85	98	128	14	62	45	60	M10x35	100	0,628

Flange Clamps



Material, surface finish:
Cast aluminium, vibration ground, clamping screw with nut in galvanized steel

Sample order:
nlm 29014-5230

On request:
Clamp levers for fixing and further diameters.

Accessory:
- Round and Square Tubes 29050

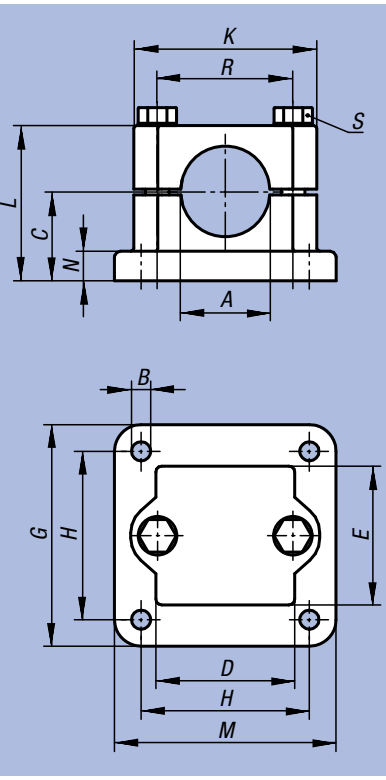

Order No.	A	B	C	D	E	G	H	K	L	M	N	R	S	kg
29014-5220	20,2	6,5	30	45	45	75	57	62	52,5	75	10	46	M8x50	0,314
29014-5225	25,2	6,5	30	45	45	75	57	62	52,5	75	10	46	M8x50	0,301
29014-5230	30,2	6,5	30	45	45	75	57	62	52,5	75	10	46	M8x50	0,285
29014-5240	40,2	8,5	40	60	60	100	76	75	70	100	10	57	M8x70	0,545

Flange Clamp



Material, surface finish:
Black thermoplastic; socket head screw to DIN 7984 and hexagon nut to DIN 985 in galvanized steel

Sample order:
nlm 29016-30

Note:
With the Flange Clamp square tubes 30 mm can be clamped. If smaller tubes are to be clamped or converted from square to round tubes, these can be adjusted to the required fitting by means of Reducing Bushes 29040.

On request:
Clamp levers in plastic for fixing.

Accessory:
- Reducing Bushes 29040
- Round and Square Tubes 29050

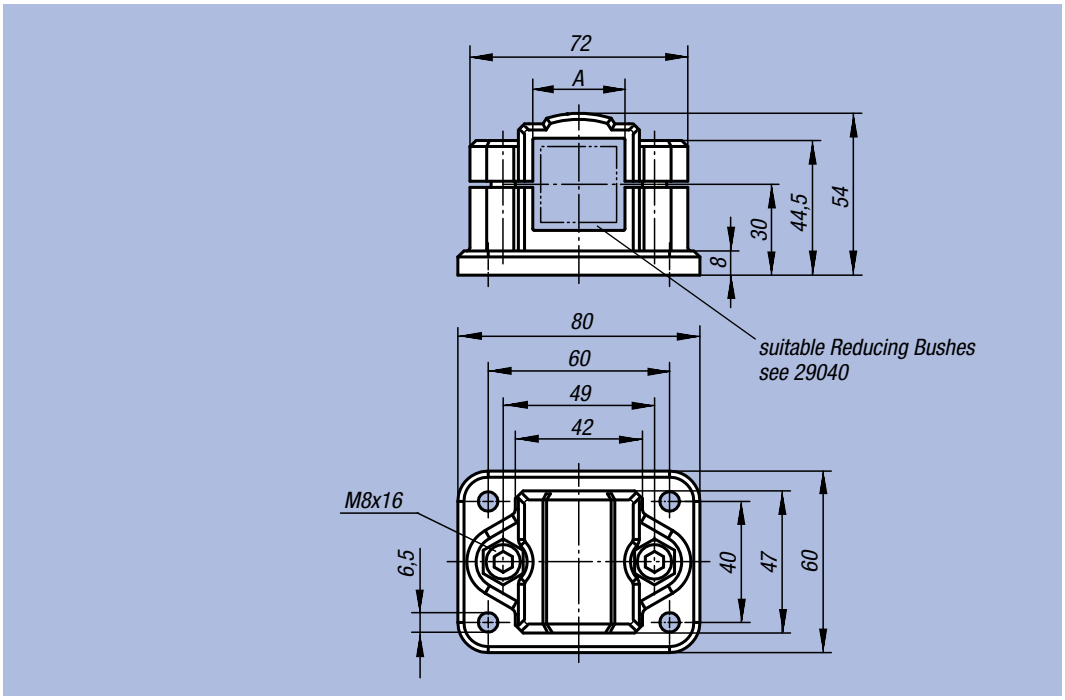

Order No.	A	kg
29016-30	30	0,125

nlm 29016

Flange Clamps



Material, surface finish:
Cast aluminium, vibration ground, clamping screw with nut in galvanized steel

Sample order:
nlm 29016-5230

On request:
Clamp levers for fixing and further dimensions for square tubes available.

Accessory:
- Round and Square Tubes 29050

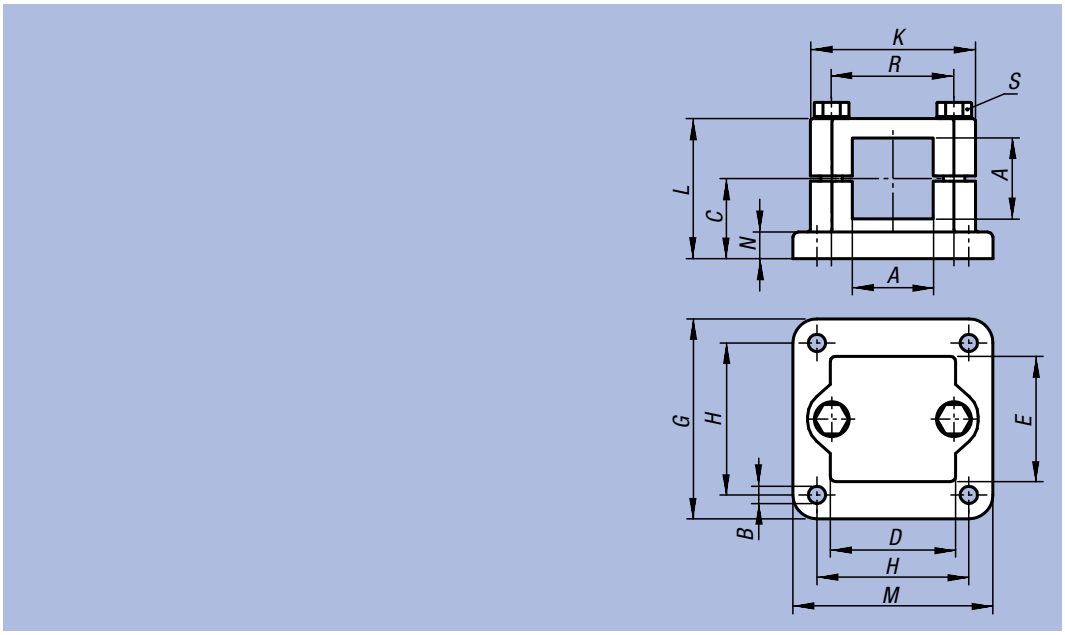

Order No.	A	B	C	D	E	G	H	K	L	M	N	R	S	kg
29016-5225	25,3	6,5	30	45	45	75	57	62	52,5	75	10	46	M8x50	0,292
29016-5230	30,3	6,5	30	45	45	75	57	62	52,5	75	10	46	M8x50	0,273
29016-5240	40,4	8,5	40	60	60	100	76	75	70	100	10	57	M8x70	0,530

Flange Clamp



Material, surface finish:
Black thermoplastic; socket head screw to DIN 7984 and hexagon nut to DIN 985 in galvanized steel

Sample order:
nlm 29018-30

Note:
With the Flange Clamp square tubes 30 mm can be clamped. If smaller tubes are to be clamped or converted from square to round tubes, these can be adjusted to the required fitting by means of Reducing Bushes 29040.

On request:
Clamp levers in plastic for fixing.

Accessory:
- Reducing Bushes 29040
- Round and Square Tubes 29050

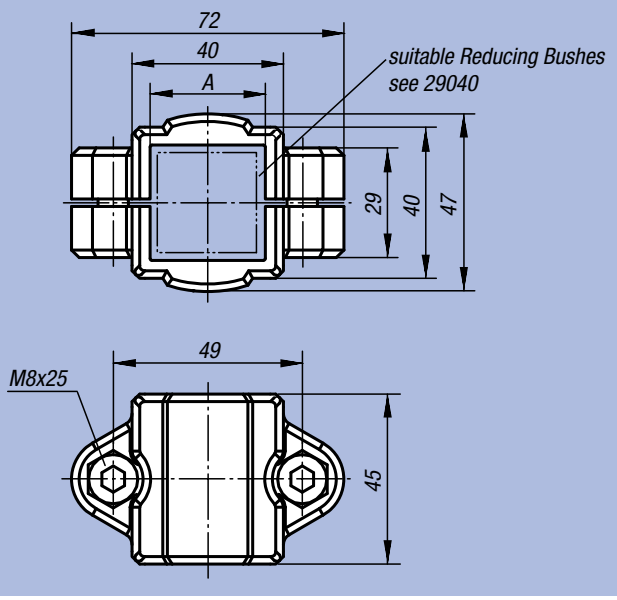

Order No.	A	kg
29018-30	30	0,090

Flange Clamp



Material, surface finish:
Black thermoplastic; socket head screw to DIN 7984 and hexagon nut to DIN 985 in galvanized steel

Sample order:
nlm 29020-30

Note:
With the Flange Clamp square tubes 30 mm can be clamped. If smaller tubes are to be clamped or converted from square to round tubes, these can be adjusted to the required fitting by means of Reducing Bushes 29040.

On request:
Clamp levers in plastic for fixing.

Accessory:
- Reducing Bushes 29040
- Round and Square Tubes 29050

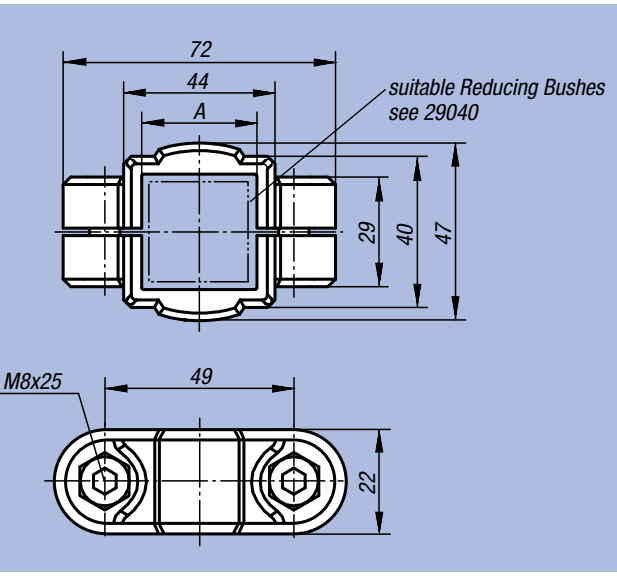

Order No.	A	kg
29020-30	30	0,068

Sleeve Clamps



Material, surface finish:
Black thermoplastic; socket head screw to DIN 7984 and hexagon nut to DIN 985 in galvanized steel

Sample order:
nlm 29022-18

Note:
The basic size for round tubes is Ø18 mm or Ø30 mm. If smaller tubes are to be clamped or converted from round to square tubes, these can be adjusted to the required fitting by means of Reducing Bushes 29042.

On request:
Clamp levers in plastic for fixing.

Accessory:
- Reducing Bushes 29042
- Round and Square Tubes 29050

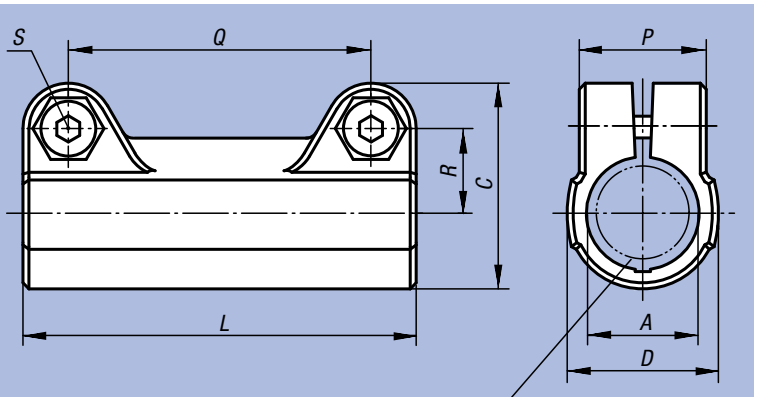

Order No.	A	C	D	L	P	Q	R	S	kg
29022-18	18	34	25	65	21	50	14	M6x18	0,028
29022-30	30	52,5	40	95	28,5	73	22,8	M8x25	0,087

Notes:

Strap Clamps

with internal toothing



Material, surface finish:
Black thermoplastic. Socket head screw according to DIN 7984 and hexagon nut to DIN 985 in galvanised steel

Sample order:
nlm 29024-18

Note:
Strap Clamps with internal toothing can be combined with Strap Clamps with external toothing (29026) to make a joint clamp.
The basic size for round tubes is Ø18 mm or Ø30 mm. If smaller tubes are to be clamped or converted from round to square tubes, these can be adjusted to the required fitting by means of Reducing Bushes 29042.

On request:
Clamp levers in plastic for fixing.

Accessory:
- Reducing Bushes 29042
- Round and Square Tubes 29050

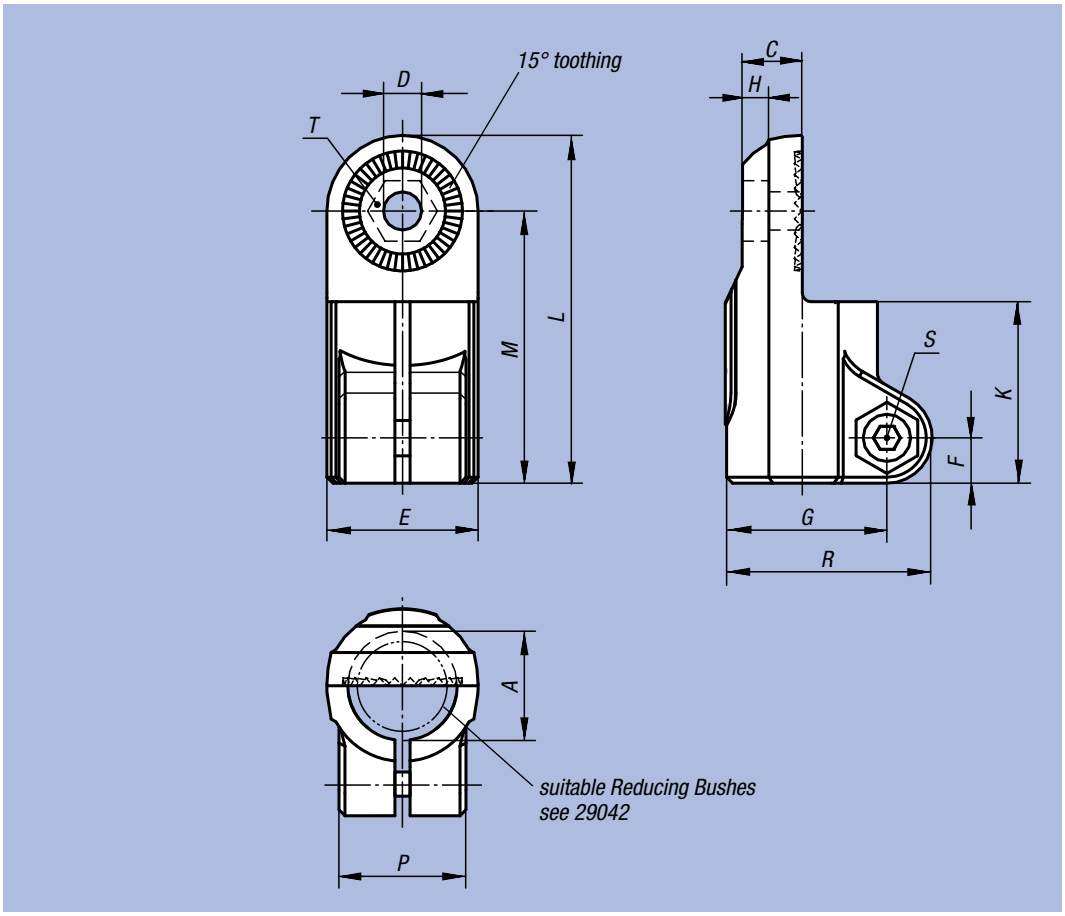

Order No.	A	C	D	E	F	G	H	K	L	M	P	R	S	T	kg
29024-18	18	9,9	6,1	25	7,5	26,5	5,9	30	57,5	45	21	34	M6x18	M6-DIN 985	0,028
29024-30	30	16,5	8,1	40	11	41,5	6,5	45	88	68	28,5	52,5	M8x25	M8-DIN 985	0,086

Strap Clamps

with external toothing



Material, surface finish:
Black thermoplastic; socket head screw to DIN 7984 and hexagon nut to DIN 985 in galvanized steel

Sample order:
nlm 29026-18

Note:
Strap Clamps with external toothing can be combined with Strap Clamps with internal toothing (29024, 29028 or 29030) to make a joint clamp. The basic size for round tubes is Ø18 mm or Ø30 mm. If smaller tubes are to be clamped or converted from round to square tubes, these can be adjusted to the required fitting by means of Reducing Bushes 29042.

On request:
Clamp levers in plastic for fixing.

Accessory:
- Reducing Bushes 29042
- Round and Square Tubes 29050

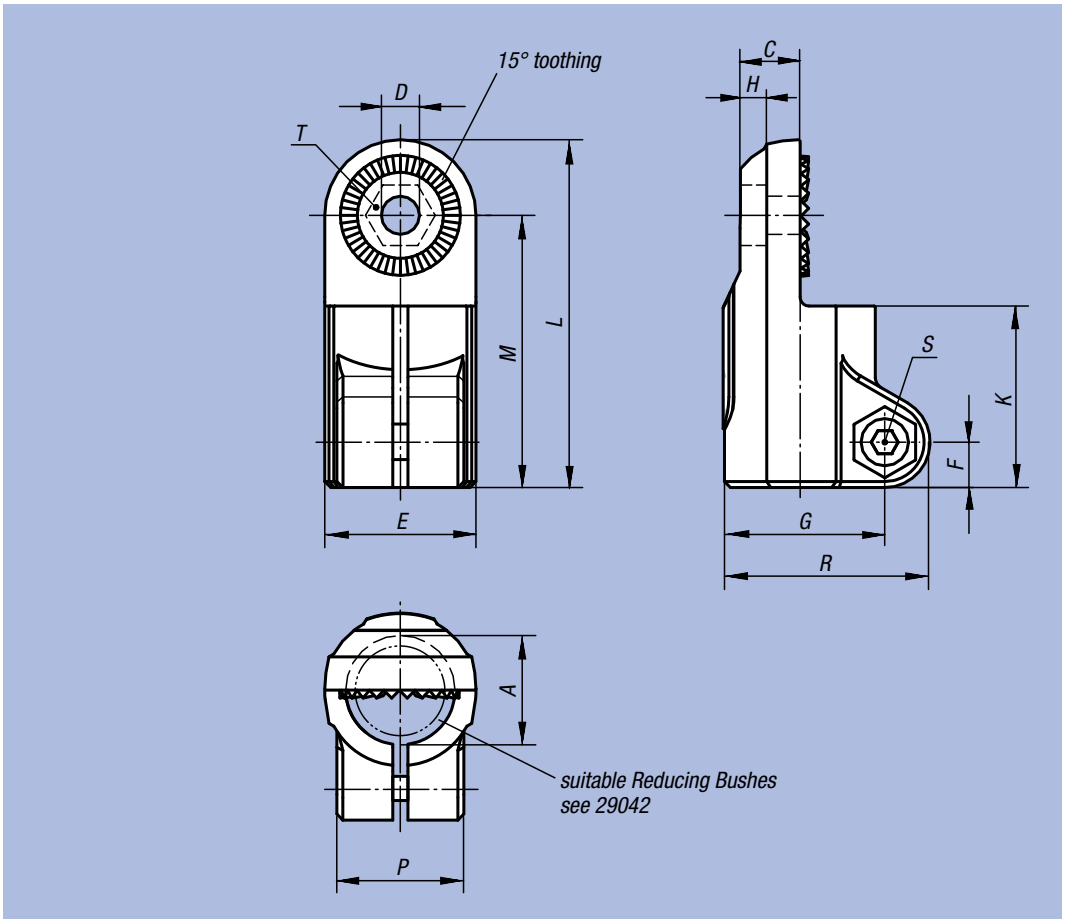

Order No.	A	C	D	E	F	G	H	K	L	M	P	R	S	T	kg
29026-18	18	9,9	6,1	25	7,5	26,5	5,9	30	57,5	45	21	34	M6x18	M6-DIN 985	0,028
29026-30	30	16,5	8,1	40	11	41,5	6,5	45	88	68	28,5	52,5	M8x25	M8-DIN 985	0,087

Strap Clamps

with internal toothing



Material, surface finish:
Black thermoplastic; socket head screw to DIN 7984 and hexagon nut to DIN 985 in galvanized steel

Sample order:
nlm 29028-18

Note:
Strap Clamps with internal toothing can be combined with Strap Clamps with external toothing (29026) to make a joint clamp.
The basic size for round tubes is Ø18 mm or Ø30 mm. If smaller tubes are to be clamped or converted from round to square tubes, these can be adjusted to the required fitting by means of Reducing Bushes 29042.

On request:
Clamp levers in plastic for fixing.

Accessory:
- Reducing Bushes 29042
- Round and Square Tubes 29050

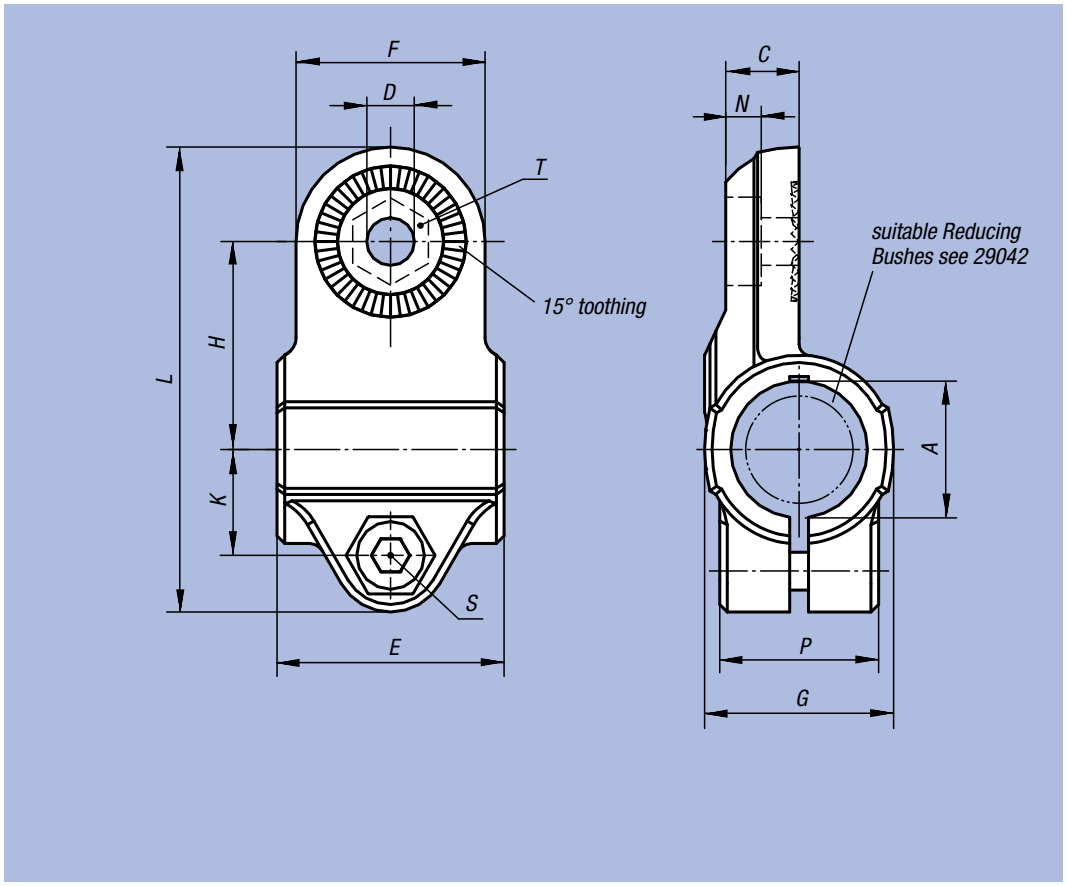

Order No.	A	C	D	E	F	G	H	K	L	N	P	S	T	kg
29028-18	18	9,7	6,1	30	25	25	27,5	14	61,5	5,7	21	M6x18	M6-DIN 985	0,029
29028-30	30	16,5	8,1	45	40	40	43	22,5	95,5	6,5	28,5	M8x25	M8-DIN 985	0,091

Strap Clamps

with internal toothing



Material, surface finish:
Black thermoplastic; socket head screw to DIN 7984 and hexagon nut to DIN 985 in galvanized steel

Sample order:
nlm 29030-18

Note:
Strap Clamps with internal toothing can be combined with Strap Clamps with external toothing (29026) to make a joint clamp.

On request:
Clamp levers in plastic for fixing.

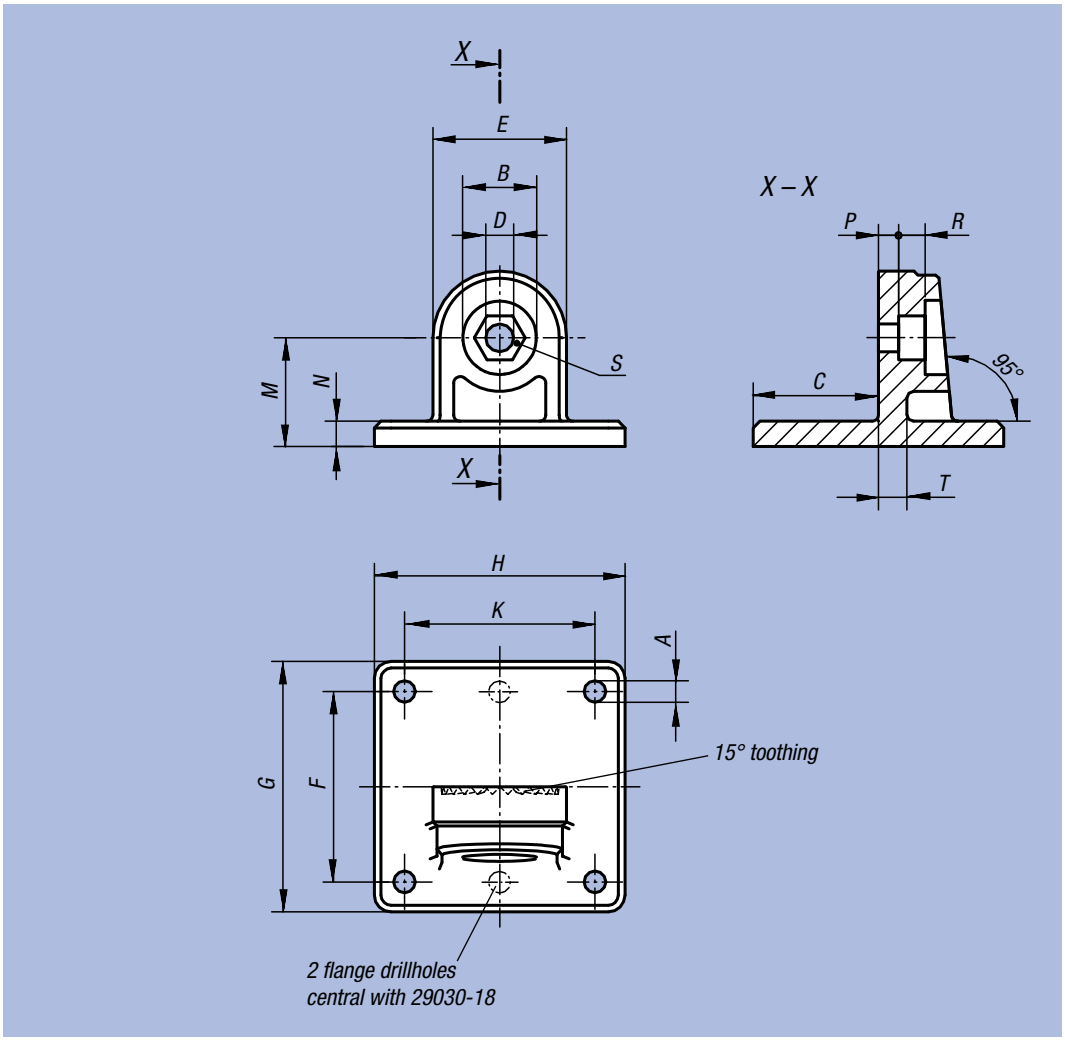

Order No.	A	B	C	D	E	F	G	H	K	M	N	P	R	S	T	kg
29030-18	5,3 (2x)	15	25	6,1	25	40	50	35	-	20	5	4,5	5,5	M6-DIN 985	5	0,017
29030-30	6,5 (4x)	22	37,5	8,1	40	60	75	75	60	32,5	7,5	6,6	8,2	M8-DIN 985	7	0,077

Joint Clamps

without toothing



Material, surface finish:
Black thermoplastic; socket head screw to DIN 7984 and hexagon nut to DIN 985 in galvanized steel

Sample order:
nlm 29032-18

Note:
Joint Clamps can be continuously displaced by 180°.
The basic size for round tubes is Ø18 mm or Ø30 mm. If smaller tubes are to be clamped or converted from round to square tubes, these can be adjusted to the required fitting by means of Reducing Bushes 29042.

On request:
Clamp levers in plastic for fixing.

Accessory:
- Reducing Bushes 29042
- Round and Square Tubes 29050

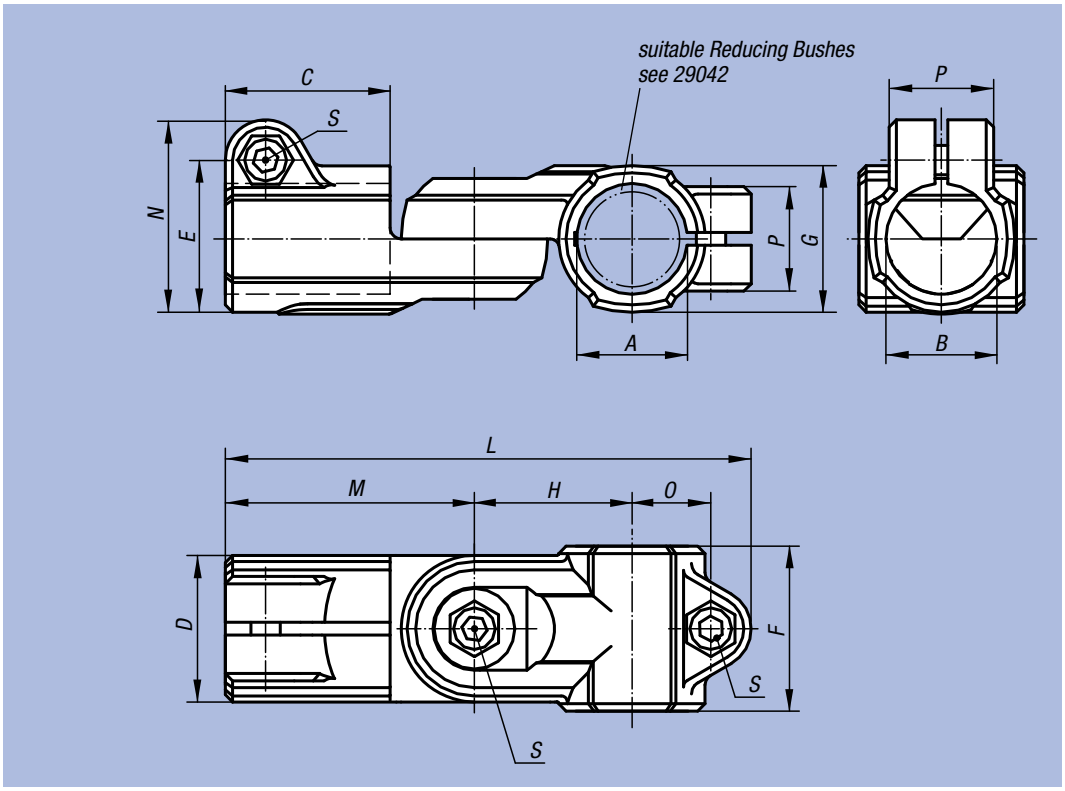

Order No.	A	B	C	D	E	F	G	H	L	M	N	O	P	S	kg
29032-18	18	18	30	25	26,5	30	25	27,5	94	45	34	14	21	M6x18	0,067
29032-30	30	30	45	40	41,5	45	40	43	143,5	68	52,5	22,5	28,5	M8x25	0,160

Joint Clamps

without toothing



Material, surface finish:
Cast aluminium, vibration ground; socket head screw to DIN 7984 and hexagon nut to DIN 985 in galvanized steel

Sample order:
nlm 29032-518

Note:
Joint Clamps can be continuously displaced by 180°.

On request:
Clamp levers for fixing and further diameters.

Accessory:
- Round and Square Tubes 29050

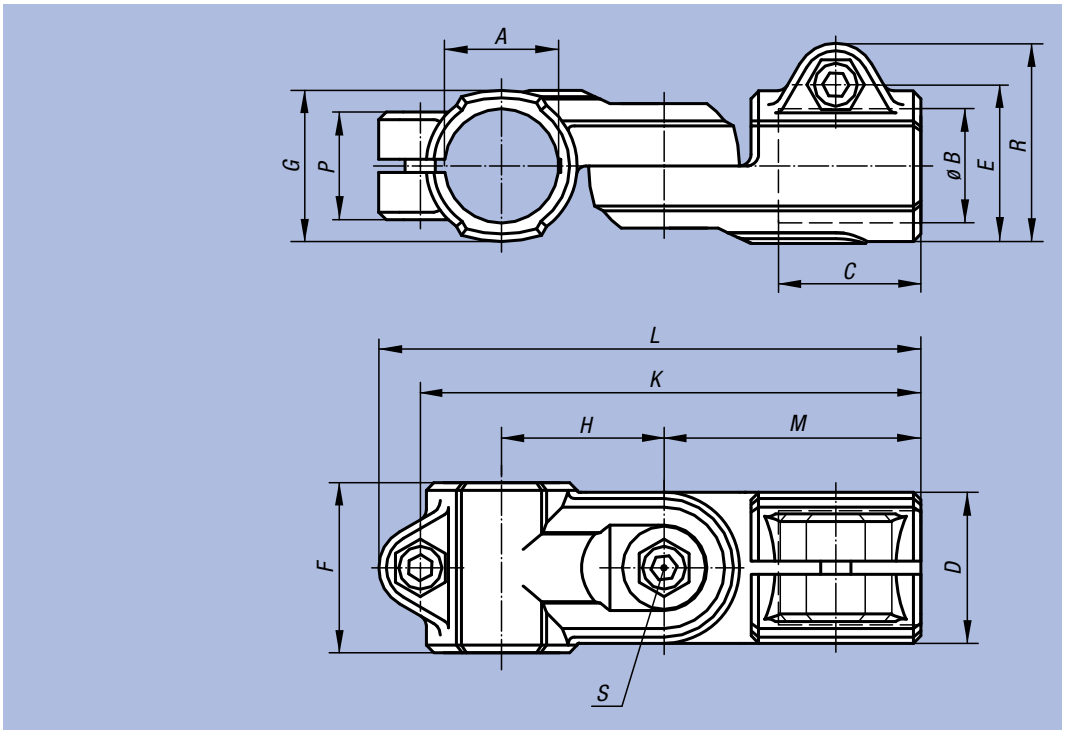

Order No.	A	B	C	D	E	F	G	H	K	L	M	P	R	S	kg
29032-512	12,1	12,1	25	26	29,4	30	26	27	84	95,5	44	21	37,5	M6x16	0,126
29032-514	14,1	14,1	25	26	29,4	30	26	27	84	95,5	44	21	37,5	M6x16	0,120
29032-516	16,1	16,1	25	26	29,4	30	26	27	84	95,5	44	21	37,5	M6x16	0,114
29032-518	18,1	18,1	25	26	29,4	30	26	27	84	95,5	44	21	37,5	M6x16	0,106
29032-520	20,1	20,1	45	40	40	-	40	43	136	146	73	33	51	M8x35	0,385
29032-525	25,1	25,1	45	40	40	-	40	43	136	146	73	33	51	M8x35	0,346
29032-530	30,1	30,1	45	40	40	-	40	43	136	146	73	33	51	M8x35	0,300
29032-540	40,2	40,2	60	56	56	-	56	60	188	200	100	48	70	M10x50	0,820

Joint Clamps

without toothing



Material, surface finish:
Black thermoplastic; socket head screw to DIN 7984 and hexagon nut to DIN 985 in galvanized steel

Sample order:
nlm 29034-18

Note:
Joint Clamps can be continuously displaced by 180°.
The basic size for round tubes is Ø18 mm or Ø30 mm. If smaller tubes are to be clamped or converted from round to square tubes, these can be adjusted to the required fitting by means of Reducing Bushes 29042.

On request:
Clamp levers in plastic for fixing.

Accessory:
- Reducing Bushes 29042
- Round and Square Tubes 29050

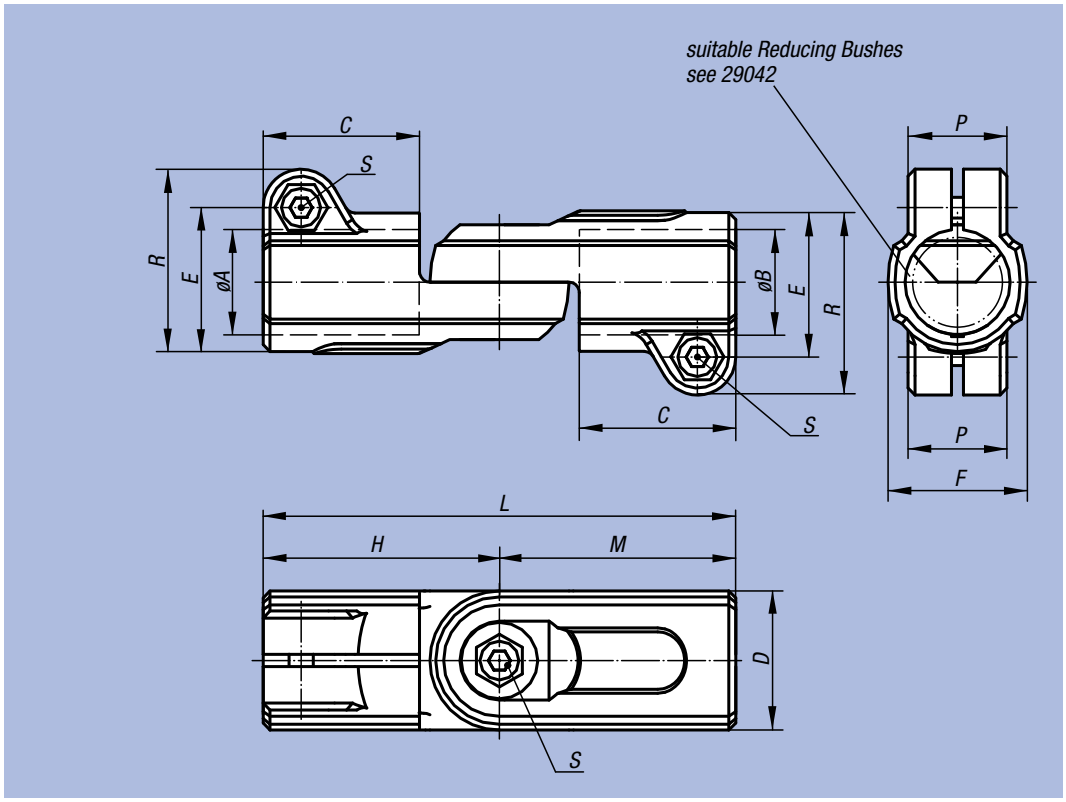

Order No.	A	B	C	D	E	F	H	L	M	P	R	S	kg
29034-18	18	18	30	25	26,5	25	45	90	45	21	34	M6x18	0,052
29034-30	30	30	45	40	41,5	40	68	136	68	28,5	52,5	M8x25	0,155

Joint Clamps

without toothing



Material, surface finish:
Cast aluminium, vibration ground; socket head screw to DIN 7984 and hexagon nut to DIN 985 in galvanized steel

Sample order:
nlm 29034-540

Note:
Joint Clamps can be continuously displaced by 180°.

On request:
Clamp levers for fixing and further diameters.

Accessory:
- Round and Square Tubes 29050

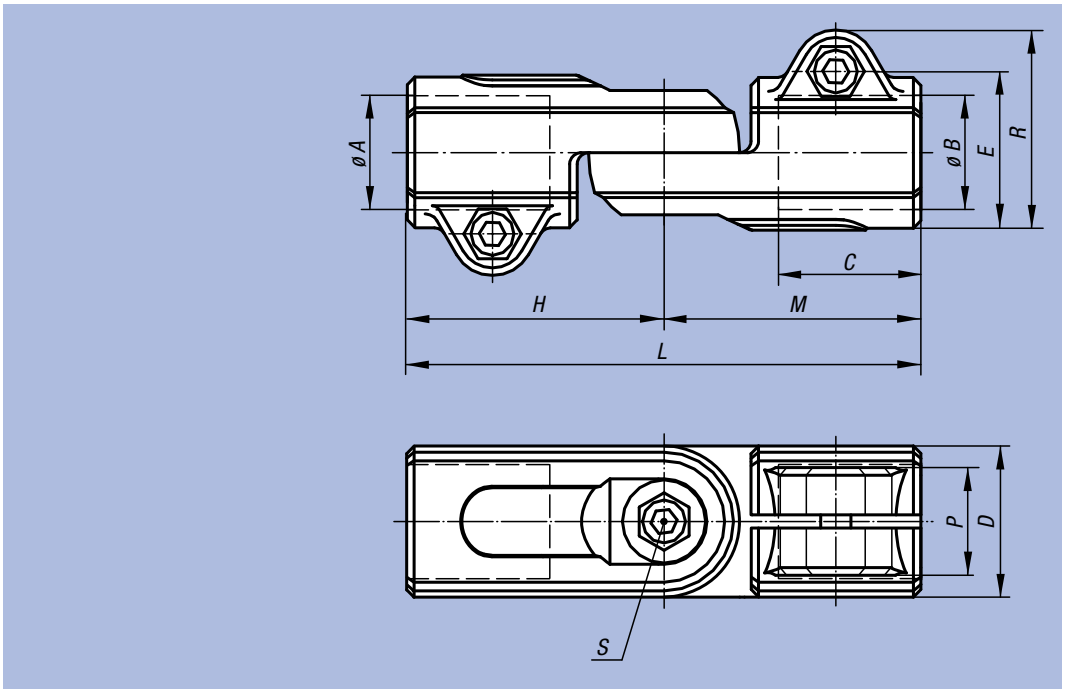

Order No.	A	B	C	D	E	H	L	M	P	R	S	kg
29034-512	12,1	12,1	25	26	29,4	44	88	44	21	37,5	M6x16	0,126
29034-514	14,1	14,1	25	26	29,4	44	88	44	21	37,5	M6x16	0,119
29034-516	16,1	16,1	25	26	29,4	44	88	44	21	37,5	M6x16	0,123
29034-518	18,1	18,1	25	26	29,4	44	88	44	21	37,5	M6x16	0,104
29034-520	20	20	45	40	40	73	146	73	33	51	M8x35	0,408
29034-525	25,1	25,1	45	40	40	73	146	73	33	51	M8x35	0,374
29034-530	30,1	30,1	43	40	40	73	146	73	33	51	M8x35	0,317
29034-540	40,15	40,15	59	56	58	100	200	100	48	70	M10x50	0,863

Joint Clamps

without toothing



Material, surface finish:
Black thermoplastic; socket head screw to DIN 7984 and hexagon nut to DIN 985 in galvanized steel

Sample order:
nlm 29036-18

Note:
Joint Clamps can be continuously displaced by 180°.
The basic size for round tubes is Ø18 mm or Ø30 mm. If smaller tubes are to be clamped or converted from round to square tubes, these can be adjusted to the required fitting by means of Reducing Bushes 29042.

On request:
Clamp levers in plastic for fixing.

Accessory:
- Reducing Bushes 29042
- Round and Square Tubes 29050

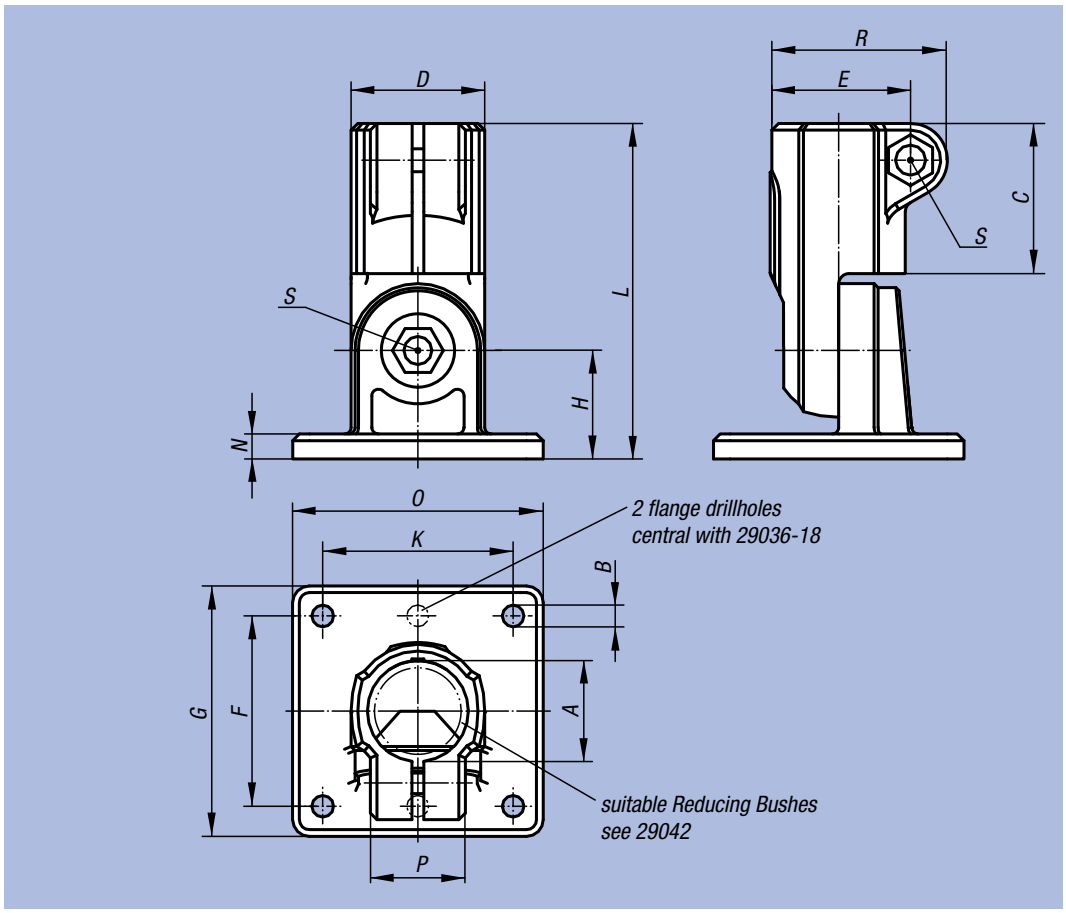

Order No.	A	B	C	D	E	F	G	H	K	L	N	O	P	R	S	kg
29036-18	18	5,3 (2x)	30	25	26,5	40	50	20	-	65	5	35	21	34	M6x18	0,055
29036-30	30	6,5 (4x)	45	40	41,5	60	75	32,5	60	100,5	7,5	75	28,5	52,5	M8x25	0,154

Joint Clamps

without toothing



Material, surface finish:
Cast aluminium, vibration ground; socket head screw to DIN 7984 and hexagon nut to DIN 985 in galvanized steel

Sample order:
nlm 29036-518

Note:
Joint Clamps can be continuously displaced by 180°.

* Oblong hole

On request:
Clamp levers for fixing and further diameters.

Accessory:
- Round and Square Tubes 29050

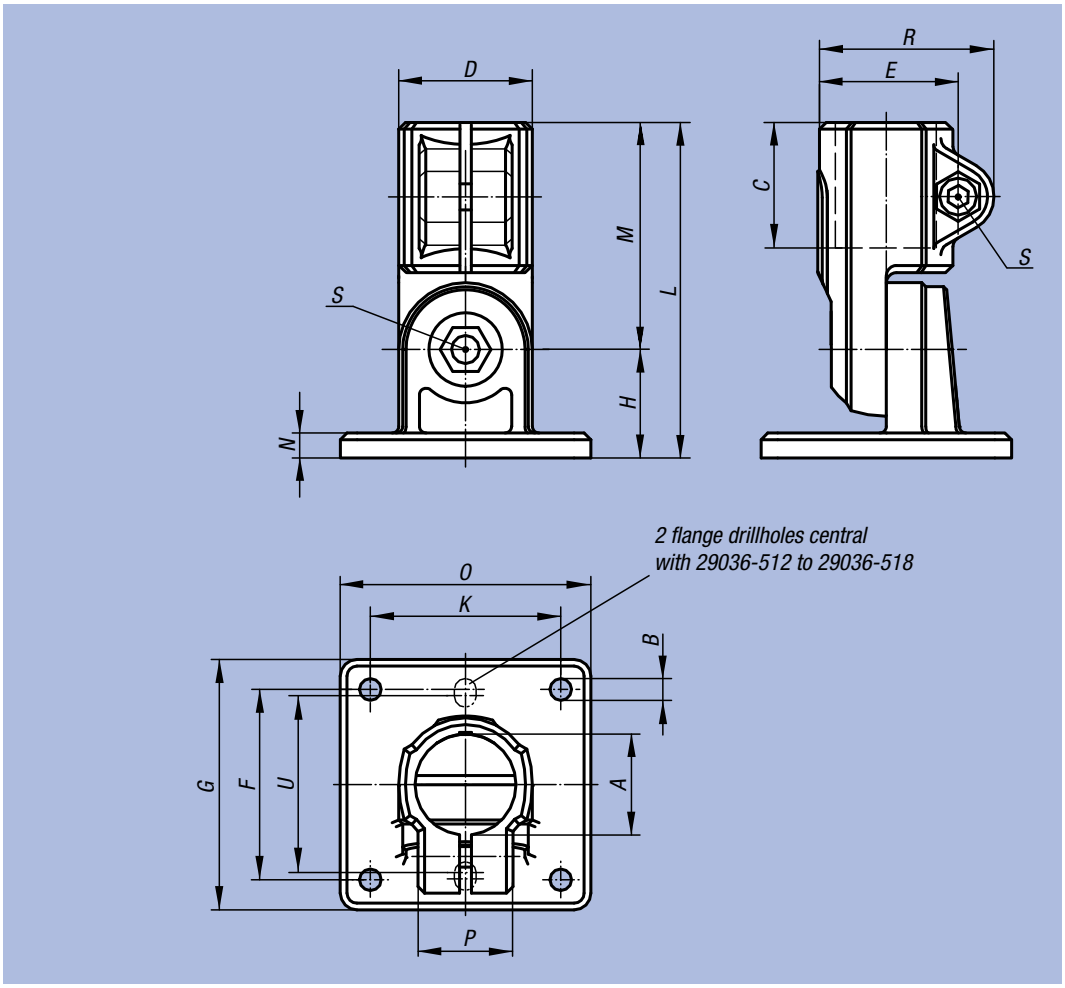

Order No.	A	B	C	D	E	F	G	H	K	L	M	N	O	P	R	S	U	kg
29036-512	12,1	5,3* (2x)	25	26	29,4	40	50	20	-	64	44	5	35	21	37,5	M6x16	38	0,101
29036-514	14,1	5,3* (2x)	25	26	29,4	40	50	20	-	64	44	5	35	21	37,5	M6x16	38	0,098
29036-516	16,1	5,3* (2x)	25	26	29,4	40	50	20	-	64	44	5	35	21	37,5	M6x16	38	0,095
29036-518	18,1	5,3* (2x)	25	26	29,4	40	50	20	-	64	44	5	35	21	37,5	M6x16	38	0,091
29036-520	20	6,5 (4x)	45	40	40	57	75	33	57	106	73	7	75	33	51	M8x35	-	0,383
29036-525	25,1	6,5 (4x)	45	40	40	57	75	33	57	106	73	7	75	33	51	M8x35	-	0,374
29036-530	30,1	6,5 (4x)	45	40	40	57	75	33	57	106	73	7	75	33	51	M8x35	-	0,325
29036-540	40,2	8,5 (4x)	60	56	56	76	100	44	76	144	100	10	100	48	68	M10x50	-	0,838

Reducing Bushes

square

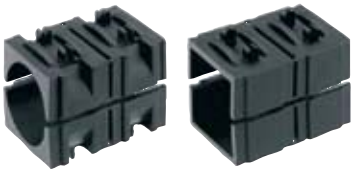

Material, surface finish:
Black thermoplastic

Sample order:
nlm 29040-03020

Note:
With the use of Reducing Bushes, smaller tubes can be clamped or converted from square tubes to round ones.

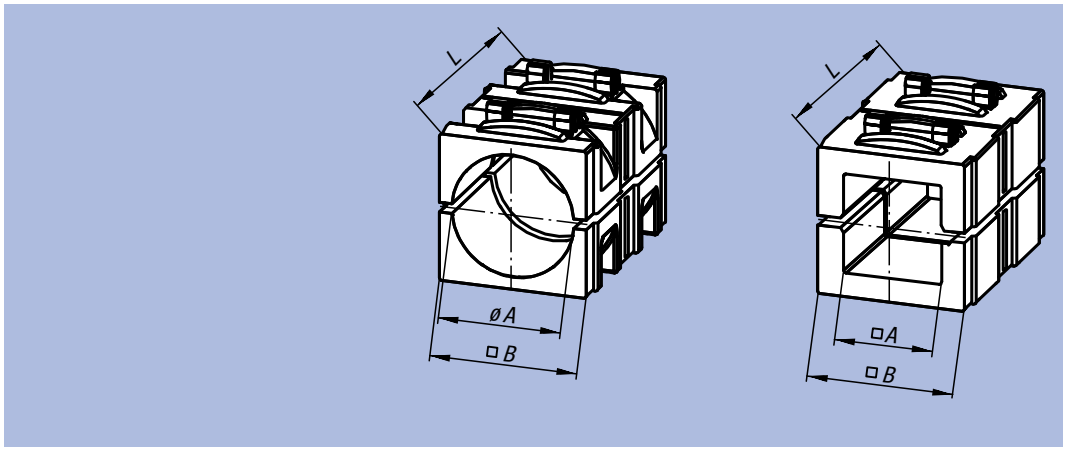

Order No.	Surface finish	A	B	L	Suitable for
29040-03020	for round tubes	Ø 20,25	30,3	45	29002 / 29004 / 29008 / 29012 / 29016 / 29018 / 29020
29040-03025	for round tubes	Ø 25,25	30,3	45	
29040-03030	for round tubes	Ø 30,25	30,3	45	
29040-13020	for square tubes	20,5	30,3	45	
29040-13025	for square tubes	25,5	30,3	45	

Reducing Bushes

round



Material, surface finish:
Black thermoplastic

Sample order:
nlm 29042-03020

Note:
With the use of Reducing Bushes, smaller tubes can be clamped or converted from round tubes to square ones.

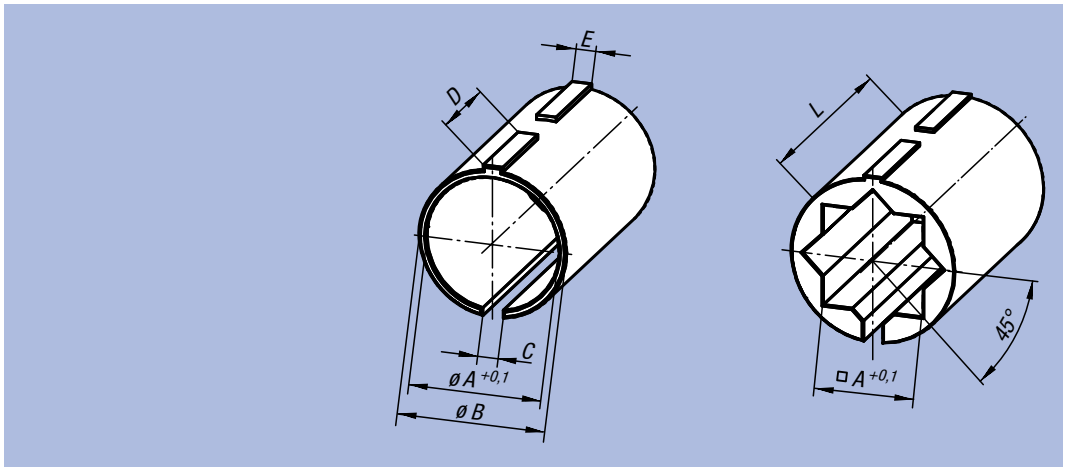

Order No.	Surface finish	A	B	C	D	E	L	Suitable for
29042-01812	for round tubes	12,25	18	2,5	11,9	2,4	30	29000 / 29004 / 29006 / 29010 / 29014 / 29022 / 29024 / 29026 / 29028 / 29032 / 29034 / 29036
29042-01814	for round tubes	14,25	18	2,5	11,9	2,4	30	
29042-01815	for round tubes	15,25	18	2,5	11,9	2,4	30	
29042-01816	for round tubes	16,25	18	2,5	11,9	2,4	30	
29042-03020	for round tubes	20,25	30	3,5	18,9	3,4	45	
29042-03025	for round tubes	25,25	30	3,5	18,9	3,4	45	
29042-11810	for square tubes	10,25	18	2,5	11,9	2,4	30	
29042-13020	for square tubes	20,25	30	3,5	18,9	3,4	45	

Round and Square Tubes



Material, surface finish:
Galvanized steel 1.0037;
aluminium EN AW-6060, light anodized

Sample order:
nlm 29050-0112X500
(please also indicate dimension L)

Note:
The manufacturing tolerances of the round and square tubes are dependent on the specific tube fixing system.

* Aluminium bar

On request:
- stainless steel tubes
- aluminium tubes, black anodized
- customer specific shapes

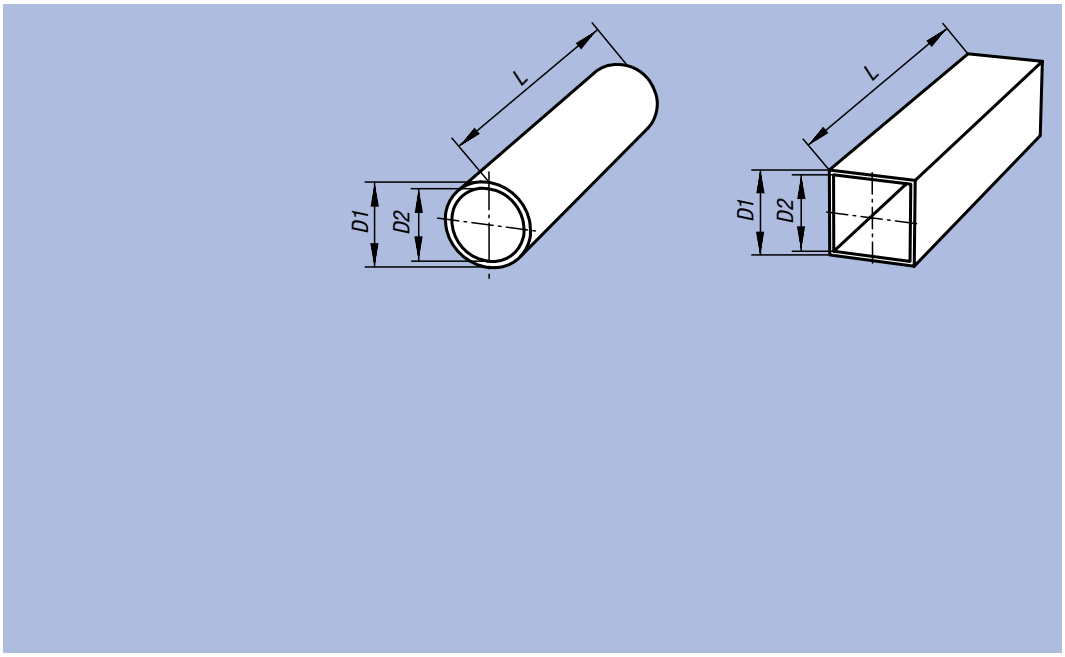

Order No.	Surface finish	Material	Description	D1	D2	L
29050-0112X	round tubes	steel	Ø12 x 1,5	12 ±0,08	9	500 / 1000 / 2000
29050-0114X	round tubes	steel	Ø14 x 1,5	14 ±0,08	11	500 / 1000 / 2000
29050-0115X	round tubes	steel	Ø15 x 1,5	15 ±0,08	12	500 / 1000 / 2000
29050-0116X	round tubes	steel	Ø16 x 1,5	16 ±0,08	13	500 / 1000 / 2000
29050-0118X	round tubes	steel	Ø18 x 1,5	18 ±0,08	15	500 / 1000 / 2000
29050-0120X	round tubes	steel	Ø20 x 2	20 ±0,08	16	500 / 1000 / 2000
29050-0125X	round tubes	steel	Ø25 x 2	25 ±0,08	21	500 / 1000 / 2000
29050-0130X	round tubes	steel	Ø30 x 2	30 ±0,08	26	500 / 1000 / 2000
29050-0140X	round tubes	steel	Ø40 x 4	40 ±0,15	32	500 / 1000 / 2000
29050-0150X	round tubes	steel	Ø50 x 4	50 ±0,2	42	500 / 1000 / 2000
29050-0220X	round tubes	aluminium	Ø20 x 3	20	14	500 / 1000 / 2000
29050-0225X	round tubes	aluminium	Ø25 x 2	25	21	500 / 1000 / 2000
29050-0230X	round tubes	aluminium	Ø30 x 2	30 ±0,1	26	500 / 1000 / 2000
29050-0240X	round tubes	aluminium	Ø40 x 3	40 ±0,15	34	500 / 1000 / 2000
29050-0250X	round tubes	aluminium	Ø50 x 3	50 ±0,2	44	500 / 1000 / 2000

Order No.	Surface finish	Material	Description	D1	D2	L
29050-4120X	square tubes	steel	20 x 20 x 1	20 ±0,3	18	500 / 1000 / 2000
29050-4125X	square tubes	steel	25 x 25 x 1,5	25 ±0,3	22	500 / 1000 / 2000
29050-4130X	square tubes	steel	30 x 30 x 2	30 ±0,3	26	500 / 1000 / 2000
29050-4140X	square tubes	steel	40 x 40 x 3	40 ±0,4	34	500 / 1000 / 2000
29050-4210X	square tubes	aluminium	10 x 10	10*	-	500 / 1000 / 2000
29050-4220X	square tubes	aluminium	20 x 20 x 1,5	20 ±0,2	17	500 / 1000 / 2000
29050-4230X	square tubes	aluminium	30 x 30 x 2	30 ±0,2	26	500 / 1000 / 2000
29050-4240X	square tubes	aluminium	40 x 40 x 4	40 ±0,3	32	500 / 1000 / 2000

Tube Stoppers



Material, surface finish:
Black thermoplastic

Sample order:
nlm 29056-025200

Note:
Tube Stoppers are used as edge protectors or for the closure of tube ends. Mounting can be by pushing them in by hand or by knocking them in with a soft-face hammer.

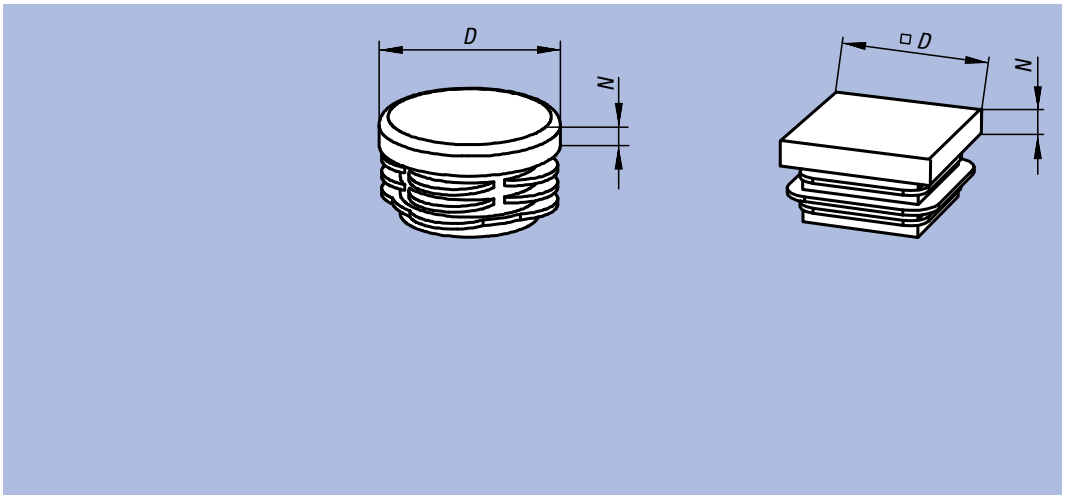

Order No.	Surface finish	D	N	Suitable for
29056-018150	for round tubes	18	5	Ø18 x 1,5
29056-020200	for round tubes	20	5	Ø20 x 2
29056-025200	for round tubes	25	5	Ø25 x 2
29056-030200	for round tubes	30	5	Ø30 x 2
29056-040300	for round tubes	40	5	Ø40 x 3
29056-040400	for round tubes	40	5	Ø40 x 4
29056-050400	for round tubes	50	5	Ø50 x 3 / Ø50 x 4
29056-420100	for square tubes	20	5	20 x 20 x 1
29056-425150	for square tubes	25	5	25 x 25 x 1,5
29056-430200	for square tubes	30	5	30 x 30 x 2
29056-440300	for square tubes	40	5	40 x 40 x 3
29056-440400	for square tubes	40	5	40 x 40 x 4

Technical Information on the Tubular Linear Unit

The Tubular Linear Unit is economical and cost-effective and universally usable. High rigidity, low deflection, high loads and easy handling are ideally combined in the linear unit. Four sizes of linear units are available for different applications and loads (guide tubes ranging from Ø18 mm to Ø50 mm).

Features:
- Travel of more than 2000 mm possible
- Position accuracy up to ±0.2 mm / 300 mm
- Travelling speed up to 1.5 m/min
- Driven by ACME threaded spindle
- Installation as desired

Technical description:
A threaded spindle with corresponding guide nut which is supported in the guide tube converts a rotating movement into a linear movement of the guide carriage. This is protected against torsion by a drive key.

Fixation of the linear unit:
According to the installation and application, the linear unit can be fixed by means of fixing elements.
The clamping elements of the tubular connection system are available for this.

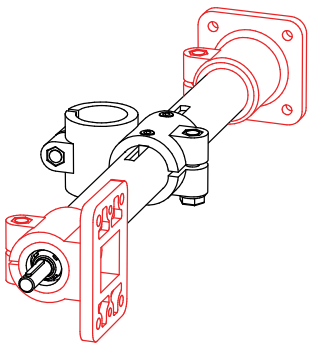

Speed:
n = required spindle r.p.m.

spindle revolution per minute max. with:
slide bearing 80 r.p.m.
ball bearing 250 r.p.m.

Type E	Pitch mm
18	2
30	3
40	4
50	4

$$n\ [r.p.m.] = \frac{\text{speed [m/min] x 1000 [mm]}}{\text{pitch [mm]}}$$

No-load torques:

Type E	Spindle with slide bearing [Nm]	Spindle with ball bearing [Nm]
18	-	0,20
30	0,45	0,35
40	0,65	0,50
50	1,20	0,90

Load data*:
F force [N]
M moment [Nm]
I geom. moment of inertia [cm⁴]

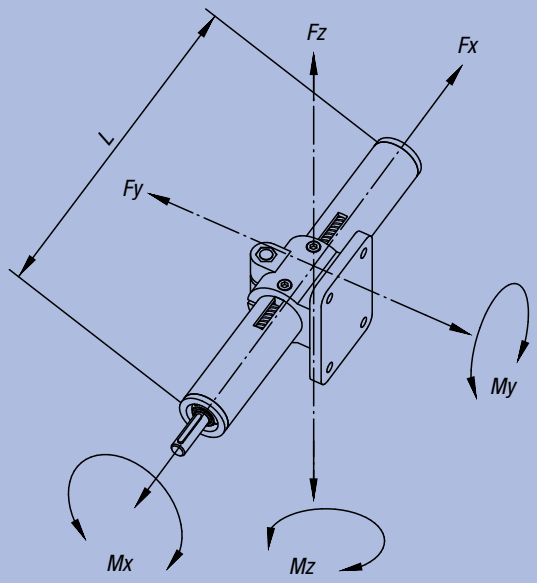

Length	Fx 500	Fy 500 / 1000 / 1500	Fz 500 / 1000 / 1500
Type E 18	400	90 / 10 / -	60 / 8 / -
Type E 30	800	500 / 60 / 10	500 / 50 / 9
Type E 40	1000	2100 / 250 / 60	1900 / 140 / 50
Type E 50	1700	3000 / 600 / 140	3000 / 600 / 140

Type E	M_x	M_y	M_z	I_y	I_z
18	1,5	4	4	0,22	0,27
30	6	15	15	1,34	1,56
40	14	40	40	4,58	5,24
50	30	65	65	11,31	12,32

* referring to the guide carriage (guide element deflection f = 0.5 mm, static, end elements supported)

Linear Units



Material, surface finish:
Precision tube according to DIN EN 10305, stainless steel 1.4301. For type E 18, galvanized steel. Trapezoidal thread spindle steel, clockwise thread, rolled.

Sample order:
nlm 29105-300001X500

Note:
Medium rotation speed range, self-locking.
If using a position indicator, only use linear units with ball bearings.

On request:
Left-hand thread, stainless steel finish, 2 drive cones, further strokes or handwheels.

Accessory:
- Clamp Guides 29120, 29125, 29130, 29135
- Clamping Elements of the tubular connection system
- Digital Position Indicators 21904 with Adapter for position indicator 29190 and Insert Plate 21942

Function principle:
A rotating movement of the threaded spindle is converted into a linear movement of the guide carriage.

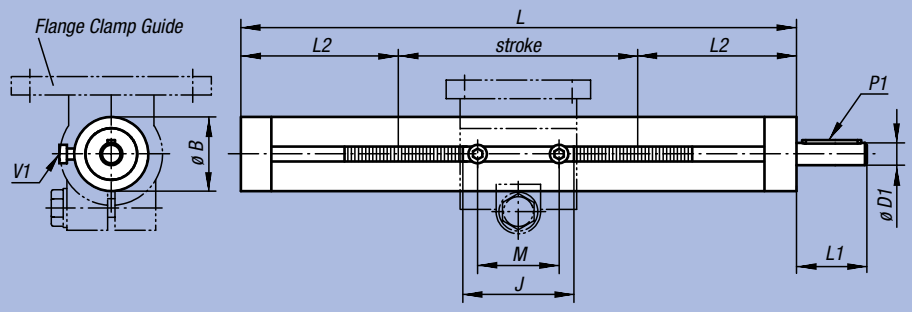

Linear Unit 29105-18...

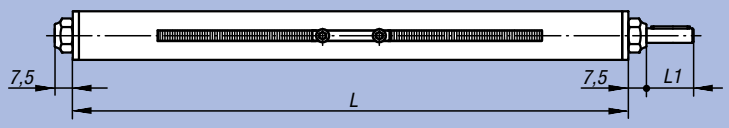

Order No.	Surface finish	Type E	Spindle	L Standard length	Stroke	B	D1	J	L1	L2	M	P1 feather to DIN 6885	V1	kg
29105-300001X300	slide bearing	30	Tr 14x3	300	100	30	8 h8	38	26	100	28	2 x 2 x 20	M4x8	0,800
29105-300001X500	slide bearing	30	Tr 14x3	500	300	30	8 h8	38	26	100	28	2 x 2 x 20	M4x8	1,276
29105-300001X800	slide bearing	30	Tr 14x3	800	600	30	8 h8	38	26	100	28	2 x 2 x 20	M4x8	1,947
29105-400001X300	slide bearing	40	Tr 20x4	300	91	40	12 h8	55	38	104,5	44	4 x 4 x 32	M6x10	1,984
29105-400001X500	slide bearing	40	Tr 20x4	500	291	40	12 h8	55	38	104,5	44	4 x 4 x 32	M6x10	2,920
29105-400001X800	slide bearing	40	Tr 20x4	800	591	40	12 h8	55	38	104,5	44	4 x 4 x 32	M6x10	4,785
29105-400001X1000	slide bearing	40	Tr 20x4	1000	791	40	12 h8	55	38	104,5	44	4 x 4 x 32	M6x10	5,865
29105-500001X500	slide bearing	50	Tr 20x4	500	265	50	12 h8	63	38	117,5	44	4 x 4 x 32	M6x10	4,368
29105-500001X800	slide bearing	50	Tr 20x4	800	565	50	12 h8	63	38	117,5	44	4 x 4 x 32	M6x10	6,288
29105-500001X1000	slide bearing	50	Tr 20x4	1000	765	50	12 h8	63	38	117,5	44	4 x 4 x 32	M6x10	7,568
29105-180101X300	ball bearing	18	Tr 10x2	300	145	18	6 h9	24	17	77,5	18	2 x 2 x 12	M3x5	0,355
29105-180101X500	ball bearing	18	Tr 10x2	500	345	18	6 h9	24	17	77,5	18	2 x 2 x 12	M3x5	0,550
29105-300101X300	ball bearing	30	Tr 14x3	300	100	30	8 h8	38	26	100	28	2 x 2 x 20	M4x8	0,800
29105-300101X500	ball bearing	30	Tr 14x3	500	300	30	8 h8	38	26	100	28	2 x 2 x 20	M4x8	1,276
29105-300101X800	ball bearing	30	Tr 14x3	800	600	30	8 h8	38	26	100	28	2 x 2 x 20	M4x8	1,947
29105-400101X300	ball bearing	40	Tr 20x4	300	91	40	12 h8	55	38	104,5	44	4 x 4 x 32	M6x10	1,984
29105-400101X500	ball bearing	40	Tr 20x4	500	291	40	12 h8	55	38	104,5	44	4 x 4 x 32	M6x10	2,920
29105-400101X800	ball bearing	40	Tr 20x4	800	591	40	12 h8	55	38	104,5	44	4 x 4 x 32	M6x10	4,785
29105-400101X1000	ball bearing	40	Tr 20x4	1000	791	40	12 h8	55	38	104,5	44	4 x 4 x 32	M6x10	5,865
29105-500101X500	ball bearing	50	Tr 20x4	500	265	50	12 h8	63	38	117,5	44	4 x 4 x 32	M6x10	4,368
29105-500101X800	ball bearing	50	Tr 20x4	800	565	50	12 h8	63	38	117,5	44	4 x 4 x 32	M6x10	6,288
29105-500101X1000	ball bearing	50	Tr 20x4	1000	765	50	12 h8	63	38	117,5	44	4 x 4 x 32	M6x10	7,568

Cross Clamp Guides



Material, surface finish:
Cast aluminium, black powder-coated; socket head screw to DIN 7984 and hexagon nut to DIN 985 in galvanized steel

Sample order:
nlm 29120-1818

On request:
Clamp levers for fixing.

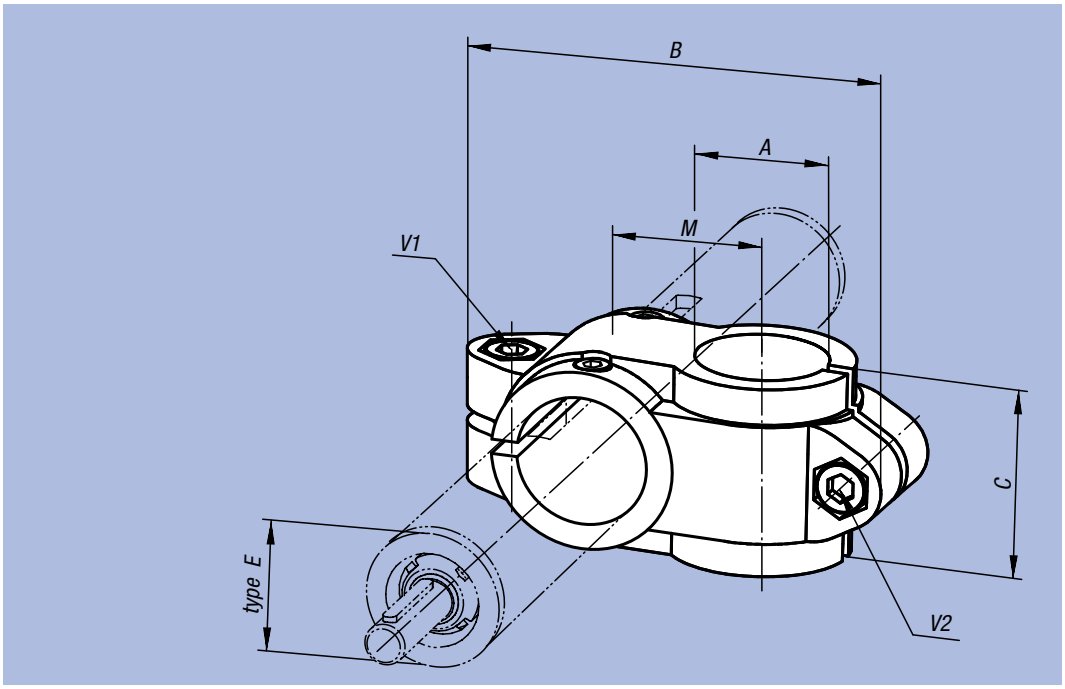

Order No.	Type	A	B	C	M	V1	V2
29120-1818	18	18	66	25,5	20	M6x16	M6x16
29120-3020	30	20	99	40	33	M8x25	M8x25
29120-3030	30	30	99	40	33	M8x25	M8x25
29120-4020	40	20	109	40	36	M10x30	M8x25
29120-4040	40	40	137	60	45	M10x30	M10x30
29120-5040	50	40	154	70	54	M10x35	M10x35
29120-5050	50	50	154	70	54	M10x35	M10x35

Cross Clamp Guides



Material, surface finish:
Cast aluminium, black powder-coated; clamping screw with nut in galvanized steel

Sample order:
nlm 29125-4040

On request:
Clamp levers for fixing.

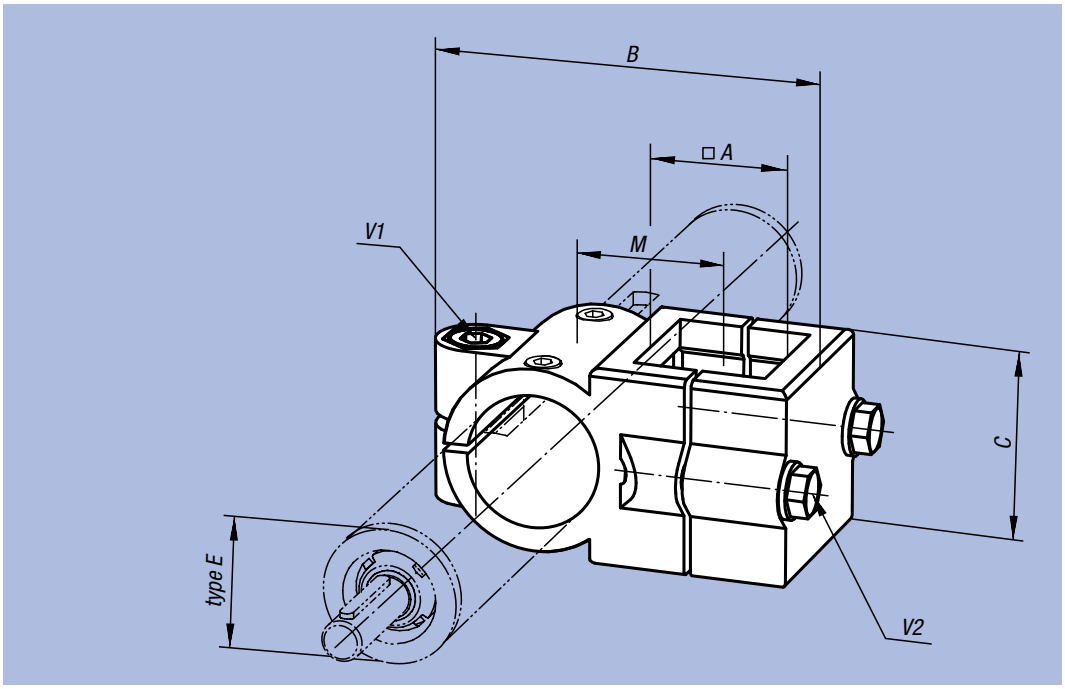

Order No.	Type	A	B	C	M	V1	V2
29125-3030	30	30	86	45	33	M8x35	M8x35
29125-4040	40	40	117	60	47	M10x50	M8x45
29125-5050	50	50	126	86	53	M8x50	M8x50

Flange Clamp Guides



Material, surface finish:
Cast aluminium, black powder-coated; socket head screw to DIN 7984 and hexagon nut to DIN 985 in galvanized steel

Sample order:
nlm 29130-50

Note:
* Oblong hole.

On request:
Clamp levers for fixing.

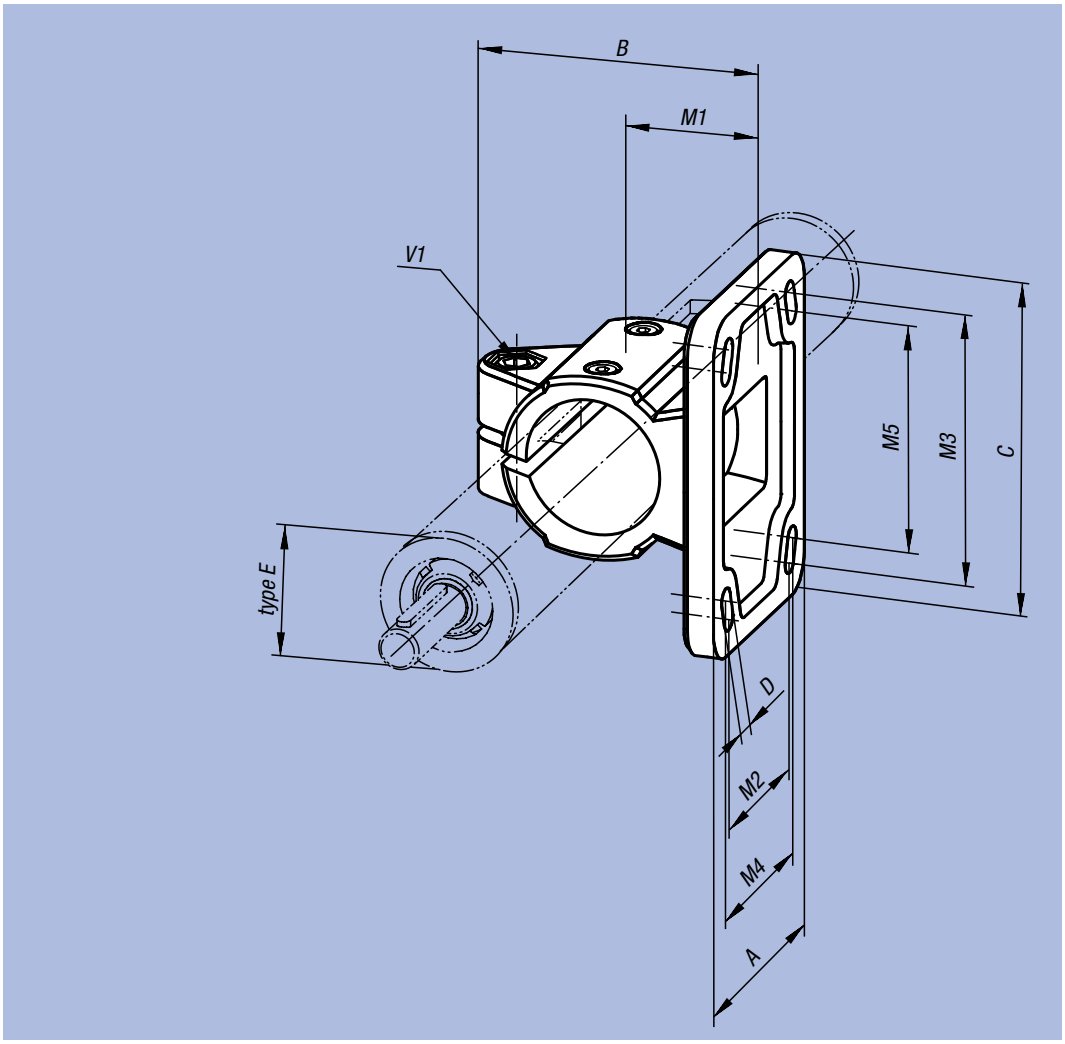

Order No.	Type	A	B	C	D	M1	M2	M3	M4	M5	V1
29130-18	18	37	42,5	50	5,5 (2x)	18	-	40	-	-	M6x16
29130-30	30	55	63	78	6,5* (2x)	30	-	60	-	53	M8x25
29130-40	40	80	87	105	8,5* (4x)	42	52	82	60	80	M10x30
29130-50	50	92	100	130	10,5* (4x)	50	60	100	62	98	M10x35

Base Clamp Guides



Material, surface finish:
Cast aluminium, black powder-coated; socket head screw to DIN 7984 and hexagon nut to DIN 985 in galvanized steel

Sample order:
nlm 29135-30

Note:
* Oblong hole.

On request:
Clamp levers for fixing.

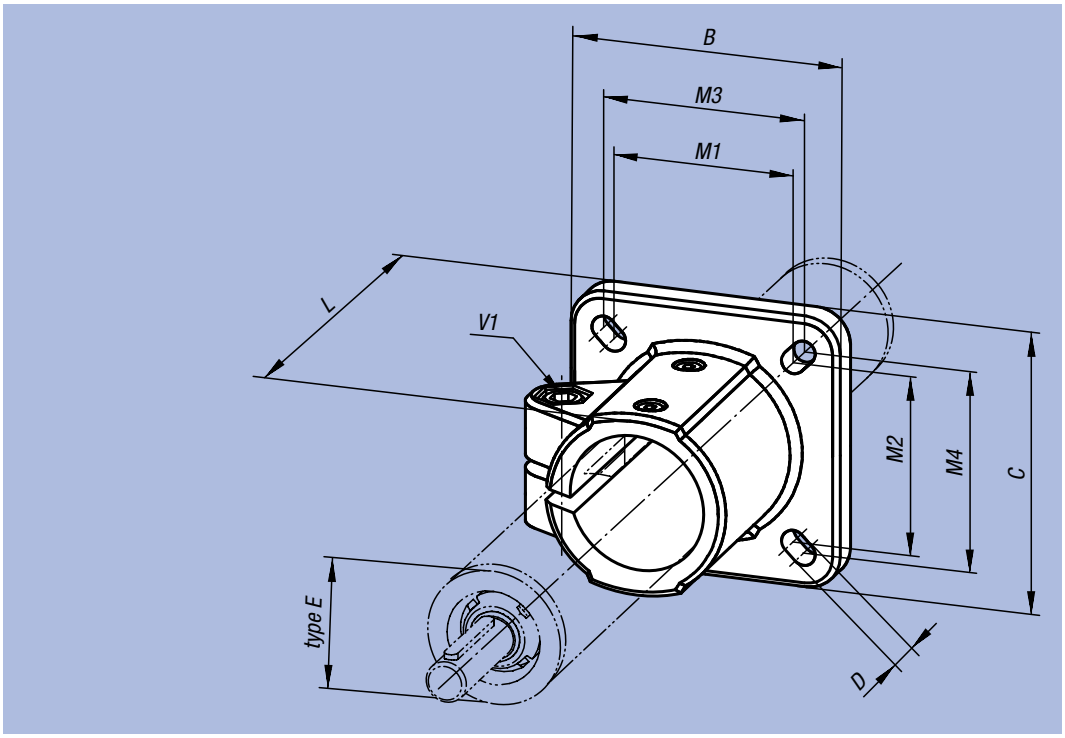

Order No.	Type	B	C	D	L	M1	M2	M3	M4	V1
29135-18	18	42	42	5,8	37	30	30	-	-	M6x16
29135-30	30	60	60	6,5*	50	40	45	42	42	M8x25
29135-40	40	90	90	8,5*	70	60	60	64	64	M10x30
29135-50	50	105	105	10,5*	85	74	74	80	80	M10x35

Adapter

for position indicators

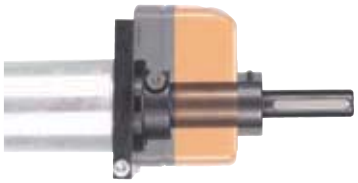

Material, surface finish:
Torsion protection and shaft in aluminium, black anodized; feather to DIN 6885; grub screw in stainless steel; clamping screw in galvanized steel or stainless steel

Sample order:
nlm 29190-18

Note:
Digital position indicators can be attached to linear units with ball bearings with the help of the Adapter. As a rule a counter is used, this being regulated by the pitch of the ACME threaded spindle. This means that the indicator corresponds after one rotation of the spindle to the spindle pitch.

Accessory:
- Digital Position Indicators 21904
- Insert Plate 21942

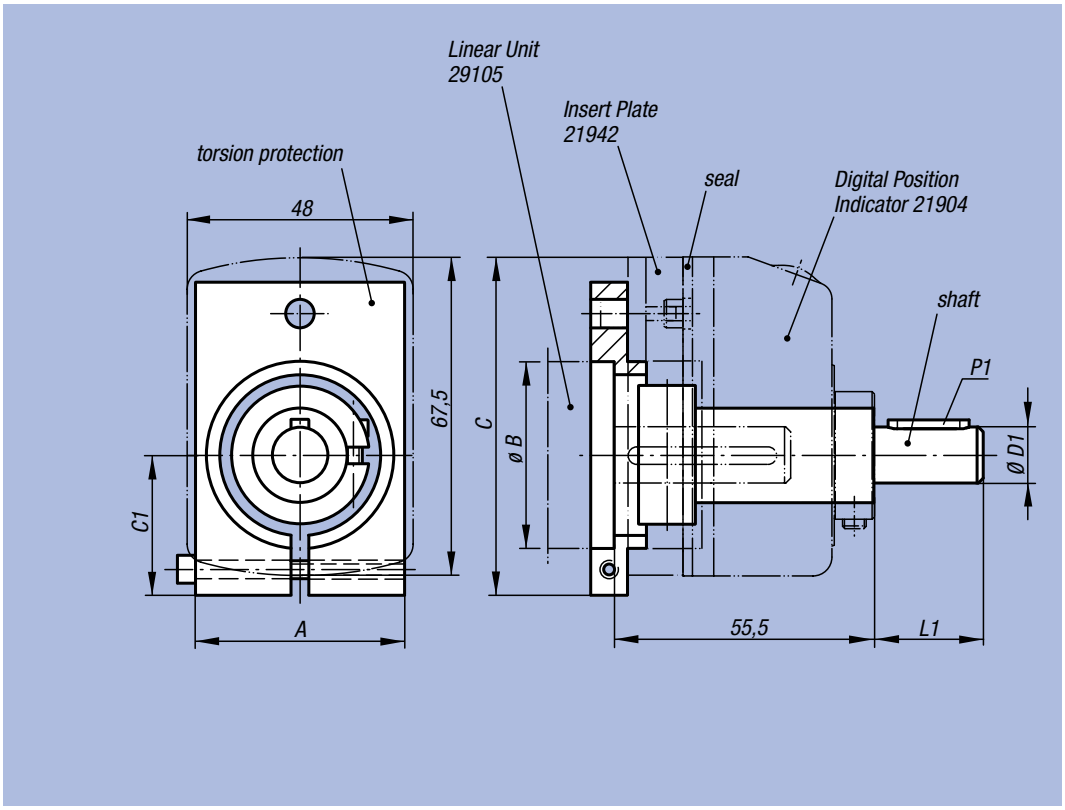

Order No.	Suitable for type E	A	B	C	C1	D1	L1	P1 feather to DIN 6885
29190-18	18	45	18	71	29	6	17	2 x 2 x 12
29190-30	30	45	30	66	24	8	18	2 x 2 x 12
29190-40	40	45	40	71	29	12	38	4 x 4 x 32
29190-50	50	56	50	75	33	12	38	4 x 4 x 32

Base, single



Material:
Aluminium EN AW-6060

Surface finish:
Black anodized

Sample order:
nlm 29200-1122

Note:
Base, single, for support of columns in four different sizes. Machined contact surfaces with integrated assembly and centring drill holes guarantee position-precise assembly of components.



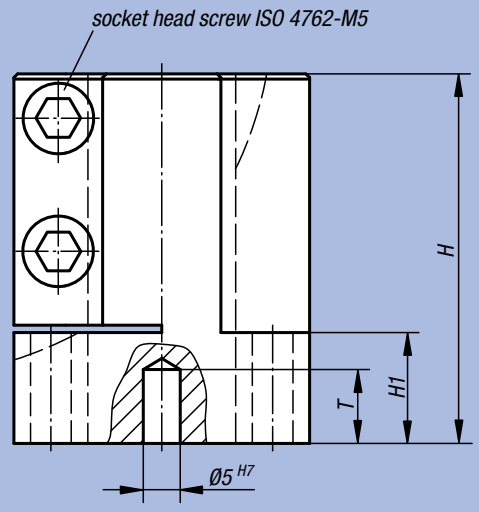

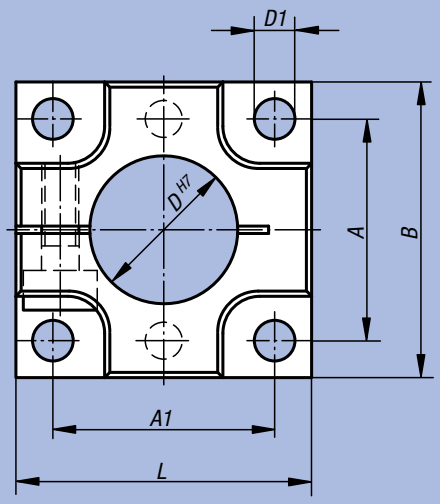

position tolerance of locating holes: ±0,01
position tolerance of holes: ±0,1

Order No.	Size	A	A1	B	D	D1	H	H1	L	T	kg
29200-1122	12	22	22	30	12	5,5	35	7	30	8	0,047
29200-1202	20	30	30	40	20	5,5	50	15	40	10	0,120
29200-1302	30	40	40	50	30	6,5	50	15	50	10	0,190
29200-1402	40	48	48	60	40	8,5	50	15	60	10	0,295

Base, double



Material:
Aluminium EN AW-6060

Surface finish:
Black anodized

Sample order:
nlm 29205-2122

Note:
Base, double, for support of columns in four different sizes. Machined contact surfaces with integrated assembly and centring drill holes guarantee position-precise assembly of components.



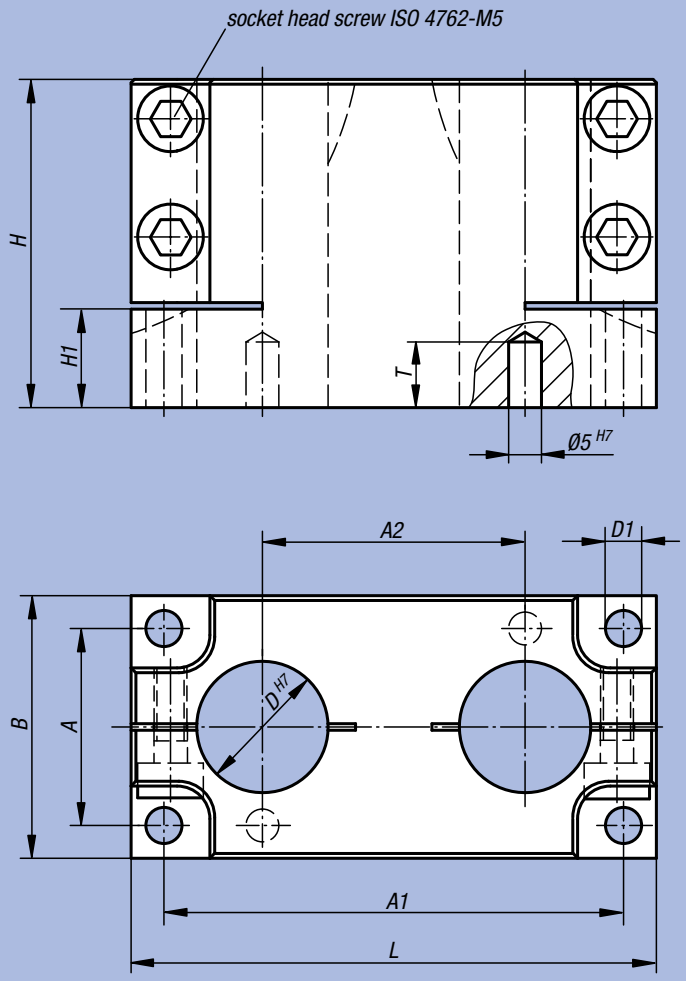

position tolerance of locating holes: ±0,01
position tolerance of holes: ±0,1

Order No.	Size	A	A1	A2	B	D	D1	H	H1	L	T	kg
29205-2122	12	22	52	30	30	12	5,5	35	7	60	8	0,120
29205-2202	20	30	70	40	40	20	5,5	50	15	80	10	0,290
29205-2302	30	40	90	50	50	30	6,5	50	15	100	10	0,422
29205-2402	40	48	108	60	60	40	8,5	50	15	120	10	0,567

Clamp Base, double



Material:
Aluminium EN AW-6060

Surface finish:
Black anodized

Sample order:
nlm 29207-2122

Note:
Clamp base, double, in four different sizes. Machined assembly surfaces with integrated assembly and centring drill holes guarantee position-precise assembly of components.

sizes 12/20

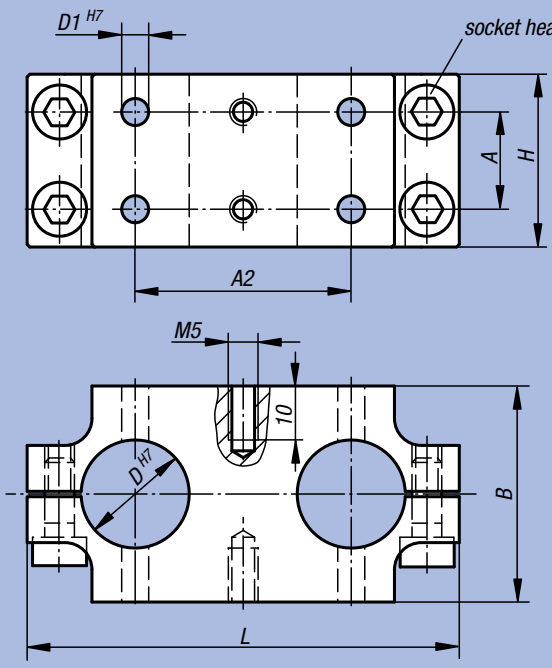

sizes 30/40

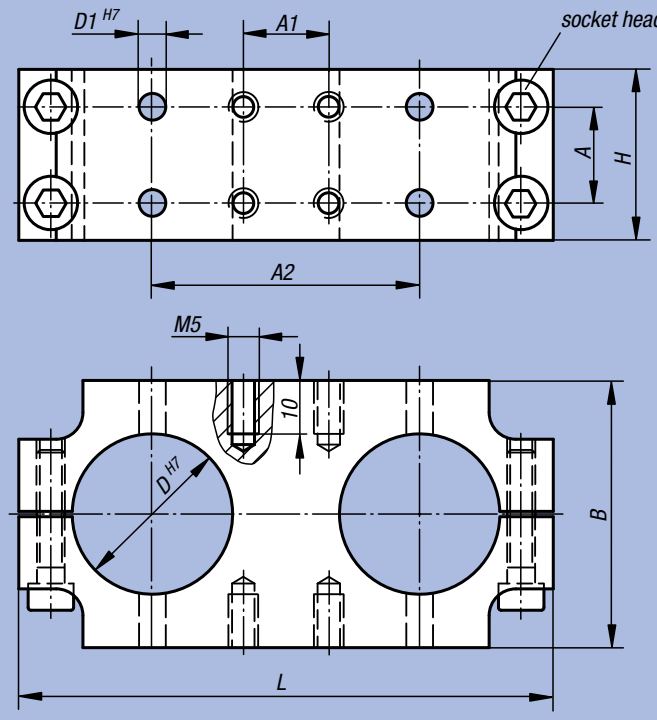

position tolerance of locating holes: ±0,01
position tolerance of holes: ±0,1

Order No.	Size	A	A1	A2	B	D	D1	H	L	kg
29207-2122	12	12	-	30	30	12	5	26	60	0,080
29207-2202	20	18	-	40	40	20	5	32	80	0,170
29207-2302	30	18	16	50	50	30	5	32	100	0,254
29207-2402	40	18	26	60	60	40	6	32	120	0,354

Adjusting Units



Material:
Aluminium EN AW-6060

Surface finish:
Black anodized

Sample order:
nlm 29210-122

Note:
Adjusting units for precise adjustment of components in the X-Y range. Assembly tolerances in the mechanical configuration can thus be compensated. Suitable for base, single, and base, double. Owing to a uniform hole pattern for the respective size, the adjusting units can be assembled beneath the base at a later time as well.

Adjusting range: X: ±3 mm
Adjusting range: Y: ±3 mm

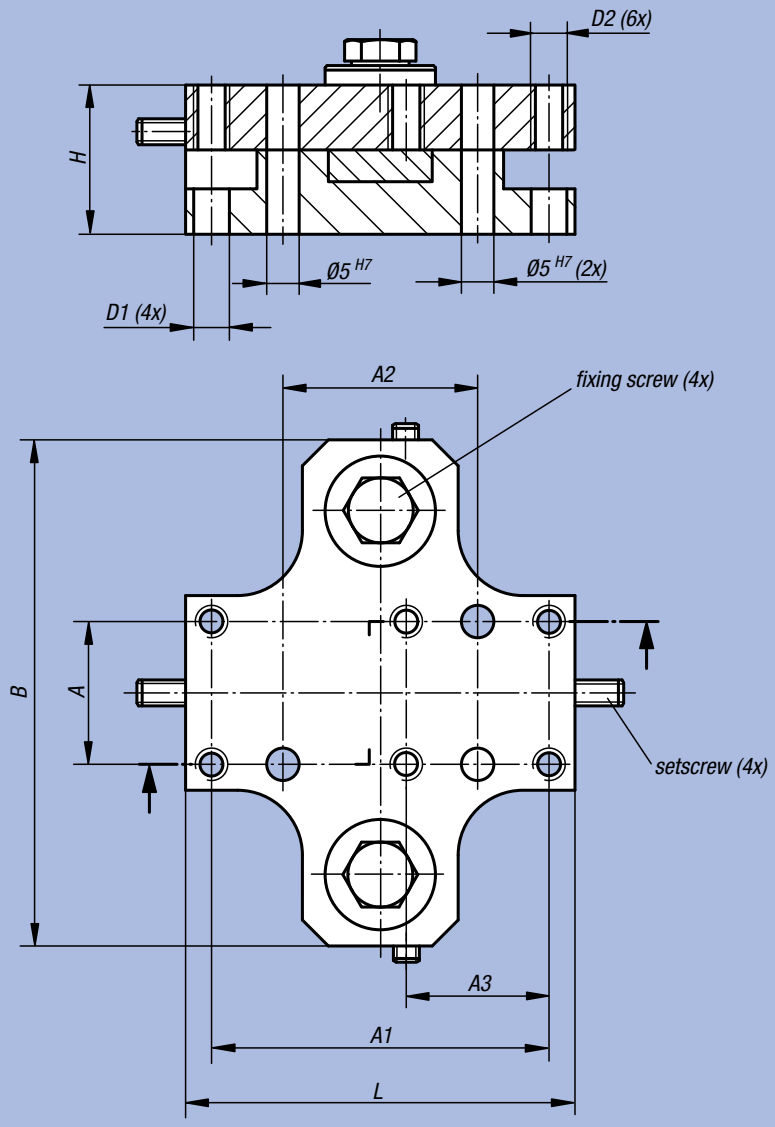

position tolerance of locating holes: ±0,01
position tolerance of holes: ±0,1

Order No.	Size	A	A1	A2	A3	B	D1	D2	H	L	kg
29210-122	12	22	52	30	22	78	5,5	M5	23	60	0,170
29210-202	20	30	70	40	30	88	5,5	M5	23	80	0,455
29210-302	30	40	90	50	40	110	6,5	M6	32	100	0,615
29210-402	40	48	108	60	48	120	8,5	M8	32	120	0,775

Adjusting Rings



Material:
Aluminium EN AW-6060

Surface finish:
Black anodized

Sample order:
nlm 29215-122

Note:
With the adjusting rings, bases and clamping bases can be installed aloft exactly and thus guarantee position-precise assembly of components.

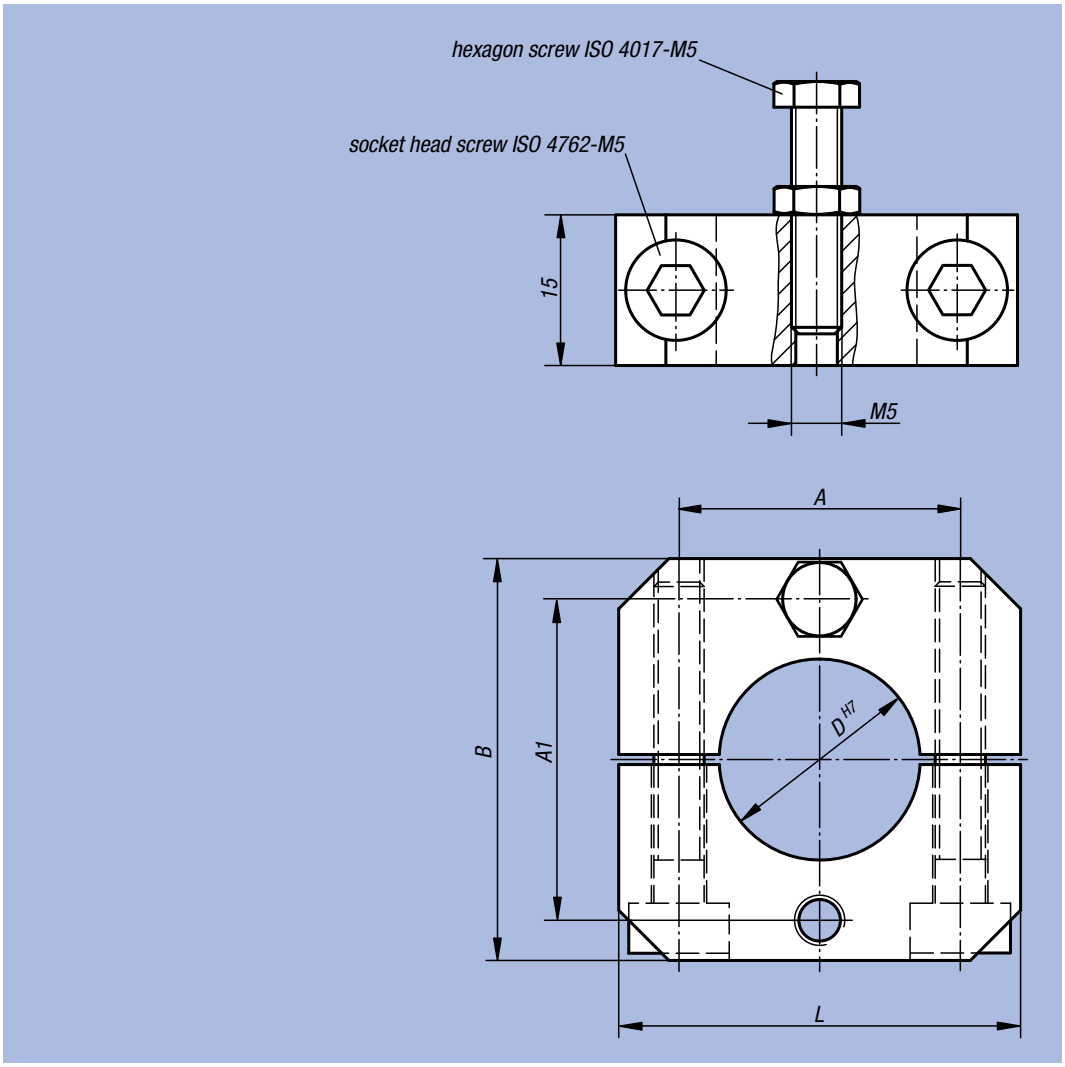

Order No.	Size	A	A1	B	D	L	kg
29215-122	12	19	22	30	12	30	0,030
29215-202	20	28	32	40	20	40	0,043
29215-302	30	38	42	50	30	50	0,065
29215-402	40	48	52	60	40	60	0,084

Columns stainless steel



Material:
Stainless steel 1.4305

Surface finish:
Natural finish, ground

Sample order:
nlm 29240-121X0100
(please also indicate dimension L)

Note:
With the ground stainless steel columns, versatile configuration variants can be configured with few standard components.

Ø12 und Ø20 = solid column.
Ø30 und Ø40 = tubular column
(wall thickness 5 mm).

On request:
Other lengths.

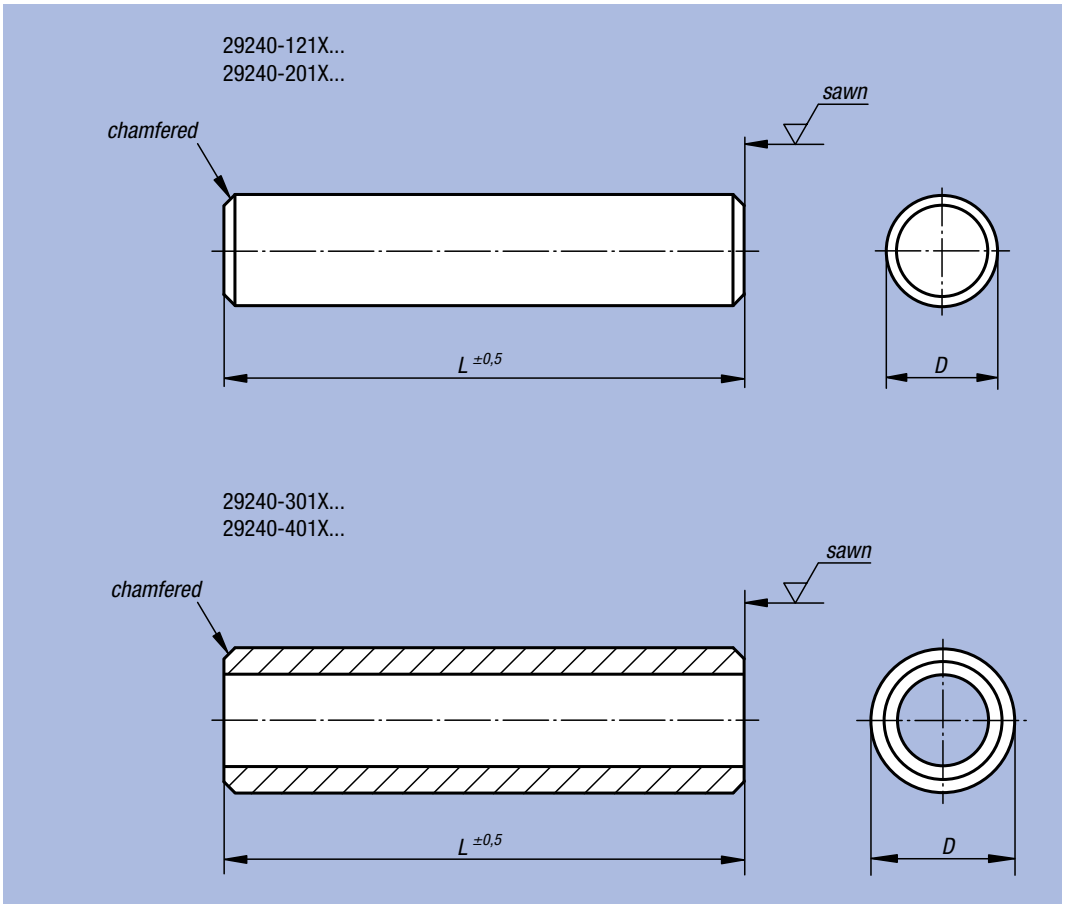

Order No.	Size	D	L	kg/m
29240-121X	12	12	100 / 200 / 300 / 400 / 500	0,887
29240-201X	20	20	100 / 200 / 300 / 400 / 500	2,460
29240-301X	30	30	100 / 200 / 300 / 400 / 500	3,080
29240-401X	40	40	100 / 200 / 300 / 400 / 500	4,320

norelem

Measuring and Testing Components

Plane-Tables
Measuring Tripod
Joints
page 1055–1062

Test Control Unit of concentricity
Universal Measuring Fixture
Dial Gauges
page 1063–1074

Standard components
for Inspection and Testing Devices
page 1075–1112

31000

Plane-Tables
Measuring Tripod
Joints



Plane-Tables



Material:
GJL 300 annealed

Sample order:
nlm 31000-03

Note:

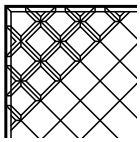

Plate surface with dust grooves on request.

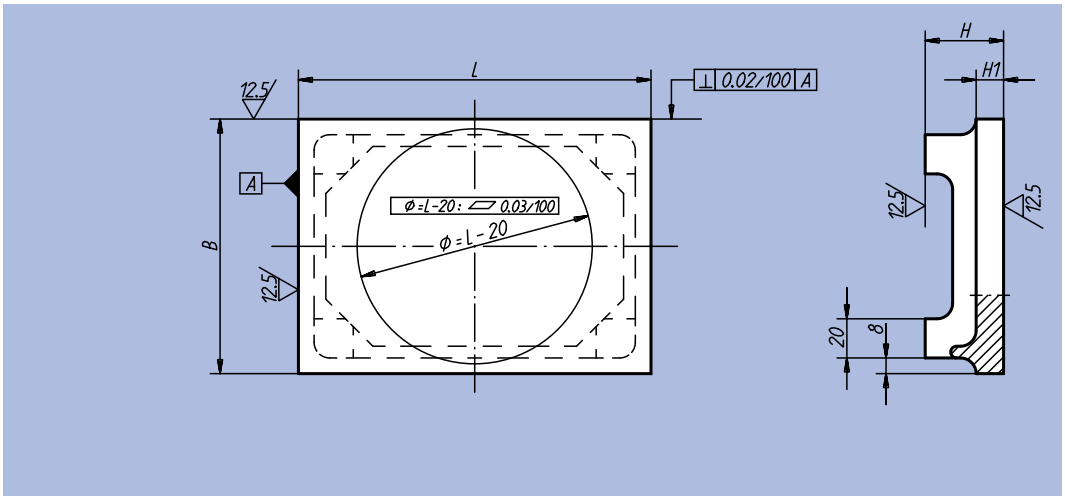

Order No.	L	B	H	H1	kg
31000-01	200	150	45	15	4,690
31000-02	250	200	45	15	7,330
31000-03	300	200	45	15	8,700
31000-04	350	250	45	15	12,000
31000-05	350	300	45	15	14,000
31000-06	400	350	60	20	26,750

Precision Plane-Table

with column

Material:
Black granite (origin rock)

Surface finish:
Plane-Table, precision class 0

Sample order:
nlm 31020-01

Note:
Original rock has major benefits over conventional granite:
- 3 times more wear resistance.
- 20% greater density.
- 3 times less heat expansion.

Suitable holders for dial gauges see 31140 and 31141.

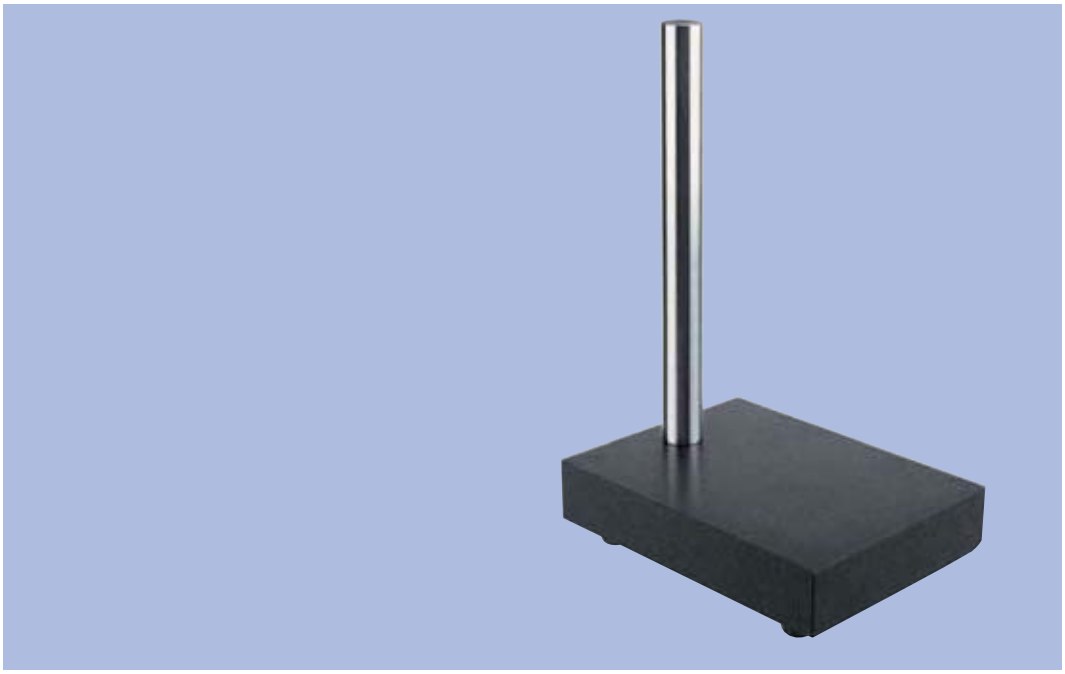

Order No.	length x width x height	Column diameter	kg
31020-01	200 x 150 x 300	25	4,500

Receiving Cylinders

for workpieces with collar

Material:
Hardened steel

Surface finish:
Ground

Sample order:
nlm 31090-111

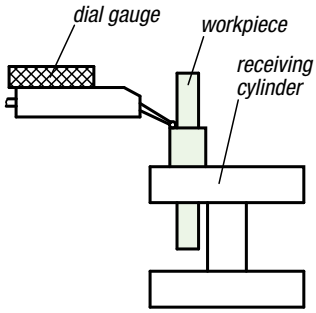

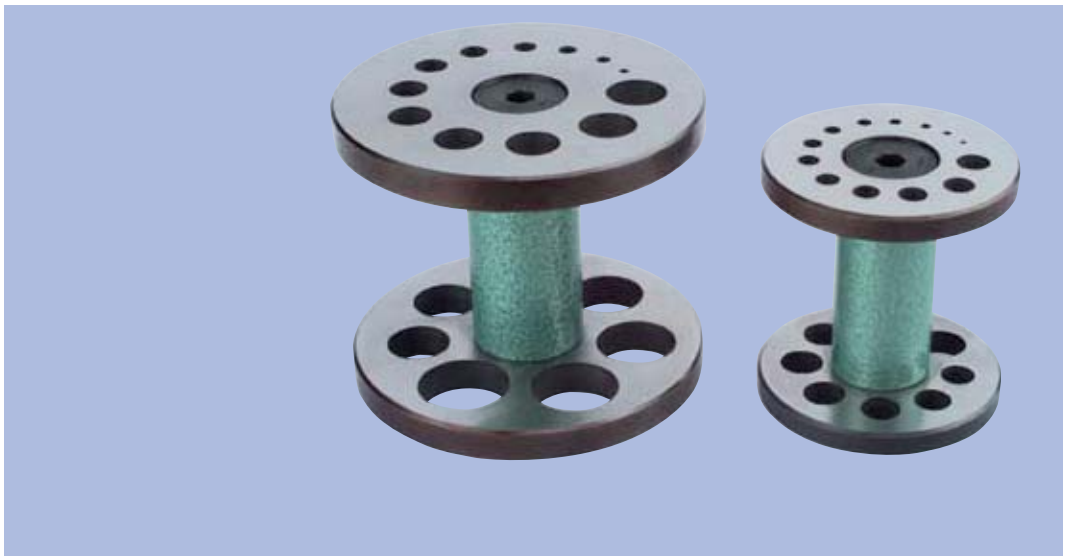

Order No.	Diameter of drill hole	Diameter increase	Number of holes	Parallelism of the bearing surfaces	Clearance between bearing surfaces	kg
31090-111	1 - 11	0,5	21	< 0,01	46	0,304
31090-220	2 - 20	1	19	< 0,01	52	0,650

Joint Tripods

with hydraulical clamping

Sample order:
nlm 31100-12

Note:
The 4-part joint rod is centrally clamped by a clamping knob. Adjusting by means of fine-adjustment.

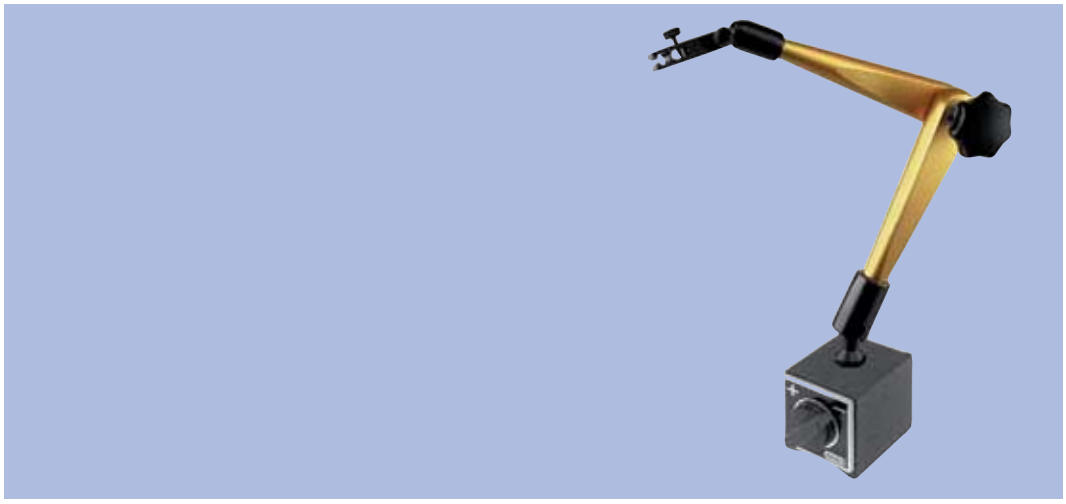

Order No.	total height	Radius of action	Magnetic foot: Length	Magnetic foot: Width	Magnetic foot: Height	Adhesive force N	kg
31100-01	310	260	61	50	55	600	1,550
31100-02	480	400	76	50	55	900	2,200

Order No.	Surface finish	Fixation thread	total height	Radius of action	kg
31100-11	without magnetic foot	M8x8	255	260	0,540
31100-12	without magnetic foot	M10x11	425	400	0,900

Magnetic Measuring Tripod

Sample order:
nlm 31102-01

Note:
Magnetic foot: 900 N adhesive force.

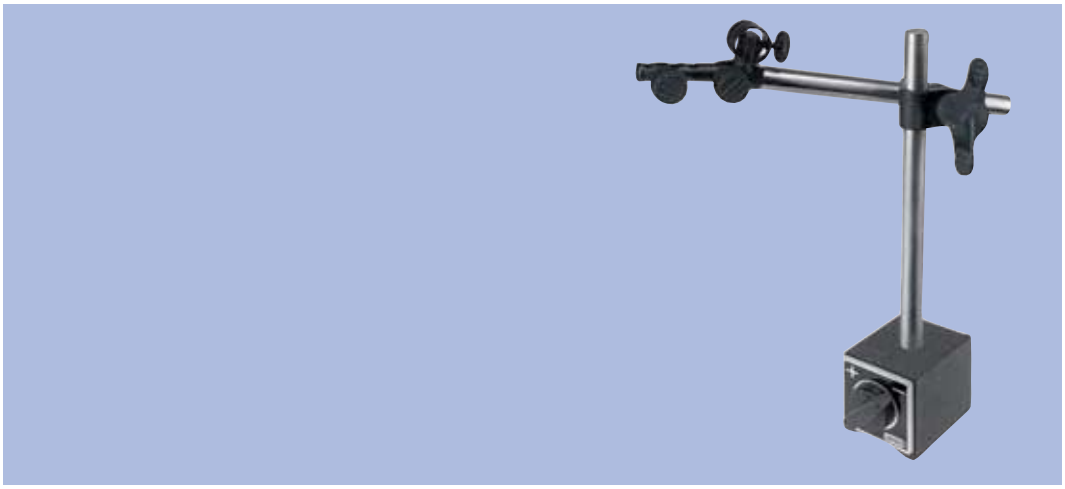

Order No.	total height	Column height	Ø column	Magnetic foot: Length	Magnetic foot: Width	Magnetic foot: Height	Fixation thread	Adhesive force N	kg
31102-01	287	232	16	76	50	55	M10	900	2,310

Magnetic Tripod

Sample order:
nlm 31120-01

Note:
Magnetic foot with On / off switch
(see also 09210-03)



Order No.	total height	Column height	Ø column	Magnetic foot: Length	Magnetic foot: Width	Magnetic foot: Height	Fixation thread	Adhesive force N	kg
31120-01	287	232	16	76	50	55	M10	900	1,770

Magnetic Tripod

Surface finish:
Magnetic foot: shielded system, surface galvanized

Sample order:
nlm 31125-01

Note:
Adhesive force 450 N. Application temperature up to 100 °C. Hairline cracks in the built-in magnetic material are unavoidable for technical reasons. They do not impair the function of the adhesive magnets in any way.
(see also 09065-10).



Order No.	total height	Column height	Ø column	Magnetic foot: Ø	Magnetic foot: Height of base	Magnetic foot: Overall height	Fixation thread	kg
31125-01	284	250	16	80	18	34	M10	0,875

Transverse Holder

Sample order:
nlm 31130-01

Note:
Adjusting by means of fine-adjustment.

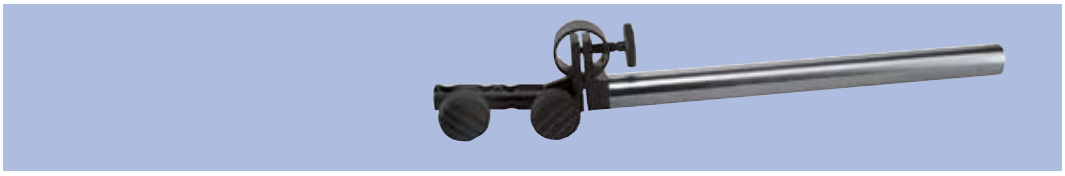

Order No.	total length	Ø of column or bar	Fixation holes, e.g. for dial gauge	kg
31130-01	270	16	3 x Ø 8	0,410

Holders of dial gauges



Material:
Aluminium

Surface finish:
Black anodized

Sample order:
nlm 31140-065

Note:
Holder for dial gauges suitable for 31020.

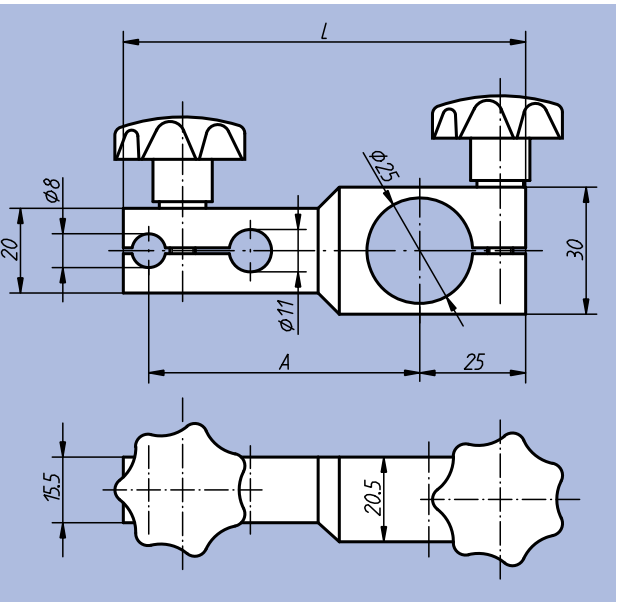

Order No.	A	L	kg
31140-065	65	95	0,140
31140-100	100	130	0,200

Holder of dial gauges

with fine-adjustment



Material:
Aluminium

Surface finish:
Black anodized

Sample order:
nlm 31141-079

Note:
Holder for dial gauges suitable for 31020.

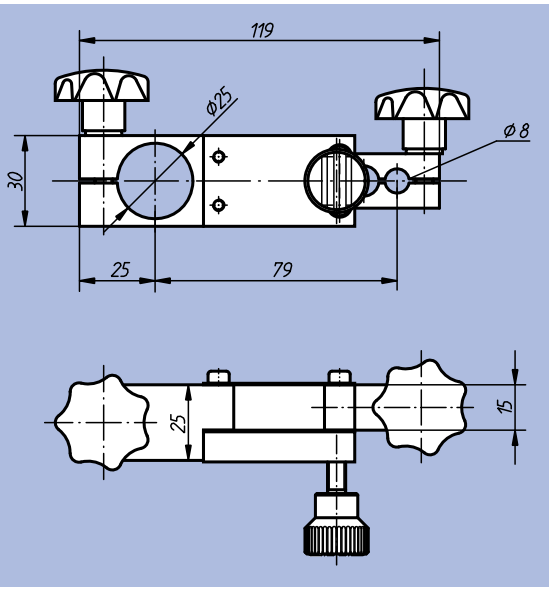

Order No.	kg
31141-079	0,180

Joint Component



Material:
Tempered steel
Surface finish:
Black oxide finish
Sample order:
nlm 31150-1220

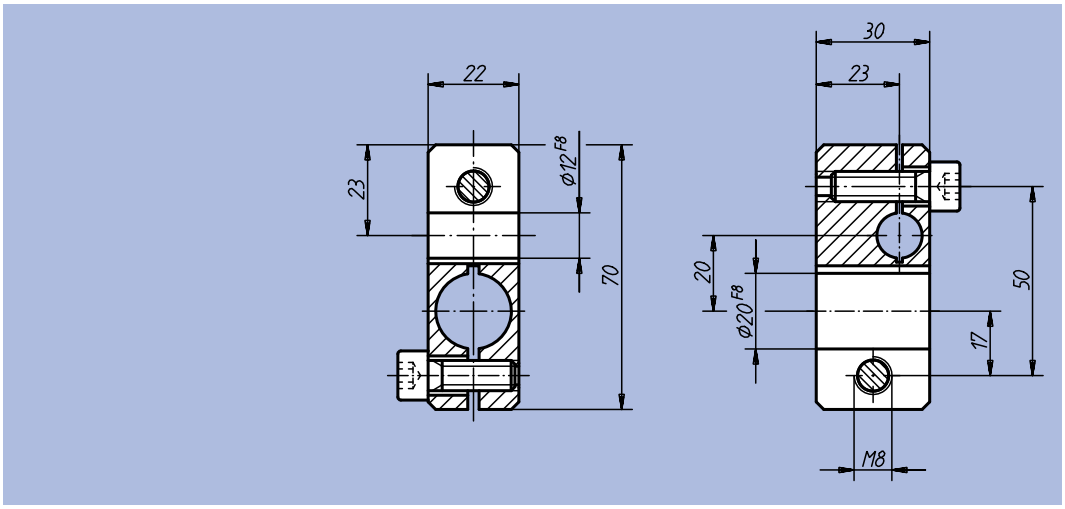

Order No.	kg
31150-1220	0,375

Joint Components



Material:
Tempered steel
Surface finish:
Black oxide finish
Sample order:
nlm 31152-0712

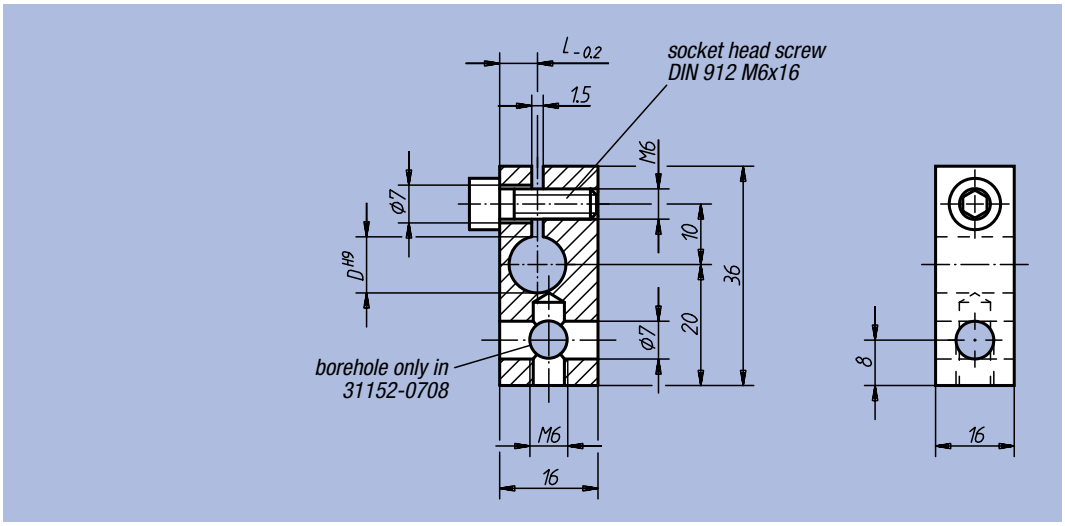

Order No.	D	L	kg
31152-0708	8	5	0,055
31152-0710	10	6	0,053
31152-0712	12	7	0,050

Joint Components



Material:
Tempered steel

Surface finish:
Black oxide finish

Sample order:
nlm 31154-1210

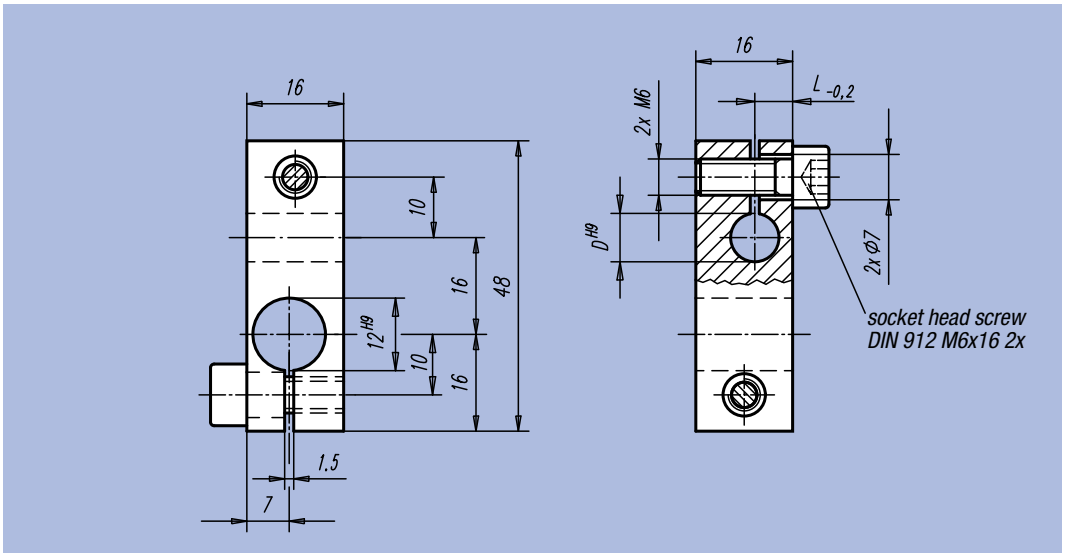

Order No.	D	L	kg
31154-1208	8	5	0,075
31154-1210	10	6	0,070
31154-1212	12	7	0,065

Clamping Joints



Material, surface finish:
Bushing and bolt in steel, high-polish chromium-plated; clamping piece in high-strength aluminium, black anodized; Wing Grip handle in anthracite grey thermoplastic

Sample order:
nlm 31156-1616

Note:
Continuously adjustable.
Rapid clamping with Wing Grip.

On request:
Different combinations of diameters D and D1.

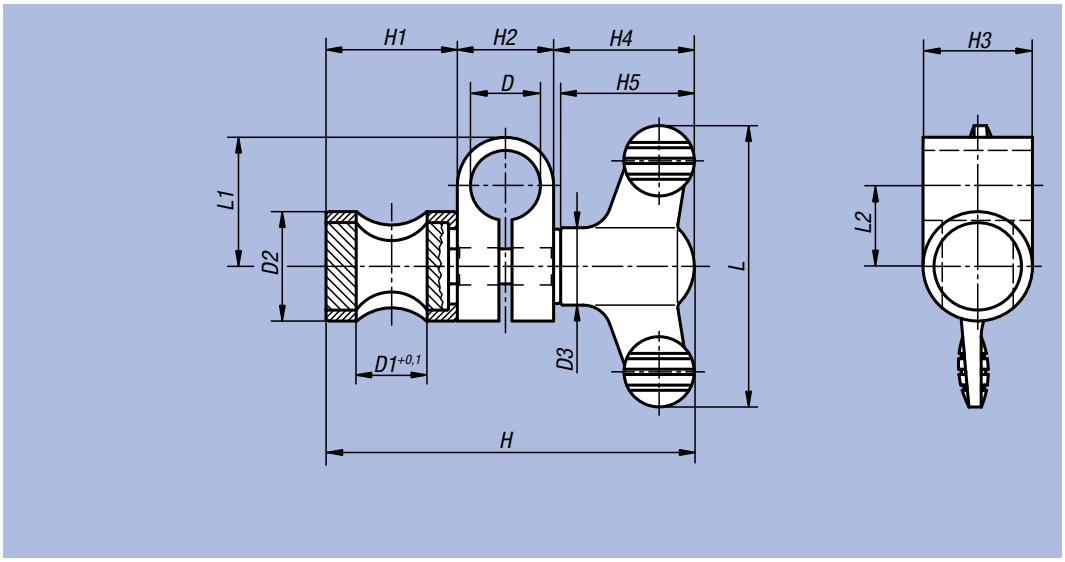

Order No.	Size	D	D1	D2	D3	H	H1	H2	H3	H4	H5	L	L1	L2	kg
31156-0606	1	6	6	14	12	43,6	15	9	14	19,6	18	38	13	8,5	0,025
31156-0808	2	8	8	16	14	54,6	17	12	16	25,6	24	50	18	12	0,039
31156-1010	3	10	10	18	14	60,6	20	15	18	25,6	24	50	22	14,5	0,055
31156-1212	4	12	12	20	21	77,2	23	17	20	37,2	35,6	75	24	15,5	0,091
31156-1616	5	16	16	25	21	90,2	31	22	25	37,2	35,6	75	29,5	18,5	0,144
31156-2020	6	20	20	30	21	98,2	36	25	30	37,2	35,6	75	30	17,5	0,209

32500

Test Control Unit of concentricity
Universal Measuring Fixture
Dial Gauges



32500

Shape and position tolerances

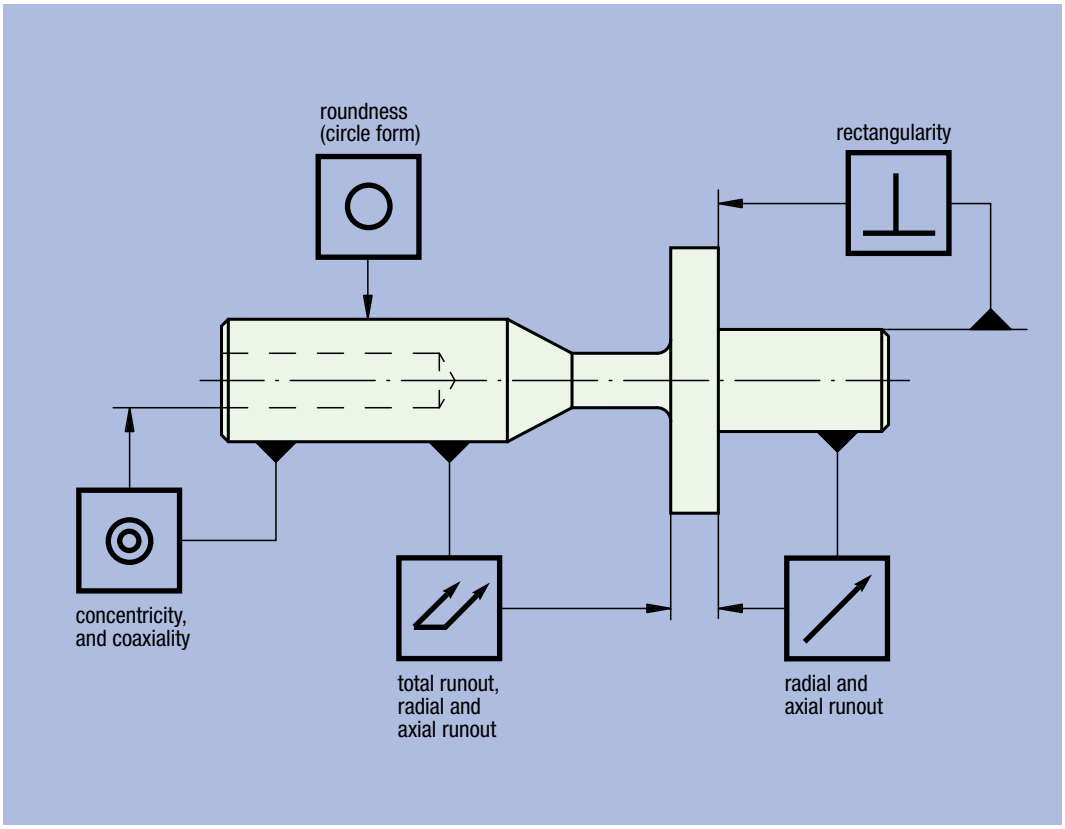

Mounting information for test control units of concentricity

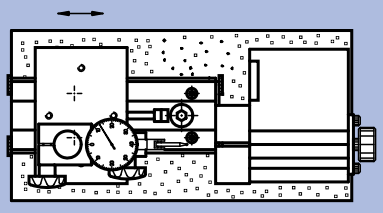

testing of an internal diameter

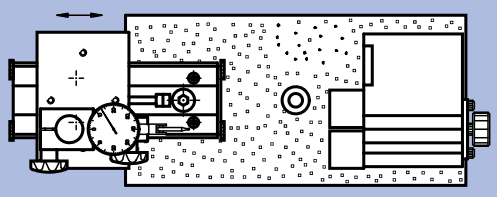

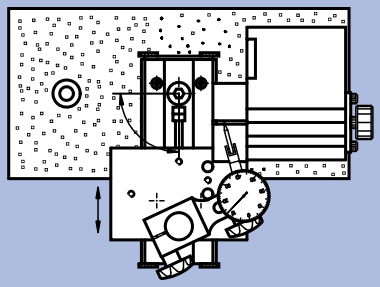

The slide can be variable turned by 90° thus allows rapid departing and positioning for changing parts

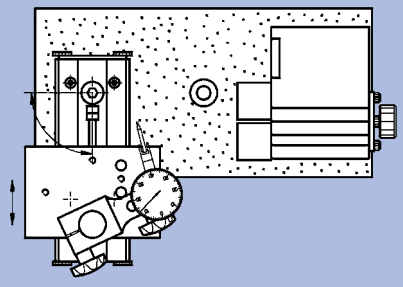

The adjustment of the slide is possible by means of a screw. The two positioning holes allow an extended working area.

Testing possibilities

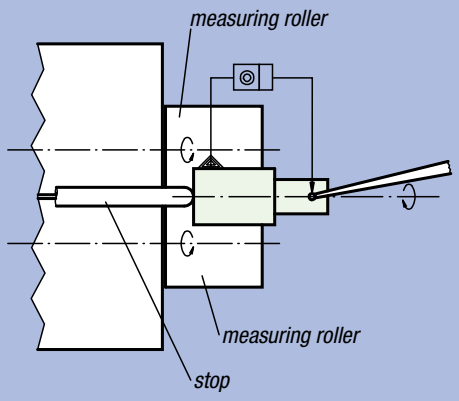

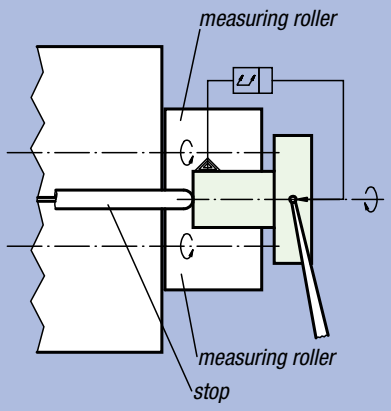

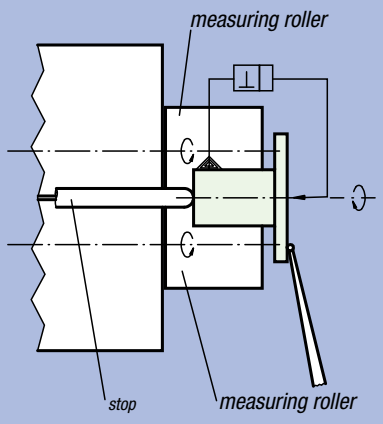

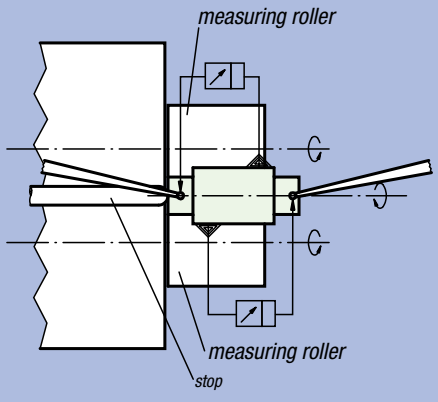

Test Control Unit of concentricity

Ø max. 35 mm

Sample order:
nlm 32501-01

Note:
Test control unit suitable for measurements of concentricity, impact and rectangles.
Its robust design means the test control unit can be used in the workshop and in the precision measurement room. The part to be measured is easily put in position thanks to the rising contact roller.
The dial gauges can be placed anywhere via the easily accessible slots.
Clamping is achieved by magnet.

Technical data:
Testing range from Ø 5 mm to Ø 35 mm
Min. measuring roller gap: 29 mm.
Max. travel of slot: 100 mm.
Pressure of the contact roller is adjustable.
Measuring roller rotates by means of a geared drive.

Precision of the rollers:
parallelism and coaxialism of both measuring rollers max. 2 µm.

Base plate in granite:
300 mm x 130 mm x 25 mm

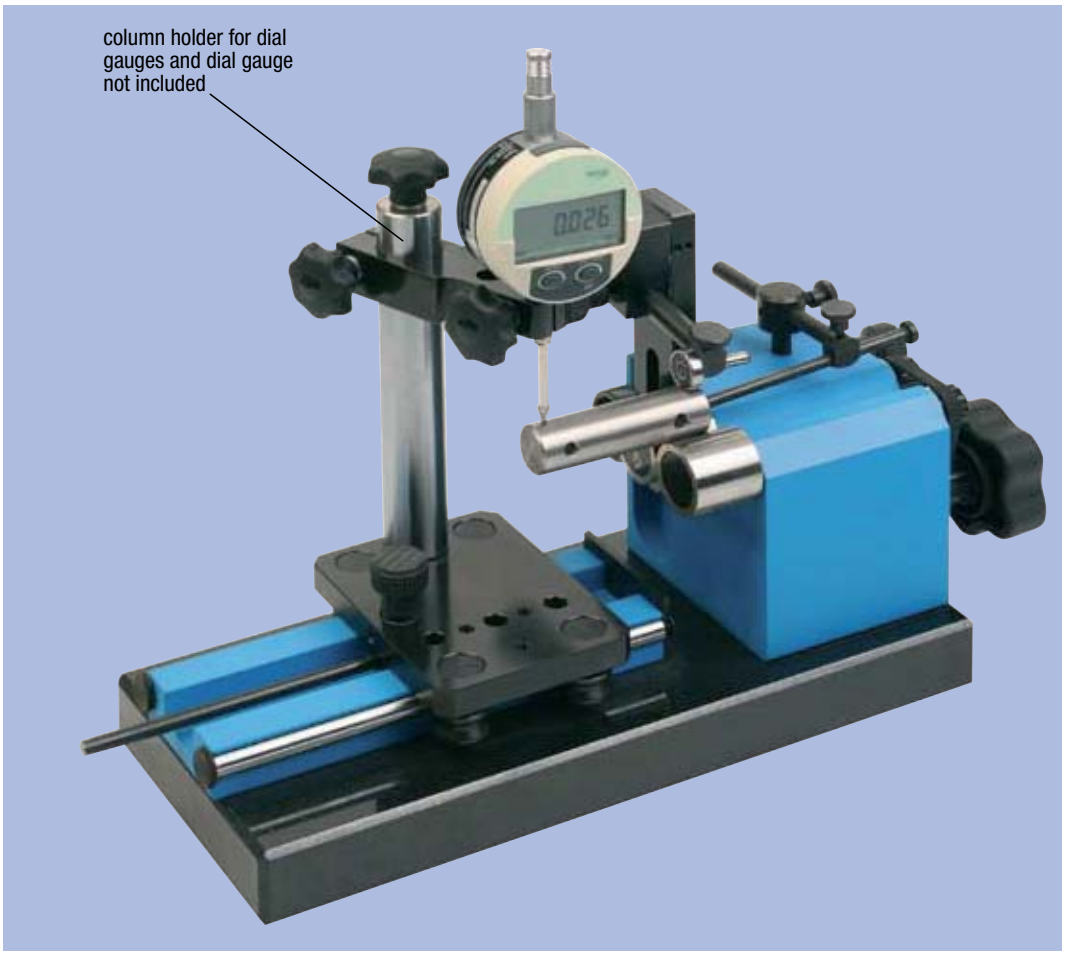

Order No.	kg
32501-01	7,600

Accessories

for test control unit of concentricity, Ø max. 35 mm



Order No.	Product	kg
32501-02	Supplementary slide	0,800
32501-03	Column holder for dial gauges	1,500
32501-04	Holder for dial gauges with hydraulical clamping	0,900
32513-90	Adjustable V-block as counter bearing for long parts	0,300
32501-05	Teflon contact pin for measurement ranges smaller than Ø 5 mm	0,050

Adjustable Test Control Unit of concentricity

Ø max. 80 mm

Sample order:
nlm 32506-01

Note:
Test control unit suitable for measurements of concentricity, impact and rectangles.
Its robust design means the test control unit can be used in the workshop and in the precision measurement room. The part to be measured is easily put in position thanks to the rising contact roller.
The dial gauges can be placed anywhere via the easily accessible slots.
Clamping is achieved by magnet.

Technical data:
Testing range from Ø 5 mm to Ø 35 mm.
Min. measuring roller gap: 29 mm, max. 89 mm.
Max. travel of slot: 100 mm.
Pressure of the contact roller is adjustable.
Measuring roller rotates by means of a geared drive.

Precision of the rollers: parallelism and coaxialism of both measuring rollers max. 2 µm.

Base plate in granite: 300 mm x 130 mm x 25 mm.

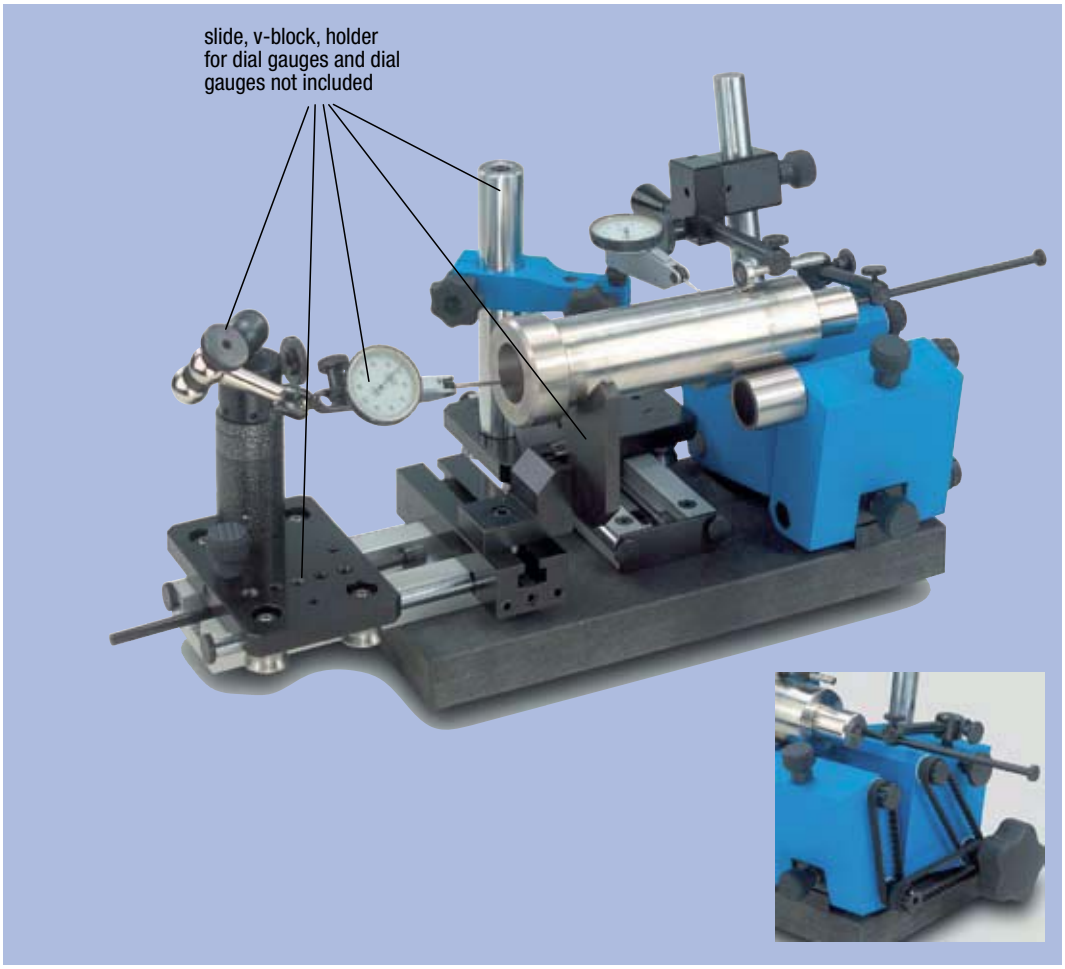

Order No.	kg
32506-01	9,000

Accessories

for test control unit of concentricity, Ø max. 80 mm



Order No.	Artikel	kg
32501-02	Supplementary slide	0,800
32501-03	Column holder for dial gauges	1,500
32501-04	Holder for dial gauges with hydraulical clamping	0,900
32513-98	Adjustable V-block as counter bearing for long parts	1,180
32501-05	Teflon contact pin for measurement ranges smaller than Ø 5 mm	0,050

Positions of measuring rollers

Note:
The measuring range can be extended to Ø 80 mm by the use of measuring rollers for free positioning.
The teflon contact pin extends the measuring range for parts above Ø 0.5 mm.

teflon contact pin
instead contact roller

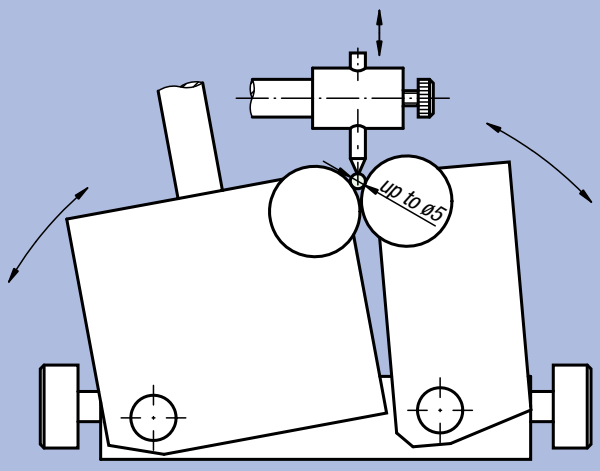

measuring rollers in closed position

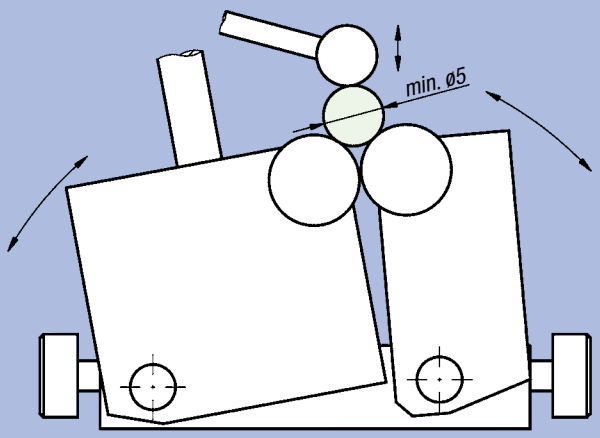

measuring rollers in opened position

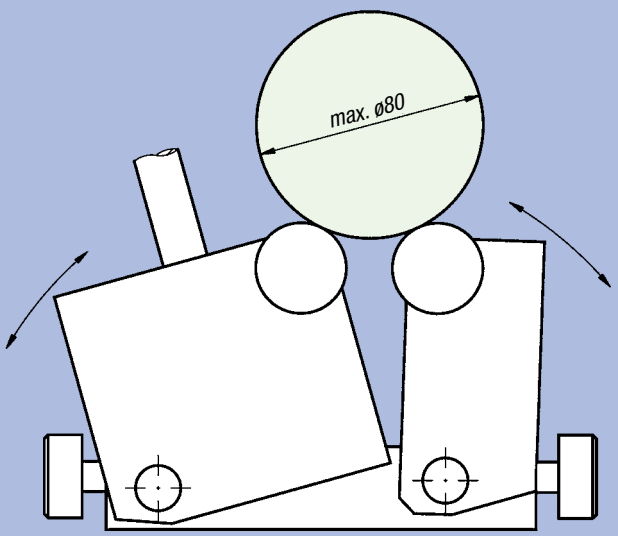

Applications

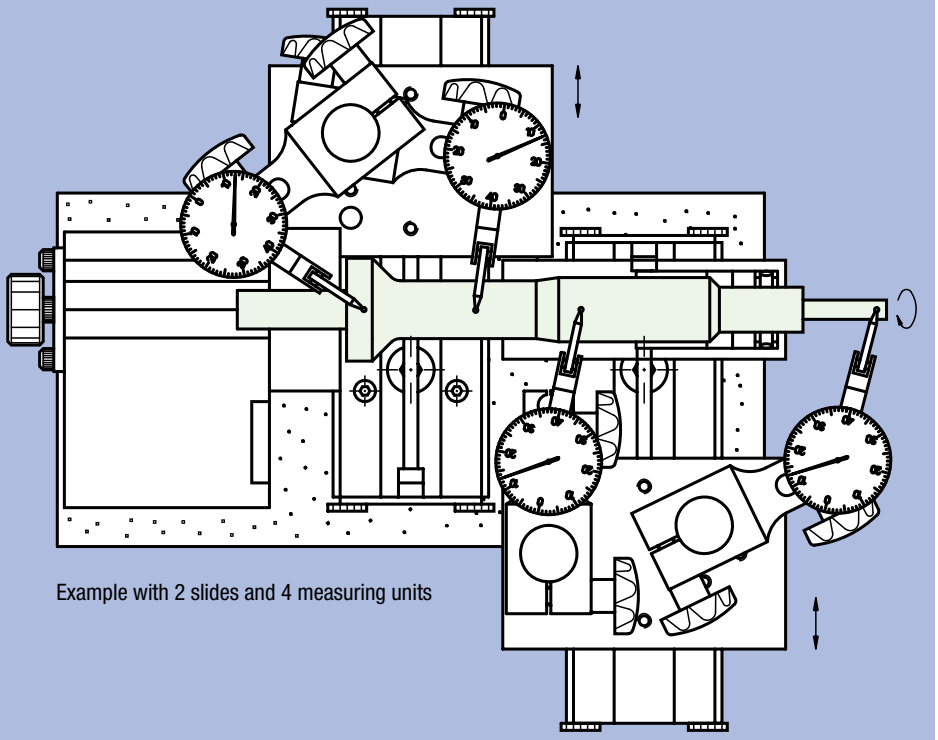

Example with 2 slides and 4 measuring units

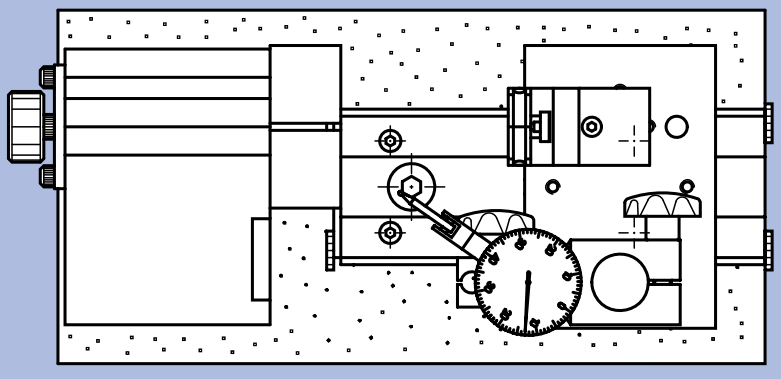

Example with v-block as counter bearing for long parts

Dial Gauge

DIN 878

Material, surface finish:
Robust metal housing,
chromium-plated

Sample order:
nlm 32540-01

Note:
Standardised clamping shank Ø 8h6,
measuring clamp 10 mm,
scale division 0.01 mm,
spindle travel 1 mm per revolution of the large pointer
housing-Ø 58 mm,
rotation counter,
tolerance marks,
supplied in a wooden case.



Order No.	Surface finish	kg
32540-01	dial gauge	0,196
32540-012	dial gauge with calibration certificate	0,196

Notes:

Digital Dial Gauges

Material, surface finish:
Housing in aluminium;
measuring spindle in stainless steel, hardened and ground

Sample order:
nlm 32542-04

Note:
Pivotable display 270°.
Standardised clamping shaft Ø 8h6.
Exchangeable stylus tip
thread M2.5
protection class IP52

Functions:
– reversable measure mm/inch
– PRESET

Disconnectible elektronic;
LCD display 6-place;
extra high figures;
height of figures 8,5 mm;
max. transverse speed 1,5 m/s;
interface Opto RS232C;
battery service life approx. 2000 hours;
battery (type CR2032) included.

Accessory:
Spare battery, type CR2032.
Order No. 32510-20.

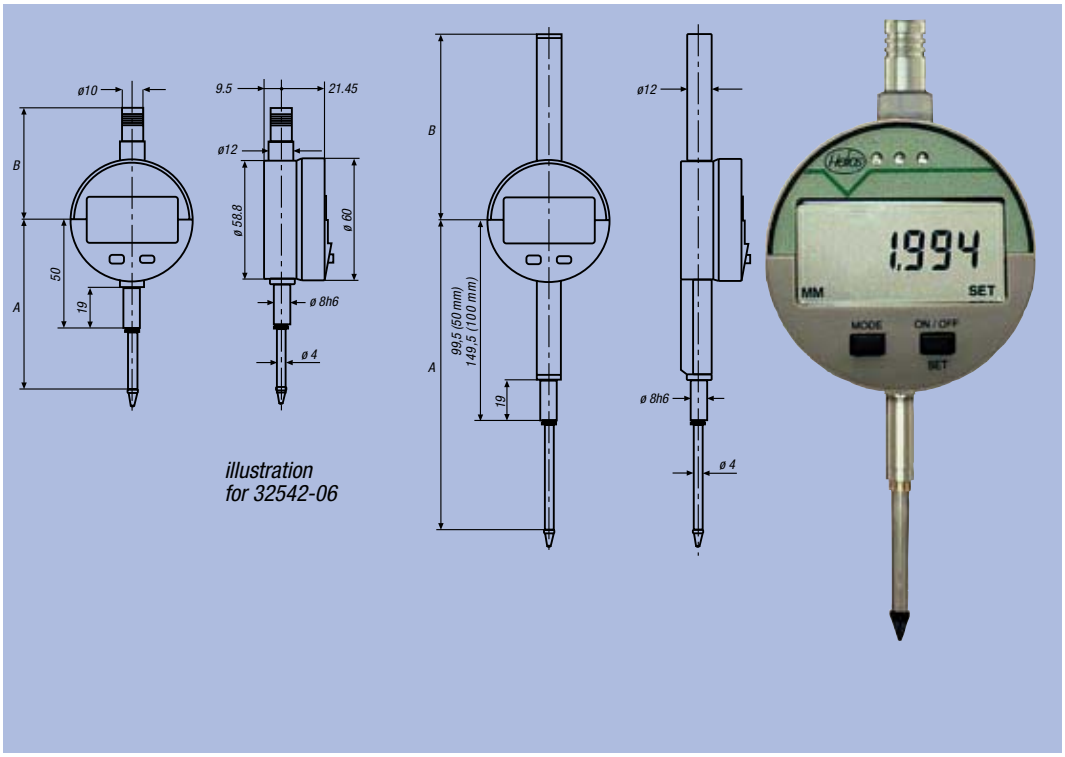

Order No.	Surface finish	Surface finish	Measuring clamp mm	Resolution mm	Precision mm	Reproducibility in µm	Measuring pressure in N	Structural dimensions A / B
32542-01	dial gauge	PRESET	25	0,001	0,005	2 (±2s)	0,6 - 1,10	78,4 / 53,4
32542-02	dial gauge	PRESET	25	0,01	0,010	2 (±2s)	0,6 - 1,10	78,4 / 53,4
32542-03	dial gauge	PRESET	12,5	0,001	0,005	2 (±2s)	0,7 - 0,95	65,9 / 53,4
32542-04	dial gauge	PRESET	12,5	0,01	0,010	2 (±2s)	0,7 - 0,95	65,9 / 53,4
32542-06	dial gauge	PRESET	50	0,01	0,020	2 (±2s)	2,0 - 3,00	150,5 / 90,5
32542-012	dial gauge with calibration certificate	PRESET	25	0,001	0,005	2 (±2s)	0,6 - 1,10	78,4 / 53,4
32542-022	dial gauge with calibration certificate	PRESET	25	0,01	0,010	2 (±2s)	0,6 - 1,10	78,4 / 53,4
32542-032	dial gauge with calibration certificate	PRESET	12,5	0,001	0,005	2 (±2s)	0,7 - 0,95	65,9 / 53,4
32542-042	dial gauge with calibration certificate	PRESET	12,5	0,01	0,010	2 (±2s)	0,7 - 0,95	65,9 / 53,4
32542-062	dial gauge with calibration certificate	PRESET	50	0,01	0,020	2 (±2s)	2,0 - 3,00	150,5 / 90,5

Notes:

33000

Standard components for Inspection and Testing Devices



Screw Connection for dial gauges

with clamping shaft Ø 8



Material:
Tempered steel

Surface finish:
Black oxide finish,
collet chuck heat-treated

Sample order:
nlm 33000-08

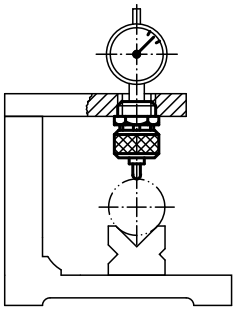

Screw Connection for dial gauges with clamping shaft ø 8 33000-08

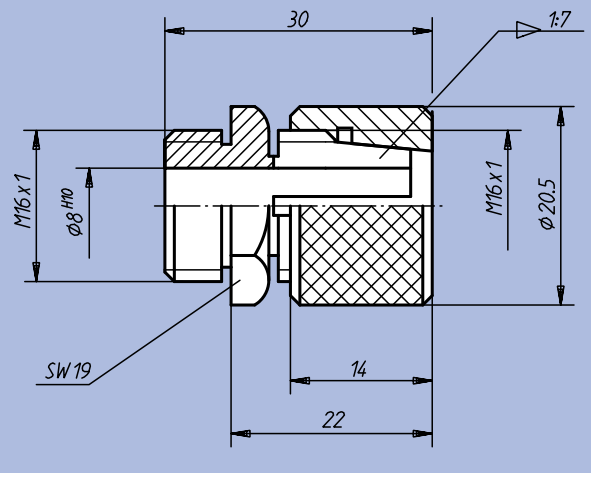

Order No.	kg
33000-08	0,042

Notes:

Sliding Holder of dial gauges



Material:
Tempered steel

Surface finish:
Black oxide finish, collet chuck and body heat-treated

Sample order:
nlm 33010-08025

Note:
Dial gauge and probe are not included.
Dial Gauges see 32540 and 32542.
Probes see 33020 up to 33026.

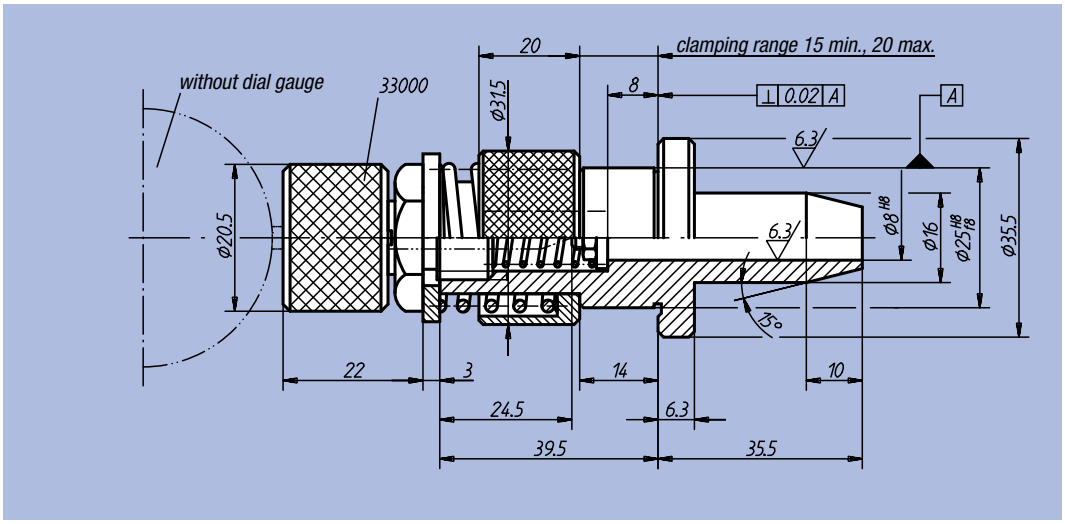

Order No.	Supplied for the tracer pin	kg
33010-08025	1 washer 5,3 x 14 x 1 1 hexagon nut M5 1 compression spring	0,240

Holder of dial gauges

short version with thread



Material:
Tempered steel

Surface finish:
Black oxide finish, collet chuck and body heat-treated

Sample order:
nlm 33012-08050

Note:
Dial gauge and probe are not included.
Dial Gauges see 32540 and 32542.
Probes see 33020 up to 33026.

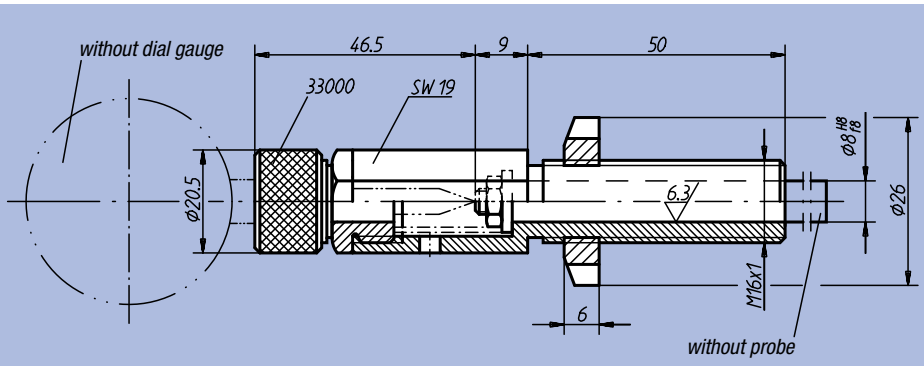

Order No.	Supplied for the tracer pin	kg
33012-08050	1 washer 5,3 x 14 x 1 1 hexagon nut M5 1 compression spring	0,140

Holders of dial gauges

long version with thread



Material:
Tempered steel

Surface finish:
Black oxide finish, collet chuck and body heat-treated

Sample order:
nlm 33014-08125

Note:
Dial gauges and probes are not included.
Dial Gauges see 32540 and 32542.
Probes see 33020 up to 33026.

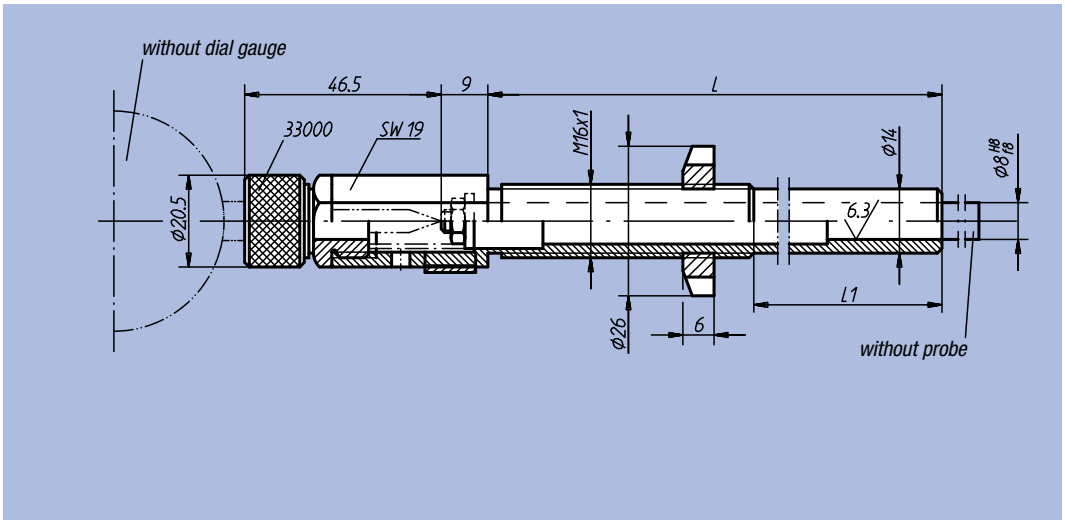

Order No.	L	L1	Supplied for the tracer pin	kg
33014-08125	125	75	1 washer 5,3 x 14 x 1 1 hexagon nut M5 1 compression spring	0,175
33014-08180	180	130		0,185

Holder of dial gauges

short version with smooth shaft



Material:
Tempered steel

Surface finish:
Black oxide finish, collet chuck and body heat-treated

Sample order:
nlm 33016-08050

Note:
Dial gauge and probe are not included.
Dial Gauges see 32540 and 32542.
Probes see 33020 up to 33026.

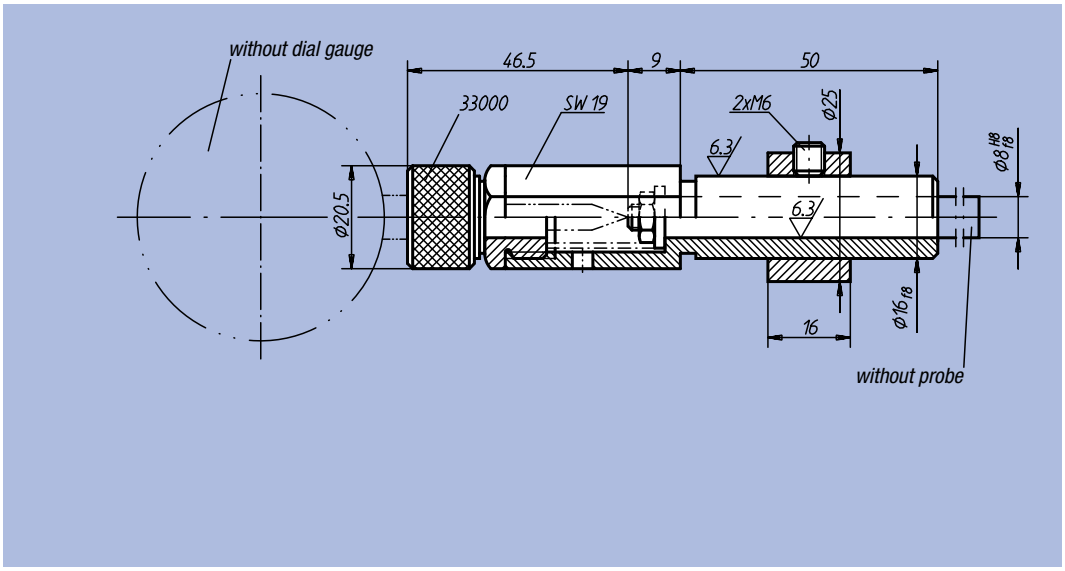

Order No.	Supplied for the tracer pin	kg
33016-08050	1 washer 5,3 x 14 x 1 1 hexagon nut M5 1 compression spring	0,170

Holder of dial gauges

for measuring yoke



Material:
Tempered steel

Surface finish:
Black oxide finish, collet chuck and body heat-treated

Sample order:
nlm 33018-06053

Note:
Dial gauges and probes are not included.
Dial Gauges see 32540 and 32542.
Probes see 33028 up to 33032.

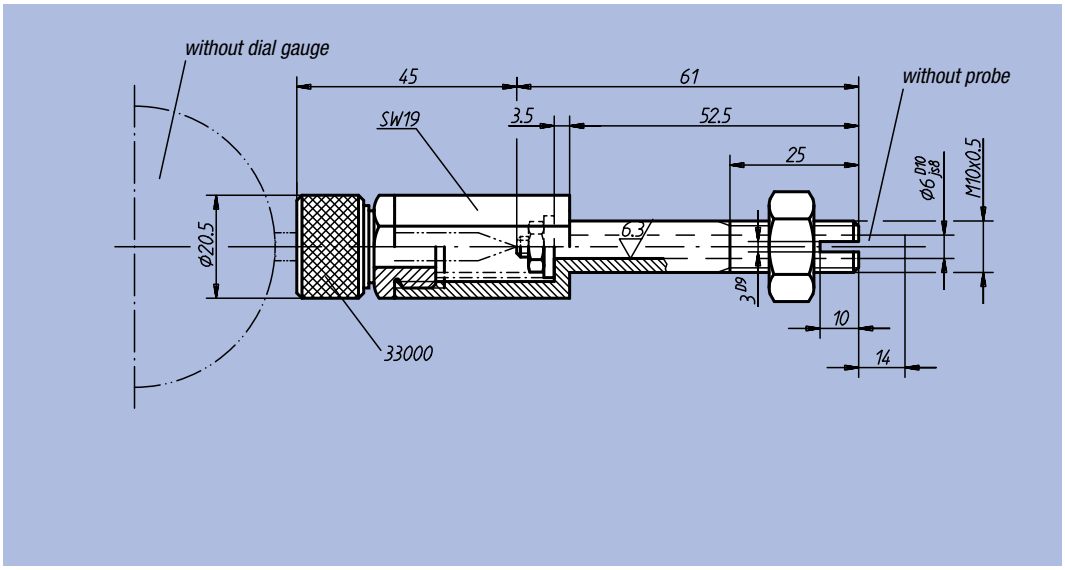

Order No.	Supplied for the tracer pin	kg
33018-06053	1 washer 4,3 x 14 x 0,9 1 hexagon nut M4 1 compression spring	0,095

Application: holder of dial gauges

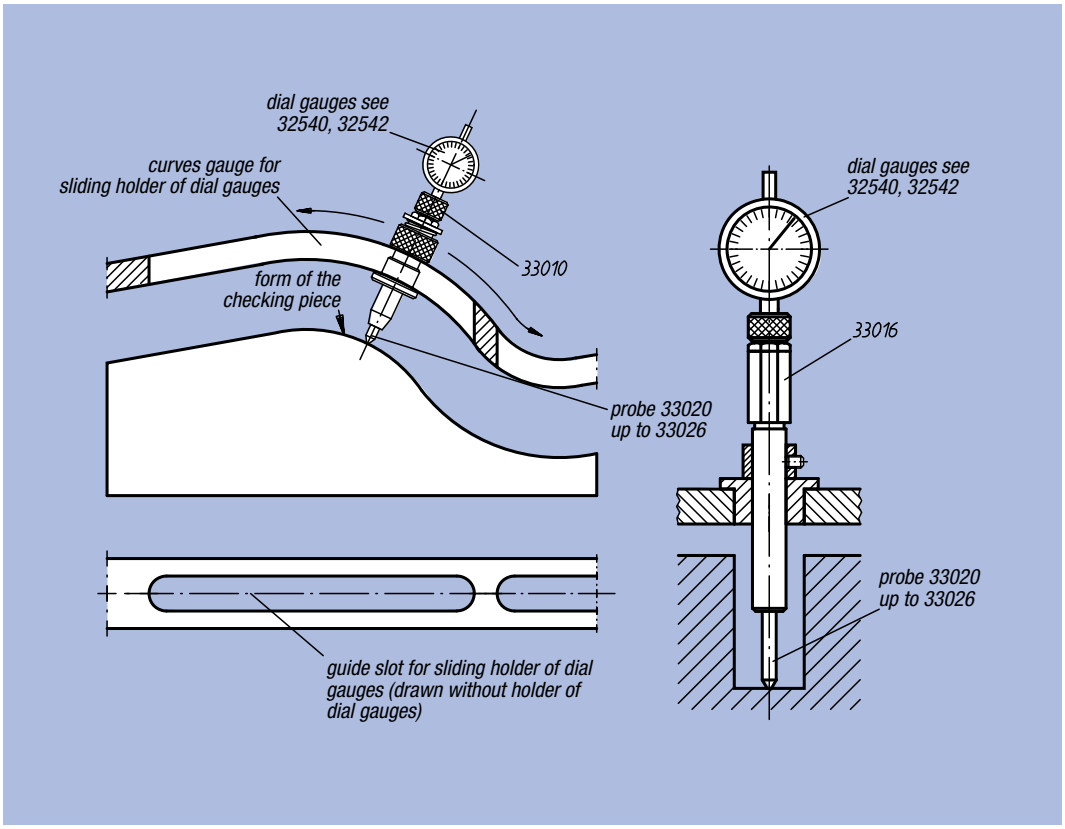

Probe

with face surface



Material:
Steel

Surface finish:
Black oxide finish

Sample order:
nlm 33020-08100

Note:
These probes are suitable for Holders of dial gauges 33010 up to 33016.

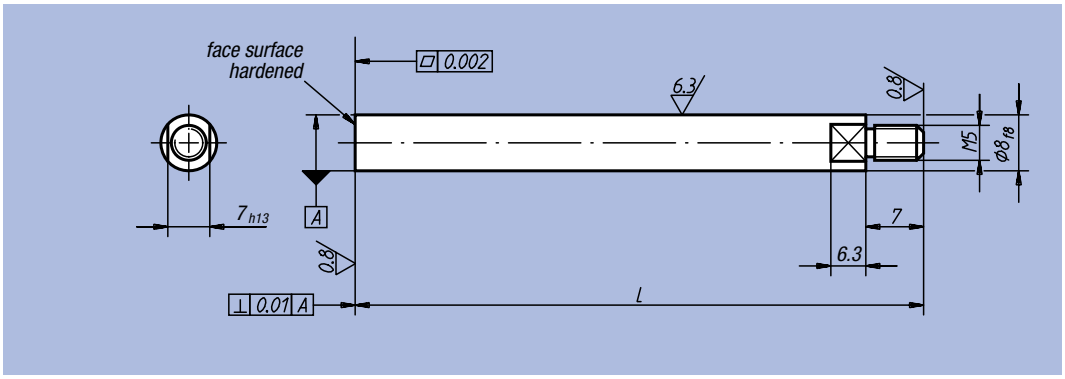

Order No.	L	g
33020-08063	63	25
33020-08080	80	30
33020-08100	100	40
33020-08160	160	60
33020-08250	250	145

Probe

with flat point



Material:
Steel

Surface finish:
Black oxide finish

Sample order:
nlm 33022-08063

Note:
These probes are suitable for Holders of dial gauges 33010 up to 33016.

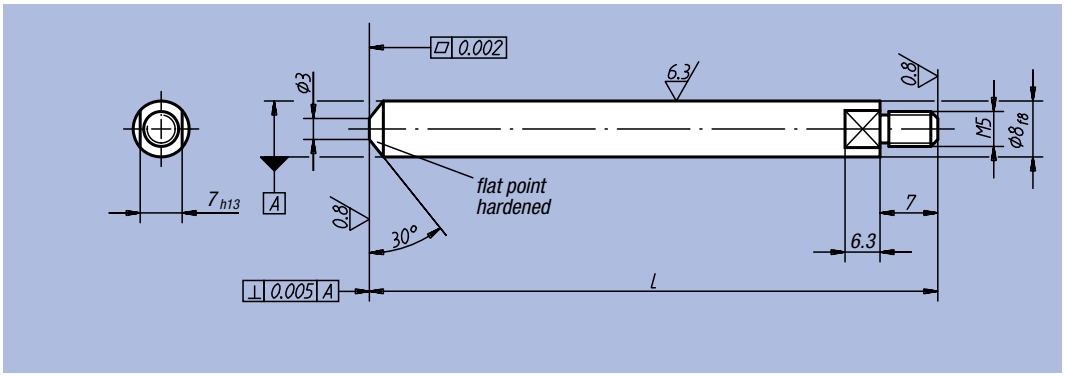

Order No.	L	g
33022-08063	63	25
33022-08080	80	30
33022-08100	100	40

Probe

with reduced face surface



Material:
Steel

Surface finish:
Black oxide finish

Sample order:
nlm 33024-08160

Note:
These probes are suitable for Holders of dial gauges 33010 up to 33016.

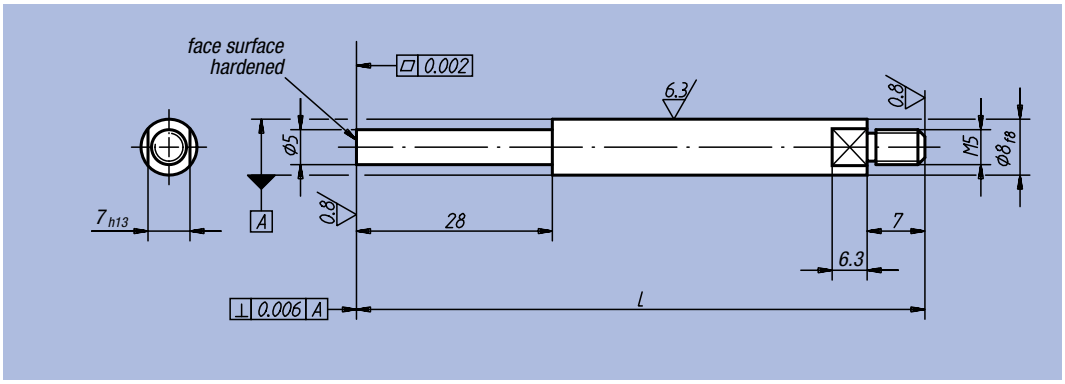

Order No.	L	g
33024-08080	80	25
33024-08100	100	30
33024-08160	160	55
33024-08250	250	90

Probe

with reduced oval point



Material:
Steel

Surface finish:
Black oxide finish

Sample order:
nlm 33026-08080

Note:
These probes are suitable for Holders of dial gauges 33010 up to 33016.

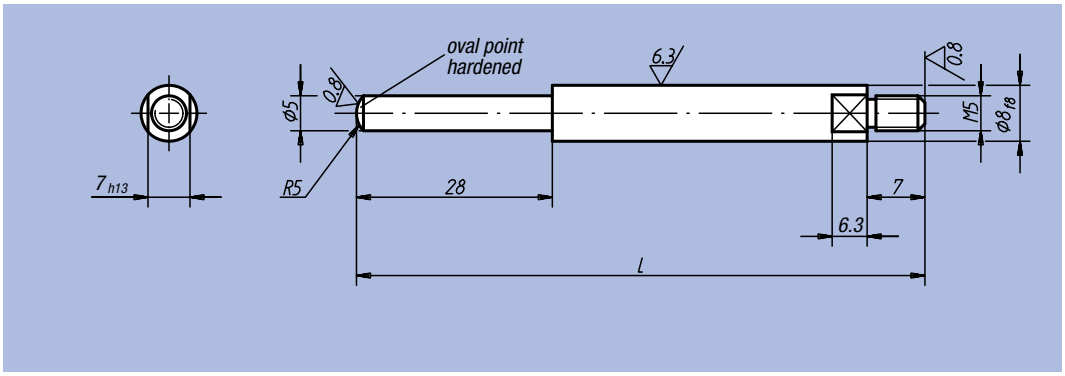

Order No.	L	g
33026-08080	80	25
33026-08100	100	30
33026-08160	160	55

Flat Probe



Material:
Tool steel;
support surface in hard metal

Surface finish:
Black oxide finish

Sample order:
nlm 33028-06075

Note:
This probe is suitable for
Holder of dial gauges 33018.

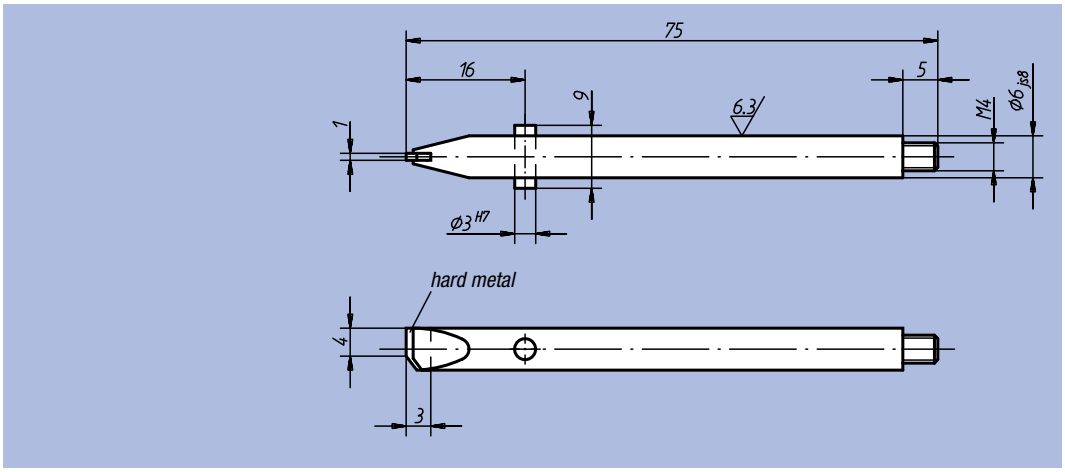

Order No.	g
33028-06075	16

Flat Stepped Probe



Material:
Tool steel;
support surface in hard metal

Surface finish:
Black oxide finish

Sample order:
nlm 33029-06075

Note:
This probe is suitable for
Holder of dial gauges 33018.

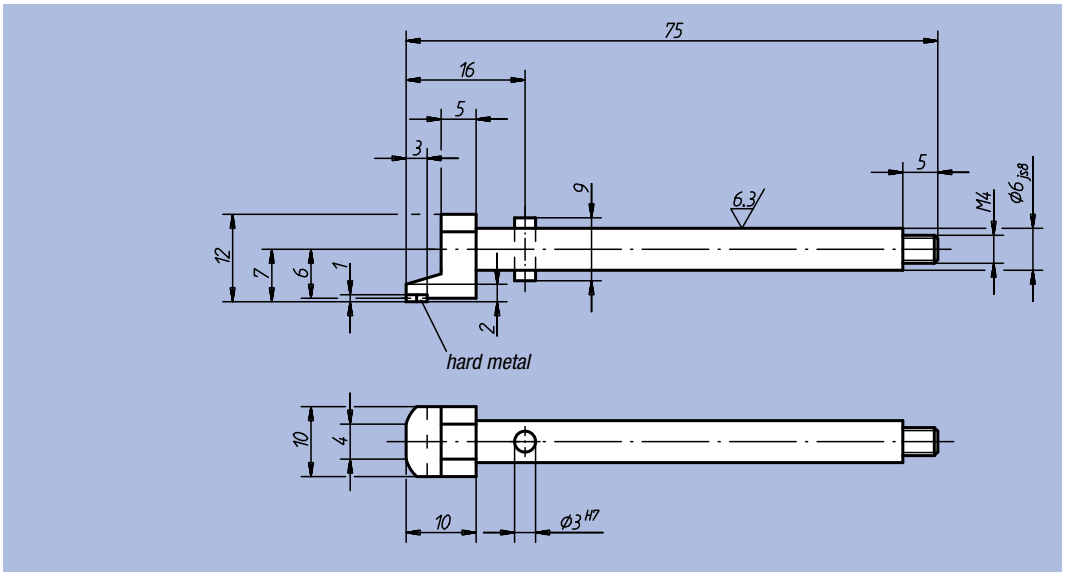

Order No.	g
33029-06075	19

Probe

with reduced face surface



Material:
Tool steel. Face surface: insert in hard metal

Surface finish:
Black oxide finish

Sample order:
nlm 33030-06075

Note:
This probe is suitable for Holder of dial gauges 33018.

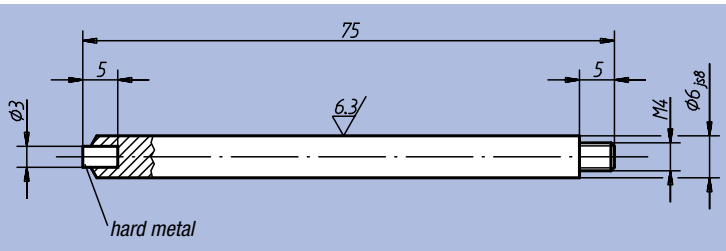

example for mounting:

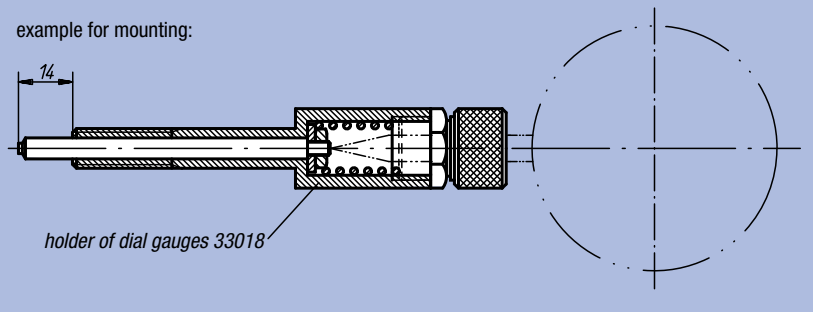

Order No.	g
33030-06075	16

Extension

for measuring inserts



Material:
Tool steel

Surface finish:
Black oxide finish

Sample order:
nlm 33032-06067

Note:
This extension is suitable for Holder of dial gauges 33018. Measuring Inserts see 33040 up to 33052.

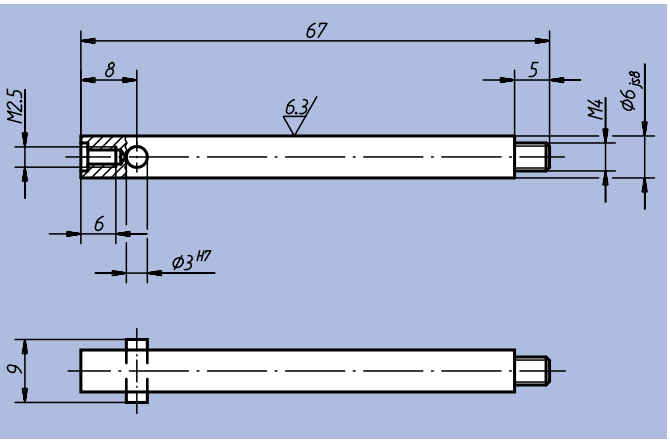

Order No.	g
33032-06067	14

Flat Probe for fixed stop



Material:
Tool steel;
support surface in hard metal

Surface finish:
Black oxide finish

Sample order:
nlm 33034-06050

Note:
This probe is suitable for
Oscillating Measuring Yoke 33160.

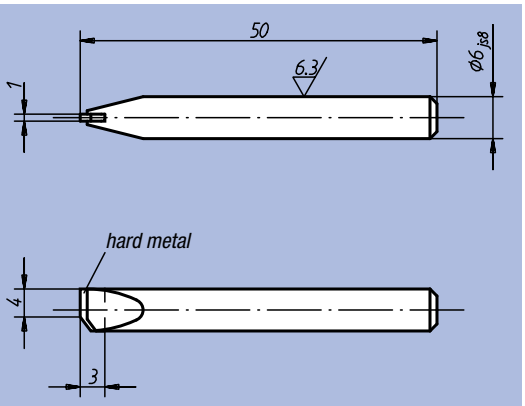

Order No.	g
33034-06050	11

Flat Stepped Probe

for fixed stop



Material:
Tool steel;
support surface in hard metal

Surface finish:
Black oxide finish

Sample order:
nlm 33035-06050

Note:
This probe is suitable for
Oscillating Measuring Yoke 33160.

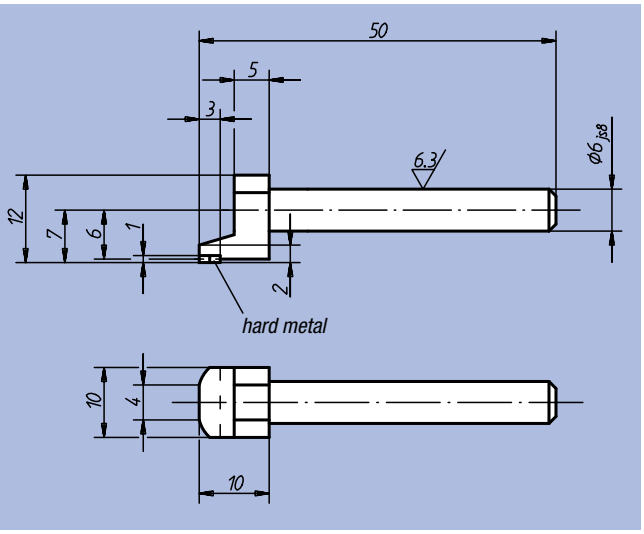

Order No.	g
33035-06050	14

Probe with reduced face surface

for fixed stop



Material:
Tool steel.
Face surface: insert in hard metal

Surface finish:
Black oxide finish

Sample order:
nlm 33036-06050

Note:
This probe is suitable for
Oscillating Measuring Yoke 33160.

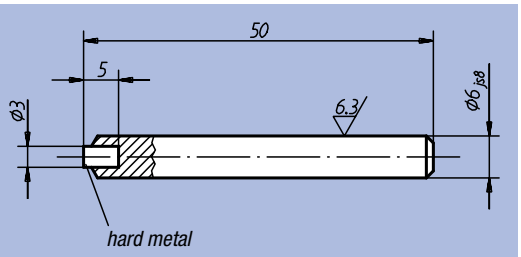

Example for mounting:

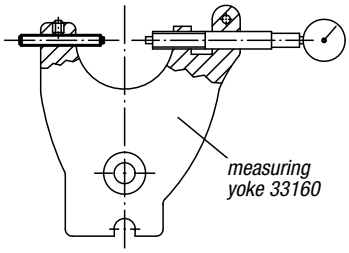

Order No.	g
33036-06050	11

Extension for measuring inserts

fixed stop



Material:
Tool steel

Surface finish:
Black oxide finish

Sample order:
nlm 33038-06042

Note:
This extension is suitable for
Oscillating Measuring Yoke 33160.
Measuring Inserts see 33040
up to 33052.

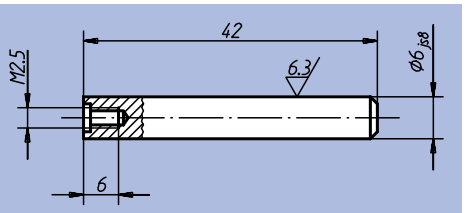

Order No.	g
33038-06042	9

Measuring Inserts

with rounded cone point



Material:
Steel or cone point in hard metal

Surface finish:
Black oxide finish

Sample order:
nlm 33040-1025250

Note:
Dial Gauges see 32540 and 32542.

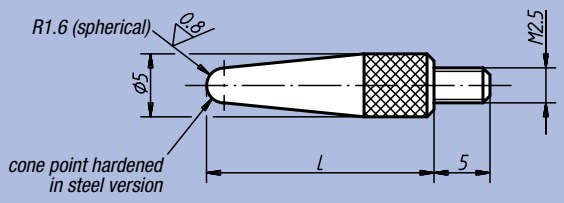

Order No. Surface finish cone point in steel	Order No. Surface finish cone point in hard metal	L	g
33040-1025080	33040-2025080	8	11
33040-1025125	33040-2025125	12,5	16
33040-1025160	33040-2025160	16	20
33040-1025200	33040-2025200	20	24
33040-1025250	33040-2025250	25	26
33040-1025280	33040-2025280	28	29
33040-1025355	33040-2025355	35,5	40

Measuring Inserts

with spherical point



Material:
Tool steel

Surface finish:
Hardened and black oxide finish

Sample order:
nlm 33042-040016

Note:
Dial Gauges see 32540 and 32542.

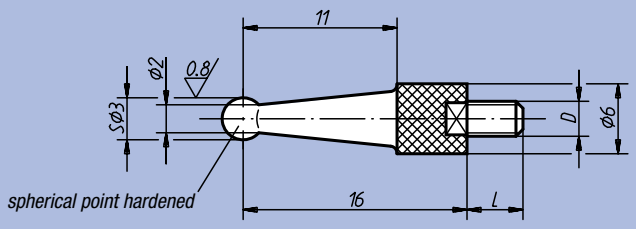

Order No.	D	L	g
33042-025016	M2,5	5	2
33042-040016	M4	5	2

Measuring Inserts

wedge-shaped



Material:
Steel

Surface finish:
Black oxide finish.
Support surface hardened

Sample order:
nlm 33044-025080

Note:
Dial Gauges see 32540 and 32542.

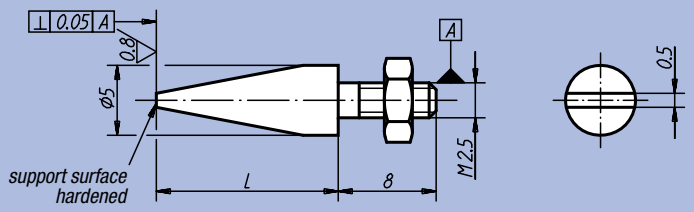

Order No.	L	g
33044-025080	8	13
33044-025125	12,5	18
33044-025160	16	22
33044-025200	20	25
33044-025280	28	33

Measuring Inserts

with face surface



Material:
Steel or face surface in hard metal

Surface finish:
Black oxide finish

Sample order:
nlm 33046-2025160

Note:
Dial Gauges see 32540 and 32542.

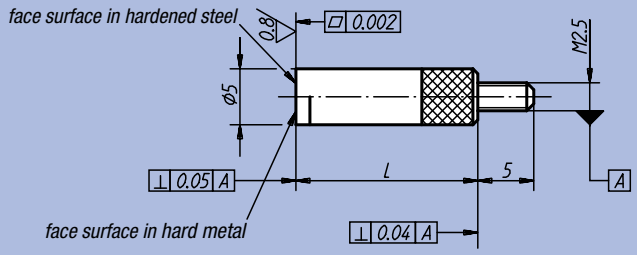

Order No. Surface finish support surface in steel	Order No. Surface finish support surface in hard metal	L	g
33046-1025080	33046-2025080	8	16
33046-1025125	33046-2025125	12,5	20
33046-1025160	33046-2025160	16	25

Measuring Inserts

with oval point



Material:
Steel

Surface finish:
Hardened and black oxide finish

Sample order:
nlm 33048-025080

Note:
Dial Gauges see 32540 and 32542.

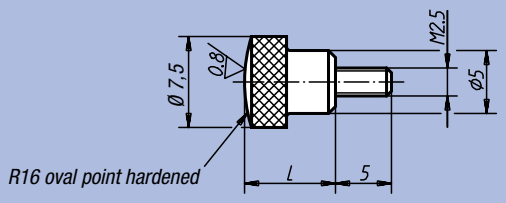

Order No.	L	g
33048-025080	8	2

Measuring Inserts

with extended face surface



Material:
Steel

Surface finish:
Hardened and black oxide finish

Sample order:
nlm 33050-025080

Note:
Dial Gauges see 32540 and 32542.

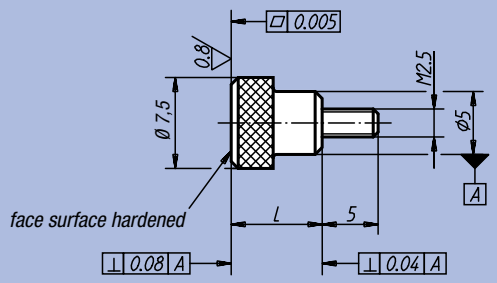

Order No.	L	g
33050-025080	8	2

Extensions

for measuring inserts



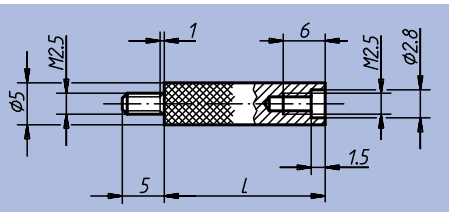

Material:
Steel

Surface finish:
Black oxide finish

Sample order:
nlm 33052-025120

Note:
Suitable for Measuring Inserts 33040 up to 33050 as well as Measuring Inserts Set 33058.
Dial Gauges see 32540 and 32542.

Order No.	L	g
33052-025080	8	1,0
33052-025100	10	1,4
33052-025120	12	1,6
33052-025160	16	2,0
33052-025200	20	2,6
33052-025240	24	3,1
33052-025300	30	4,7
33052-025320	32	4,0
33052-025400	40	5,9
33052-025500	50	7,4
33052-025600	60	8,9
33052-025700	70	10,5
33052-025800	80	12,0
33052-025900	90	13,5

Measuring Inserts Set

10 parts

Material:
Measuring inserts in hardened steel; box in plastic

Surface finish:
Black oxide finish

Sample order:
nlm 33058-01

Note:
Thread M 2.5.
Content:
9 inserts
1 extension
(length 30 mm).



Order No.	g
33058-01	72

Measuring Inserts in hardened steel

thread M 2.5



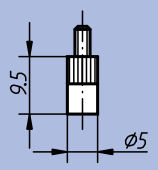

Order No.
33058-015

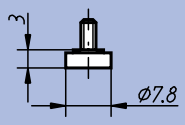

Order No.
33058-020

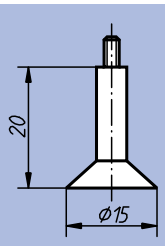

Order No.
33058-025

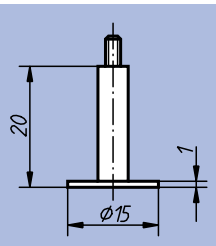

Order No.
33058-030

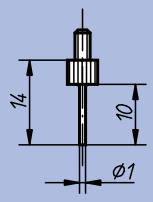

Order No.
33058-035

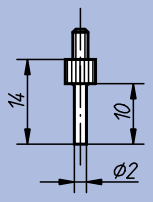

Order No.
33058-040

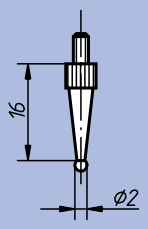

Order No.
33058-045

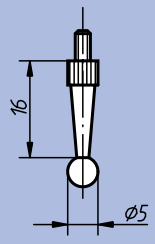

Order No.
33058-050

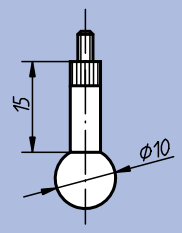

Order No.
33058-055

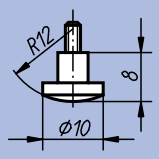

Order No.
33058-060

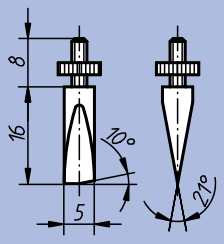

Order No.
33058-065

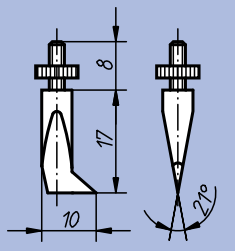

Order No.
33058-070

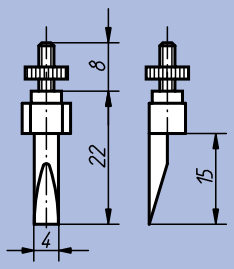

Order No.
33058-075

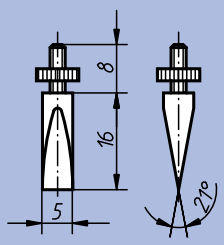

Order No.
33058-080

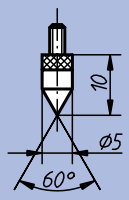

Order No.
33058-085

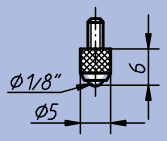

Order No.
33058-090

Measuring Inserts in hard metal

thread M 2.5



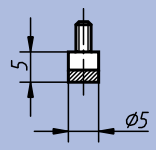

Order No.
33058-515

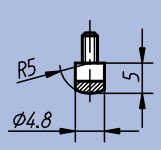

Order No.
33058-520

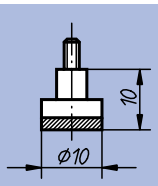

Order No.
33058-525

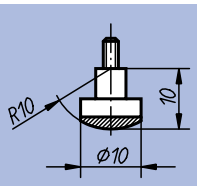

Order No.
33058-530

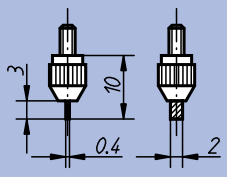

Order No.
33058-535

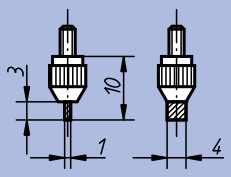

Order No.
33058-540

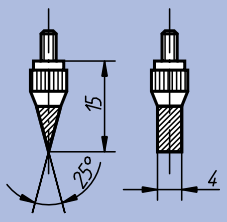

Order No.
33058-545

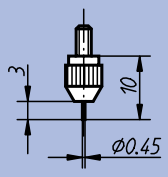

Order No.
33058-550

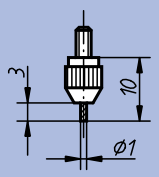

Order No.
33058-555

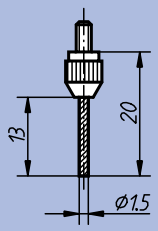

Order No.
33058-560

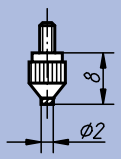

Order No.
33058-565

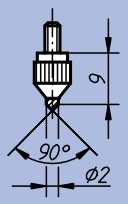

Order No.
33058-570

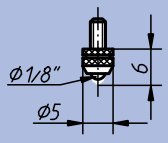

Order No.
33058-575

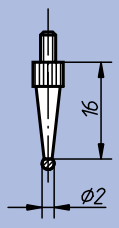

Order No.
33058-580

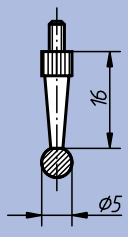

Order No.
33058-585

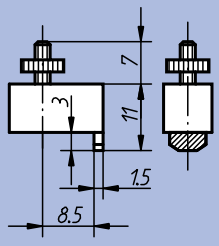

Order No.
33058-590

Housing of protection

for dial gauges



Material:
Steel

Surface finish:
Painted yellow

Sample order:
nlm 33060-050086

Note:
Dial Gauges see 32540 and 32542.
Screw Connections for dial gauges see 33000 and 33002.
Holder of dial gauges see 33010 up to 33018.

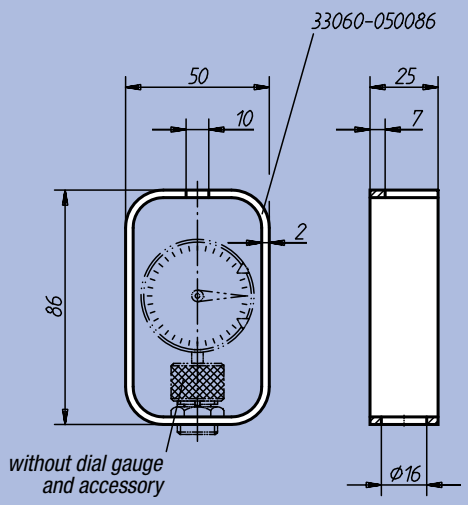

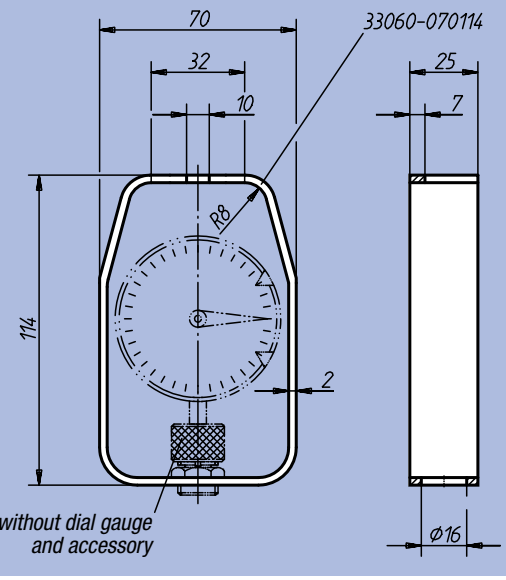

Order No.	kg
33060-050086	0,100
33060-070114	0,120

Technical Information for holder of dial gauges

For alternative mounting of holder of dial gauges with deflection:

– fixed adaptor M8/M6 (double thread)

– fixed adaptor M8/Ø8 (thread and smooth bolt)

Both fixed adaptors are supplied per holder of dial gauges with deflection.

fixed adaptor M8/M6

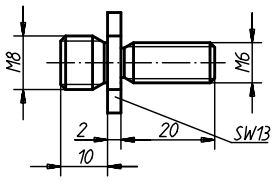

fixed adaptor M8/Ø8

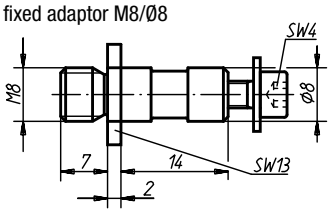

Modification of the probe direction:
the probe direction can be trouble-free changed by easily alteration of the pressure spring (from inside to outside)

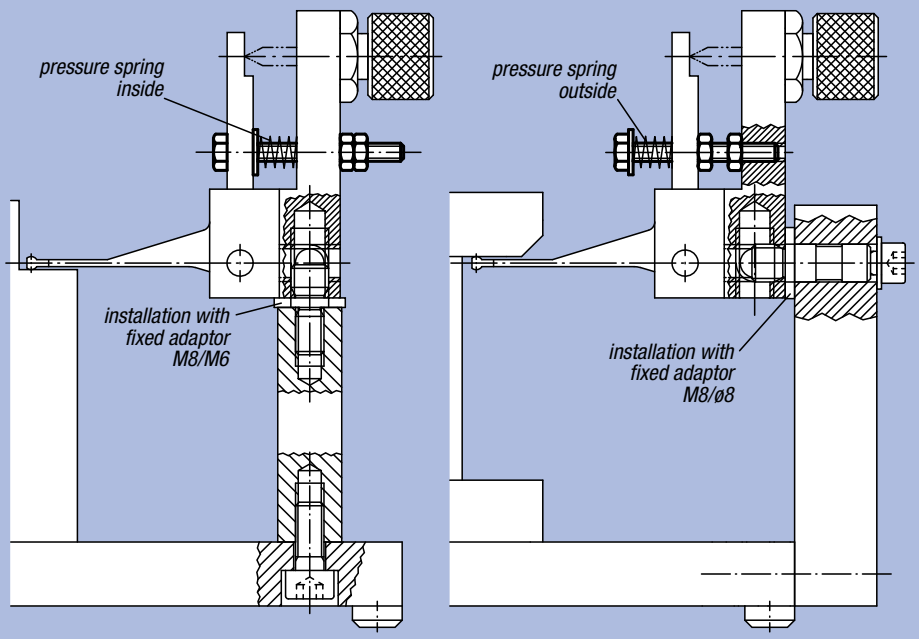

Application: for simultaneous control of 4 height dimensions with holder of dial gauges

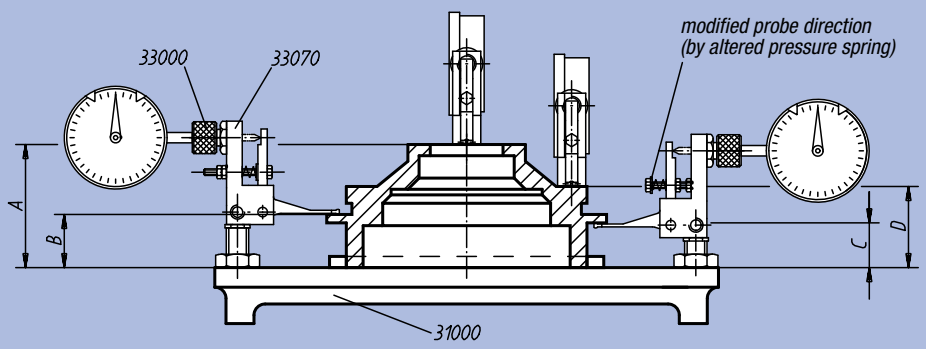

Holder of dial gauges with deflection by 90°



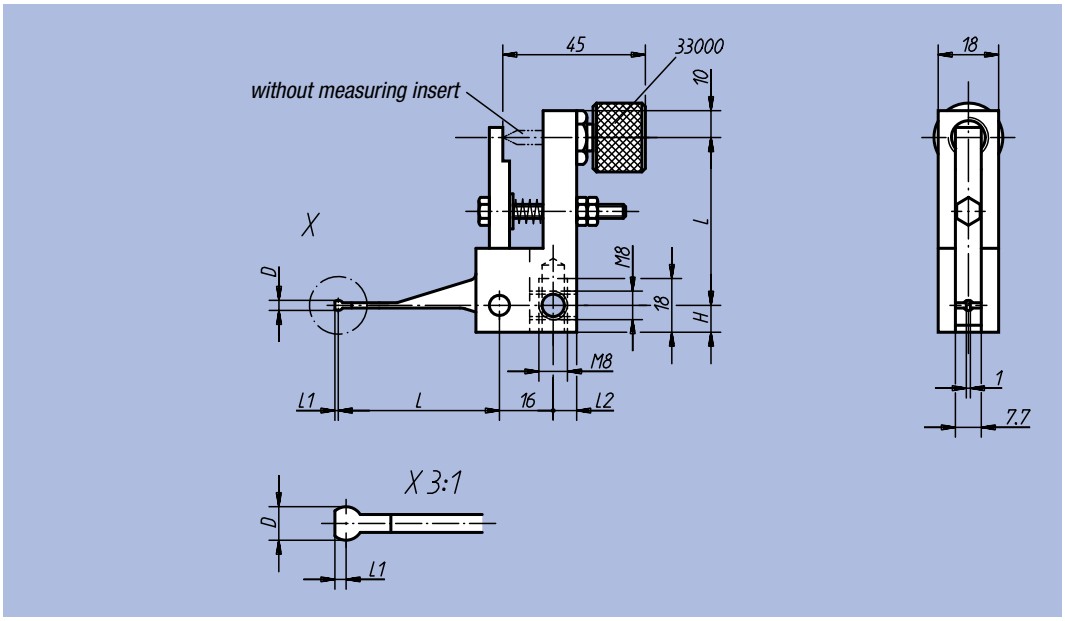

Material:
Steel

Surface finish:
Black oxide finish

Sample order:
nlm 33070-04803

Note:
Direction modification of the probe and mounting of the holder of dial gauges with deflection by means of fixed adaptors (they are supplied) see Technical Information.
Dial Gauges see 32540 and 32542.
Measuring Inserts see 33040 up to 33052.

Order No.	L	D	L1	L2	H	kg
33070-04803	48	3	1	7	8	0,185
33070-07008	70	8	1,5	6	10	0,265

Holder of dial gauges with deflection by 90°

probe with thread



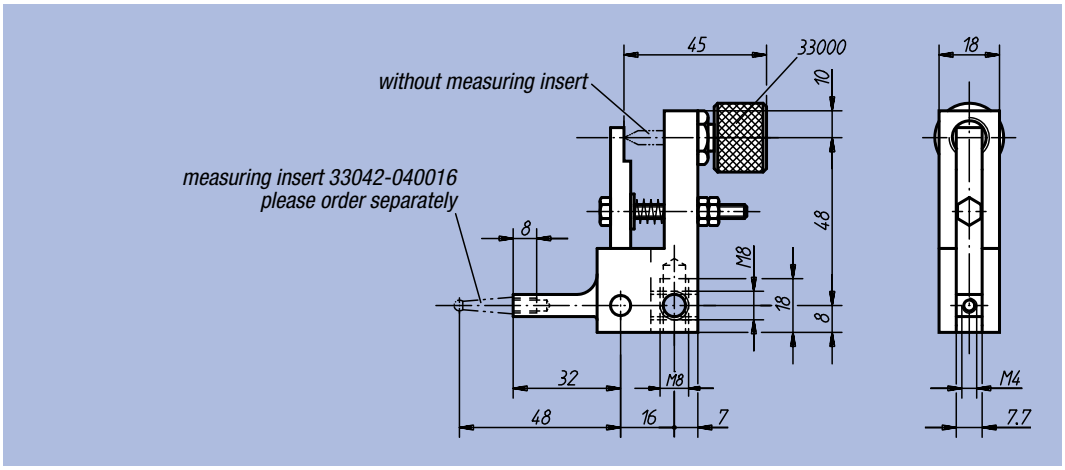

Material:
Steel

Surface finish:
Black oxide finish

Sample order:
nlm 33072-048

Note:
Direction modification of the probe and mounting of the holder of dial gauges with deflection by means of fixed adaptors (they are supplied) see Technical Information.
Dial Gauges see 32540 and 32542.
Measuring Inserts see 33040 up to 33052.

Order No.	kg
33072-048	0,195

Holder of dial gauges with deflection by 90°

probe with borehole



Material, surface finish:
Base body in aluminium,
black anodized;
probe in steel precision casting,
black oxide finish

Sample order:
nlm 33074-050

Note:
Direction modification of the probe and mounting of the holder of dial gauges with deflection by means of fixed adaptors (they are supplied) see Technical Information.
Dial Gauges see 32540 and 32542.
Measuring Inserts see 33040 up to 33052.

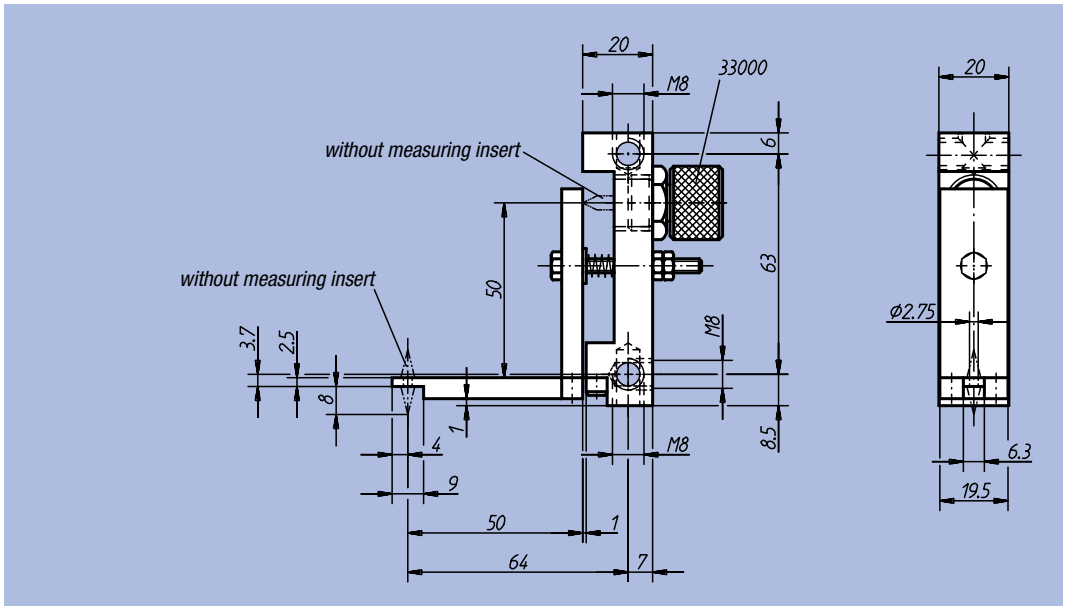

Order No.	kg
33074-050	0,155

Holder of dial gauges with deflection by 180°

probe with borehole



Material, surface finish:
Base body in aluminium,
black anodized;
probe in steel precision casting,
black oxide finish

Sample order:
nlm 33076-050

Note:
Direction modification of the probe and mounting of the holder of dial gauges with deflection by means of fixed adaptors (they are supplied) see Technical Information.
Dial Gauges see 32540 and 32542.
Measuring Inserts see 33040 up to 33052.

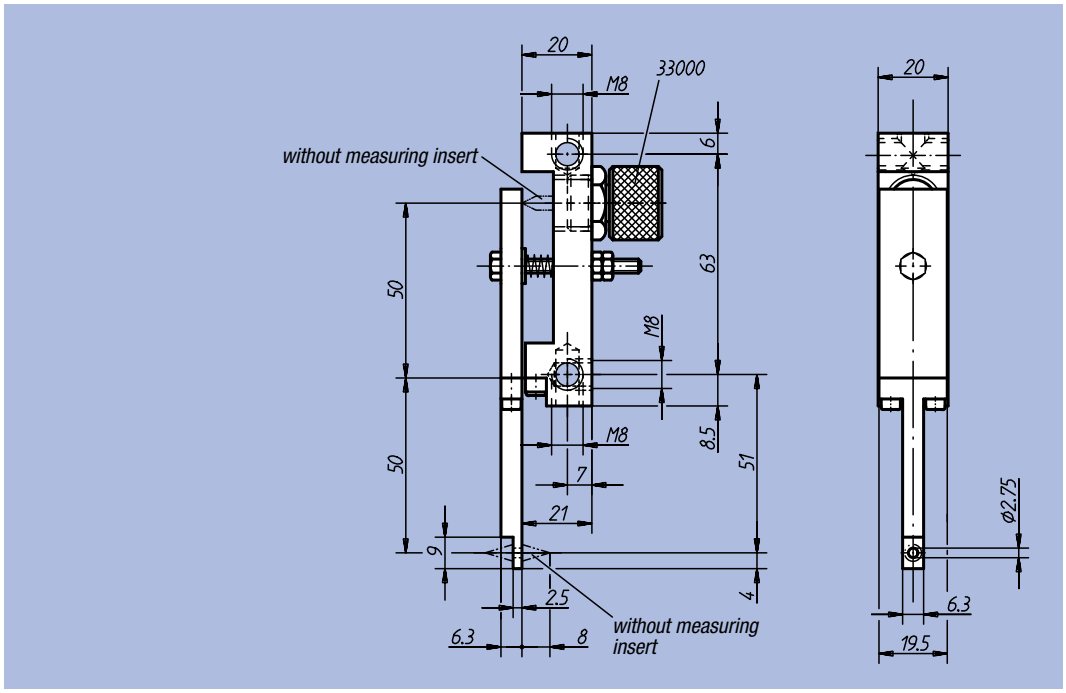

Order No.	kg
33076-050	0,155

Holder of dial gauges with deflection by 90°

probe with thread



Material, surface finish:
Base body in aluminium,
black anodized;
probe in steel precision casting,
black oxide finish

Sample order:
nlm 33078-050

Note:
Direction modification of the probe and mounting of the holder of dial gauges with deflection by means of fixed adaptors (they are supplied) see Technical Information.
Dial Gauges see 32540 and 32542.
Measuring Inserts see 33040 up to 33052.

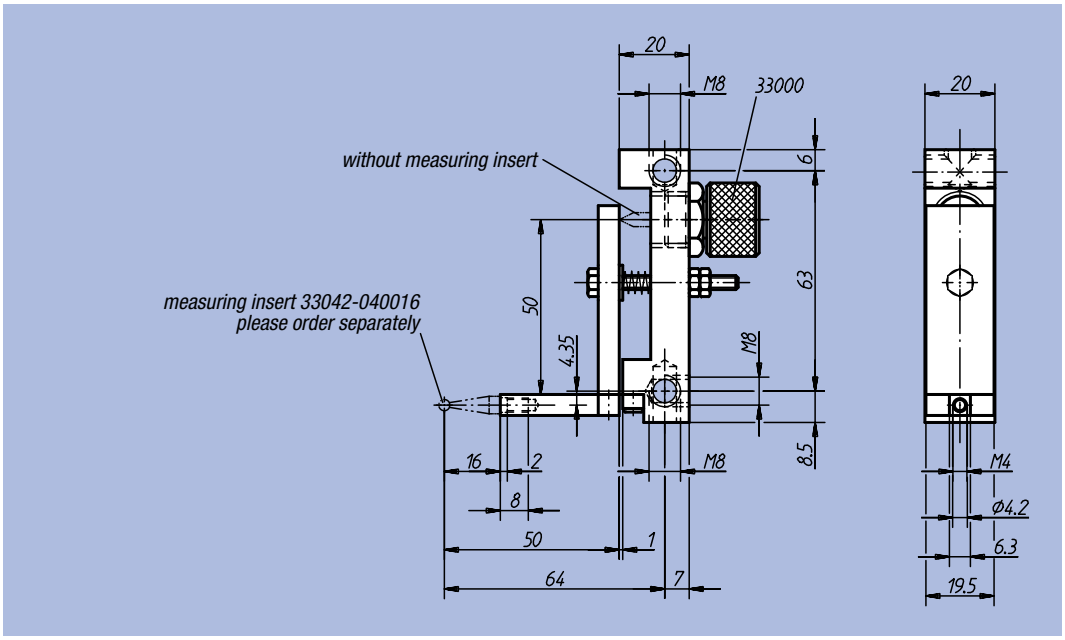

Order No.	kg
33078-050	0,150

Holder of dial gauges with deflection by 180°

probe with thread



Material, surface finish:
Base body in aluminium,
black anodized;
probe in steel precision casting,
black oxide finish

Sample order:
nlm 33080-050

Note:
Direction modification of the probe and mounting of the holder of dial gauges with deflection by means of fixed adaptors (they are supplied) see Technical Information.
Dial Gauges see 32540 and 32542.
Measuring Inserts see 33040 up to 33052.

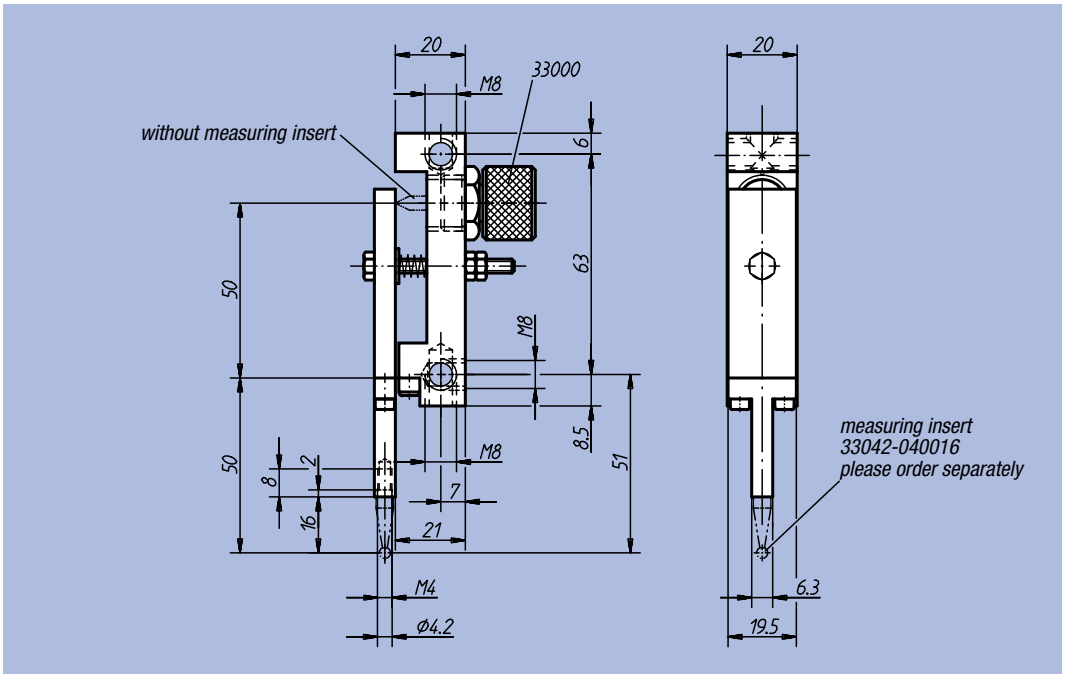

Order No.	kg
33080-050	0,150

Prism Attachments

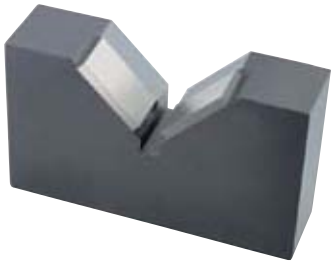

Material:
Tempered steel;
support in hard metal

Surface finish:
Black oxide finish;
support surface ground, natural finish

Sample order:
nlm 33090-010020

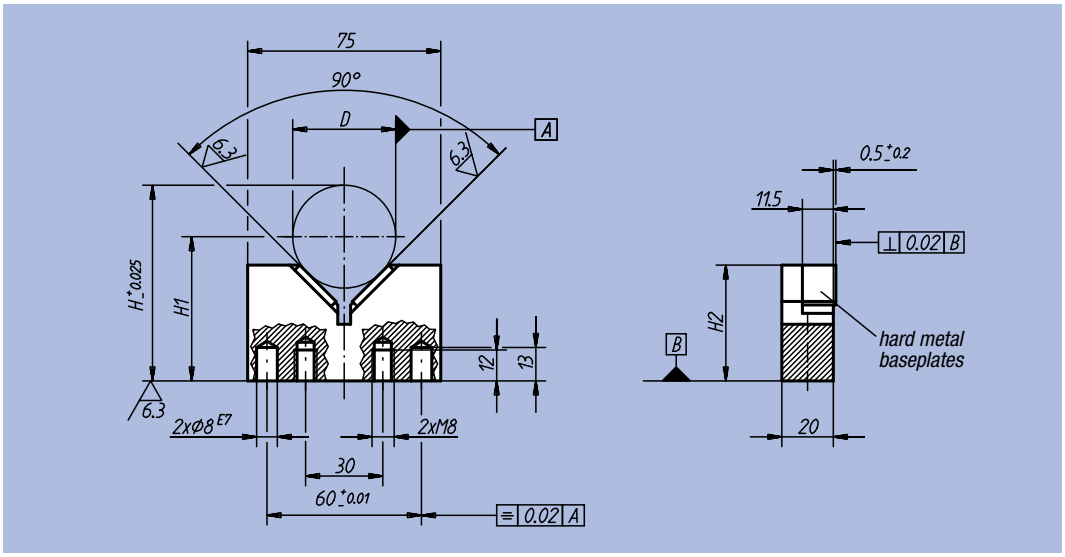

Order No.	D min.	D max.	D Test-Ø	H	H1	H2	kg
33090-010020	10	20	20	66	D/2 x √2 + 41,857	53	0,550
33090-020040	20	40	40	76	D/2 x √2 + 27,716	45	0,440

Spacers

for prisms attachments



Material:
Tempered steel

Surface finish:
Black oxide finish

Sample order:
nlm 33092-012

Note:
Spacers are used as height elements for Prisms Attachments 33090.

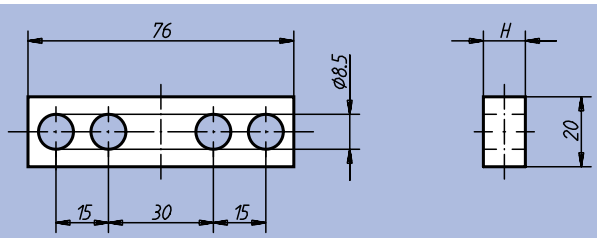

Order No.	H	kg
33092-005	5	0,050
33092-008	8	0,080
33092-012	12	0,120
33092-015	15	0,150
33092-020	20	0,200

Measuring Columns

with thread



Material:
Tempered steel

Surface finish:
Black oxide finish

Sample order:
nlm 33100-16133

Note:
Measuring Columns are used for example as height elements in conjunction with Plane-Tables 31000 and Holder of dial gauges with deflection 33070 up to 33080. Slotted Round Nuts see 33105.

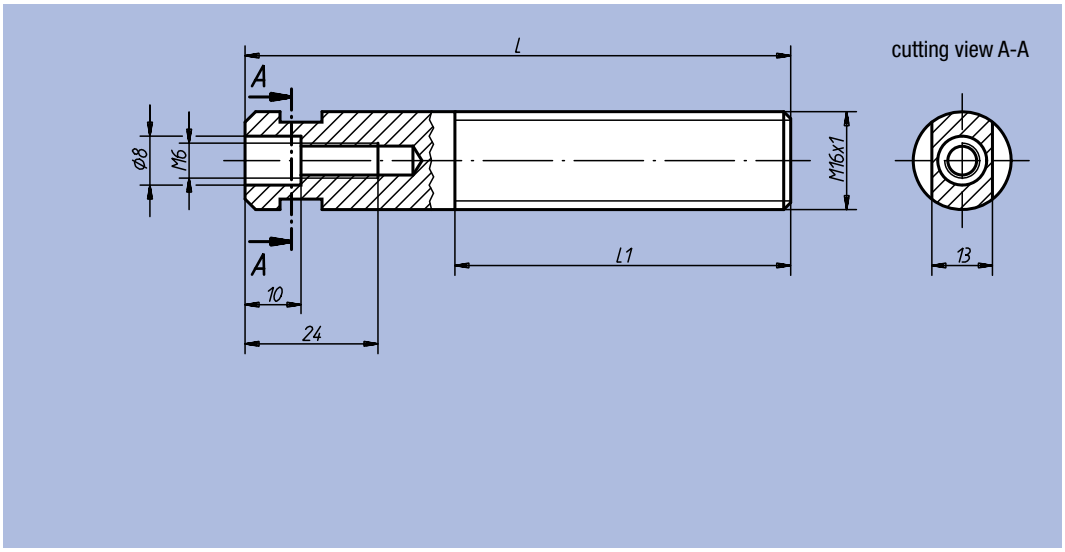

Order No.	L	L1	kg
33100-16063	63	63	0,080
33100-16098	98	60	0,135
33100-16133	133	60	0,190
33100-16168	168	60	0,245

Slotted Round Nuts



Material:
Tempered steel

Surface finish:
Black oxide finish

Sample order:
nlm 33105-16

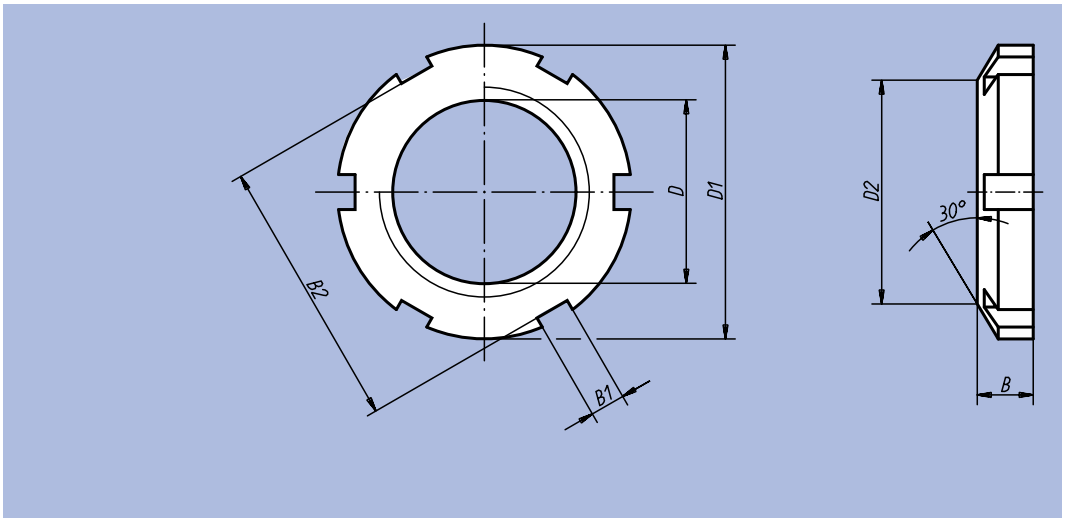

Order No.	D	D1	D2	B	B1	B2	Number of slots	g
33105-16	M16x1	26	21	6	4	22	4	13
33105-36	M36x1,5	52	44	9	6	46	6	65

Pivoting Columns



Material:
Steel

Surface finish:
Black oxide finish

Sample order:
nlm 33110-200

Note:
Dial Gauges see 32540 and 32542.
Measuring Arms see 33150.

Application:
For height measurements.

Installation:
- Fully dismantle the pivoting column.
- Fix guide column to the measurin table with washer and socket head screw.
- Place the conical clamping ring in position and press on the seat-engaging surface during the clamping procedure.
- Insert the conical pivoting sleeve.
- Fix the measuring arm onto the conical pivoting sleeve.
- Fix the conical centring ring onto the conical pivoting sleeve with two threaded bolts.
- Insert the clamping pin into the guide column.
- Push the conical ring onto the guide column such that the clamping pin engages in the slot on the conica ring. Ensure that the seat of the conical ring has no play in it.
- Mount the pressure spring on the block with the clamping ring to prevent axial play.
- As a basic principle: Lubricate all running surfaces.

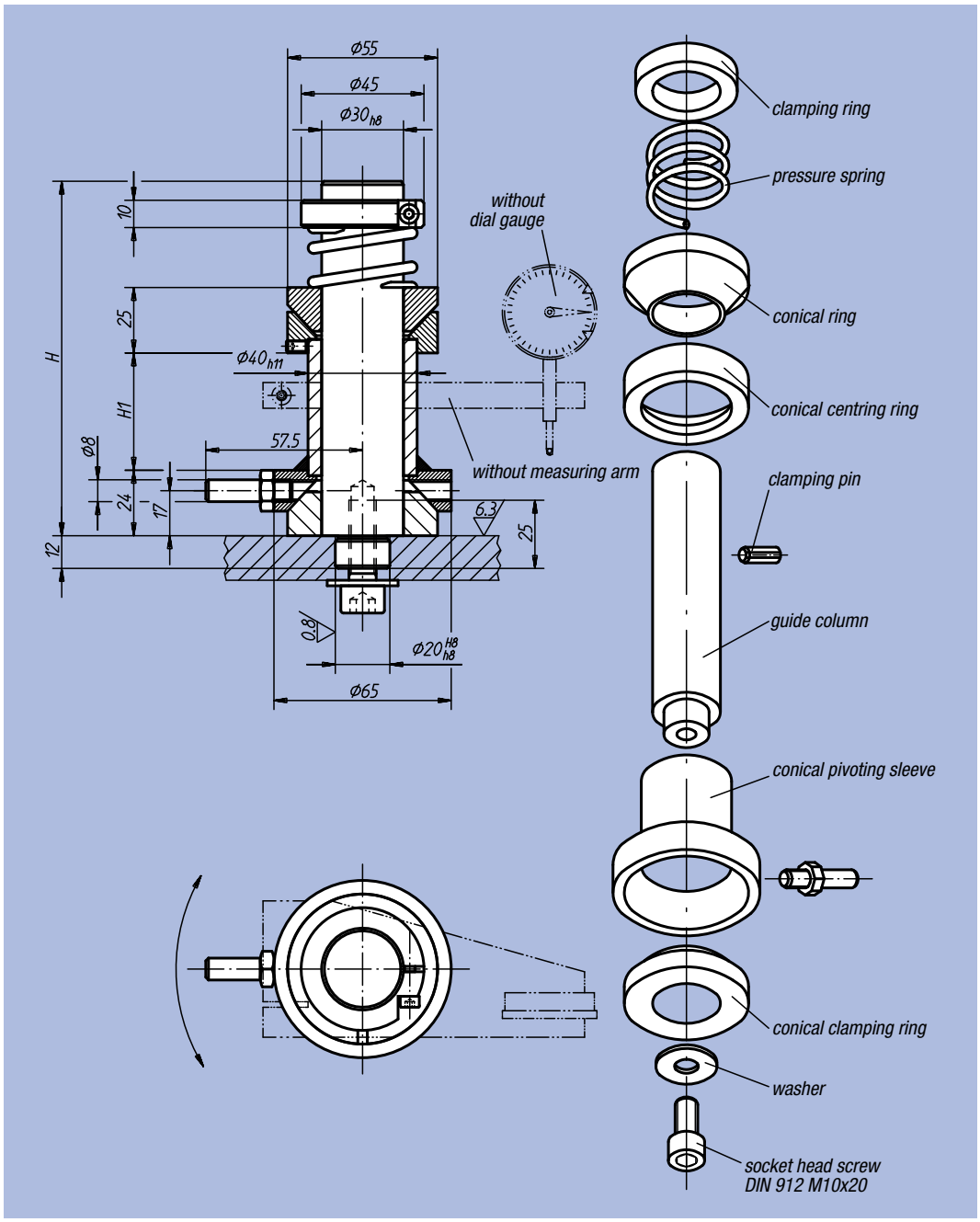

Order No.	H	H1	kg
33110-130	130	43	1,650
33110-160	160	73	1,920
33110-200	200	113	2,280
33110-250	250	163	2,750

Pivoting Systems



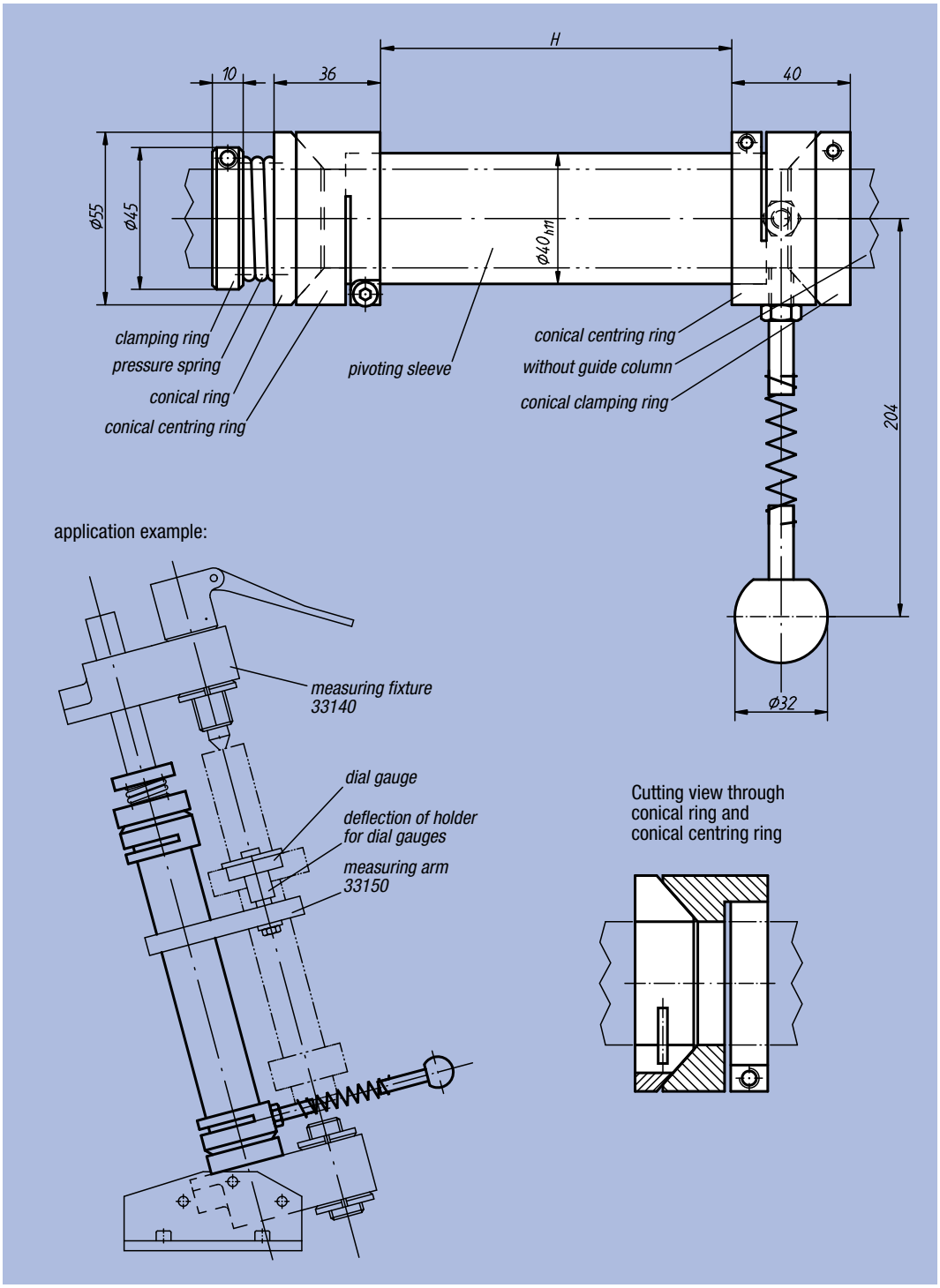

Material:
Steel

Surface finish:
Black oxide finish

Sample order:
nlm 33115-426

Note:
The Pivoting Systems are adapted to Measuring Fixtures 33140. Measuring Arms see 33150.

Installation:
- Place the conical clamping ring on the guide column and clamp in the desired position.
- Fix the conical centring ring to the pivoting sleeve and insert it such that the conical centring ring lies on top of the conical clamping ring.
- Fix the measuring arm onto the pivoting sleeve.
- Fix the second conical centring ring onto the pivoting sleeve.
- Insert the conical ring and pressure spring.
- Mount the pressure spring on the block with the clamping ring to prevent axial play.
- As a basic principle: Lubricate all running surfaces.

Order No.	H	kg
33115-200	200	1,845
33115-276	276	2,125
33115-426	426	2,665
33115-536	536	3,040

Measuring Fixtures



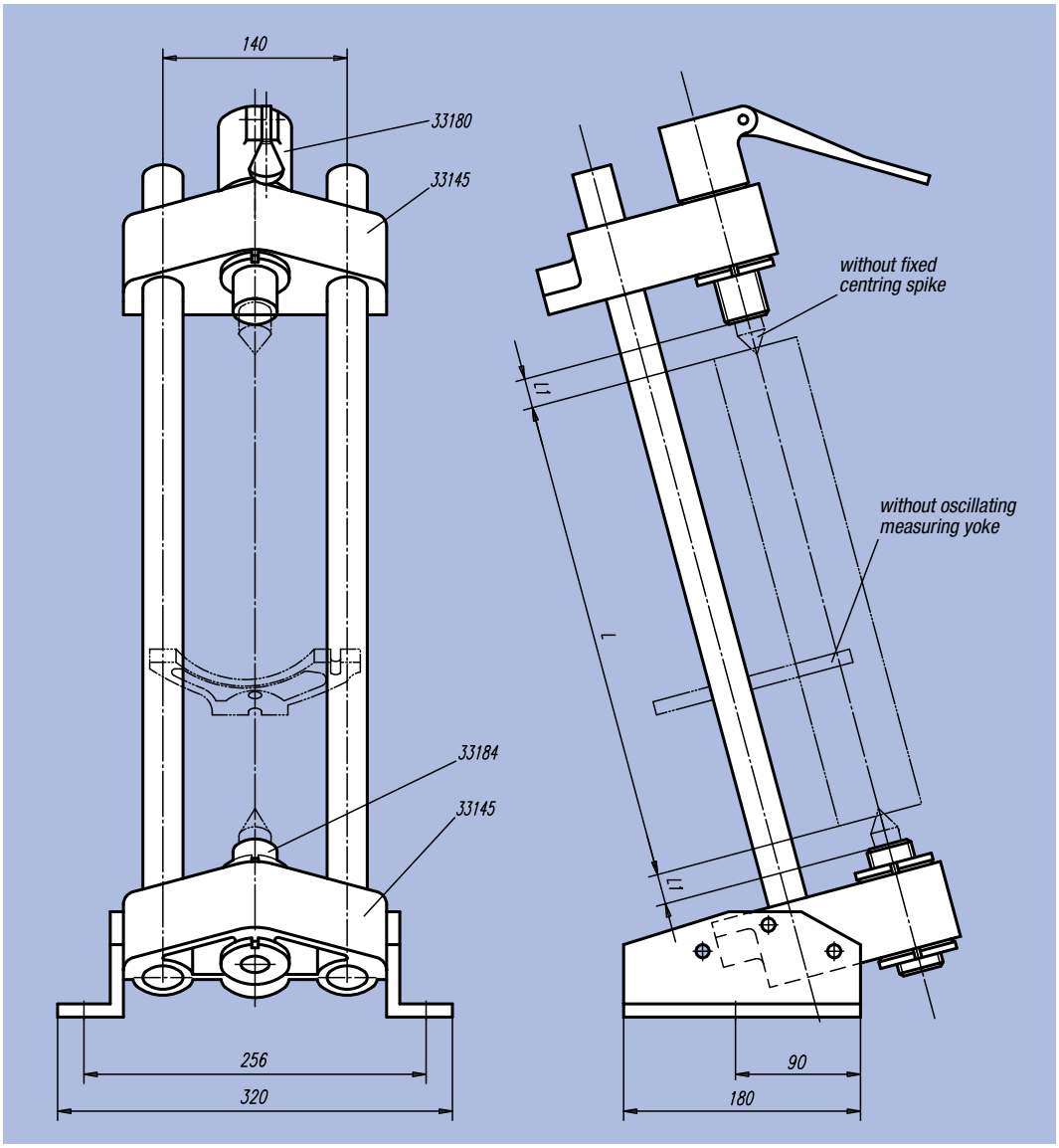

Material:
Steel;
shaft bearing GJL 200

Surface finish:
Steel parts black oxide finish,
shaft bearing painted

Sample order:
nlm 33140-165274

Note:
See application example.

Order No.	L for L1 = 32 (with fixed centering point 33190-02096)	L for L1 = 49 (with fixed centering point 33190-02113)	kg
33140-240444	274 up to 444	240 up to 410	14,600
33140-410524	444 up to 524	410 up to 490	15,400

Application example: Measuring Fixture

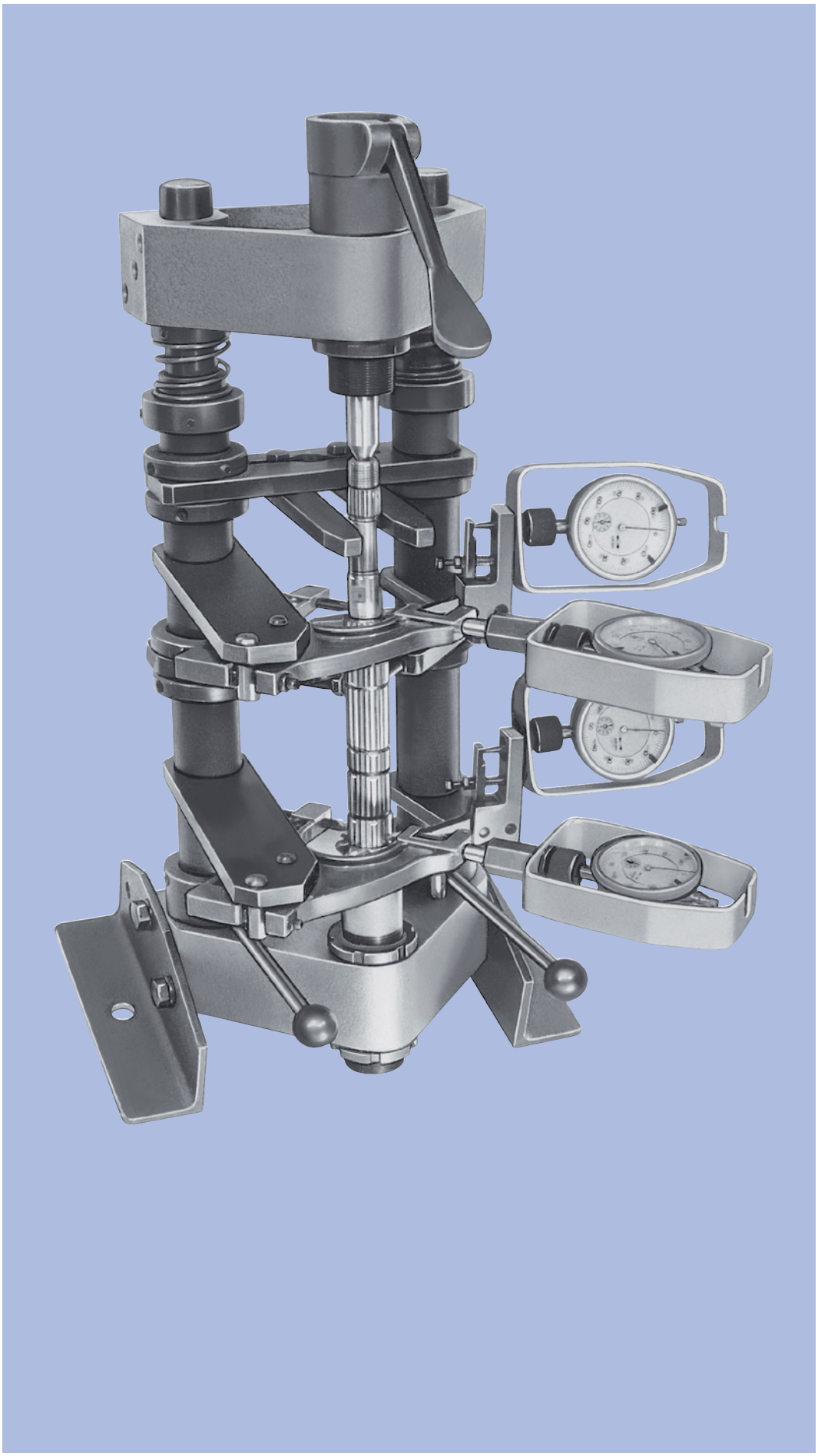

Shaft Bearing

for measuring fixtures



Material:
GJL 200
Surface finish:
Painted
Sample order:
nlm 33145-01

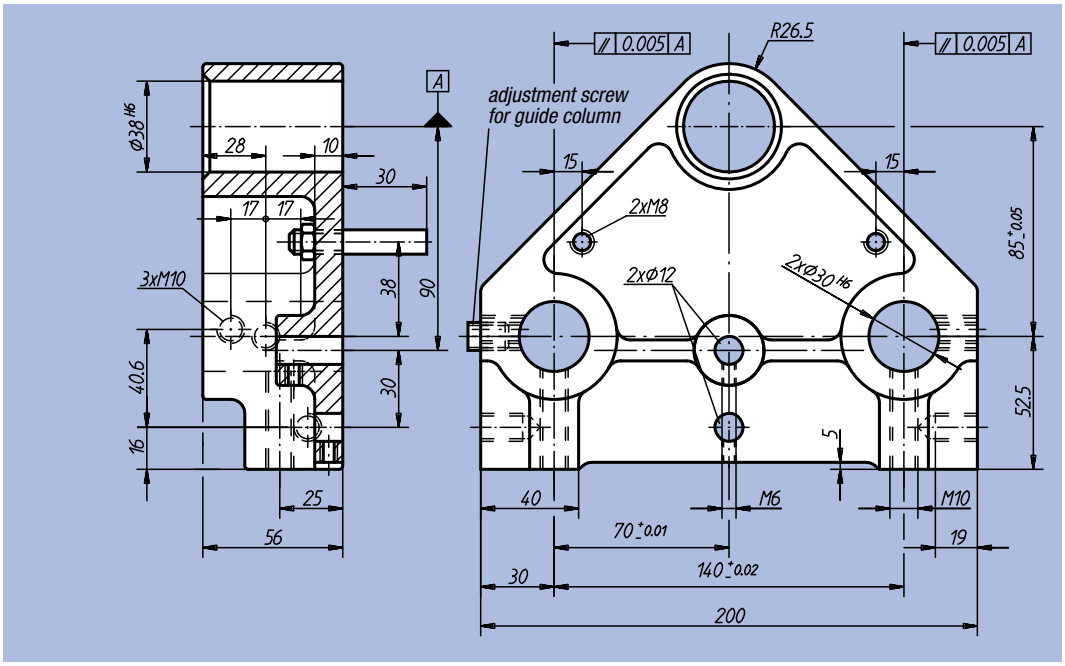

Order No.	kg
33145-01	4,135

Measuring Arms



Material:
Steel
Surface finish:
Black oxide finish
Sample order:
nlm 33150-095
Note:
The Measuring Arms are suitable for Pivoting Columns 33110 and Pivoting Systems 33115.

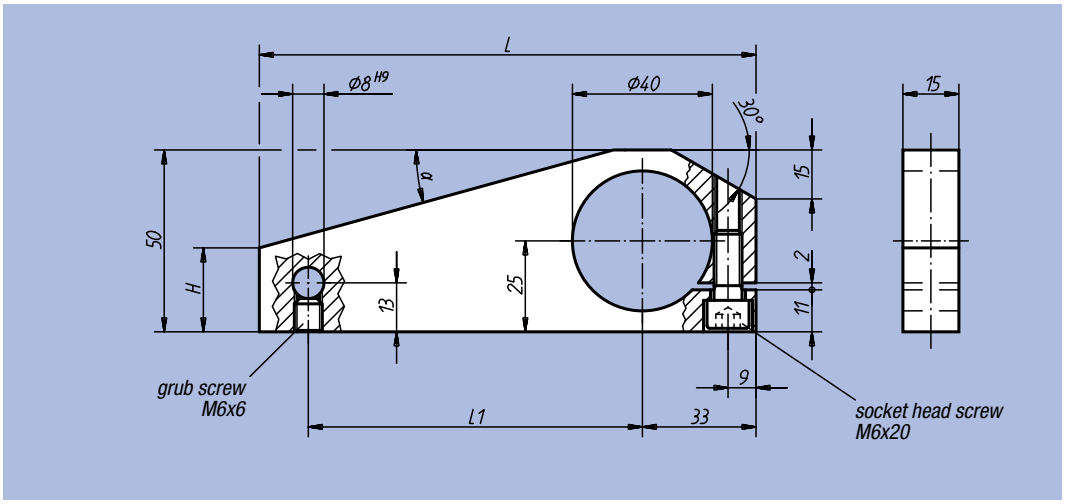

Order No.	L	L1	H	α	kg
33150-095	95	50	18	30°	0,275
33150-140	140	95	23	15°	0,280

Spring mounted Centre Sleeve

with tension lever



Material:
Steel

Surface finish:
Black oxide finish

Sample order:
nlm 33180-02

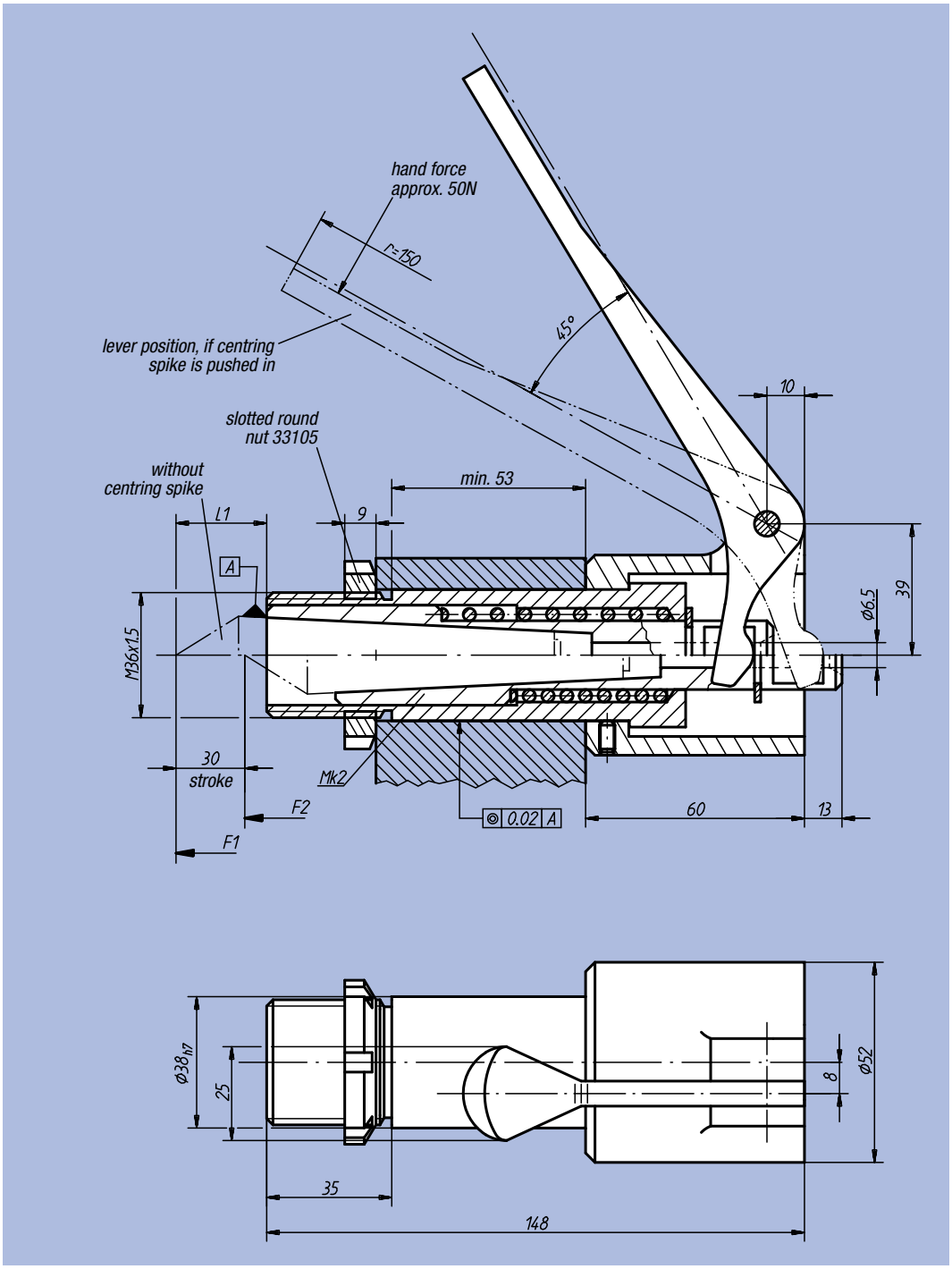

Order No.	L1	suitable centering point	Initial pressure F1 approx. N	Final pressure F2 approx. N	kg
33180-02	32 41 49	33190-02096 33190-02105 33190-02113	100	150	1,045

Spring mounted Centre Sleeve

with lifting curve



Material:
Steel;
ball in black duroplastic PF 31

Surface finish:
Black oxide finish

Sample order:
nlm 33182-02

Note:
The max. course of 15 mm can be reached by rotation of lifting curve by 180°.

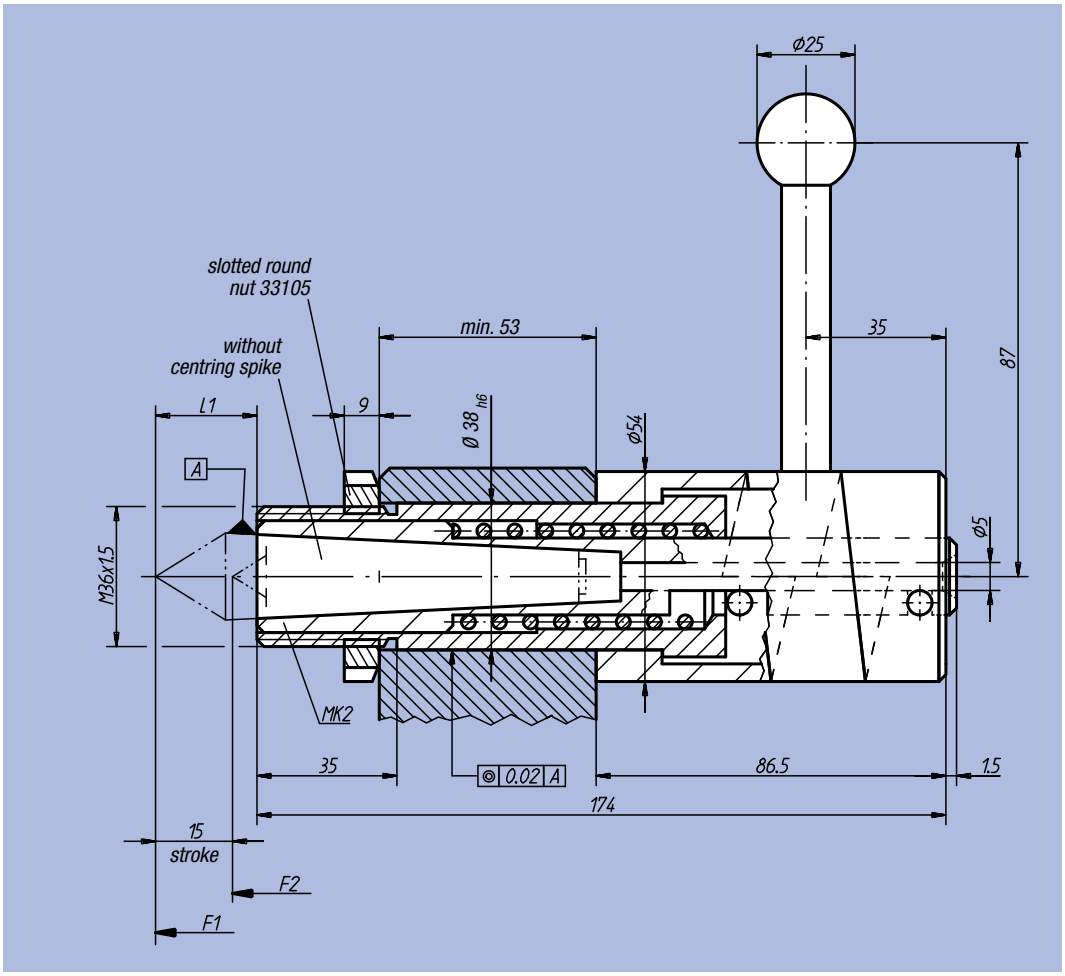

Order No.	L1	suitable centering point	Initial pressure F1 approx. N	Final pressure F2 approx. N	kg
33182-02	32 41 49	33190-02096 33190-02105 33190-02113	100	137	1,900

Adjustable Collet

for centring spikes



Material:
Body 1.7220

Surface finish:
Black oxide finish

Sample order:
nlm 33184-02

Note:
Suitable Centring Spikes see 33190.

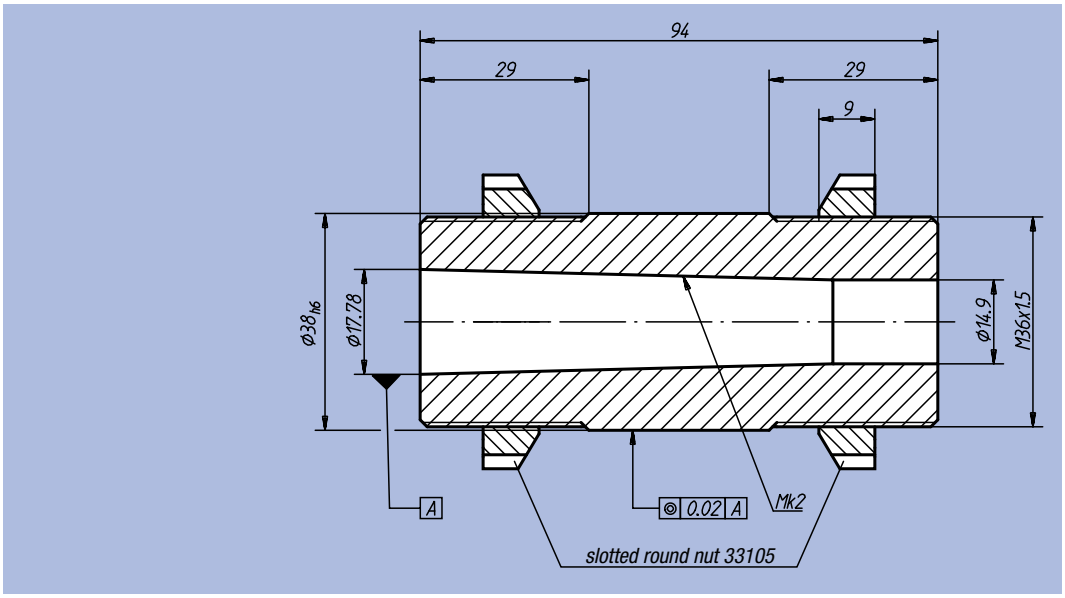

Order No.	kg
33184-02	0,750

Fixed Centring Spike



Material:
1.2067

Surface finish:
Hardened and ground, natural finish

Sample order:
nlm 33190-02105

Note:
The Fixed Centring Spikes are suitable for: 33180, 33182 and 33184.

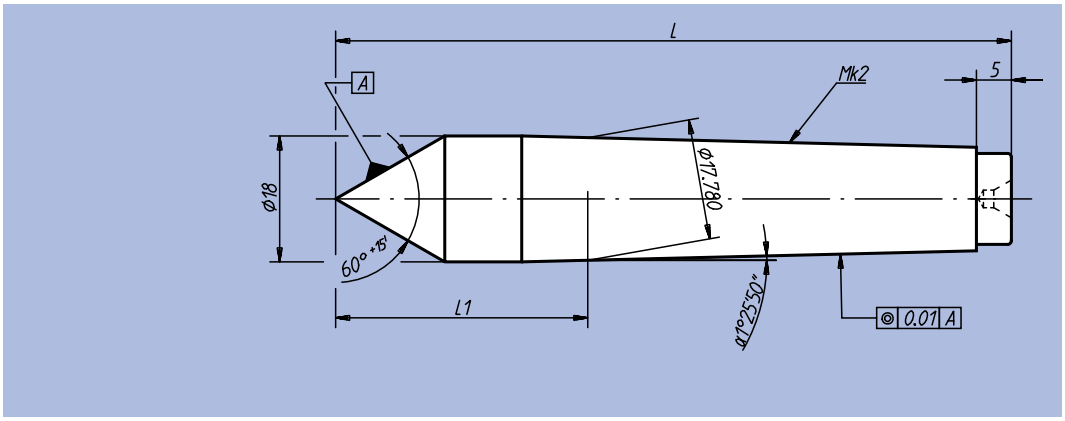

Order No.	L	L1	kg
33190-02096	96	32	0,145
33190-02105	105	41	0,170
33190-02113	113	49	0,180

Measuring Element

for toothed wheels



Material:
Steel

Surface finish:
Black oxide finish

Sample order:
nlm 33202-070

Note:
1 = Probe in tactile position
2 = Probe in resting position, engaged.

For suitable Ball Holder see 32205.
Dial Gauges see 32540 and 32542.
Measuring Inserts see 33040 up to 33052.

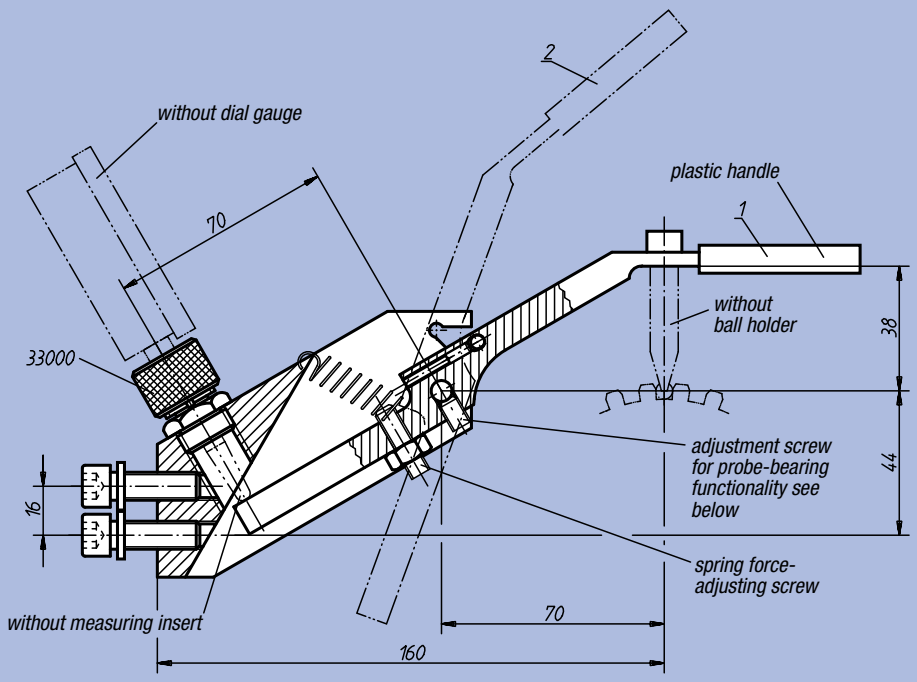

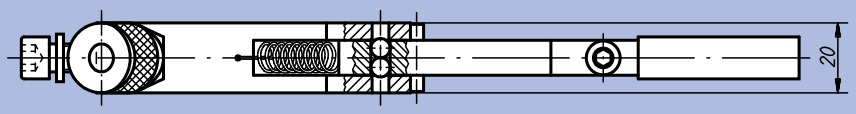

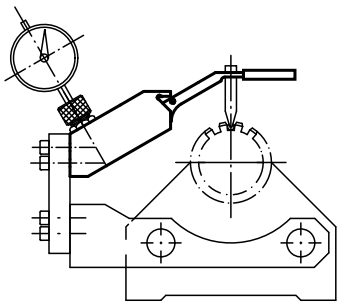

Functionality of probe bearing

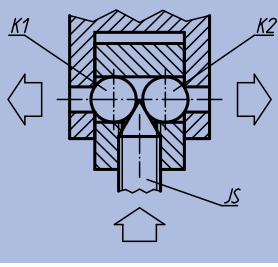

Both balls K1 and K2 are moved apart and pressed against the wall by turning the adjustment screw (JS). This allows for play-free adjustment.

Order No.	kg
33202-070	0,640

Ball Holder



Material:
Spring steel

Surface finish:
Black oxide finish

Sample order:
nlm 33205-03500

Note:
Balls in hard metal available on request.
The Ball Holders are suitable for Measuring Fixture for toothed wheel 33200 and Measuring Element for toothed wheels 33202.

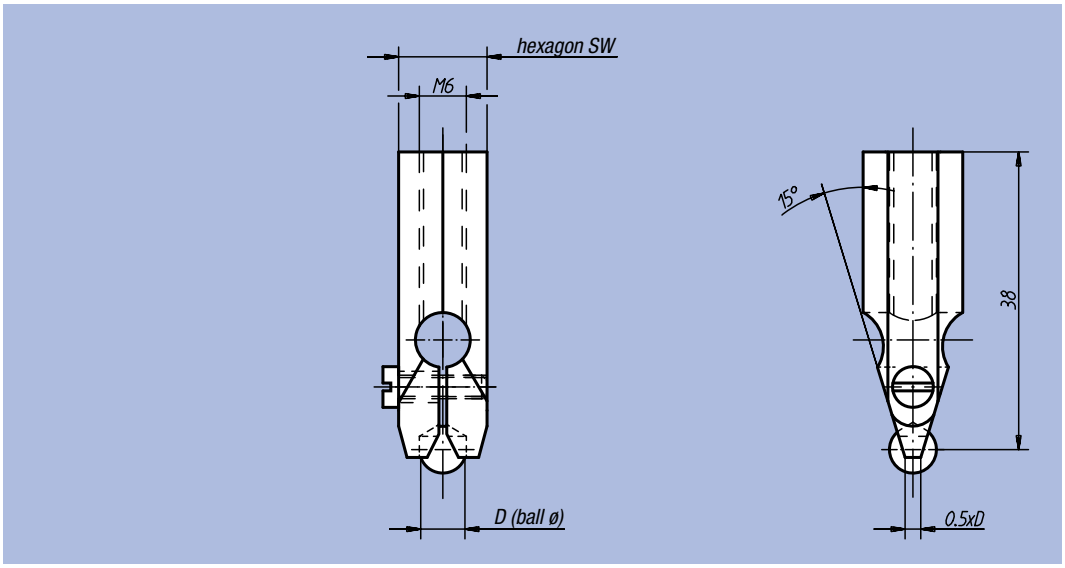

Order No.	D	SW	g
33205-02000	2,00	10	14
33205-02380	2,38	10	14
33205-02500	2,50	10	14
33205-03000	3,00	10	15
33205-03500	3,50	10	15
33205-03960	3,96	10	15
33205-04000	4,00	10	15
33205-04500	4,50	10	16
33205-04760	4,76	10	16
33205-05000	5,00	10	16
33205-05560	5,56	10	16
33205-06000	6,00	10	16
33205-06500	6,500	13	28
33205-07000	7,000	13	28
33205-07540	7,540	13	29
33205-07938	7,938	13	29
33205-08500	8,500	13	30
33205-09520	9,520	13	32
33205-10000	10,000	13	32

Clamping component set



Sample order:
nlm 33250-12

Note:
Clamping component set for measuring microscopes and optical measurement devices for fast and flexible clamping of small parts.
A wide variety of work-pieces such as plastic, punched or lathe-cut parts can be precisely positioned and securely clamped. Clamping of parts, a frequent problem in measurement tasks, is thus largely solved.

The basis of the clamping system is a high-quality clamping joint that is fixed to the measuring table. Clamping elements such as chucks or clamping clips are easily mounted on the clamping joint by means of the integrated quick-change interface.

Delivered in a wooden chest.

Application:
– chuck and vee-block for fixation of rotationally symmetrical parts
– stop angle, clamping clip and small parts clamping devices for clamping sheet metal and bent parts, for example



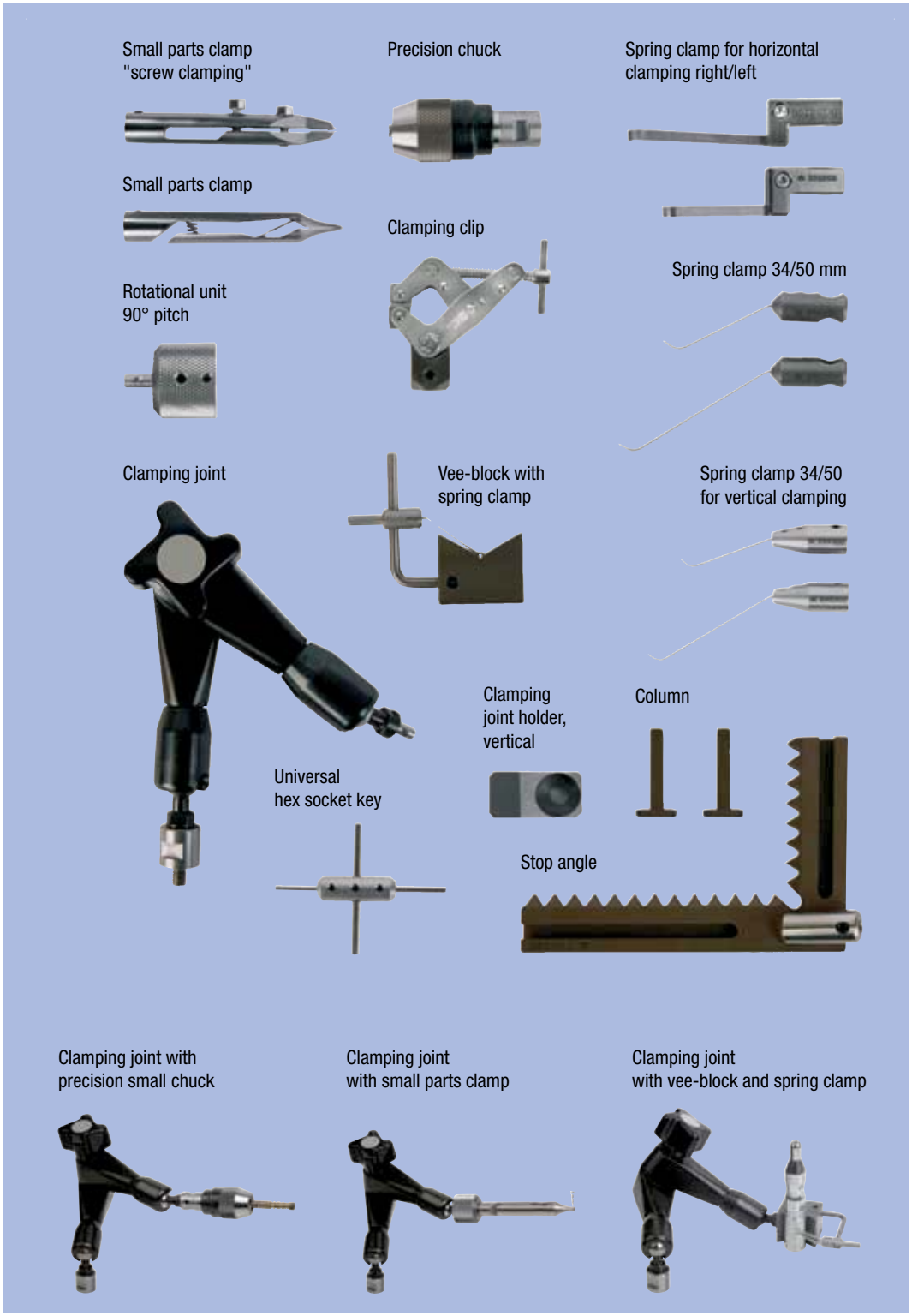

Order No.	Surface finish	Content
33250-12	12 parts	clamping joint, stop angle, rotational unit 90° pitch, spring clamp for horizontal clamping right, spring clamp for horizontal clamping left, spring clamp 34 mm, spring clamp 50 mm, small parts clamp, vee-block with spring clamp, column, clamping clip, universal hex socket key
33250-18	18 parts	clamping joint, clamping joint holder - vertical, stop angle, rotational unit 90° pitch, spring clamp for horizontal clamping right, spring clamp for horizontal clamping left, spring clamp 34 mm, spring clamp 50 mm, spring clamp 34 mm for vertical clamping, spring clamp 50 mm for vertical clamping, small parts clamp, small parts clamp „screw clamping", vee-block with spring clamp, precision chuck, 2 columns, clamping clip, universal hex socket key

Spring clamp



Material, surface finish:
Stainless steel, natural finish

Sample order:
nlm 33260-10605010

Note:
For fixation of small parts on measurement and monitoring plates.

Accessory:
Columns for spring clamp 33262.

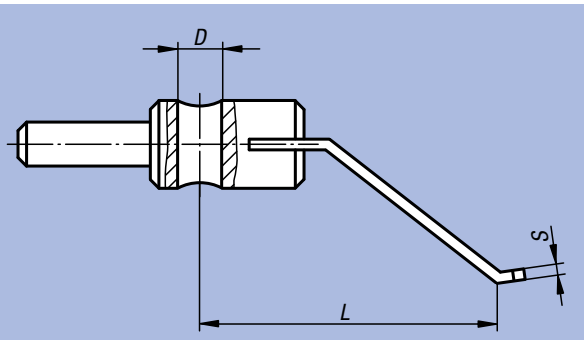

Spring clamp, flat

Spring clamp with fork



Order No.	Surface finish	D	L	S	kg
33260-10605010	flat	6	50	1	0,020
33260-10607510	flat	6	75	1	0,022
33260-11207510	flat	12	75	1	0,030
33260-11209510	flat	12	95	1	0,031
33260-21207515	fork	12	75	1,5	0,033
33260-21209515	fork	12	95	1,5	0,036

Columns

for spring clamps



Material, surface finish:
Stainless steel 1.4301, natural finish

Bestellbeispiel:
nlm 33262-0606X030
(please also indicate dimension L)

Hinweis:
Columns for holding spring clamps.

Zubehör:
Spring clamp 33260.

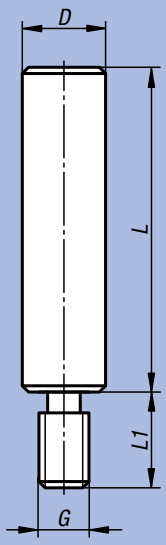



Order No.	D	G	L	L1
33262-0606X	6	M6	30 / 50	8
33262-0608X	6	M8	30 / 50	10
33262-1206X	12	M6	50 / 100	8
33262-1208X	12	M8	50 / 100	11,5
33262-1210X	12	M10	50 / 100 / 150	11,5

Notes:

norelem

TechnoShop norelem

Conveyor and Movement Technology page 1115–1140

Gauge Strip page 1141–1152
Magnetic Labels and Magnetic Envelopes
Protective Nets
Supercraft Mallet
Mallet Inserts
Taper and Cylinder Cleaner

Lubricants page 1153–1166
Adhesives

95000

Conveyor and Movement Technology



Apparatuses Swivel and Fixed Castors

standard version



Material:
Housing in sheet steel;
wheels in standard solid rubber tyre, rim in polyamide

Surface finish:
Pressed housing; swivel castor housing with double ball bearing in the swivel head; wheels with slide bearing

Sample order:
nlm 95010-07525

Note:
Wheel axle screwed. Swivel and fixed castor with bolt hole. Wheels grey, non-marking.

wheel and swivel head brake „stop-fix“



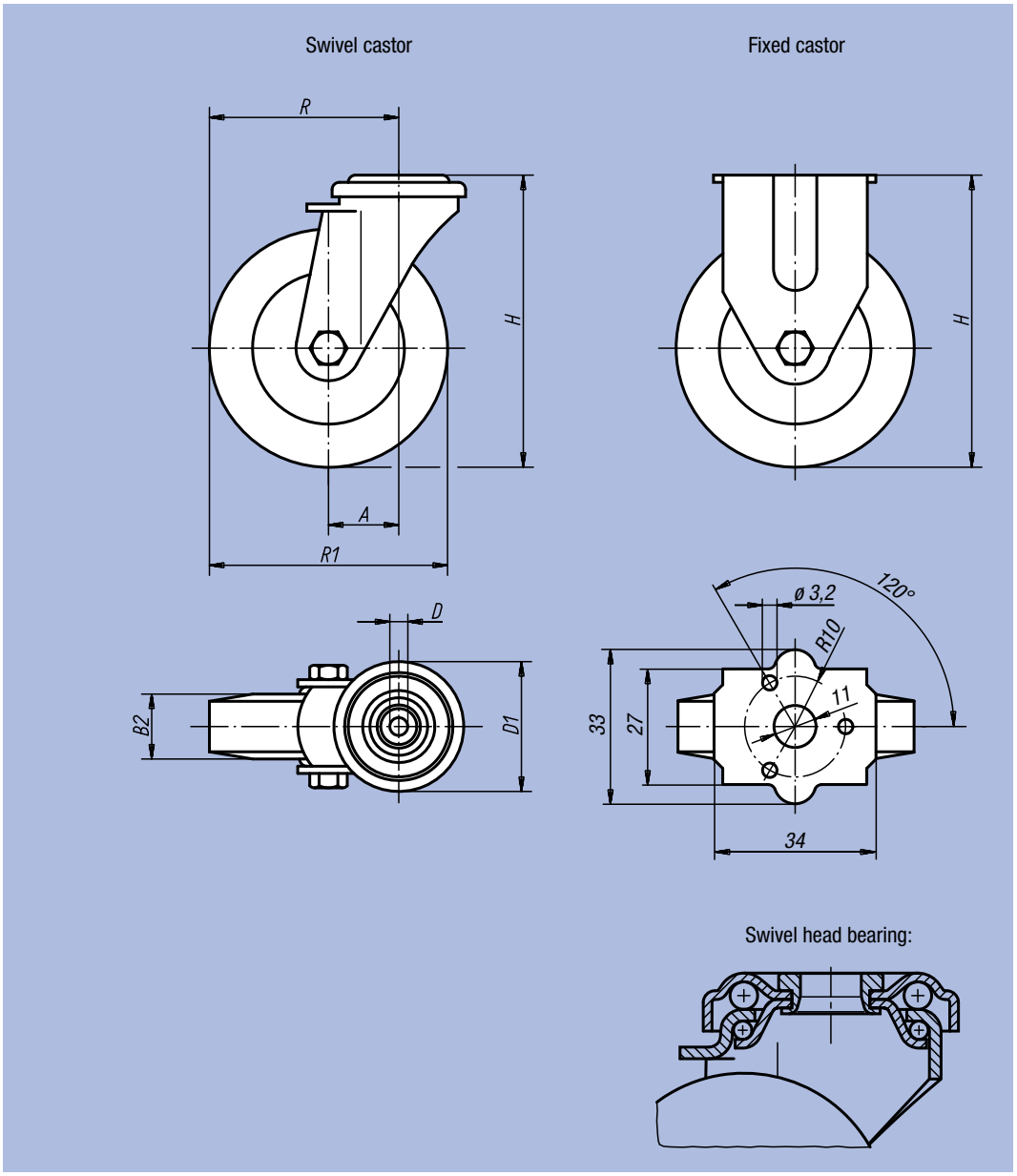

Order No. Surface finish swivel castor	Order No. Surface finish fixed castor	Order No. Surface finish swivel castor with „stop-fix“	Wheel bearing	A	B2	D	D1	H	R	R1	Permissible load kg
95010-05018	95010-050181	95010-050182	slide bearing	25	18	11	43	69	50	50	40
95010-07525	95010-075251	95010-075252	slide bearing	28	25	11	43	98	65,5	75	60
95010-10025	-	95010-100252	slide bearing	33	25	11	43	121	83	100	70

Sheet steel Swivel and Fixed Castors

heavy-duty model



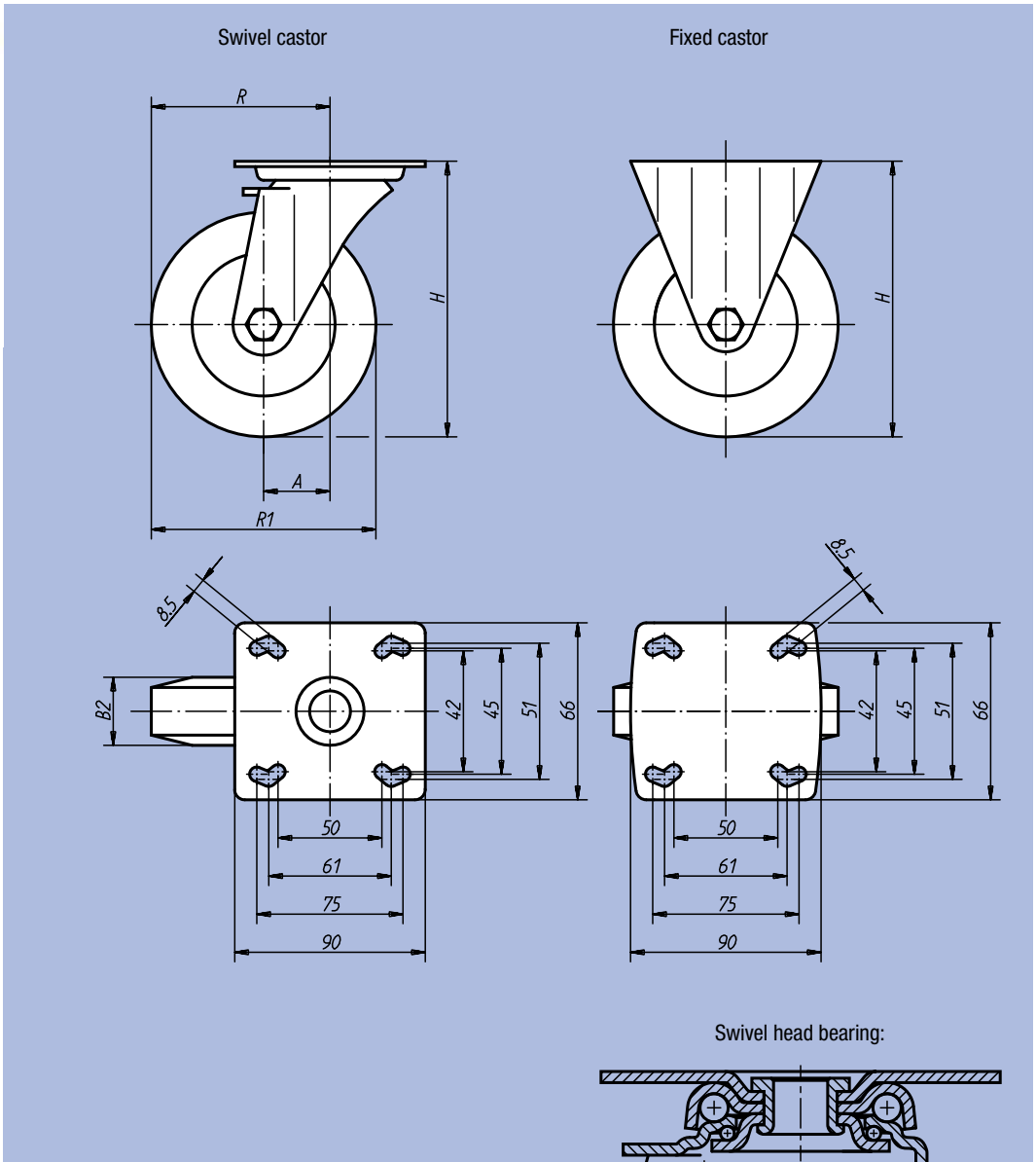

Material:
Housing in sheet steel;
wheels in standard solid rubber tyre, rim in polyamide

Surface finish:
Pressed housing;
swivel castor housing with double ball bearing in the swivel head;
wheels with slide bearing

Sample order:
nlm 95012-10032

Note:
Wheel axle screwed. Standard Solid Rubber Tyres are shock-, impact- and corrosion resistant.

wheel and swivel head brake „stop-fix“



Order No. Surface finish swivel castor	Order No. Surface finish fixed castor	Order No. Surface finish swivel castor with „stop-fix“	Wheel bearing	A	B2	H	R	R1	Permissible load kg
95012-08025	95012-080251	95012-080252	slide bearing	40	25	111	80	80	60
95012-10032	95012-100321	95012-100322	slide bearing	40	32	136	90	100	90
95012-12525	95012-125251	95012-125252	slide bearing	40	25	161	102,5	125	80
95012-12532	95012-125321	95012-125322	slide bearing	40	32	161	102,5	125	100

Standard sheet steel Castors



Material:
Housing and rim in sheet steel;
wheels with solid rubber tyre;
hub in steel tube

Surface finish:
Pressed housing and rim;
swivel castor housing with double ball bearing in the swivel head and ball protection;
wheels with ball bearing

Sample order:
nlm 95016-10030

Note:
Wheel axle screwed.

wheel and swivel head brake „stop-fix“



Swivel castor

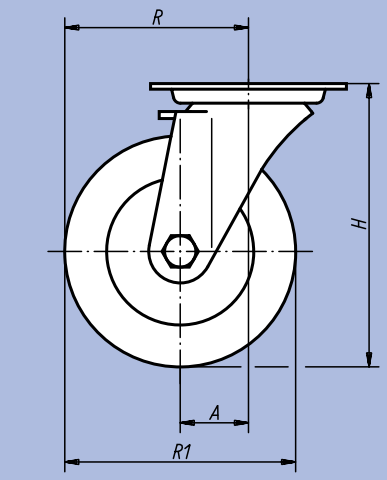

Fixed castor

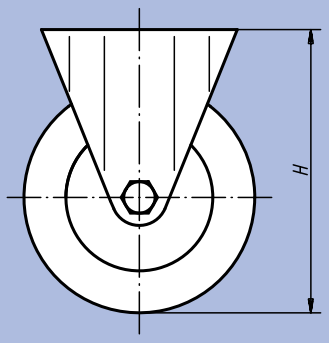

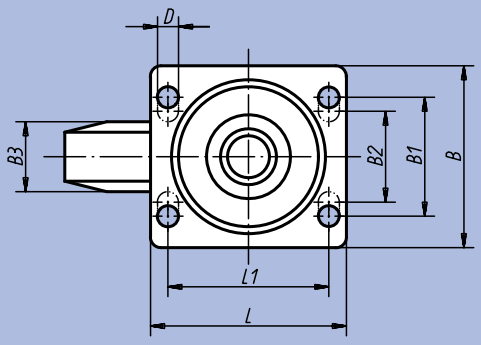

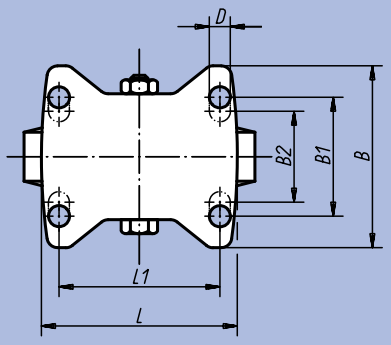

Swivel head bearing:

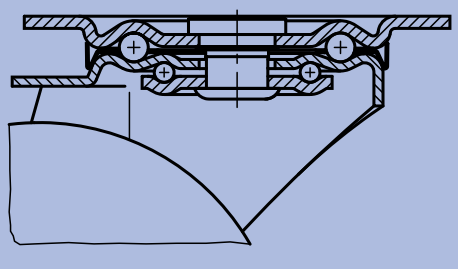

Order No. Surface finish swivel castor	Order No. Surface finish fixed castor	Order No. Surface finish swivel castor with „stop-fix“	Wheel bearing	A	B	B1	B2	B3	L	L1	H	D	R	R1	Permissible load kg
95016-08025	95016-080251	95016-080252	roller bearing	38	85	60	-	25	100	80	102	9	78	80	50
95016-10030	95016-100301	95016-100302	roller bearing	36	85	60	-	30	100	80	125	9	86	100	70
95016-12538	95016-125381	95016-125382	roller bearing	40	85	60	-	37,5	100	80	150	9	102,5	125	100
95016-16040	95016-160401	95016-160402	roller bearing	60	110	80	75	40	140	105	195	11	140	160	135
95016-20050	95016-200501	95016-200502	roller bearing	65	110	80	75	50	140	105	235	11	165	200	205

Sheet steel Swivel and Fixed Castors

standard version



Material:
Housing in sheet steel;
wheel body in PA 6 with vulcanised elastic solid rubber tyre

Surface finish:
Pressed housing;
swivel castor housing with double ball bearing in the swivel head and ball protection;
wheels with ball bearing

Sample order:
nlm 95018-12537

Note:
Wheel axle screwed. Wheels are shock- and impact-resistant.

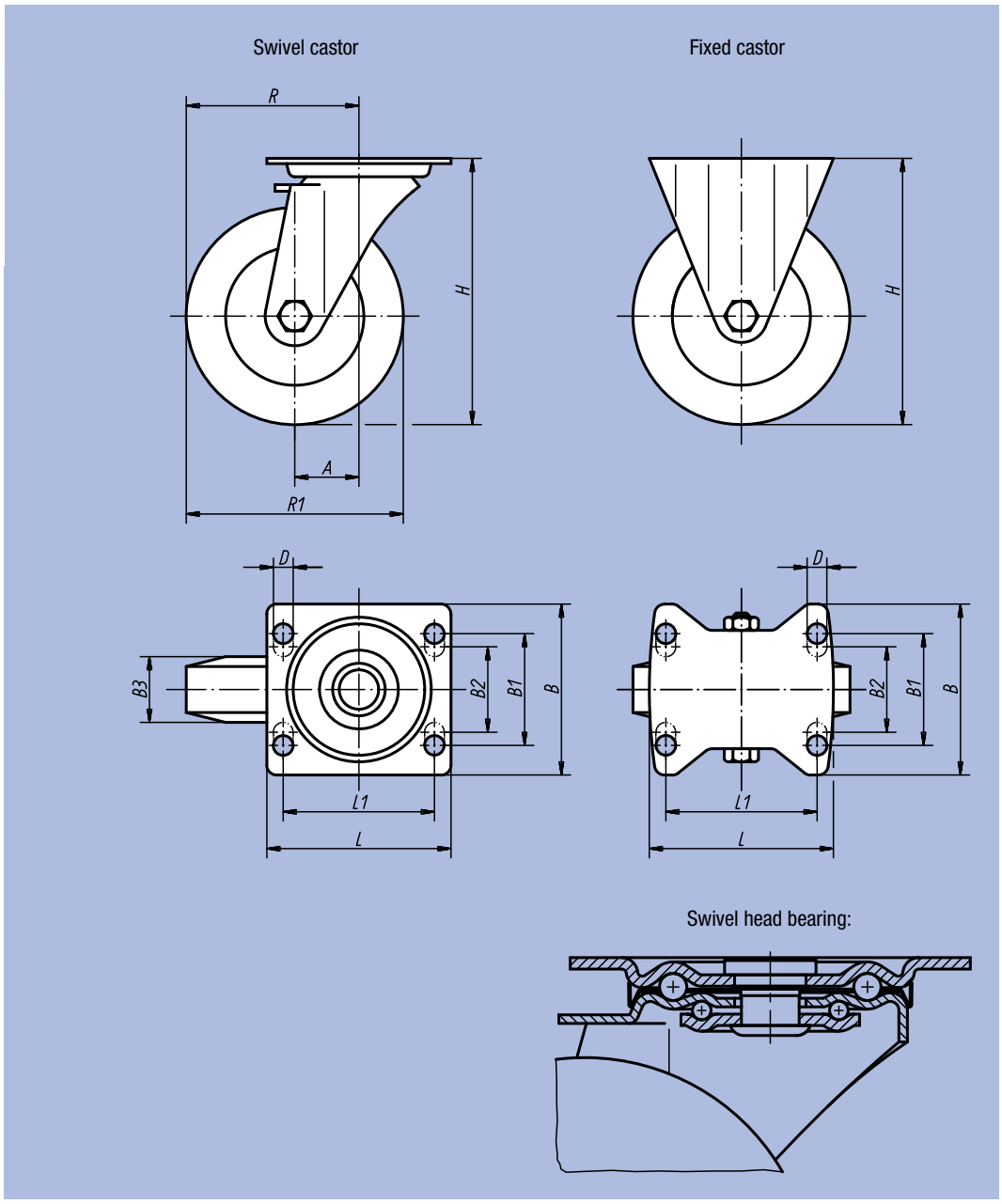

wheel and swivel head brake „stop-fix“



Order No. Surface finish swivel castor	Order No. Surface finish fixed castor	Order No. Surface finish swivel castor with „stop-fix“	Wheel bearing	A	B	B1	B2	B3	L	L1	H	D	R	R1	Permissible load kg
95018-10037	95018-100371	95018-100372	roller bearing	36	85	60	-	38	100	80	125	9	86	100	170
95018-12537	95018-125371	95018-125372	roller bearing	40	85	60	-	40	100	80	150	9	102,5	125	200
95018-16050	95018-160501	95018-160502	roller bearing	60	110	80	75	50	140	105	195	11	140	160	350
95018-20050	95018-200501	95018-200502	roller bearing	65	110	80	75	50	140	105	235	11	165	200	400

Sheet steel Swivel and Fixed Castors

heavy-duty model



Material:
Housing in strong sheet steel;
wheels with steel-wire reinforced elastic solid rubber tyre;
steel welded wheel body

Surface finish:
Pressed housing; reinforced fork, top plate and swivel head bolt;
swivel castor housing with double ball bearing in the swivel head and hardened bearing seats;
wheels with precision ball bearing

Sample order:
nlm 95020-12550

Note:
These castors and wheels are particularly insensitive against impact and shock loads and promise a high service life. Wheel axle screwed.

wheel and swivel head brake „stop-top“



Swivel castor

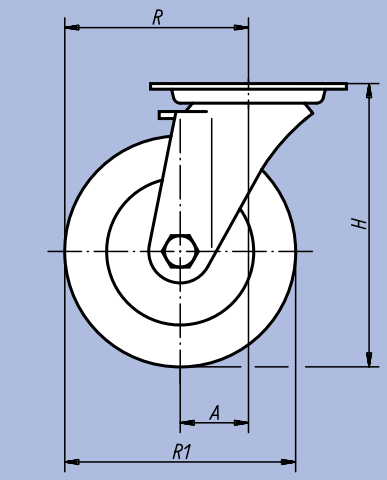

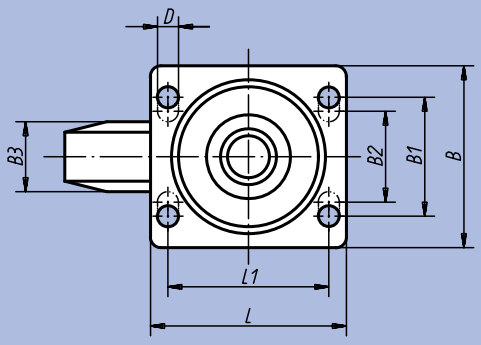

Fixed castor

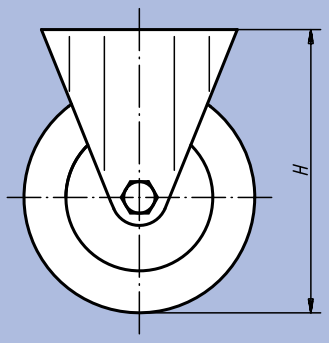

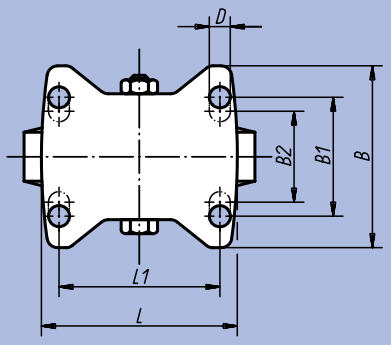

Swivel head bearing:

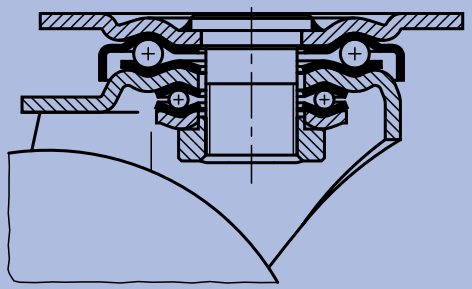

Order No. Surface finish swivel castor	Order No. Surface finish fixed castor	Order No. Surface finish swivel castor with „stop-top“	Wheel bearing	A	B	B1	B2	B3	L	L1	H	D	R	R1	Permissible load kg
95020-10040	95020-100401	95020-100402	ball bearing	45	85	60	-	40	100	80	140	9	95	100	180
95020-12550	95020-125501	95020-125502	ball bearing	55	110	80	75	50	140	105	170	11	117,5	125	280
95020-16050	95020-160501	95020-160502	ball bearing	65	110	80	75	50	140	105	202	11	145	160	400
95020-20050	95020-200501	95020-200502	ball bearing	70	110	80	75	50	140	105	245	11	170	200	500
95020-25060	95020-250601	95020-250602	ball bearing	82	110	80	75	60	140	105	295	11	207	250	700

Sheet steel Swivel and Fixed Castors

standard version



Material:
Housing in sheet steel;
wheel body in PA 6 with abrasion-resistant tread in polyurethane

Surface finish:
Pressed housing;
swivel castor housing with double ball bearing in the swivel head and ball protection;
wheels with slide bearing

Sample order:
nlm 95024-12535

Note:
The wheels are maintenance-free, fracture and corrosion resistant. Wheel axle screwed. Wheels non-marking.

wheel and swivel head brake „stop-fix“



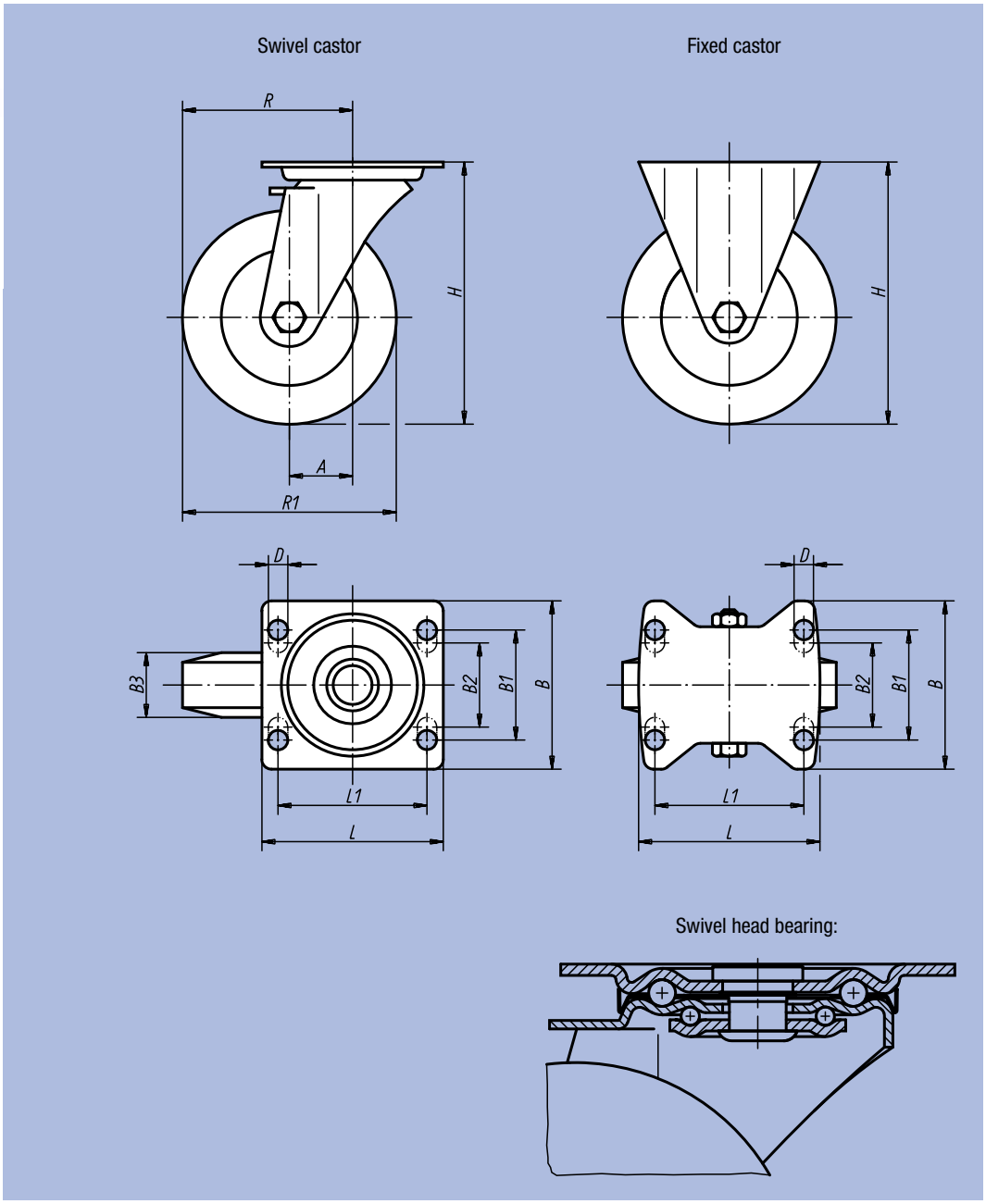

Order No. Surface finish swivel castor	Order No. Surface finish fixed castor	Order No. Surface finish swivel castor with „stop-fix“	Wheel bearing	A	B	B1	B2	B3	L	L1	H	D	R	R1	Permissible load kg
95024-10035	95024-100351	95024-100352	slide bearing	36	85	60	-	35	100	80	125	9	86	100	200
95024-12535	95024-125351	95024-125352	slide bearing	40	85	60	-	35	100	80	150	9	102,5	125	200
95024-15040	95024-150401	95024-150402	slide bearing	60	110	80	75	40	140	105	190	11	135	150	400
95024-20050	95024-200501	95024-200502	slide bearing	65	110	80	75	50	140	105	235	11	165	200	400

Sheet steel Swivel and Fixed Castors

medium duty model



Material:
Housing in sheet steel;
wheel body in die cast aluminium;
with tread in Extrathane

Surface finish:
Pressed housing;
swivel castor housing with double ball bearing in the swivel head and ball protection;
wheels with precision ball bearing

Sample order:
nlm 95028-12540

Note:
The wheels are corrosion resistant and they have a low rolling resistance.
Wheel axle screwed.

wheel and swivel head brake „stop-top“



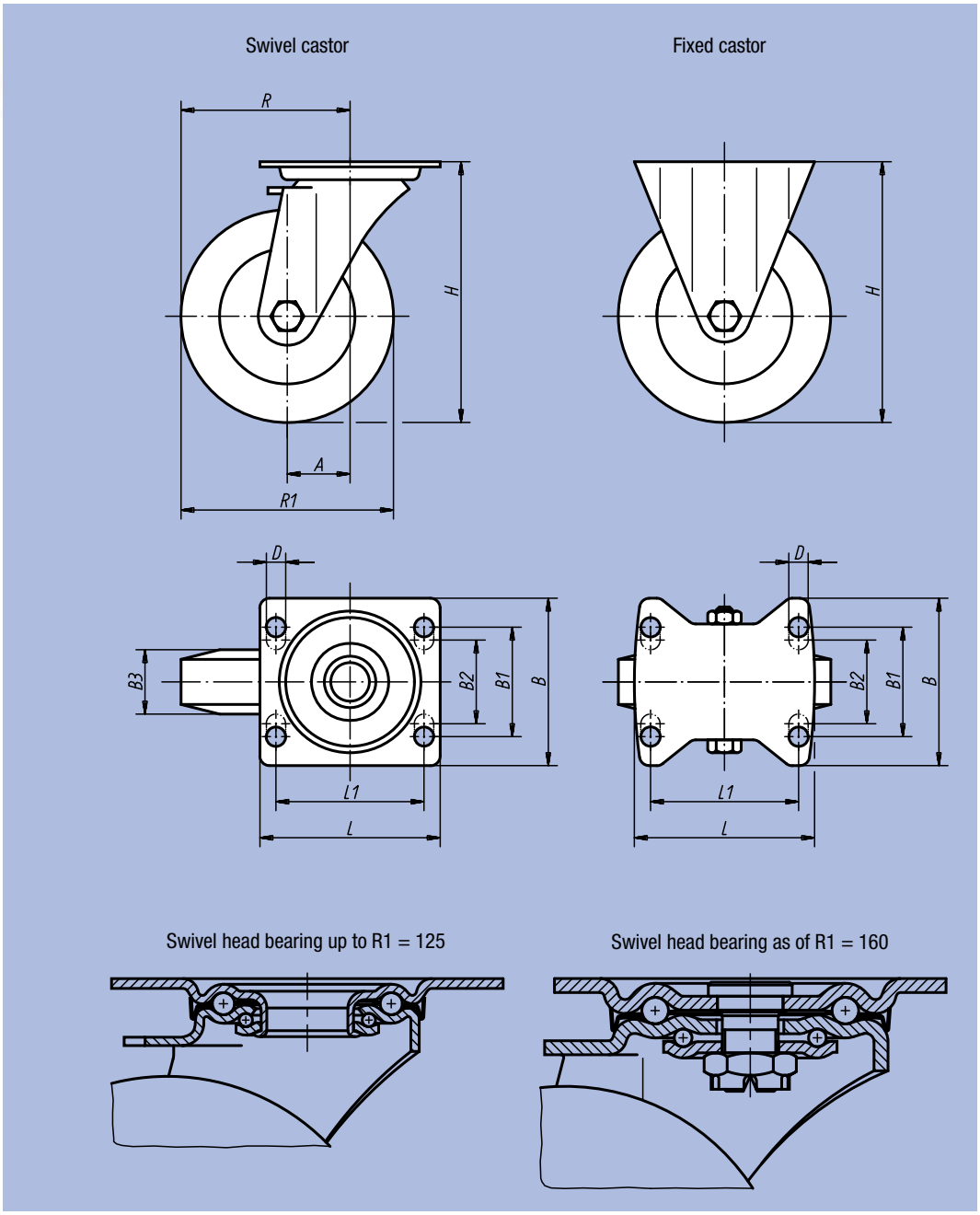

Order No. Surface finish swivel castor	Order No. Surface finish fixed castor	Order No. Surface finish swivel castor with „stop-top“	Wheel bearing	A	B	B1	B2	B3	L	L1	H	D	R	R1	Permissible load kg
95028-10040	95028-100401	95028-100402	ball bearing	45	85	60	-	40	100	80	130	9	95	100	250
95028-12540	95028-125401	95028-125402	ball bearing	48	85	60	-	40	100	80	155	9	110,5	125	250
95028-16050	95028-160501	95028-160502	ball bearing	63	110	80	75	50	140	105	202	11	143	160	550
95028-20050	95028-200501	95028-200502	ball bearing	70	110	80	75	50	140	105	245	11	170	200	800

Sheet steel Swivel and Fixed Castors

heavy-duty model



Material:
Housing in strong sheet steel;
wheels with steel welded wheel body and tread in Extrathane

Surface finish:
Pressed housing;
swivel castor housing with heavy fork and top plate, screwed and secured with a very robust swivel head bolt; additionally reinforced swivel head by special shaped and hardened bearing seats

Sample order:
nlm 95030-16050

Note:
These castors and wheels are particularly insensitive against shock and impact loads. They are characterised by their abrasion-resistance, elasticity and low-noise rolling performance. Wheel axle screwed.

wheel and swivel head brake „stop-top“



Swivel castor

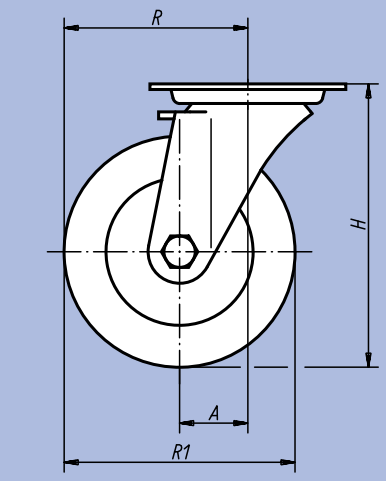

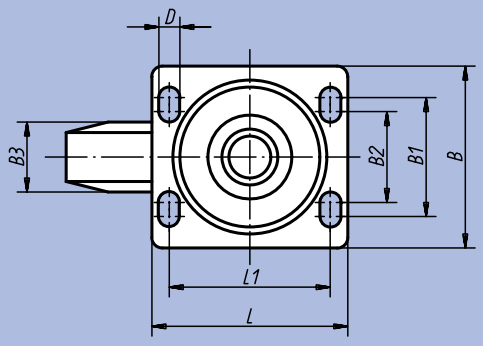

Fixed castor

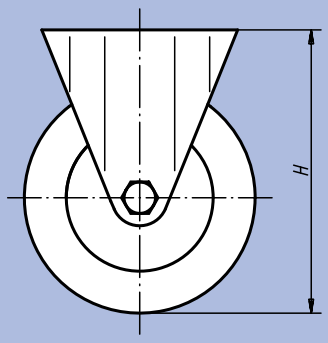

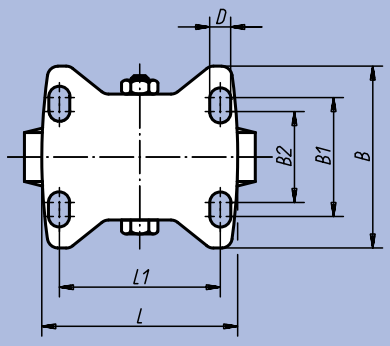

Swivel head bearing:

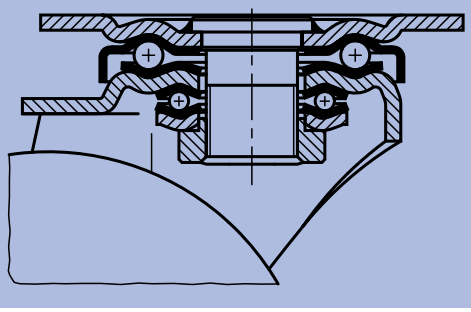

Order No. Surface finish swivel castor	Order No. Surface finish fixed castor	Order No. Surface finish swivel castor with „stop-top“	Wheel bearing	A	B	B1	B2	B3	L	L1	H	D	R	R1	Permissible load kg
95030-12550	95030-125501	95030-125502	ball bearing	55	110	80	75	50	140	105	170	11	117,5	125	500
95030-16050	95030-160501	95030-160502	ball bearing	65	110	80	75	50	140	105	202	11	145	160	700
95030-20050	95030-200501	95030-200502	ball bearing	70	110	80	75	50	140	105	245	11	170	200	900

Steel welded Swivel and Fixed Castors

heavy-duty model



Material:
Housing in solid welded steel construction;
wheels with steel welded wheel body and tread in Extrathane

Surface finish:
The housing is a rugged welded steel construction;
swivel castor housing with axial grooved ball bearing DIN 711 and taper roller bearing DIN 720 in the swivel head; dust and splash-proof; with grease nipple; wheels with precision ball bearing

Sample order:
nlm 95032-20050

Note:
Swivel head bolt welded on, screwed and secured. Wheel axle screwed.

wheel and swivel head brake „stop-top“



Swivel castor

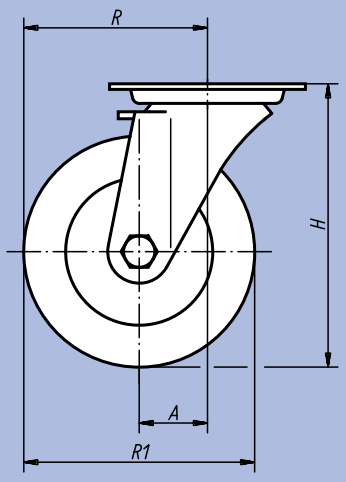

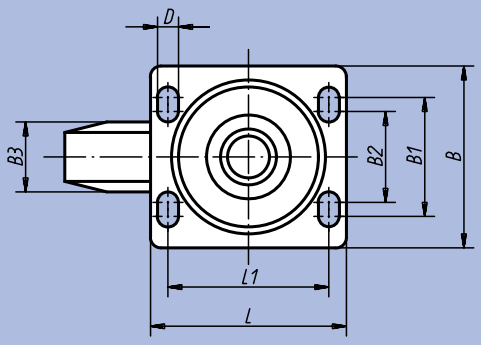

Fixed castor

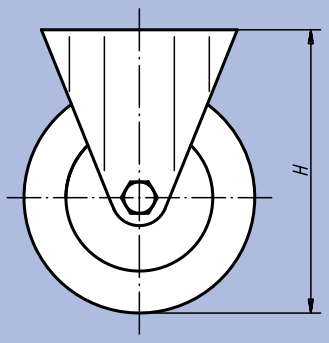

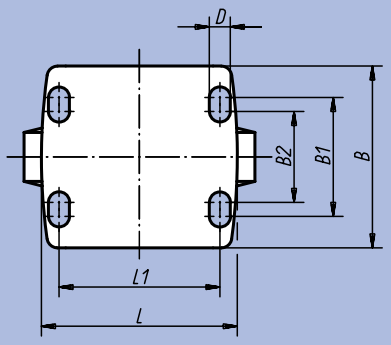

Swivel head bearing:

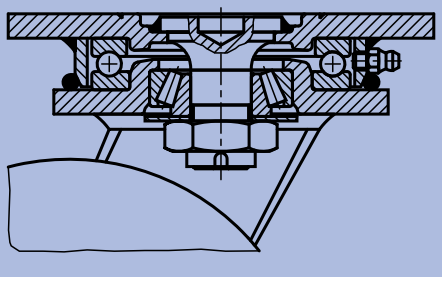

Order No. Surface finish swivel castor	Order No. Surface finish fixed castor	Order No. Surface finish swivel castor with „stop-top“	Wheel bearing	A	B	B1	B2	B3	L	L1	H	D	R	R1	Permissible load kg
95032-16050	95032-160501	95032-160502	ball bearing	55	110	80	75	50	140	105	205	11	135	160	700
95032-20050	95032-200501	95032-200502	ball bearing	60	110	80	75	50	140	105	245	11	160	200	1000
95032-25060	95032-250601	95032-250602	ball bearing	75	140	105	-	60	175	140	305	14	200	250	1350

Sheet steel Swivel and Fixed Castors

standard version



Material:
Housing in sheet steel;
wheels in PA 6

Surface finish:
Pressed housing;
swivel castor housing with double ball bearing in the swivel head and ball protection;
wheels with slide bearing

Sample order:
nlm 95034-10037

Note:
Wheels in PA 6 have a low rolling resistance. They are characterised by their corrosion- and abrasion-resistance and particularly shock- and impact-resistant.

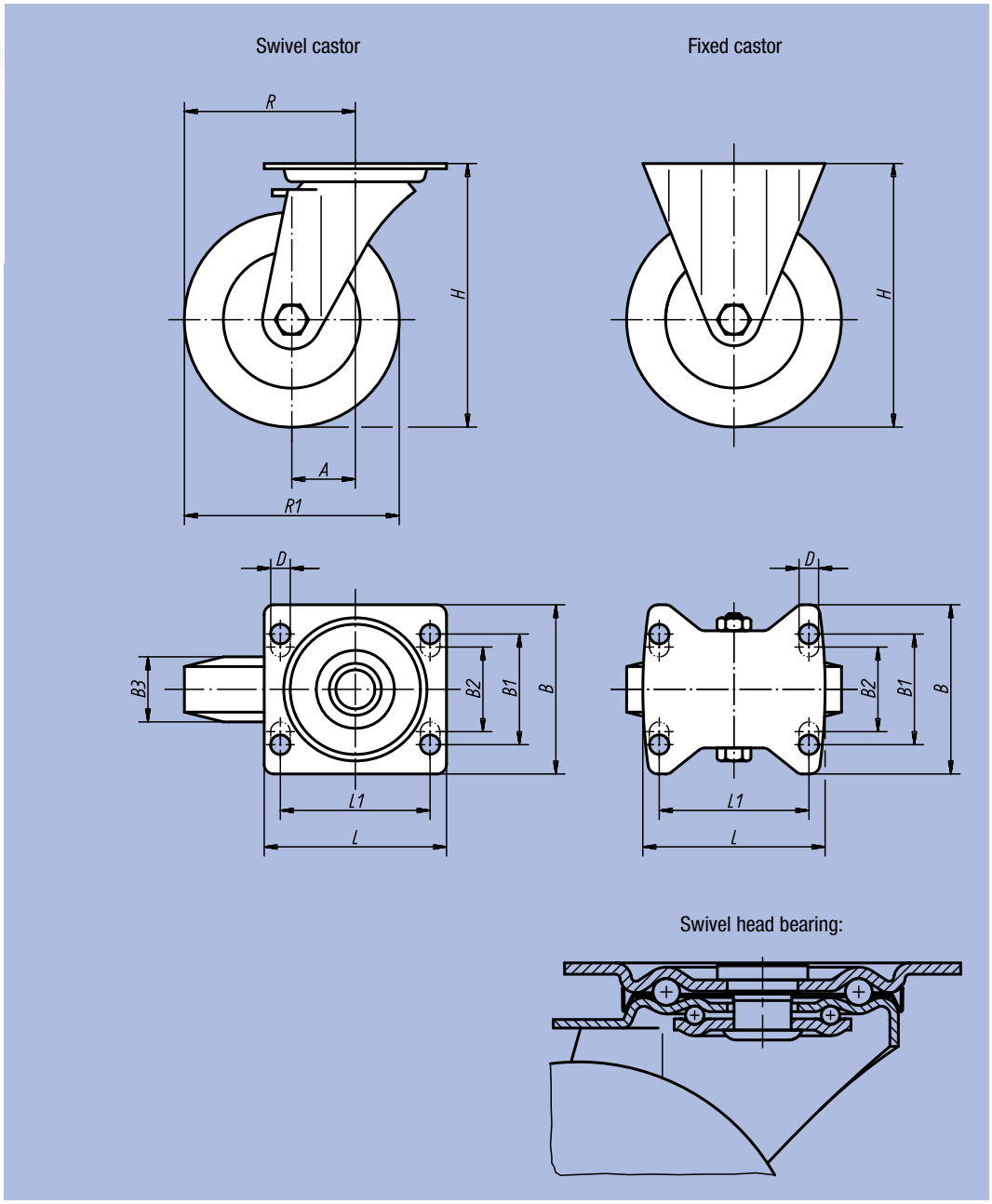

wheel and swivel head brake „stop-fix“



Order No. Surface finish swivel castor	Order No. Surface finish fixed castor	Order No. Surface finish swivel castor with „stop-fix“	Wheel bearing	A	B	B1	B2	B3	L	L1	H	D	R	R1	Permissible load kg
95034-07532	95034-075321	95034-075322	slide bearing	35	85	60	-	32	100	80	98	9	72,5	75	200
95034-10037	95034-100371	95034-100372	slide bearing	35	85	60	-	37	100	80	125	9	85	100	200
95034-12540	95034-125401	95034-125402	slide bearing	40	85	60	-	40	100	80	150	9	102,5	125	200
95034-15050	95034-150501	95034-150502	slide bearing	60	110	80	75	50	140	105	190	11	135	150	400

Sheet steel Swivel and Fixed Castors

heavy-duty model



Material:
Housing in strong sheet steel;
wheels in PA 6

Surface finish:
Pressed housing;
swivel castor housing with heavy fork and top plate, screwed and secured with a very rugged swivel head bolt; additionally reinforced swivel head by special shaped and hardened bearing seats;
wheels with slide bearing

Sample order:
nlm 95036-12540

Note:
Wheel axle screwed. The wheels are particularly shock and impact resistant and have a high abrasion-resistance.

wheel and swivel head brake „stop-top“



Swivel castor

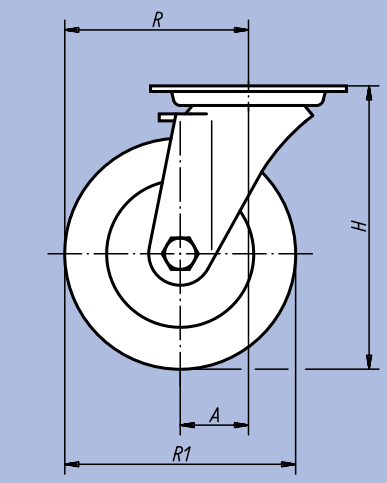

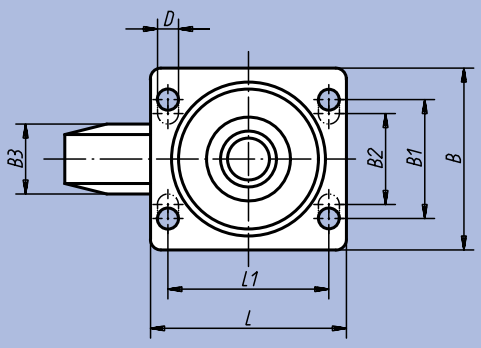

Fixed castor

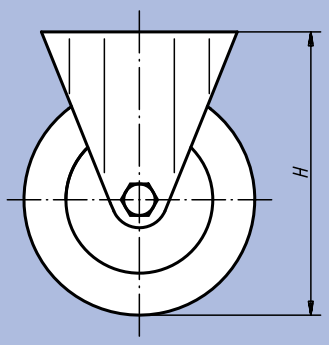

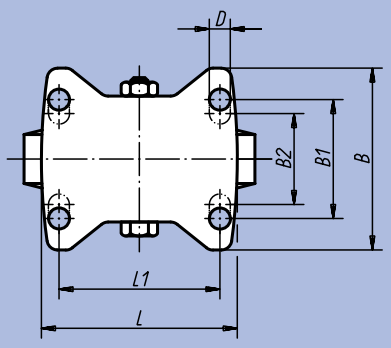

Swivel head bearing:

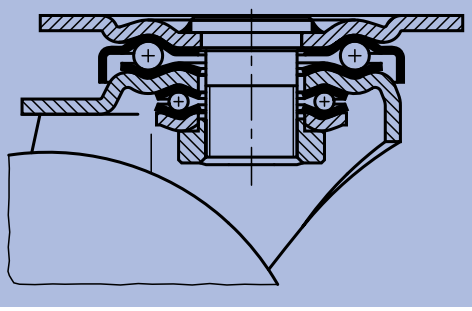

Order No. Surface finish swivel castor	Order No. Surface finish fixed castor	Order No. Surface finish swivel castor with „stop-top“	Wheel bearing	A	B	B1	B2	B3	L	L1	H	D	R	R1	Permissible load kg
95036-10037	95036-100371	95036-100372	slide bearing	45	85	60	-	37	100	80	140	9	95	100	280
95036-12540	95036-125401	95036-125402	slide bearing	45	85	60	-	40	100	80	165	9	107,5	125	300
95036-15050	95036-150501	95036-150502	slide bearing	65	110	80	75	50	140	105	197	11	140	150	400
95036-20050	95036-200501	95036-200502	slide bearing	70	110	80	75	50	140	105	245	11	170	200	600

Sheet steel Swivel and Fixed Castors

heavy-duty model



Material:
Housing in strong sheet steel;
wheels in high-quality PA 6

Surface finish:
Pressed housing;
swivel castor housing with heavy fork and top plate, screwed and secured with a very robust swivel head bolt; additionally reinforced swivel head by special shaped and hardened bearing seats

Sample order:
nlm 95040-10037

Note:
Due to the hardened bearing-seats the castors are particularly shock- and impact-resistant. The wheels are high abrasion-resistant. Wheel axle screwed.

wheel and swivel head brake „stop-top“



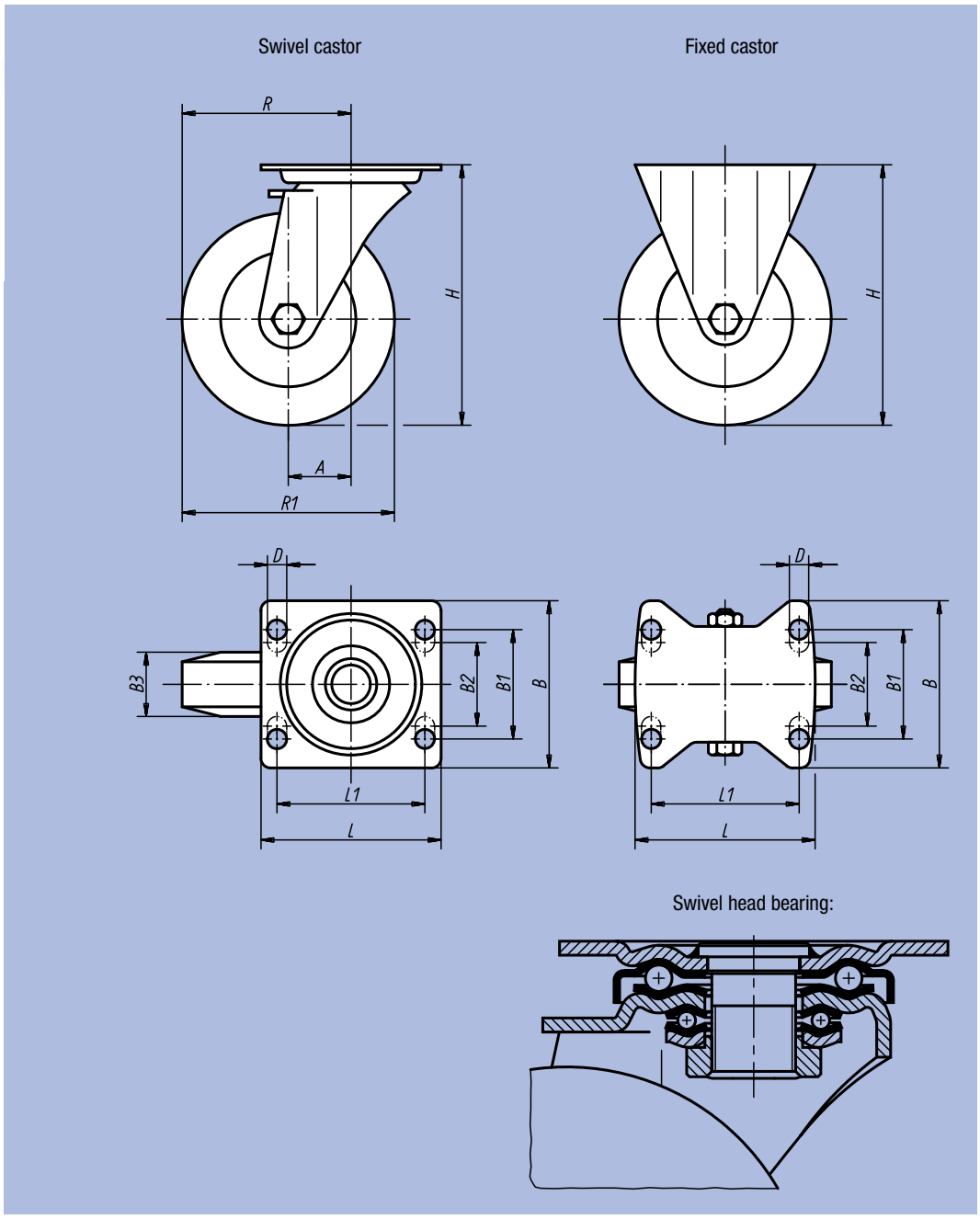

Order No. Surface finish swivel castor	Order No. Surface finish fixed castor	Order No. Surface finish swivel castor with „stop-top“	Wheel bearing	A	B	B1	B2	B3	L	L1	H	D	R	R1	Permissible load kg
95040-07532	95040-075321	95040-075322	slide bearing	45	85	60	-	32	100	80	118	9	82,5	75	300
95040-075323	95040-075324	95040-075325	ball bearing	45	85	60	-	32	100	80	118	9	82,5	75	300
95040-10037	95040-100371	95040-100372	slide bearing	45	85	60	-	37	100	80	140	9	95	100	500
95040-100373	95040-100374	95040-100375	ball bearing	45	85	60	-	37	100	80	140	9	95	100	500
95040-12540	95040-125401	95040-125402	slide bearing	45	85	60	-	40	100	80	165	9	107,5	125	700
95040-125403	95040-125404	95040-125405	ball bearing	45	85	60	-	40	100	80	165	9	107,5	125	700
95040-15050	95040-150501	95040-150502	slide bearing	65	110	80	75	50	140	105	197	11	140	150	800
95040-150503	95040-150504	95040-150505	ball bearing	65	110	80	75	50	140	105	197	11	140	150	800

Standard Solid Rubber Tyres

on pressed steel rim



Material:
Rim in sheet steel;
wheel standard solid rubber tyre

Surface finish:
Rim galvanized and chromated;
black tyre

Sample order:
nlm 95050-14038

Note:
This special rim design is extremly storng, even under extreme shock and impact loads. Low rolling resistance.
Temperature resistant from -30 °C to +80 °C.
Wheels are suitable for 95016.

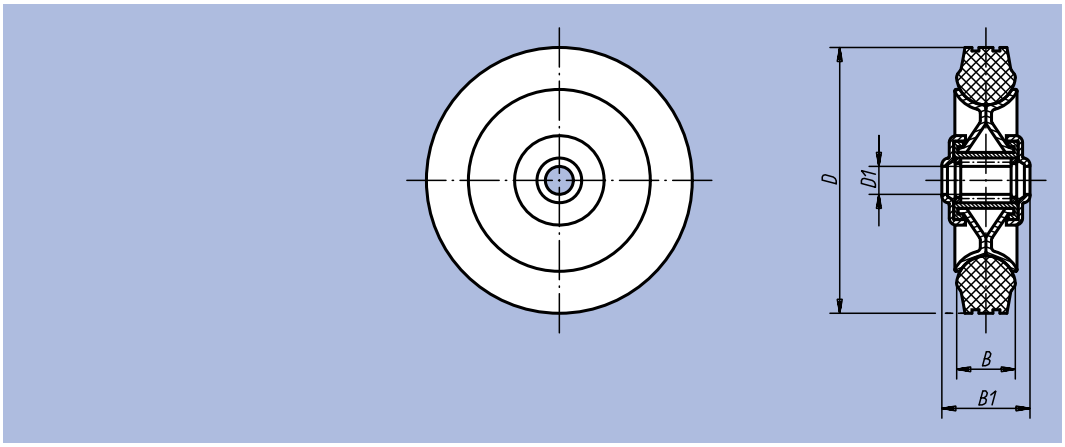

Order No.	Wheel bearing	B	B1	D	D1	Permissible load kg	kg
95050-08025	roller bearing	25	35	80	12	50	0,200
95050-10030	roller bearing	30	45	100	15	70	0,400
95050-12538	roller bearing	37,5	45	125	15	100	0,700
95050-14038	roller bearing	37,5	45	140	15	115	0,800
95050-16040	roller bearing	40	60	160	20	135	1,200
95050-18050	roller bearing	50	60	180	20	170	1,700
95050-20050	roller bearing	50	60	200	20	205	2,100

Elastic Solid Rubber Tyre



Material:
Wheel body in die cast aluminium;
tyre in elastic solid rubber

Sample order:
nlm 95053-200501

Note:
The tyre is vulcanised onto the rim.
Wheels with elastic solid rubber tyres have a high wear resistance, a low rolling resistance and an excellent operational comfort.
Application temperature from -30 °C to +80 °C.
Wheels are used for pallet trucks as front wheels.
Other sizes on request.

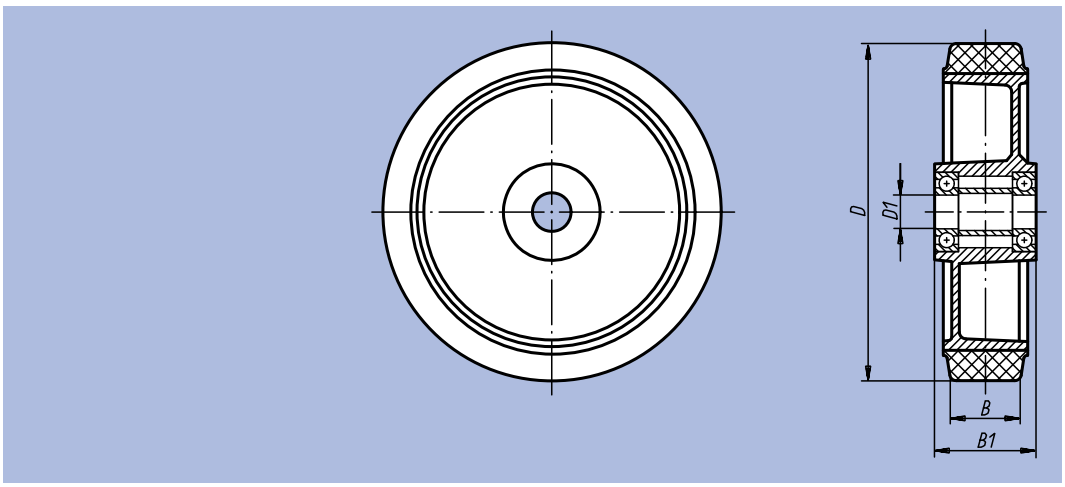

Order No.	Wheel bearing	B	B1	D	D1	Permissible load kg	kg
95053-200501	ball bearing	35	60	200	20	450	1,580

Nylon Wheels

with injection-moulded tread



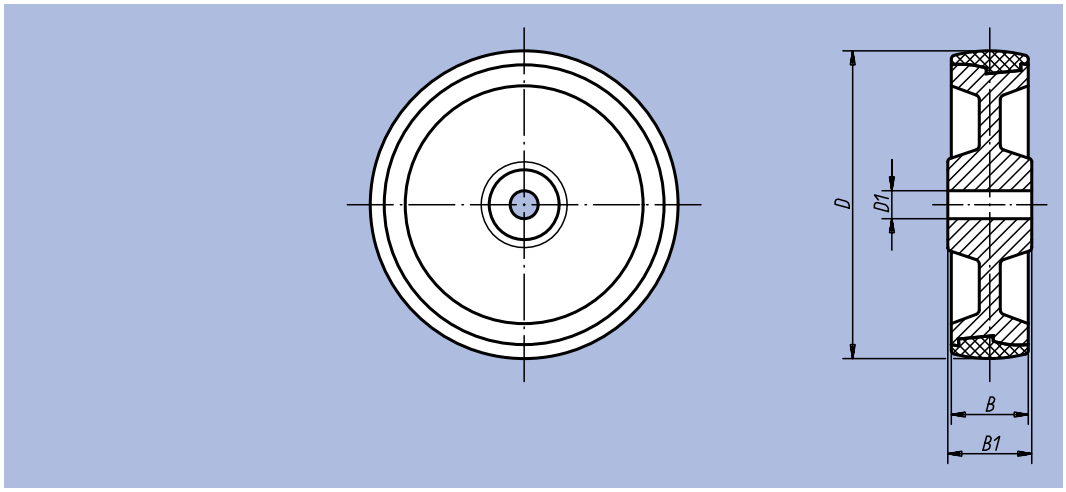

Material:
Wheel body PA;
tread in thermoplastic polyurethane-elastomer

Sample order:
nlm 95056-12535

Note:
Wheels with polyurethane tread are characterised by a high load capacity, abrasion-resistance, floor-saving, shock and vibration absorption. They are robust and resistant against lots of chemicals and acids.
Temperature resistant from -30 °C to +80 °C.
Wheels are suitable for 95024.

Order No.	Wheel bearing	B	B1	D	D1	Permissible load kg	kg
95056-10035	slide bearing	35	45	100	15	200	0,200
95056-12535	slide bearing	35	45	125	15	250	0,300
95056-15040	slide bearing	40	60	150	20	400	0,500
95056-20050	slide bearing	50	60	200	20	700	1,100

Guide Rollers



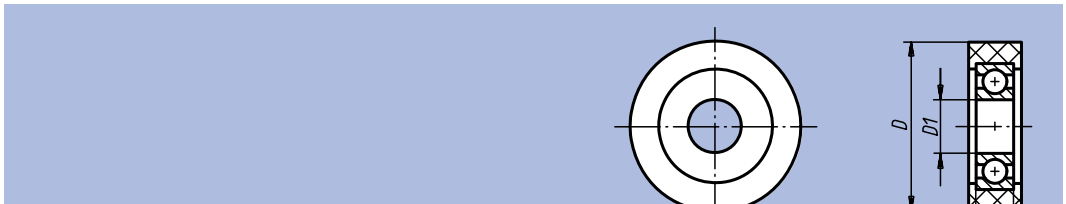

Material:
Tread in Extrathane, hardness 92° shore A

Sample order:
nlm 95057-05015

Note:
The tread is firmly bonded onto a ball bearing. These wheels are characterised by particularly high rebound resilience with long endurance times as well as high cut and tear propagation resistance. They are also abrasion-resistant, non-staining, floor-saving, elastic and have a low-noise rolling performance as well as a low rolling resistance.
Application area: conveyer belts, doors, etc. Other sizes on request.

Order No.	Wheel bearing	B	B1	D	D1	Permissible load kg	kg
95057-03008	ball bearing	8	6	30	6	15	0,010
95057-03514	ball bearing	14	8	35	12	30	0,030
95057-04020	ball bearing	20	9	40	10	35	0,050
95057-05015	ball bearing	15	9	50	10	45	0,050
95057-06020	ball bearing	20	12	60	17	70	0,110
95057-07020	ball bearing	20	15	70	25	95	0,172

Aluminium Wheels

with injection-moulded tread



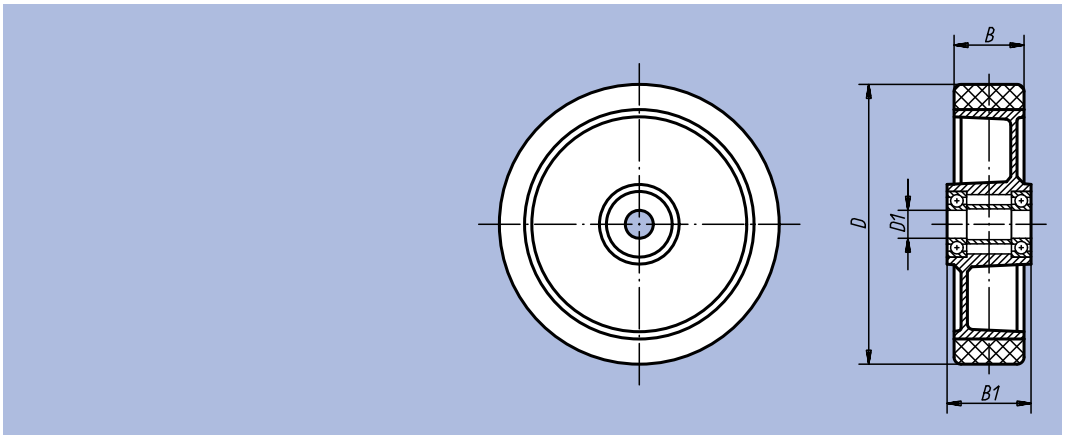

Material:
Wheel body in die cast aluminium; tread in Extrathane

Sample order:
nlm 95058-12540

Note:
These wheels are elastic, abrasion-resistant, floor-saving and have a low-noise rolling performance as well as a low rolling resistance.
Wheels are suitable for 95028.

Order No.	Wheel bearing	B	B1	D	D1	Permissible load kg	kg
95058-10040	ball bearing	40	45	100	15	250	0,500
95058-12540	ball bearing	40	45	125	15	350	0,600
95058-16050	ball bearing	50	60	160	20	550	1,100
95058-18050	ball bearing	50	60	180	20	600	1,430
95058-20050	ball bearing	50	60	200	20	800	1,500

Heavy-Duty Castors



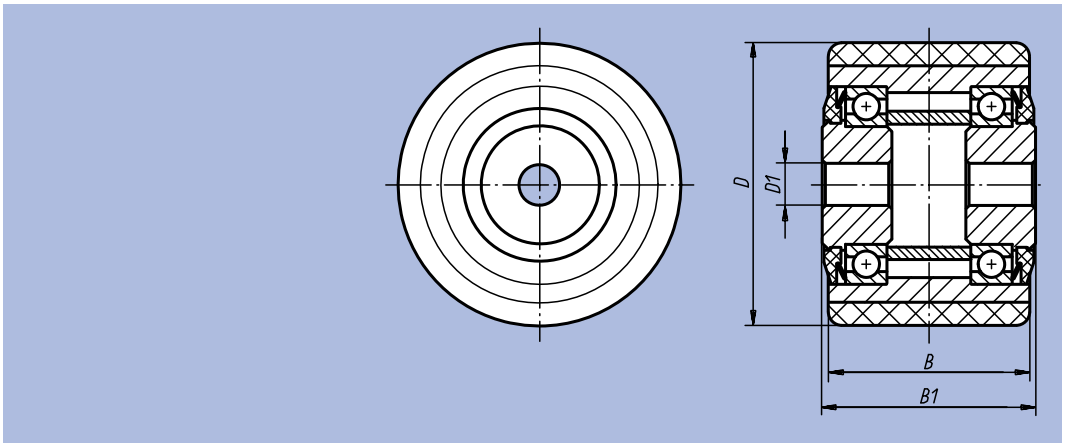

Material:
Wheel body in steel tube, with ball bearing; tread in Extrathane, hardness 92° shore A.

Sample order:
nlm 95059-0857520

Note:
Optimum ball bearing protection against splash water. The tread is firmly bonded. These wheels are characterised by particularly high rebound resilience with long endurance times as well as high cut and tear propagation resistance. They are also abrasion-resistant, non-staining, floor-saving, elastic and have a low-noise rolling performance as well as a low rolling resistance.
Application area: pallet trucks, forklift, etc. Other sizes on request.

Order No.	Wheel bearing	B	B1	D	D1	Permissible load kg	kg
95059-0856020	ball bearing	60	65	85	20	450	1,040
95059-0856025	ball bearing	60	65	85	25	450	0,980
95059-0857520	ball bearing	75	80	85	20	570	1,300
95059-0857525	ball bearing	75	80	85	25	570	1,280
95059-0859525	ball bearing	95	100	85	25	720	1,630

Heavy-Duty Wheels

wheel body welded



Material:
Wheel body welded steel construction; tread in Extrathane

Sample order:
nlm 95060-16050

Note:
The tread made of Extrathane polyurethane is characterised by particularly high rebound resilience with long endurance times, low-noise rolling performance, elastic, floor-saving and abrasion-resistance. The wheel is fitted with a grease nipple for bearing maintenance.
Application temperature from -40 °C to +80 °C.
Wheels are suitable for 95030 and 95032.

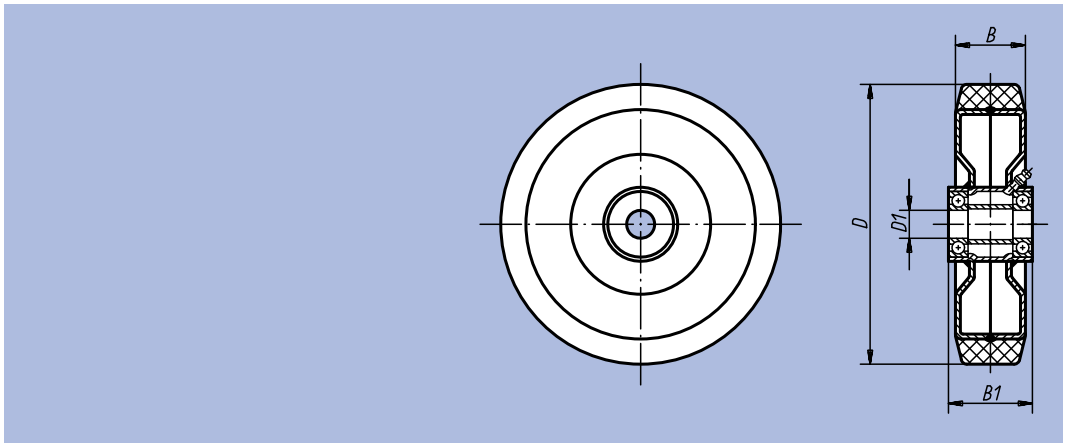

Order No.	Wheel bearing	B	B1	D	D1	Permissible load kg	kg
95060-12550	ball bearing	50	60	125	20	500	1,300
95060-16050	ball bearing	50	60	160	20	700	1,800
95060-20050	ball bearing	50	60	200	20	1000	2,400
95060-25060	ball bearing	60	70	250	25	1350	4,110

Nylon Wheels



Material:
Polyamide

Sample order:
nlm 95062-12540

Note:
Wheels in polyamide are fracture and corrosion resistant, shock- and impact-resistant and chemical resistant. Furthermore they are high abrasion-resistant and have a low rolling resistance.
Other sizes with ball bearing on request.

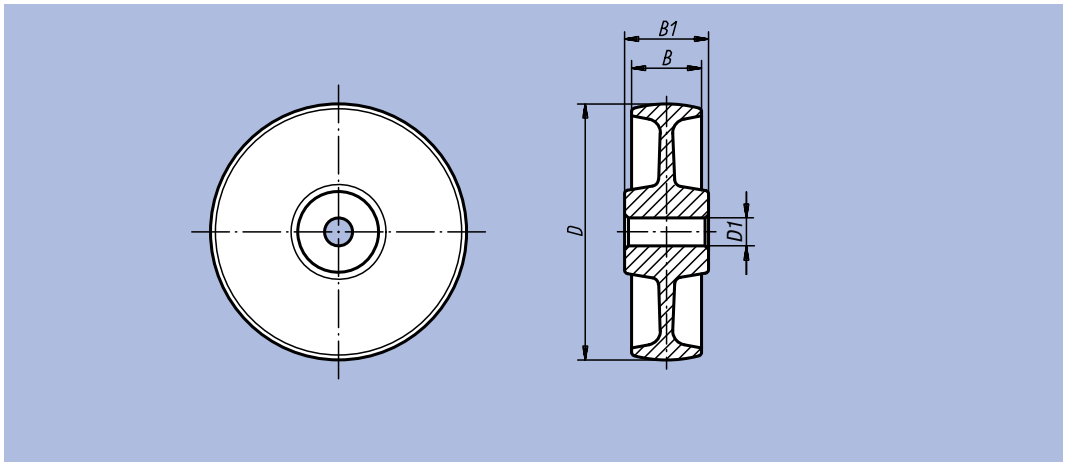

Order No.	Wheel bearing	B	B1	D	D1	Permissible load kg	kg
95062-07532	slide bearing	32	35	75	12	200	0,100
95062-10037	slide bearing	37	45	100	15	280	0,200
95062-12540	slide bearing	40	45	125	15	300	0,200
95062-15050	slide bearing	50	60	150	20	400	0,400
95062-20050	slide bearing	50	60	200	20	600	0,720

Nylon Wheels

heavy-duty model



Material:
Polyamide

Sample order:
nlm 95064-10037

Note:
Wheels in polyamide are fracture and corrosion resistant, shock- and impact-resistant and chemical resistant. Furthermore they are high abrasion-resistant and have a low rolling resistance.
Wheels are suitable for 95040.

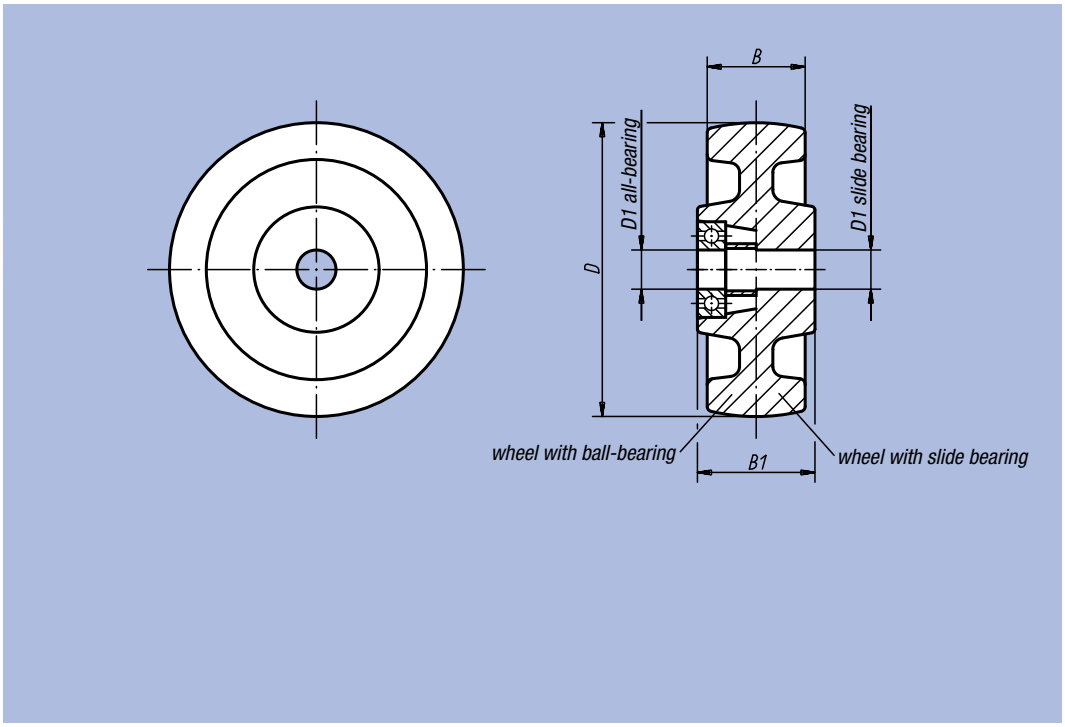

Order No.	Wheel bearing	B	B1	D	D1	Permissible load kg	kg
95064-07532	slide bearing	32	35	75	12	300	0,100
95064-10037	slide bearing	37	45	100	15	500	0,240
95064-12540	slide bearing	40	45	125	15	700	0,400
95064-15050	slide bearing	50	60	150	20	800	0,700
95064-20050	slide bearing	50	60	200	20	1500	1,300
95064-25065	slide bearing	65	65	250	25	2000	2,300
95064-075321	ball bearing	32	35	75	15	300	0,200
95064-100371	ball bearing	37	45	100	15	500	0,350
95064-125401	ball bearing	40	45	125	20	700	0,580
95064-150501	ball bearing	50	60	150	20	800	1,000
95064-200501	ball bearing	50	60	200	25	1500	1,800
95064-250651	ball bearing	65	65	250	25	2000	2,900

Notes:

Fitting tips and technical data for Ball Transfer Units

Bulky goods can be easily pushed, turned and steered by using ball transfer units. The have best proven their worth as components in conveyor systems, machining lathes and packaging machines.

Areas of use:

Conveyor technology
- ball stages, rotary tables and points in sorting and distribution plants
- crossing points in constant conveyors
- luggage sorting plants at airports
- transport of steel tubes
- lifting stages

General mechanical engineering
- feed tables for sheet-metal machining lathes
- jigs for press brakes
- feeder facilities for machining centres
- drill tables and motor-driven supporting tables
- assembly aids in large motor engineering

Other areas
- specialist mechanical engineering
- aeronautical engineering industry
- drinks and rock-processing industry

Ball transfer units have a steel housing with a bearingmounted, hardened ball cup. This serves as the track for a variety of smaller supporting balls. The supporting balls move with the rotation of the load ball on the ball cup.
Ball transfer units are designed so that precise rolling and loadcarrying is guaranteed in all fitting positions.
Ball transfer units are low maintenance and almost all variants are protected from dirt by an oilsoaked felt gasket.

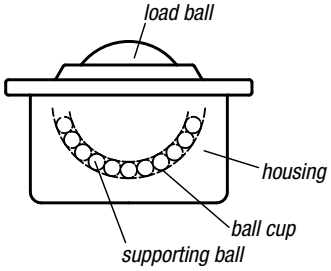

Calculating the ball transfer unit load
To calculate the load for a ball transfer unit, the weight of the transported goods is divided by 3. With proper balancing of the level of the load balls and dependent on the properties of the goods transported, the number of load-carrying ball transfer units can also be used.

Example:
Weight of the transported goods = 300 kg

Ball transfer unit load:

$$F = \frac{300\ kg}{3} = 100\ kg$$

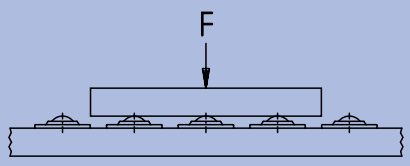

Arrangement of the ball transfer units
The arrangement of the ball transfer units is in line with the area of the goods transported. In the case of goods with a uniform, smooth area, such as the bases of chests for example, the distance between the ball transfer units is calculated from the length of the smallest edge divided by 2.5.

Example:
Base area of the transported goods = 500 x 1000 mm

Distance between the ball transfer units:

$$a = \frac{500\ mm}{2.5} = 200\ mm$$

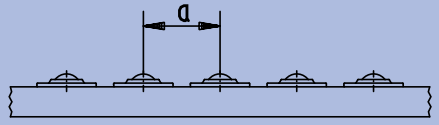

Transportation speed and load-carrying number
The permissible conveyor speed is 2 m/sec. The specified load-carrying numbers apply to all fitting positions and relate to 10^6 revs of the load ball. The temperature can be expected to rise and the useful life reduce with longer term use at speeds in excess of 1 m/sec, particularly in balls 60 to 90 in diameter.

Calculating the lifespan

$$L = \left(\frac{C}{F} \right)^3 \cdot 10^6\ revs$$

L = lifespan
C = load-carrying (N)
F = load (N)

Friction values
The diagram shows the friction values for ball transfer units dependent on load and speed. The guide values apply to all fitting positions when running on a hardened steel plate.

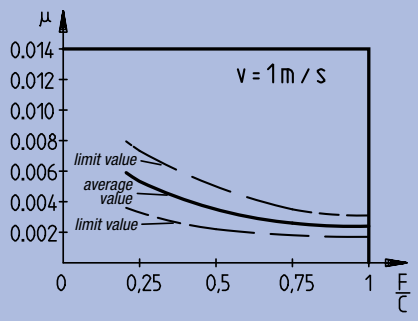

Attention:
Use high-temperature lubricant!
Follow the manufacturer's instructions!
The lubricating oil in situ may have to be washed out.

Temperature °C	Temperature factor f_T
125	0.9
150	0.8
175	0.7
200	0.5

Temperature resistance
In the case of ball transfer units with a felt gasket, the temperature resistance is 100 °C constant temperature.

Only non-galvanised ball transfer units having a steel load ball and no felt gasket can be used at temperatures in excess of 100 °C.
Pay attention to the reduction in load-carrying number!
Multiply the load-carrying number by the temperature factor (table).

Calculating the bearing load in spring-loaded ball transfer units
In these variants the determining factor for selecting the size is the values specified under the heading „Pre-clamping force". As part of this the weight of the transported goods is divided by the number of load-carrying ball transfer units.

Ball Transfer Units

with sheet steel housing



Form B: cap and housing galvanized
Form C: all parts galvanized,
balls in stainless steel
Form D: all parts in stainless steel

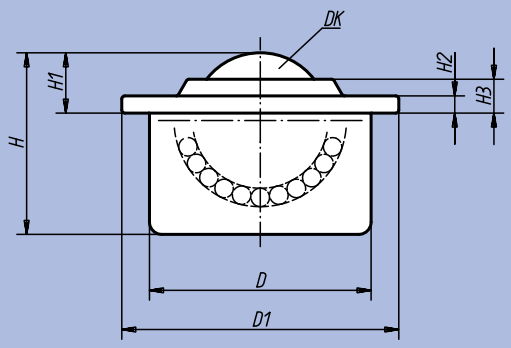

Material:
Steel or stainless steel

Surface finish:
Housing and cover galvanized;
all parts galvanized and balls in stainless steel;
Form D: all parts in stainless steel (ball bearing steel to DIN 17230/ EN 10 088)

Sample order:
nlm 95150-122

Note:
Ball Transfer Units with sheet steel housing are protected against dirt by a felt seal.
Model D also available with plastic run ball.

The versions 95150-115, 95150-215 and 95150-315 are without felt seal.

Way of installation:

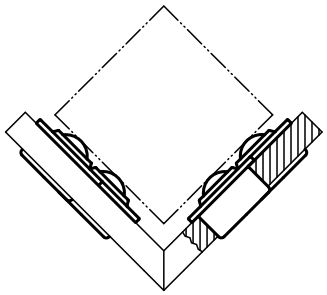

Order No.	Surface finish	DK	D	D1	H	H1	H2	H3	Base load (N)	kg
95150-115	B	15	24 ±0,065	31	21,5	9,5 ±0,2	2,8	6,3	500	0,038
95150-122	B	22	36 ±0,080	45	29,5	9,8 ±0,2	2,8	5,5	1300	0,132
95150-130	B	30	45 ±0,080	55	37,5	13,8 ±0,3	4	8,3	2500	0,265
95150-145	B	45	62 ±0,095	75	54	19 ±0,4	4	10	6000	0,720
95150-215	C	15	24 ±0,065	31	21,5	9,5 ±0,2	2,8	6,3	370	0,038
95150-222	C	22	36 ±0,080	45	29,5	9,8 ±0,2	2,8	5,5	970	0,132
95150-230	C	30	45 ±0,080	55	37,5	13,8 ±0,3	4	8,3	1900	0,265
95150-245	C	45	62 ±0,095	75	54	19 ±0,4	4	10	4500	0,720
95150-315	D	15	24 ±0,065	31	21,5	9,5 ±0,2	2,8	6,3	370	0,038
95150-322	D	22	36 ±0,080	45	29,5	9,8 ±0,2	2,8	5,5	970	0,132
95150-330	D	30	45 ±0,080	55	37,5	13,8 ±0,3	4	8,3	1900	0,265

Ball Transfer Units

with sheet steel housing and plastic load ball



Form B: cap and housing galvanized
Form C: all parts galvanized,
balls in stainless steel

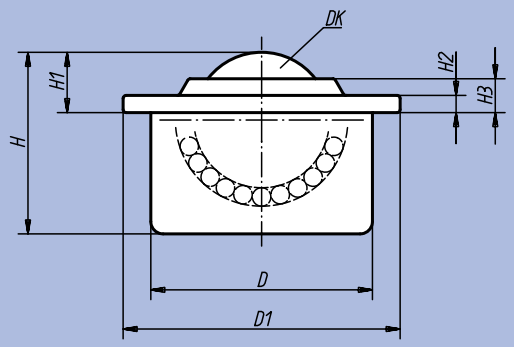

Material:
Housing in steel; balls in nylon

Surface finish:
Cover and housing galvanized;
all parts galvanized and balls in stainless steel

Sample order:
nlm 95152-122

Note:
Ball Transfer Units with plastic load balls are suitable particularly for transporting sensitive materials such as glass or polished aluminium, brass and steel sheets.

The versions 95152-115 and 95152-215 are without felt seal.

Order No.	Surface finish	DK	D	D1	H	H1	H2	H3	Base load (N)	□ kg
95152-115	B	15	24 ±0,065	31	21,5	9,5 ±0,2	2,8	6,3	70	0,024
95152-122	B	22	36 ±0,080	45	29,5	9,6 ±0,2	2,8	5,5	100	0,093
95152-130	B	30	45 ±0,080	55	37,5	13,6 ±0,3	4	8,3	150	0,168
95152-215	C	15	24 ±0,065	31	21,5	9,5 ±0,2	2,8	6,3	70	0,024
95152-222	C	22	36 ±0,080	45	29,5	9,6 ±0,2	2,8	5,5	100	0,093
95152-230	C	30	45 ±0,080	55	37,5	13,6 ±0,3	4	8,3	150	0,168

Spring-loaded Ball Transfer Units



Form B: cap and housing galvanized
Form C: all parts galvanized,
balls in stainless steel

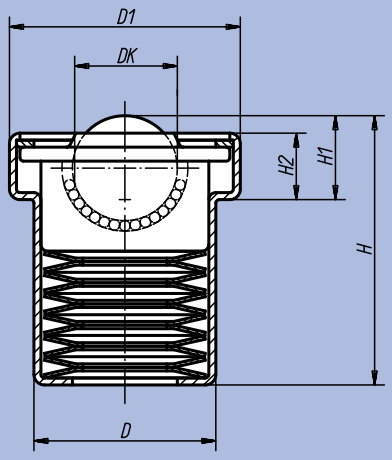

Material:
Steel

Surface finish:
Cover and housing galvanized;
all parts galvanized and balls in stainless steel

Sample order:
nlm 95154-122

Note:
Ball transfer units with spring components allow loads to be distributed evenly when transporting goods with an uneven running surface. When used in machines such as cutting and bending presses etc., the component springs forward again after the machining process is complete and the part can be rolled off.

Under final force (N) the Ball Transfer Unit recedes completely.

Way of installation:

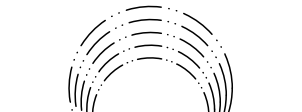

Order No.	Surface finish	DK	D	D1	H	H1	H2	Pretensioning force (N)	Final force (N)	Tolerance for pretensioning force and final force (%)	kg
95154-122	B	22	39	50 ±0,100	58	18,5	13,6	730	860	+25 / -7,5	0,300
95154-130	B	30	48,5	62 ±0,125	70	24,5	17	1350	1600	+15 / -7,5	0,600
95154-145	B	45	66,5	85 ±0,150	100,5	36	24,2	2280	2770	+15 / -7,5	1,600
95154-222	C	22	39	50 ±0,100	58	18,5	13,6	730	860	+25 / -7,5	0,300
95154-230	C	30	48,5	62 ±0,125	70	24,5	17	1350	1600	+15 / -7,5	0,600
95154-245	C	45	66,5	85 ±0,150	100,5	36	24,2	2280	2770	+15 / -7,5	1,600

Ball Transfer Units

with solid steel housing



Form A: metallic bright
Form B: cap and housing galvanized
Form C: all parts galvanized,
balls in stainless steel

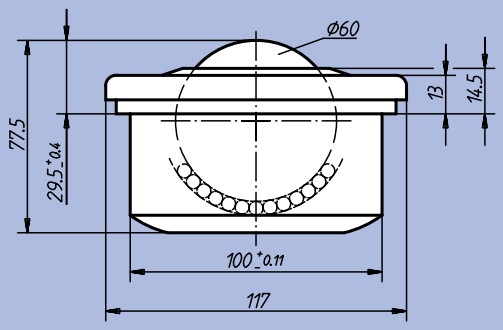

Material:
Steel

Surface finish:
Housing, metallic bright; cover and housing galvanized; all parts galvanized and balls in stainless steel

Sample order:
nlm 95156-060

Note:
Solid ball transfer units also remain functional under severe shock loads and extreme conditions.

Order No.	Surface finish	Base load (N)	kg
95156-060	A	13000	3,500
95156-160	B	13000	3,500
95156-260	C	9700	3,500

Ball Transfer Units

with fastening holes, without housing



Form B: cap and housing galvanized
Form C: all parts galvanized,
balls in stainless steel

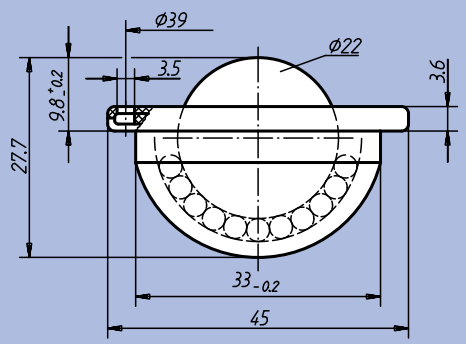

Material:
Steel

Surface finish:
Cover and housing galvanized; all parts galvanized and balls in stainless steel

Sample order:
nlm 95158-122

Note:
Ball Transfer Units with fastening holes for easy assembly and disassembly.

Order No.	Surface finish	Number of fastening holes	Base load (N)	kg
95158-122	B	3	1200	0,100
95158-222	C	3	900	0,100

Ball Transfer Units

with spring clip



Form B: cap and housing galvanized
Form C: all parts galvanized,
balls in stainless steel

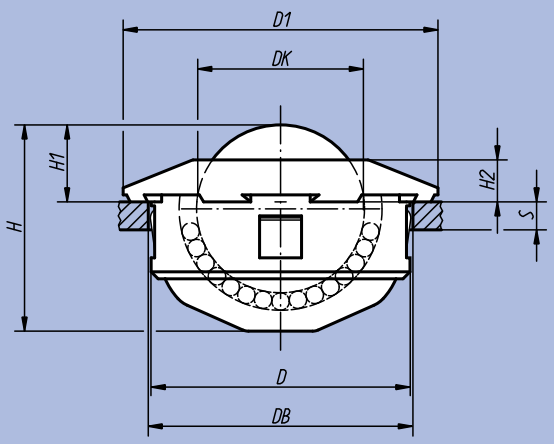

Material:
Steel

Surface finish:
Cover and housing galvanized; all parts galvanized and balls in stainless steel

Sample order:
nlm 95160-122

Note:
Ball Transfer Units with spring clip for easy assembly and disassembly from the load side. Fixing is by means of spring clips, which permit generous tolerances in the mounting hole.
The special cover shape requires use of an assembly tool (95162) by installation.

S = Minimum nominal thickness of mounting base.

Order No.	Surface finish	DK	D	D1	Receiving-Ø DB	H	H1	H2	S	Base load (N)	kg
95160-115	B	15	24 -0,13	31	24 +0,5	20,2	9,5 ±0,2	5,5	1,5	500	0,044
95160-122	B	22	36 -0,16	45	36 +0,5	28,6	9,8 ±0,2	6	2	1300	0,146
95160-130	B	30	45 -0,16	55	45 +1,0	37,5	13,8 ±0,3	8	2,5	2500	0,290
95160-215	C	15	24 -0,13	31	24 +0,5	20,2	9,5 ±0,2	5,5	1,5	370	0,044
95160-222	C	22	36 -0,16	45	36 +0,5	28,6	9,8 ±0,2	6	2	970	0,146
95160-230	C	30	45 -0,16	55	45 +1,0	37,5	13,8 ±0,3	8	2,5	1900	0,290

Assembly tool

for ball transfer units



Material:
Aluminium

Sample order:
nlm 95162-29

Note:
The special cover shape of the Ball Transfer Units with spring clip (95160) requires use of an assembly tool.

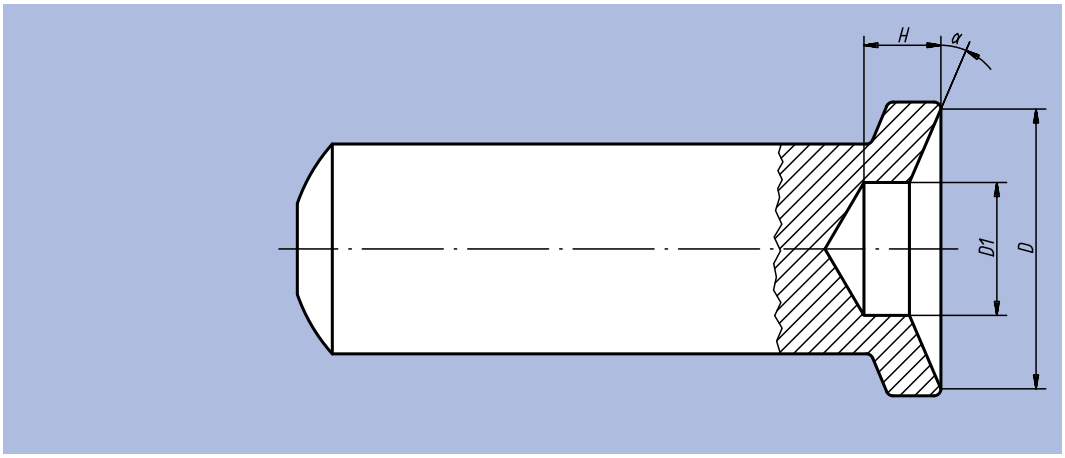

Order No.	D	D1	H	α	Suitable for casters with fixings
95162-29	29	17	10	30°	95160-115 / 95160-215
95162-43	43	24	10	20°	95160-122 / 95160-222
95162-53	53	30	10	24°	95160-130 / 95160-230

Tolerance Rings



Material:
Spring band steel

Sample order:
nlm 95164-024

Note:
The use of tolerance rings allows for a greater range of tolerance between the parts to be jointed.
The ball transfer units can be fitted quickly and cost-effectively.

Mounting example:

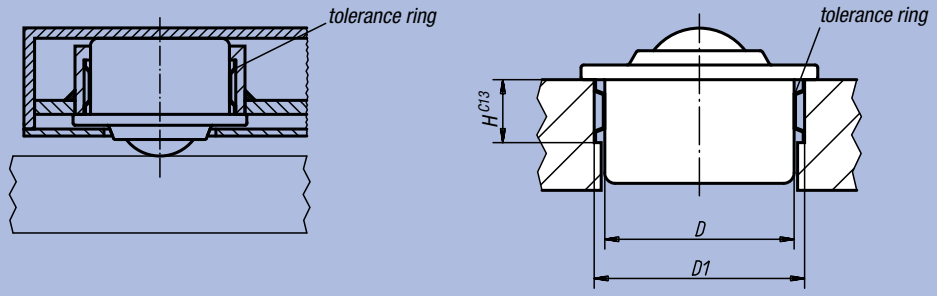

Order No.	Tolerance ring suitable for ball rollers	D	Assembly dimensions D1	Assembly dimensions H
95164-024	95150-.15 / 95152-.15	24	25,7 +0,2	7
95164-036	95150-.22 / 95152-.22	36	37,7 +0,2	12
95164-045	95150-.30 / 95152-.30	45	46,7 +0,2	12
95164-062	95150-.45	62	64,1 +0,3	15
95164-100	95156-.60	100	102,5 +0,35	19

96000

Gauge Strip
Magnetic Labels and Magnetic Envelopes
Protective Nets
Supercraft Mallet
Mallet Inserts
Taper and Cylinder Cleaner



Precision Gauge Strip

Material:
Stainless steel 1.4301, from thickness 0,010 spring steel 1.1274

Surface finish:
Cold-hammered cold-rolled

Sample order:
nlm 96382-0010

Note:
The precision calibre bands are supplied in this practical dispenser. Among other things, they are suitable for dressing, aligning and adjusting tools, parts and moulds, etc., and also for testing fits, verifying and adjusting guides, pressure rollers, profiled templates and numerous other applications.



Order No.	Thickness	Band width (mm)	Length (m)	Thickness tolerance (mm)
96382-0005	0,005	12,7	2	±0,001
96382-0010	0,010	12,7	2	±0,002
96382-0020	0,020	12,7	2	±0,002
96382-0030	0,030	12,7	2	±0,002
96382-0040	0,040	12,7	2	±0,003
96382-0050	0,050	12,7	2	±0,003
96382-0100	0,100	12,7	2	±0,004
96382-0200	0,200	12,7	2	±0,006
96382-0300	0,300	12,7	2	±0,007

Notes:

Head chain

with ring clamp



Material:
Chain in brass;
ring in spring steel 1.5026

Sample order:
nlm 96390-16X320
(Please also indicate dimension L)

Note:
If no length is specified, 1000 mm will be supplied.

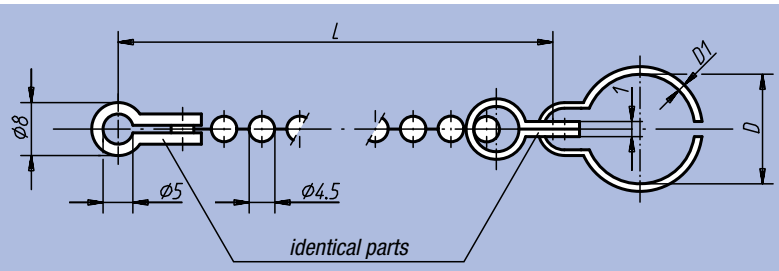

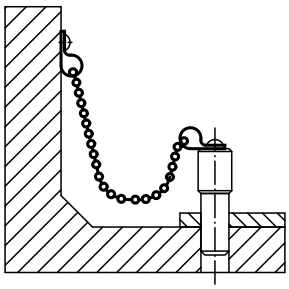

Order No.	L	D	D1
96390-09X	160 / 320 / 500 / 1000	9	1
96390-12X	160 / 320 / 500 / 1000	12	1,2
96390-14X	160 / 320 / 500 / 1000	14	1,6
96390-16X	160 / 320 / 500 / 1000	16	1,6
96390-20X	160 / 320 / 500 / 1000	20	2
96390-24X	160 / 320 / 500 / 1000	24	2
96390-30X	160 / 320 / 500 / 1000	30	2,6
96390-36X	160 / 320 / 500 / 1000	36	2,6

Magnetic labels for the store

from the roll, pre-stamped

Sample order:
nlm 96450-0800201

Note:
Store magnetic labels from the roll are 10 m long, transversely perforated strips of magnetic tape, the individual labels from which can be separated without shears.
Other colours and dimensions available on request.

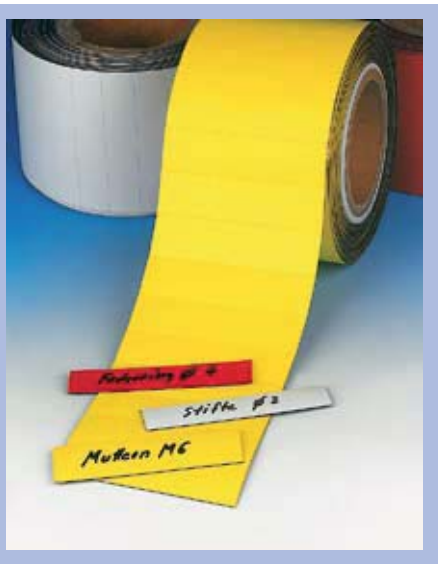

Order No. Surface finish white	Order No. Surface finish yellow	L x B (mm)	Magnetic band: Thickness	Labels per roll	kg/roller
96450-0800201	96450-0800202	80 x 20	0,9	500	2,600
96450-0800401	96450-0800402	80 x 40	0,9	250	2,600
96450-1000501	96450-1000502	100 x 50	0,9	200	3,200

Magnetic labels for stores

Sample order:
nlm 96455-0700202

Note:
Magnetic labels for stores are small magnetic plaques for marking position in the stores. If a chest is stored on the shelf, the magnetic plaque can be quickly stuck up in the new position at no great cost.
Other colours and dimensions available on request.



Order No. Surface finish white	Order No. Surface finish yellow	L x B (mm)	Magnetic band: Thickness
96455-0600101	96455-0600102	60 x 10	0,9
96455-0700201	96455-0700202	70 x 20	0,9
96455-0800301	96455-0800302	80 x 30	0,9
96455-1000401	96455-1000402	100 x 40	0,9
96455-1500501	96455-1500502	150 x 50	0,9
96455-2000801	96455-2000802	200 x 80	0,9

Magnetic Tape Rolls

Sample order:
nlm 96460-301

Note:
Magnetic bands solve labelling problems. They stick onto any steel or metal surface and can be overwritten and reused time and again.
Other colours and dimensions available on request.



Order No. Surface finish white	Order No. Surface finish yellow	Magnetic band: width (mm)	Magnetic band: Thickness	Length	kg
96460-301	96460-302	30	0,9	10 m	1,000
96460-401	96460-402	40	0,9	10 m	1,740

Magnetic C Profiles

Sample order:
nlm 96465-100030

Note:
Magnetic C profiles are full-surface strip labels for labelling stores, or they can be used as header or name tags on planning boards. They are supplied with a cardboard and a transparent cover.
Other dimensions available on request.





Order No.	L x B (mm)
96465-100030	100 x 30
96465-100040	100 x 40
96465-150050	150 x 50

Transparent magnetic plaques

open on the side

Sample order:
nlm 96466-100030

Note:
These transparent magnetic plaques consist of a pocket, the transparent front of which protects the card inserted from dirt. The whole of the back is magnetic.
Other dimensions available on request.





Order No.	L x B (mm)
96466-100030	100 x 30
96466-100065	100 x 65

Magnetic Envelopes

Sample order:
nlm 96470-217155

Note:
Magnetic envelopes are used to transport papers accompanying good during the production simply and safely.





Order No.	L x H (mm)	Suitable sheet size	g
96470-217155	217 x 155	DIN A5	47
96470-220300	220 x 300	DIN A4	75

Magnetic Envelopes

for problem cases

Sample order:
nlm 96471-217155

Note:
Standard envelopes do not provide sufficient safety in the case of severe vibration or where there is insufficient area for adhesion, e.g. wire boxes. These magnetic envelopes therefore have two strong neodymium magnets. They simplify handling in such a way that an envelope only has to be thrown at the wire box. The magnets welded into the magnetic envelopes seek out their own adhesive surface and thus ensure a safe hold.







Order No.	L x H (mm)	Suitable sheet size	g
96471-217155	217 x 155	DIN A5	54
96471-220300	220 x 300	DIN A4	66

Surface Protective Nets



Material:
Polyethylene

Sample order:
nlm 96500-007X25000

Note for ordering:
Release as roll ware only

Note:
Effective protection for surfaces and delicate wares. Very resistant to outside influences and environmentally friendly, i.e., recyclable. Can be self-cut according to individual need.
Usable many times over, thanks to good reset effect at output aperture.

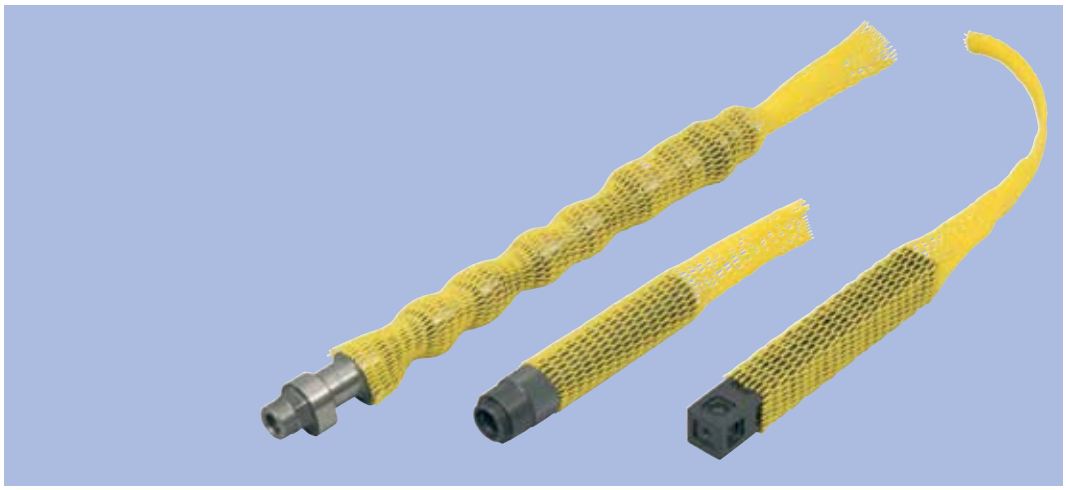

Order No.	Recommended diameter	Colour	Length
96500-007X25000	7-15 mm	orange	250 m
96500-015X20000	15-25 mm	blue	200 m
96500-025X10000	25-50 mm	yellow	100 m
96500-050X10000	50-100 mm	red	100 m
96500-100X05000	100-200 mm	green	50 m

Net Protective Mat

Material:
Polyethylene

Sample order:
nlm 96510-07500950

Note:
Effective protection for surfaces and delicate wares. Very resistant to outside influences and environmentally friendly, i.e., recyclable. Can be self-cut according to individual need.

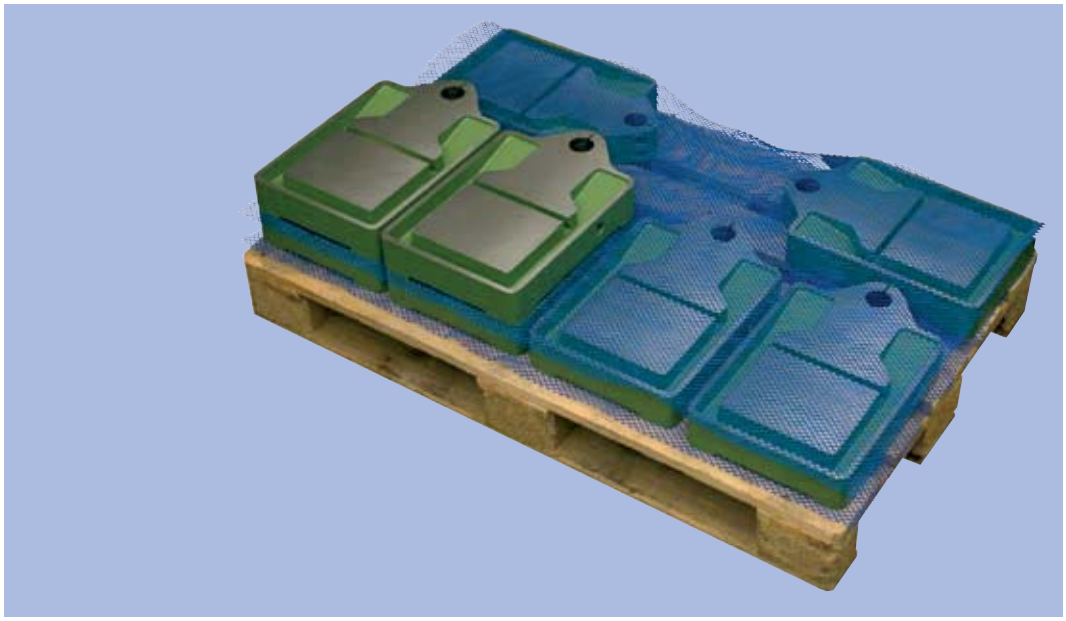

Order No.	Dimensions	Colour
96510-07500950	750x950 mm	blue

Supercraft Mallet

non-rebound

Material:
Housing steel tube filled with steel bruised grain;
shaft steel tube with handle in corrugated rubber or Hickory;
mallet inserts in nylon, white (grease- and oil-resistant)

Sample order:
nlm 96610-05002

Note:
Mallet Inserts for re-ordering see 96614.



Order No.	Surface finish	Head-Ø	Height	Length	g
96610-03001	shaft in Hickory	30	110	330	430
96610-04001	shaft in Hickory	40	115	360	750
96610-05001	shaft in Hickory	50	120	370	1000
96610-06001	shaft in Hickory	60	145	370	1700
96610-03002	shaft steel tube	30	110	290	580
96610-04002	shaft steel tube	40	115	300	850
96610-05002	shaft steel tube	50	120	310	1200
96610-06002	shaft steel tube	60	145	325	1780

Mallet Inserts

for supercraft mallets

Material:
Nylon, white;
grease- and oil-resistant

Sample order:
nlm 96614-04001



Order No.	for Head-Ø	Suitable for Supercraft soft hammers	g
96614-03001	30	96610-030..	23
96614-04001	40	96610-040..	39
96614-05001	50	96610-050..	51
96614-06001	60	96610-060..	106

Taper Cleaner

for Morse tapers



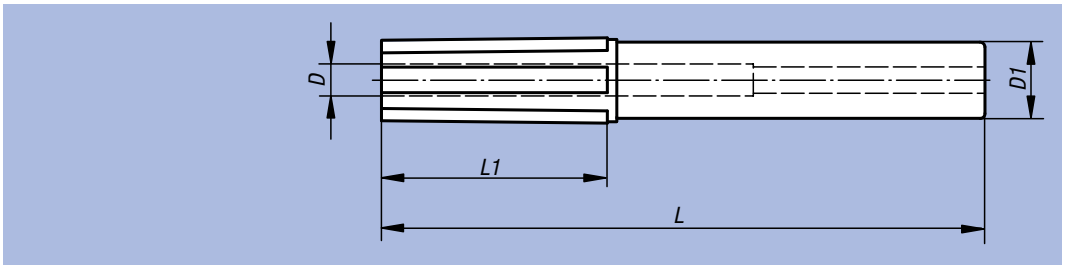

Material:
Plastic, non-woven material covering

Sample order:
nlm 96630-001

Note:
For the cleaning of Morse taper tool holders. The taper cleaner consists of a plastic body with dimensionally stable non-woven material edging. No abrasion particles develop owing to the non-woven material. Dirt particles can be picked up in large clear spaces.

Order No.	Size	D	D1	L	L1	kg
96630-001	MK 1	-	22	136	59	0,020
96630-002	MK 2	10	24	190	71	0,044
96630-003	MK 3	13	24	196	87	0,052
96630-004	MK 4	17	24	222	110	0,065
96630-005	MK 5	21	30	258	136	0,115
96630-006	MK 6	29	34	315	195	0,244

Taper Cleaner

for short tapers

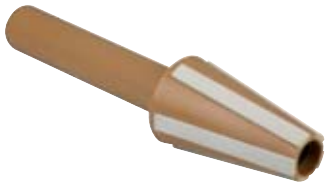

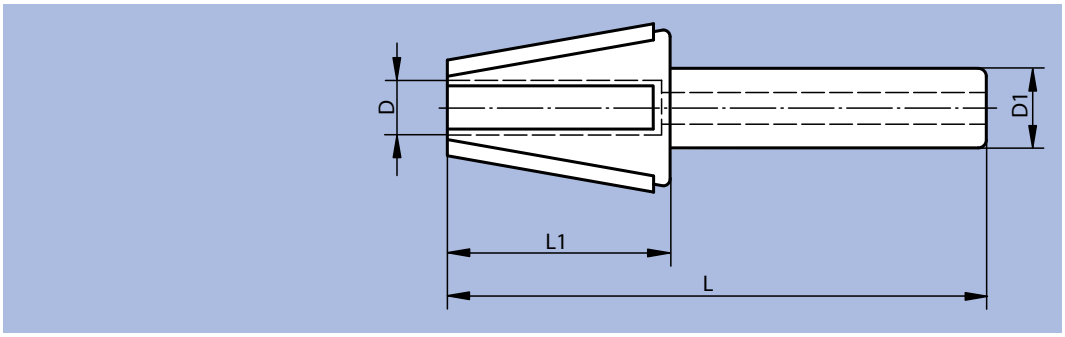

Material:
Plastic, non-woven material covering

Sample order:
nlm 96632-020

Note:
For the cleaning of short taper tool holders. The taper cleaner consists of a plastic body with dimensionally stable non-woven material edging. No abrasion particles develop owing to the non-woven material. Dirt particles can be picked up in large clear spaces.

Order No.	Size	D	D1	L	L1	kg
96632-020	SK 20	7,5	15	102	39	0,016
96632-030	SK 30	9,5	24	168	55	0,045
96632-040	SK 40	16	24	188	73	0,061
96632-045	SK 45	21	26	115	96	0,098
96632-050	SK 50	26	30	240	116	0,176

Taper Cleaner

for hollow shank tapers



Material:
Plastic, non-woven material covering

Sample order:
nlm 96634-025

Note:
For the cleaning of hollow shank taper tool holders. The taper cleaner consists of a plastic body with dimensionally stable non-woven material edging. No abrasion particles develop owing to the non-woven material. Dirt particles can be picked up in large clear spaces.

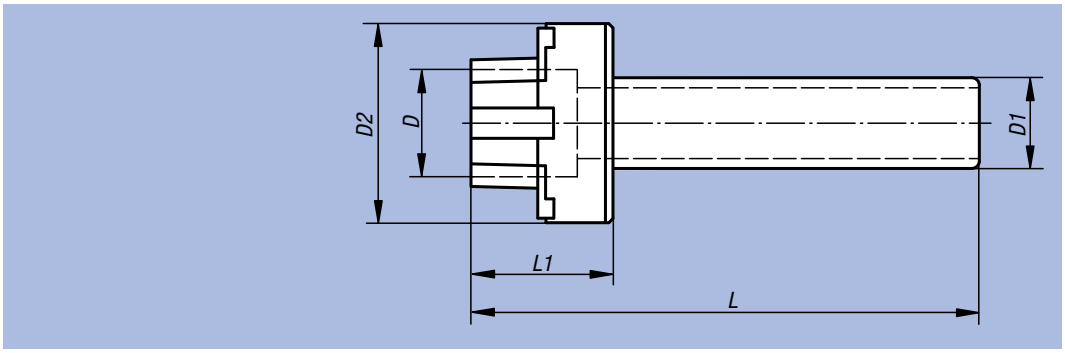

Order No.	Size	D	D1	D2	L	L1	kg
96634-025	HSK 25	14	22	33	114	9	0,027
96634-032	HSK 32	17	24	35	138	10	0,048
96634-040	HSK 40	22,2	24	45	142	13	0,054
96634-050	HSK 50	27,5	24	53	152	17	0,071
96634-063	HSK 63	35	30	66	168	22	0,120
96634-080	HSK 80	44	30	83	178	27	0,153
96634-100	HSK 100	57	30	103	199	34	0,203

Cylinder Cleaners



Material, surface finish:
Body ABS;
cleaner PA-flock,
holohedrally coated

Sample order:
nlm 96636-006

Note:
For gentle and efficient cleaning of cylindrical tool holders and drill holes or every kind.

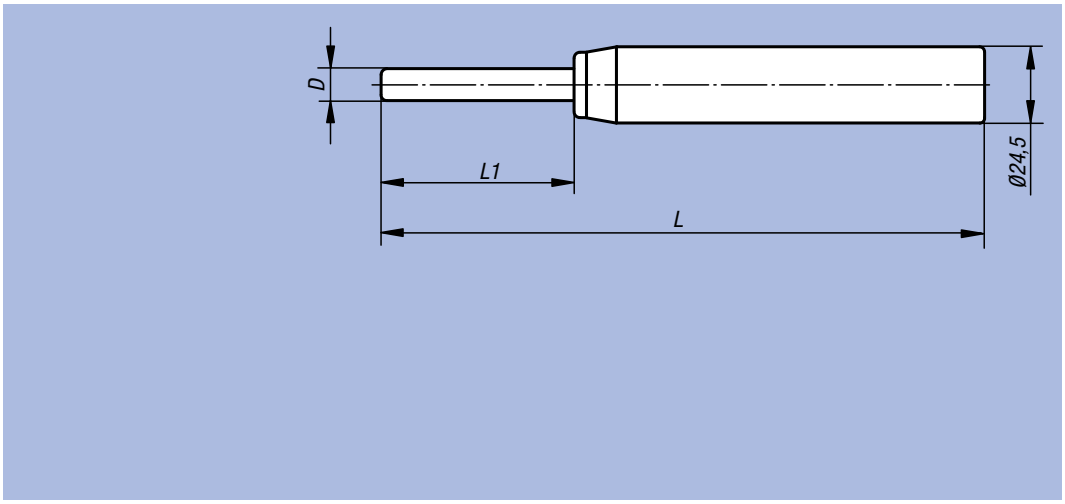

Order No.	D	L	L1	kg
96636-006	6	158	37	0,036
96636-008	8	158	37	0,038
96636-010	10	168	47	0,039
96636-012	12	168	47	0,041
96636-014	14	168	47	0,043

Cylinder Cleaners

two parts



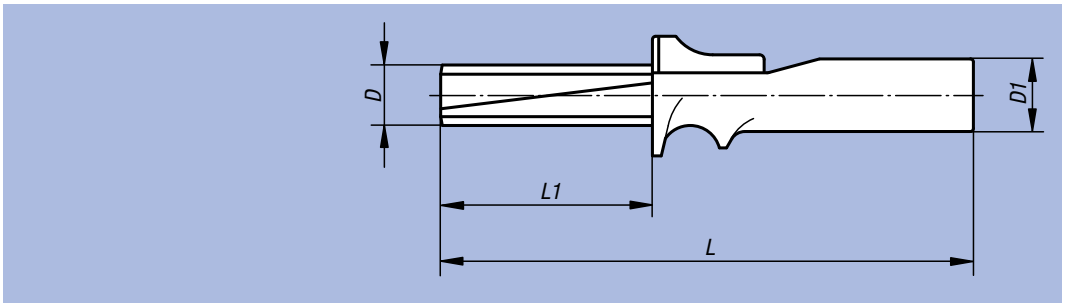

Material:
Body ABS;
cleaner, non-woven material edging

Sample order:
nlm 96638-016

Note:
For gentle and efficient cleaning of cylindrical tool holders and drill holes or every kind.

Application:
1. Relaxing the cleaner by pushing the thumb piece = Ø-reduction.
2. Tensing the cleaner by letting go of the thumb piece, 360° turn, pull back.

Order No.	D	D1	L	L1	kg
96638-016	16	24	176	70	0,039
96638-018	18	24	176	70	0,040
96638-020	20	24	176	70	0,041
96638-025	25	24	186	80	0,050
96638-032	32	30	221	100	0,084
96638-040	40	30	226	105	0,105
96638-042	42	30	226	105	0,110

Notes:

Notes:

97000

Lubricants
Adhesives



Klüber „Quietsch-Ex“



Sample order:
nlm 97900-250

Description:
The “Quietsch-Ex” (no squeak) universal lubricant for industry, the home, garden, car, motorbike, hobby and sport.

Application:
Approved for lubricating bearings, slides, chains, locks and hinges.
Cleaning and lubricating oil for the motorbike and to protect machines, equipment, tools and vehicles, etc., from corrosion, e.g. in winter.
It is particularly good for machines and equipment, which are often used outdoors in all weathers.
Rusty screws, hinges and bolts that are rusted solid can be loosened or moved again without destroying them.

Advantages:
Lubricates, repels moisture, counteracts corrosion, improves sliding, loosens rust, protects from freezing and is even good for saws and drills.
It even penetrates into the smallest gap and reaches every point of friction not yet accessible.

Order No.	Package	Viscosity Class
97900-250	250 ml spray	ISO VG 32

Klüber Lubricating Paste



Sample order:
nlm 97901-60

Description:
Klüber 46 MR 401 paste is a white multi-purpose lubricating paste, which provides very high reliability against friction, wear and friction rust.

Application:
Approved as a lubricant for long-term and lifetime lubrication, as an assembly aid and a thread lubricant for CrNi bolted joints. Besides its use as an assembly aid in press-on manufacture, Klüber paste produces advantages and safety anywhere that low sliding speeds, very high pressures, high wear, stick-slipping, oscillating movements, vibrations and tribocorrosion occur.
Its preferred uses are in areas of low sliding speeds: threaded spindles, adjustment screws, splined shafts, ball joints, gear wheels, radial packing rings, O-ring seals, V-rings, elastic rubber collars and roller bearings.

Advantages:
Protects from corrosion, is water-resistant, actively adhesive and is neutral with non-ferrous metals. As a result of its white colour, which forms an almost invisible, highly efficient lubricant film, it is particularly suited to places in which dark pastes are undesirable for visual reasons and cleanliness is promoted.

Order No.	Package	Working temperature	NLGI Class
97901-060	60 g tube	-40 °C up to 150 °C	1
97901-750	750 g can	-40 °C up to 150 °C	1

Klüber Copper Paste

lead-free



Sample order:
nlm 97903-400

Description:
The copper paste „Wolfracoat C“ is a metallic lubricating paste for use in temperatures up to 1200 °C.

Application:
Approved as an assembly, separating and lubricating paste for sliding contact bearings and lubricating points, roller bearings in foundries for cores and ejectors, in die-casting machines, exhaust systems of incinerator, power machine and coke oven plants.

Advantages:
The base oil evaporates at over 200 °C. A dry, metallic lubricant film gradually forms.
Good lubrication of friction points with sliding and rolling friction, good separation and lubrication for stuck joints where there is friction at rest and in movement: improved sliding for easy assembly of interference and transition fits, easy dismantling when loosening stuck joints.

Order No.	Package	Working temperature	NLGI Class
97903-060	60 g tube	-30 °C up to 1200 °C, above 200 °C exchange into dry lubrication	2
97903-400	400 ml spray	-30 °C up to 1200 °C, above 200 °C exchange into dry lubrication	2

Klüber Safety Lubricating Grease



Sample order:
nlm 97905-250

Description:
The safety lubricating grease “Microlube GL 261” is a lubricant for high loads at low and high temperatures.

Application:
Lubricating grease for roller and sliding contact bearings, crown gears, steering racks, small gears, adjustment gears, winders and winches, roller guides, cams and cam plates.
Sealing and lubricating grease for oil and grease-resistant rubber seals such as radial packing rings, O-rings, cylinder and piston seals in the pneumatics industry; for rotary shaft lip seals (shaft seals), for plastics, sliding rails, sliding roofs and seat rails.
Anticorrosive grease for bright metal parts, locks, internal connection systems and ship fittings, for antennas, battery poles and to counter saltwater corrosion.

Advantages:
The MICROLUBE combination of active ingredients increases the percentage contact rea of metal surfaces where there is micro-contact friction. The wear-free smooth coating (friction-point tempering) counteracts corrosion and fitting rust.

Order No.	Package	Working temperature	NLGI Class	Rev. characteristic n x dm
97905-250	250 ml spray	-30 °C up to 140 °C	1	3 x 100000
97905-400	400 g cartridge	-30 °C up to 140 °C	1	3 x 100000

Klüber molybdenum disulphide lubricant



Sample order:
nlm 97907-1000

Description:
The molybdenum disulphide lubricant UNIMOLY GL 82 is a lubricating grease with MoS2 for improved fail-safe procedures.

Application:
Approved for roller and slide bearings, sliding rails and guides, cams and cam plates, bolts, joints, hinges, cardan shafts, steering racks, threaded spindles across the entire machinery and mechanical engineering industry.
Approved for wheel bearing lubricant, as well as multipurpose lubricant for king pins, track rod joints, cardan shafts and spline shafts.

Advantages:
Contains molybdenum disulphide (MoS2) for improved wear protection in the case of boundary lubrication; waterproof and corrosion preventive.
Based on automobile manufacturers' requirements.

Order No.	Package	Working temperature	NLGI Class	Rev. characteristic n x dm
97907-0400	400 g cartridge	-20 °C up to 130 °C	2	5 x 100000
97907-1000	1 kg can	-20 °C up to 130 °C	2	5 x 100000

Klüber Liquid Chain Grease



Sample order:
nlm 97909-250

Description:
STRUCTOVIS BHD liquid chain grease is „chain honey" for drive and control chains.

Application:
Approved for long-term lubrication for all drive and control chains. Especially also for water damp chains or open running toothed wheels and gearbox, on forklifts, conveyors, packaging machines, textile machines, robots, paper and wood processing machines.
Ideal for long-term lubrication of motorcycle chains. Is not washed off by rain or splashing water. Ideal for street racing, in particular for coupling chains, feeding mechanisms, crown gears. Protects and lubricates in sun, rain and snow.

Advantages:
Clings and sticks like honey. This „chain honey" is colourless, transparent, creeps well, is wear and corrosion preventive, noise reducing and temperature resistant.

Order No.	Package	Working temperature	Kinematic viscosity DIN 51561 at 40 °C mm²/s
97909-250	250 ml spray	-5 °C up to 120 °C	≈4750

Klüber Anti-rust and Lubricating Wax



Sample order:
nlm 97911-250

Description:
"Syntheso W" anti-rust and lubricating wax is a waxy and water-repellent protective lubricant.

Application:
Protective substance, approved for all polished metal parts on machines and equipment, for bumpers, wheel caps and especially for battery poles and terminals.
Lubricant for tools, bearings, guides and chains on paper and textile processing machines domestic machinery and office equipment. Especially for extending the standing time of cutting blades in the foil, paper and cardboard-processing industry. In the automotive industry for seat rails, joints and guides.
Spray-on wax for bicycle chains, especially for cyclo-cross.

Advantages:
Bright, transparent and non-dirtying combination of waxes to protect and lubricate.
Great lubricating and protecting capacity, even against saltwater.
Forms a solid protective film and a waxy lubricant film at higher doses.

Order No.	Package	Anti-corrosive behaviour in the humidity chamber DIN 50017
97911-250	250 ml spray	no corrosion after 10 tours (equivalent to 240 hours)

Klüberbio Adhesive Lubricating Oil



Sample order:
nlm 97917-250

Description:
Klüberbio CA 2-100 lubricating oil is a 100% synthetic, rapidly degradable adhesive lubricating oil.

Application:
Klüberbio CA 2-100 adhesive lubricating oil was specially developed for exposed drive and conveyor chains, spindles and joints where dripping lubricant could pollute the environment.
Approved for use in agriculture, forestry and water-management plant and machinery as well as garden equipment or DIY and handicraft machines.

Advantages:
The oil has an excellent viscosity-temperature ratio and can be used over a wide range of temperatures.
It contains antiwear and anticorrosion additives and adhesion improvers and has excellent anti-ageing and anti-oxidation stability.
It is solvent-free and has a high penetrating capacity.

Storage:
In dry rooms and in the original unopened packaging approx. 2 years.

Order No.	Package	Working temperature	Biological degradability CEC-L-33-T-82 after 21 days
97917-250	250 ml spray	-30 °C up to 110 °C	>70%

Klüber Lubricating Paint

UNIMOLY C 220

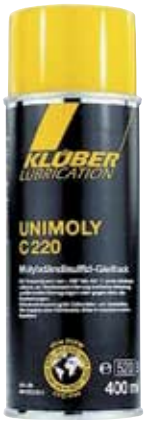

Sample order:
nlm 97920-400

Description:
Lubricating paints consist of a solid lubricant, a bonding agent and a solvent. After it has been applied and has dried, the lubricating paint forms a thin lubricant layer that reduces friction and wear. It is dry, adheres firmly to the surface and cannot drip.

Application:
For use in dry lubrication under high loads, oscillating movements or to counter stick-slip occurrences. For use in lifetime lubrication of threaded spindles, hinge pins, cylinder pins and in assembly. Improves wear on gearwheels and crown gears, reduces friction values in cylinder head bolts.

Advantages:
Dry lubricants cannot drip. Therefore a possible pollution of the environment, which may be the case with oil or grease-based lubricants, can be excluded.

Order No.	Package	Working temperature	Water Hazard Class
97920-400	400 ml aerosol	-180 °C up to 450 °C	WGK 2

Ballistol All-purpose Oil

in foods quality



Sample order:
nlm 97930-100200

Note:
Ballistol all-purpose oil is approved in the foods industry for product contact surfaces. All Ballistol components are biodegradable and harmless to the environment.
It is skin-friendly and completely harmless in case of accidental intake.
As spray without CFCs.

Description:
Ballistol as a high-quality special oil combines anti-rust, lubricating oil, maintenance and cleaning agent with high creep-ability and disinfection power all in one.

Application:
The all-purpose oil is used versatilely in machine and tool manufacturing, for the fabrication and maintenance of precision devices, scales and in light engineering.
Due to its high pharmaceutical quality, it is outstandingly suited for the foods processing sector.
It finds multiple use in industrial art, industry, agriculture, housekeeping, garden, for automobiles, fishing, hunting and shooting, in the maintenance of metal, wood, plastic, leather, rubber, skin, fur and much more.

Advantages:
Due to its low surface tension and terrific creep-ability, it penetrates into the narrowest nooks and finest cracks.
Ballistol forms an alkaline protective film on metals, neutralises hand sweat and other acidic rust promoting residues and thus protects against corrosion.
Its oil base is medicinally clean white oil. It is non-ageing and does not resinify ven after years.

Storage:
The packaging is tightly sealed, indefinitely durable.

Order No.	Package
97930-100200	200 ml aerosol
97930-100400	400 ml aerosol
97930-205000	5 litre liquid canister

LOCTITE Liquid Epoxy Metals



Sample order:
nlm 97990-3471500



Repairs using liquid epoxy metal

Description:
LOCTITE Metal-Set liquid metals are steel or aluminium-based epoxy resins. They set new standards in repairs: great strength, very good adhesion, no shrinkage, resistant to most solvents and lubricants. After hardening they can be worked by hand or machined from chipping to thread-cutting just like metal and can be painted.
Cracks, porous spots, faulty holes or damage to pipes, tanks, chassis and machine parts can be quickly and durably repaired using LOCTITE Metal-Set products. They adhere well to metals, glass, ceramics and other materials.

Type S1 – 97990-3471500
The filler product. High strength and excellent adhesion to other materials. For narrow spaces.

Type S2 – 97990-3472500
The casting product. Great moulding accuracy in building moulds. High strength and excellent adhesion to other materials. Good for machining. No shrinkage.

Type M – 97990-3474500
This product contains metal particles, which produce high resistance to wear and self-lubricating characteristics. For the repair of sliding surfaces e.g. shafts and guide tracks, etc.
Other properties shared with Type S1.

Order No.	Package	Intern. Ident. No.	Product	Mixture ratio	Dexterity in min.	Tensile shear strength N/mm²	Temperature resistance
97990-3471500	Pair of cans, 500 g	3471	Metal-Set S1	1:1	180	15-22	-20 °C up to +120 °C
97990-3472500	Pair of cans, 500 g	3472	Metal-Set S2	1:1	180	15-22	-20 °C up to +120 °C
97990-3474500	Pair of cans, 500 g	3474	Metal-Set M	1:1	180	15-22	-20 °C up to +120 °C

LOCTITE Liquid Epoxy Metals

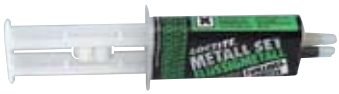

Sample order:
nlm 97990-3450025



Repairs using liquid epoxy metal

Description:
LOCTITE Metal-Set liquid metals are steel or aluminium-based epoxy resins. They set new standards in repairs: great strength, very good adhesion, no shrinkage, resistant to most solvents and lubricants. After hardening they can be worked by hand or machined from chipping to thread-cutting just like metal and can be painted. Cracks, porous spots, faulty holes or damage to pipes, tanks, chassis and machine parts can be quickly and durably repaired using LOCTITE Metal-Set products. They adhere well to metals, glass, ceramics and other materials.

Twin sprays – Liquid Epoxy Metals 97990-3450025
Automatically guarantees the correct mixing ratio. High strength and excellent adhesion to other materials. Good for machining. Does not shrink.

Order No.	Package	Intern. Ident. No.	Product	Mixture ratio	Dexterity in min.	Tensile shear strengt N/mm²	Temperature resistance
97990-3450025	25 ml	3450	Twin syringe	1:1	12	15-22	-55 °C up to +100 °C

Notes:

LOCTITE Screw Lock



Sample order:
nlm 97990-2220050

Note:
LOCTITE Screw Lock mid-strength, 97990-243... has a KTW Recommendation from the German Federal Ministry of Health in the D2 sealant joints industry based on an inspection carried out by the DVGW Research Institute: suitable for use in the foodstuffs and potable water industries.

* Values to ISO 10964.



Screw locks

Description:
For use with all screw connections. Applied as a liquid, it hardens after being screwed in, in the absence of air and on contact with the metal in the thread.

LOCTITE Screw Lock low-strength, 97990-222....
To secure adjustment and alignment screws up to thread size M20. Even parts with a high length to diameter ratio can be loosened again. Prevents corrosion. Good vibration resistance. Easy to remove and adjust.
Temperature-resistant from -55 °C to +150 °C.

LOCTITE Screw Lock mid-strength, 97990-243....
To lock and seal threaded joints, standard thread up to M20, fine thread to M36. Also hardens on lightly oiled surfaces. Resists loosening by vibration. Can be loosened again with a standard tool.
Temperature-resistant from -55 °C to +150 °C.
KTW-recommended.

LOCTITE Screw Lock high-temperature, 97990-2720050
To provide high-strength locking of threaded joints for thread sizes up to M36. Temperature resistant up to 200 °C. Easily applied due to its thixotropic components.
Temperature-resistant from -55 °C to +200 °C.

LOCTITE Screw Lock capillary, 97990-290....
Locks and seals by capillary action when applied subsequently, e.g. in already tightened threads or in porosities and cracks. Secures pre-mounted bolts from vibration and loss of tension. For connections up to M8.
Temperature-resistant from -55 °C to +155 °C.

LOCTITE Screw Lock high-strength, 97990-2701...
To secure and seal threaded connections up to M20, which no longer have to be loosened. Resists loosening by vibration under high dynamic load. The product is also suitable for high-strength joint connections. Can only be removed after heating to 300 °C.
Temperature-resistant from -55 °C to +150 °C.

Order No.	Package	Intern. Ident. No.	Hardening system	Viscosity m Pa · s	Dexterity in min.	Ultimate hardness in hours	Shearing strength N/mm²	Break-away torque Nm	Thread size
97990-2220010	10 ml flagon	222	anaerobic	90-180	15	12	3-9	8-20	up to M20
97990-2220050	50 ml flagon	222	anaerobic	90-180	15	12	3-9	8-20	up to M20
97990-2430010	10 ml flagon	243	anaerobic	250-500	12	12	6-14	14-34	up to M20
97990-2430050	50 ml flagon	243	anaerobic	250-500	12	12	6-14	14-34	up to M20
97990-2720050	50 ml flagon	272	anaerobic	~2000	30	12	18-30	18-28*	up to M36
97990-2900010	10 ml flagon	290	anaerobic	10-30	20	12	6-20	15-45	up to M8
97990-2900050	50 ml flagon	290	anaerobic	10-30	20	12	6-20	15-45	up to M8
97990-2701010	10 ml flagon	2701	anaerobic	350-700	10	12	11-20	25-54	up to M20
97990-2701050	50 ml flagon	2701	anaerobic	350-700	10	12	11-20	25-54	up to M20

LOCTITE Universal Adhesive



Sample order:
nlm 97990-4010050

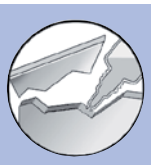

Bonding different materials

Description:
These adhesives bond metals, rubber, plastics and other materials with and to each other. Bonds strongly in a few seconds.

LOCTITE Universal Adhesive (cyanoacrylate), 97990-401....
This adhesive bonds the most varied material connections (metals, plastics, leather, rubber, wood, cardboard, ceramics, etc.) and achieves great strength in small gaps.
Temperature-resistant from -50 °C to +80 °C.

LOCTITE Universal Adhesive gel (cyanoacrylate), 97990-454....
This gel adhesive can be applied exactly, with no running and no drips, even on vertical surfaces. Bonds the most varied materials, even porous materials. Good gap-filling capacity.
Temperature-resistant from -50 °C to +80 °C.

LOCTITE Plastic Adhesive, 97990-4060770
The combination for plastics of contact adhesive 406 (cyanoacrylate) and the primer 770 for plastics difficult to bond e.g. polyethylene (PE) and polypropylene (PP).
Temperature-resistant from -50 °C to +80 °C.

Order No.	Package	Intern. Ident. No.	Hardening system	Viscosity m Pa · s	Dexterity in sec.	Ultimate hardness in hours	Tensile strength N/mm²	Tensile shear strength N/mm²	Adhesion gap in mm
97990-4010020	20 g flagon	401	air humidity	90-140	3-30	12	12-25	18-26	0,05-0,1
97990-4010050	50 g flagon	401	air humidity	90-140	3-30	12	12-25	18-26	0,05-0,1
97990-4060770	20/10 g set	406/770	air humidity	10-30	2-50	12	12-25	18-26	0,05-0,1
97990-4540020	20 g tube	454	air humidity	gel	2-40	12	12-25	18-26	0,05-0,1

nlm 97990

LOCTITE Thread Sealant



Sample order:
nlm 97990-5110250

Note:
LOCTITE Plastic Thread Sealant, 97990-5331100 has a KTW Recommendation from the German Federal Ministry of Health in the D2 sealant joints industry based on an inspection carried out by the DVGW Research Institute: suitable for use in the foodstuffs and potable water industries.

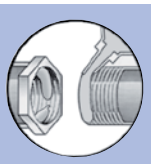

Pipe Thread Seals

Description:
The liquid thread sealant replaces hemp, pastes and PTFE-tapes.
Parts can be immediately realigned after jointing.

LOCTITE-Liquid Pipe Thread Sealant, 97990-511....
For threads up to max. R2". The product has been licensed by the DVGW under No. 86.01 e 125 (pursuant to DIN 30661) for sealing threaded joints in switchboxes and gas equipment.
Temperature-resistant from -55 °C to +150 °C.

LOCTITE-Liquid Pipe Thread Sealant low-strength, 97990-577....
For threads up to max. R3". BAM-licensed for use in the oxygen industry up to 15 bar and +60 °C. Area of use: e.g. in repairs, because it is very easy to dismantle using standard tools.
Temperature-resistant from -55 °C to +150 °C.

LOCTITE-Plastic Thread Sealant, 97990-5331100
Permanently elastic for plastic threads, metal/metal and plastic/metal combinations. KTW-recommended.
Temperature-resistant from -60 °C to +150 °C.

Order No.	Gebinde	Intern. Ident. No.	Hardening system	Viscosity m Pa · s	Dexterity in min.	Ultimate hardness in hours	Break-away torque Nm	Thread size
97990-5110050	50 ml flagon	511	anaerobic	3000-60000	25	12	5-15	up to R2"
97990-5110250	250 ml tube	511	anaerobic	3000-60000	25	12	5-15	up to R2"
97990-5770050	50 ml flagon	577	anaerobic	4500-9000	30	24	9-25	up to R3"
97990-5770250	250 ml tube	577	anaerobic	4500-9000	30	24	9-25	up to R3"
97990-5331100	100 ml tube	5331	air humidity	40000	immediately	12	4,5	up to R3"

LOCTITE Surface Sealant



Sample order:
nlm 97990-5730250

Note:
* Skin formation time.



Surface Sealants

Description:
The adaptability of liquid or paste surface sealants solves almost every sealant problem.

LOCTITE Surface Sealant low strength, 97990-573…
Resistant to the majority of lubricating and hydraulic oils, petrol, diesel and water. Produces 100% surface contact, therefore it is absolutely impervious. Replaces thin paper seals in gear housings, water and fuel pumps, thermostat housings and many more.

LOCTITE Surface Sealant removable, 97990-5203300
Very easy to remove; can be peeled off as a film. Rapid hardening.
Temperature-resistant from -55 °C to +150 °C.

LOCTITE Surface Sealant permanently elastic, 97990-5910300.
For non-warping flanges and plastic/plastic and metal/plastic combinations.

Order No.	Package	Intern. Ident. No.	Hardening system	Viscosity m Pa · s	Dexterity	Ultimate hardness in hours	Tensile strength N/mm²	Tensile shear strength N/mm²	Adhesion gap in mm
97990-5730050	50 ml flagon	573	anaerobic	5000-10000	9 hours	72	2-8	0,5-1,5	up to 0,1
97990-5730250	250 ml tube	573	anaerobic	5000-10000	9 hours	72	2-8	0,5-1,5	up to 0,1
97990-5731000	1000 ml can	573	anaerobic	5000-10000	9 hours	72	2-8	0,5-1,5	up to 0,1
97990-5203300	300 ml cartridge	5203	anaerobic	10000-30000	10 min.*	72	2-6	1-4	up to 0,25
97990-5910300	300 ml cartridge	5910	air humidity	paste	20 min.*	2,5 mm / 24 hours*	2-7	0,9-1,4	>0,3

nlm 97990

LOCTITE Adhesive and Sealant



Sample order:
nlm 97990-5366310

Note:
* Skin formation time.
** 50% relative humidity at room temperature.

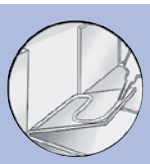

Elastic bonding and sealing

Description:
For permanently elastic adhesive joints and a simultaneous sealant effect against water and dust, etc.

LOCTITE Permanently Elastic Adhesive and Sealant, 97990-5366310
Transparent and temperature-resistant. For bonding glass, metals, ceramics and almost all plastics.
Temperature-resistant from -65 °C to +250 °C.

LOCTITE Permanently Elastic Black Adhesive and Sealant, 97990-5368310
Resistant to chemicals and oil products. Bonds the majority of materials with and to each other.
Temperature-resistant from -65 °C to +250 °C.

LOCTITE high temperature-resistant, permanently elastic Adhesive and Sealant, 97990-5399310
Red, resistant up to 350 °C short-term. Bonds the majority of materials with and to each other.
Temperature-resistant from -60 °C to +275 °C.

Order No.	Package	Intern. Ident. No.	Hardening system	Dexterity in min.	Ultimate hardness	Tensile strength N/mm²	Elongation %	Adhesion gap in mm	Hardness Shore A
97990-5366310	310 ml cartridge	5366	air humidity	5*	4 mm in 24 hours**	1,8	500	>0,5	20
97990-5368310	310 ml cartridge	5368	air humidity	5*	4 mm in 24 hours**	2	425	>0,5	24
97990-5399310	310 ml cartridge	5399	air humidity	5*	4 mm in 24 hours**	3,3	500	>0,5	33

LOCTITE Jointing product



Sample order:
nlm 97990-6030010



Bond bushes and bearings

Description:
For bonding of bushes, bearings and sleeves at push fit, interference fit and shrink fit.
Full surface contact prevents play, corrosion and fitting rust.

LOCTITE Jointing Product, oil-tolerant, 97990-603....
Wide range of uses. Especially suited for fixing bearings. Tolerates slight oily pollutants.
Temperature-resistant from -55 °C to +150 °C.

LOCTITE Jointing Product, special, 97990-638....
High gap-filling capacity and very quickly finger-tight. Temperature-resistant from -55 °C to +150 °C.

LOCTITE Universal Jointing Product, 97990-648....
Good gap-filling capacity, rapidly finger-tight and it has excellent temperature resistance.
Temperature-resistant from -55 °C to +175 °C.

Order No.	Package	Intern. Ident. No.	Hardening system	Viscosity m Pa · s	Dexterity in min.	Ultimate hardness in hours	Shearing strength N/mm²	Break-away torque Nm	Adhesion gap in mm
97990-6030010	10 ml flagon	603	anaerobic	90-180	10	12	16-25	40-60	0,05-0,15
97990-6030050	50 ml flagon	603	anaerobic	90-180	10	12	16-25	40-60	0,05-0,15
97990-6380010	10 ml flagon	638	anaerobic	1500-3000	5	12	20-35	35-60	0,05-0,25
97990-6380050	50 ml flagon	638	anaerobic	1500-3000	5	12	20-35	35-60	0,05-0,25
97990-6480010	10 ml flagon	648	anaerobic	300-600	5	12	16-30	30-55	0,05-0,15
97990-6480050	50 ml flagon	648	anaerobic	300-600	5	12	16-30	30-55	0,05-0,15

nlm 97990

LOCTITE Cleaner



Sample order:
nlm 97990-7063400



Surface preparation

Description:
Cleaning increases the quality of sealed and bonded joints.

LOCTITE Rapid Cleaner, 97990-7063…
Removes oil, grease and dirt from metal and the majority of plastic surfaces.
Ideal for preparation of adhesive surfaces, rapid evaporation.

LOCTITE Rapid Cleaner, 97990-7070400
Very good capacity for dissolving grease and oil residues because of the combination of unripe lemons and iso-paraffin. Evaporates leaving no residue and has a pleasant citrus perfume.

LOCTITE Adhesive and Sealant Remover, 97990-7080300
For gentle removal of adhesive and sealant residues. Replaces mechanical treatment, which often leads to damage to surfaces.

Order No.	Package	Intern. Ident. No.
97990-7063150	150 ml aerosol	7063
97990-7063400	400 ml vaporizer	7063
97990-7070400	400 ml vaporizer	7070
97990-7080300	400 ml aerosol	-

LOCTITE Activators



Sample order:
nlm 97990-7113000

Note:
The activators are supplied in 500-ml packs.

Description:
To harden cyanoacrylate (CA) adhesives and anaerobically hardened adhesives; activators are used in passive materials for rapid and complete hardening. To that end the liquid activator is applied to one or both surfaces of the joint before the adhesive is applied.

Order No.	Activator type	Intern. Ident. No.	Open time	Carrier medium	Application
97990-7025000	CA-activator (previously)	7025	24 hours	heptane	Cure accelerator for previously application.
97990-7113000	CA-activator (subsequently)	7113	24 hours	heptane	Activator for subsequently application to cure just liquid cyanoacrylate adhesive.
97990-7386000	activator for 3298	7386	1 hour	heptane	Only for single side activation.
97990-7471000	activator T for anaerobic products	7471	30 days	acetone/ isopropanol	Cure accelerator, may be applicated on both sides.
97990-7649000	activator N for anaerobic products	7649	30 days	acetone	May be applicated on both sides of the assembly parts.

nlm 97990

Dosing equipment



Sample order:
nlm 97990-9700100



Dosing equipment

Description:
Suitable equipment simplifies the work and promotes correct practice in handling LOCTITE products.

LOCTITE Peristaltic Hand Pump, 97990-9700100
This hand pump is an inexpensive, accurate hand dosing pump, which screws onto the 50 ml or the 250 ml pack. LOCTITE screw locks and LOCTITE jointing products can be dosed from 0.01 to 0.4 ml with viscosities up to 30000 m Pa · s using this manual system. The system is functional in any situation, is non-drip and optimises product consumption. It also needs no cleaning and no connection for electricity or compressed air.

Teroson cartridge press, 97990-9150310
To hold standard cartridges with a content of 150/310 ml.
Stable plastic semi-shells for a regular use. With toothed rack drive.