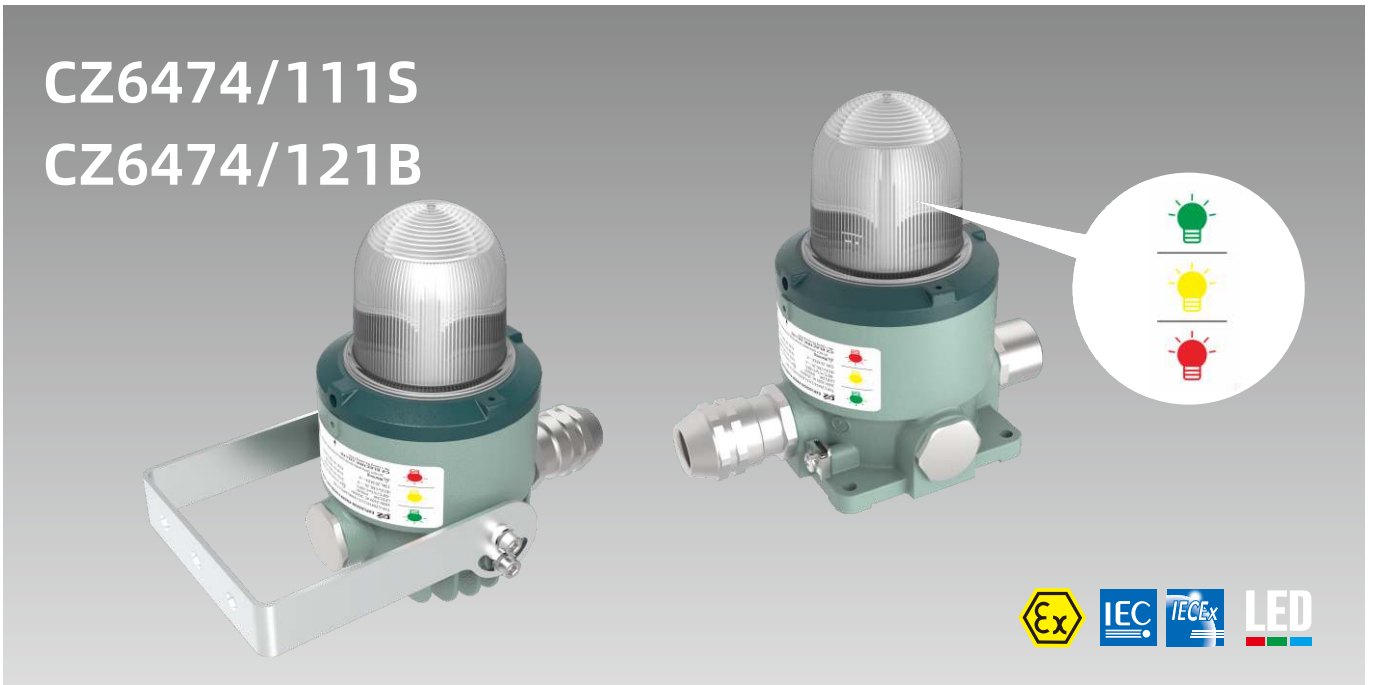

B

Descriptions

The explosion-proof light fittings shell is made of aluminum alloy die-casting, and the surface is sprayed with pure epoxy resin powder, with good corrosion resistance. The transparent cover is made of tempered glass, plus a luminous cover, and the exposed fasteners are made of stainless steel. The explosion-proof lamp is equipped with flame-proof cable gland for direct entry. The unique heat insulation design inside is combined with the external high-density heat sink, heat dissipation effect for better. The explosion-proof light fittings is IIC LED explosion-proof warning lamp, which is not only suitable for explosive environment, but also suitable for petrochemical, chemical places and marine environment with strong corrosivity.
The explosion-proof light fittings is equipped with two light -emitting types: constant on and flashing. There are built-in LED light sources of red, green and yellow colors. Other colors can also be customized according to user needs for equipment signal indication. In addition, it can realize the integrated signal indication of sound and visual by optional one or two explosion -proof buzzers.
Explosion proof light fittings can be divided into flat type and bracket type.

Zone 1 and zone 2
Zone 21 and zone 22

- It is long life and maintenance-free which the service life is up to 50000 hours and the maintenance-free of long term.
- There is a feature of good electromagnetic compatibility and it does not cause interference to the system power grid.
- There is a good performance of vibration due to the LED is the solid-state light source.
- The highest flameproof level is IIC.
- It is convenient to be mounted and maintained.
- The degree of protection is up to IP66.
- International IECEx Approval, Europe union ATEX Approval.

Main technical data

Certification	Ex mark	Meet the standard
China	Ex db IIC T6/T5 Gb Without buzzer Ex db ib IIC T6/T5 Gb With buzzer Ex tb IIIC T80°C/T95°C Db	GB/T3836
IECEx	Ex db IIC T6/T5 Gb Without buzzer Ex db ib IIC T6/T5 Gb With buzzer Ex tb IIIC T80°C/T95°C Db	IEC60079
ATEX	Ⓔx II 2G Ex db IIC T6/T5 Gb Without buzzer Ex db ib IIC T6/T5 Gb With buzzer Ⓔx II 2D Ex tb IIIC T80°C/T95°C Db	EN60079

Intended use: Can be used in zone 1 and zone 2
Can be used in zone 21 and zone 22
Degree of protection: IP66
Rated voltage: 20 ~ 40V DC / 20 ~ 28V AC 50/60Hz
20 ~ 40V DC / 24 ~ 28V AC 50/60Hz（With Buzzer）
127~ 250V DC / 100 ~ 250V AC 50/60Hz
Light source: LED
Power/Luminous flux: 5W/50lm
Power factor: ＞0.98
Ambient temperature: -60°C/-40°C≤Ta≤+40°C/55°C
（-60°C lamp electrical equipment need to be customized）
Emitting light color: red, green, yellow（Standard）, other color optional
Rated sound pressure: 80dB（at 30cm）
Stroboscopic frequency: 60 times /min
Terminal: Terminal 2.5mm², PE terminal: 2×10mm²
Cable entry: CZ6474/111S: 4-M25×1.5
CZ6474/121B: 2-M25×1.5

Order specifications

Illustration	Buzzer	Temperature class* Ta≤40°C	Temperature class* Ta≤55°C	(kg) Weight	Order No.
 CZ6474/111S Flat light	Without buzzer	T6	T5	1.63	**CZ6474/111S-LEDRGY05W-□□-□-□-□-DA5**
		T6	T5	1.73	**CZ6474/121B-LEDRGY05W-□□-□-□-□-DA1**
	With one buzzer	T6	T5	1.73	**CZ6474/111S-LEDRGY05W-□□-□-□-□1B-DA3**
		T6	T5	1.83	**CZ6474/121B-LEDRGY05W-□□-□-□-□1B-DA0**
	With two buzzers	T6	T5	1.83	**CZ6474/111S-LEDRGY05W-□□-□-□-□2B-DA1**

CZ6474/121B
Bracket light

R,G,Y– Red,Green,Yellow ← Emitting light color

07–20 ~ 40V DC/14 ~ 28V AC 50/60Hz
17–127~ 250V DC/100 ~ 250V AC 50/60Hz ← Rated voltage/frequency

4 – -40°C≤Ta≤+40°C/+55°C
6 – -60°C≤Ta≤+40°C/+55°C ← Ambient temperature

L–Constant ON
F–Flashing ← The lighting form

1B–One buzzer
2B–Two buzzers ← Buzzer（Optional）

Code of cable gland see page B/17

Code of cable gland

Code	Specification	Cable diameter
CZ6474/111S Without buzzer		
DA5	One brass CZ1725/1A M25×1.5 cable gland, three CZ1725/3A M25×1.5 stopping plugs	Φ12-19mm
DA6	Two brass CZ1725/1A M25×1.5 cable glands, two CZ1725/3A M25×1.5 stopping plugs	Φ12-19mm
CZ6474/111S With one buzzer		
DA3	One brass CZ1725/1A M25×1.5 cable gland, two CZ1725/3A M25×1.5 stopping plugs	Φ12-19mm
DA4	Two brass CZ1725/1A M25×1.5 cable glands, one CZ1725/3A M25×1.5 stopping plug	Φ12-19mm
CZ6474/111S With two buzzers, CZ6474/121B Without buzzer		
DA1	One brass CZ1725/1A M25×1.5 cable gland, one CZ1725/3A M25×1.5 stopping plug	Φ12-19mm
DA2	Two brass CZ1725/1A M25×1.5 cable glands	Φ12-19mm
CZ6474/121B With one buzzer		
DA0	One brass CZ1725/1A M25×1.5 cable gland	Φ12-19mm

B

Outline dimensions

Unit: mm

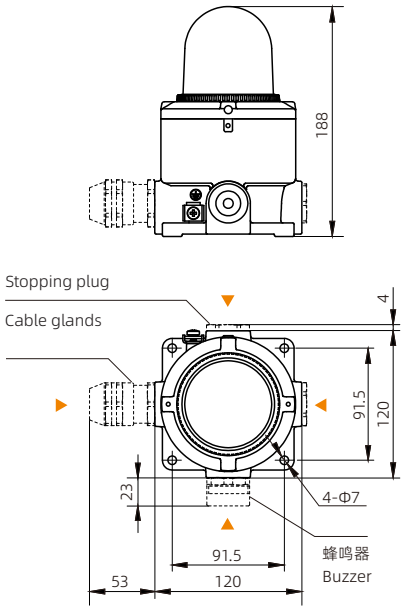

CZ6474/111S
Flat light

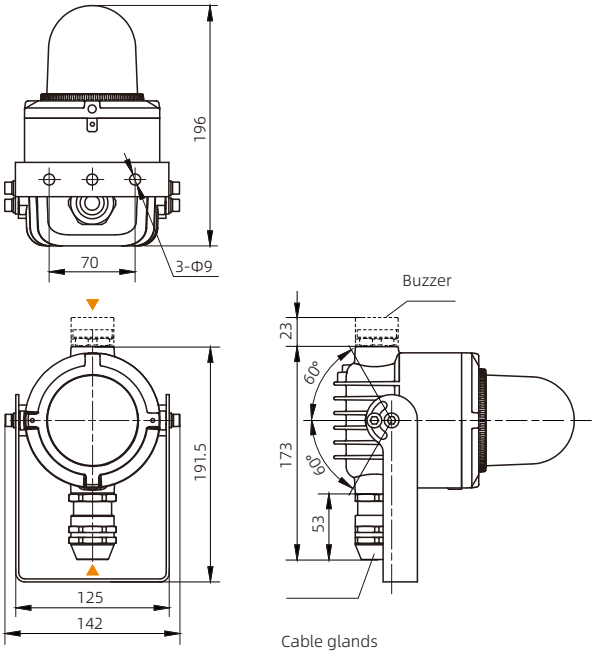

CZ6474/121B
Bracket light

▶ Cable entry