ENAPART

93 S Railroad Avenue Unit C
Bergenfield NJ 07621 USA
www.enapart.com
sales@enapart.com

Friedrich-Ebert-Anlage 36, 60325
Frankfurt am Main, Germany
www.enapart.de
anfrage@enapart.de

〒584-0023　大阪府富田林市若松町
東2丁目2番16号
www.enapart.co.jp
sales@enapart.co.jp

Via del Canneto 35,
Borgosatollo, Brescia - Italia
www.enapart.it
vendite@enapart.it

4 boulevard Carnot, 95400
villiers-le-bel, Paris, France
www.enapart.fr
sales@enapart.fr

PLAZA NUESTRA SEÑORA DE LAS
NIEVES 12 ,LOCAL ,50012,ZARAGOZA
www.enapart.es
ventas@enapart.es

Barbaros Mah. Ihlamur Bul. Ağaoğlu
My Newwork No:3/15 Ataşehir / İstanbul
www.enapart.net
satis@enapart.net

65049, ОДЕСА, ВУЛИЦЯ ІВАНА
ФРАНКА, БУДИНОК 55, ПОВЕРХ 3
www.enapart.com.ua
sales@enapart.com.ua

Складова база „Онгъл“, Склад А2, п.к.
4006, гр. Пловдив, България
www.enapart.bg
sales@enapart.bg

PRIVADA 10 B SUR #3908 COL.
ANZUREZ, C.P. 72530, PUEBLA,PUE
www.enapart.com.mx
sales@enapart.com.mx

MUNICIPIUL BUCUREŞTI, SECTOR 3,
B-DUL BASARABIA, NR.250, CORP P+5
www.enapart.ro
sales@enapart.ro

3 Austin Mews, High Street, Hemel
Hempstead, HP1 3AF , United Kingdom
www.enapart.co.uk
sales@enapart.co.uk

®

Lumolux S

System of protection	IP67
Series	∅ 70 mm
Length	524 mm - 1871 mm
Protection tube	K = PMMA
	G = Borosilicate glass
Power	2 x 8 W - 58 W
Voltage	24 V / 230 V
Luminous	770 - 4800 Lumen

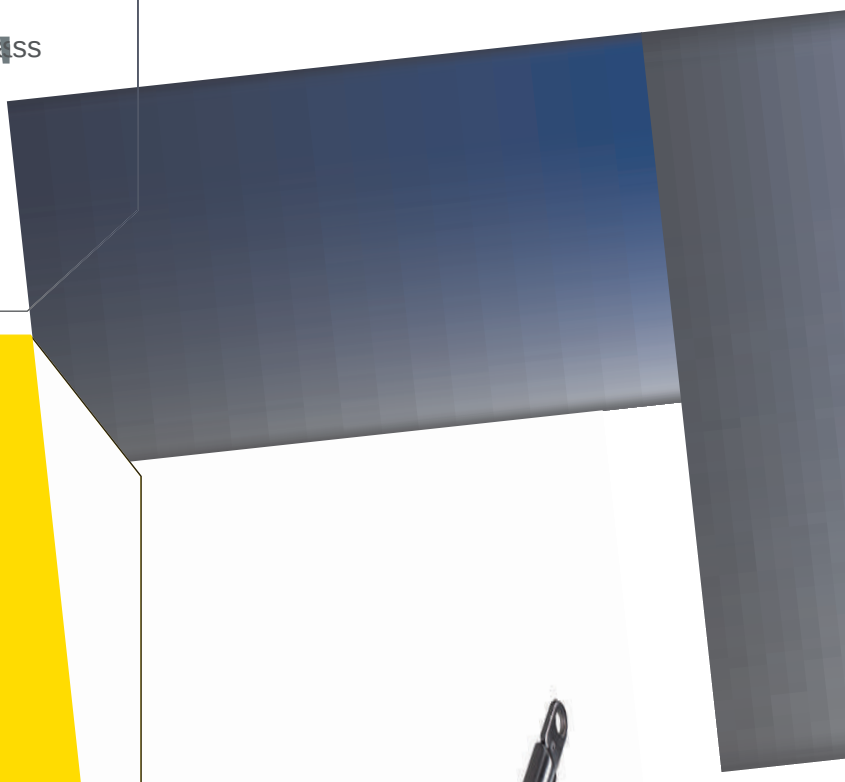

Tested and awarded.
Development and production of TECHMALUX-lps
conform to European standards.

08/2013

Notes on gas spring design and installation calculation

The Stabilus installation program allows us to design your optimized gas spring and its connection for each special application case. For this, we will need the following data for the application, e.g., a flap:

- Dimensions, location of the center of gravity and weight
- Opening angle to be accomplished
- Installation space available for the gas spring
- Point at which manual force is applied (handle)
- Temperature range
- Connection technology

This data will yield:

- Stroke A [mm]
- Extended length B [mm]
- Extension force F_1 [N]
- Manual force curve F_H [N] /α [degrees]

Hinweise zur Auslegung von Gasfedern und Einbauberechnung

Mit dem Stabilus-Einbauprogramm können wir Ihnen die optimale Gasfeder und deren Anbindung für jeden speziellen Anwendungsfall auslegen. Dazu sind folgende Angaben zur Anwendung, z.B. zu einer Klappe, notwendig:

- Abmessungen, Schwerpunktlage und Gewicht
- Zu realisierender Öffnungswinkel
- Möglicher Einbauraum für die Gasfeder
- Handangriffspunkt
- Temperaturbereich
- Anschlusstechnik

Aus diesen Angaben ergeben sich:

- Der Hub A [mm]
- Die ausgeschobene Länge B [mm]
- Die Ausschubkraft F_1 [N]
- Handkraftverlauf F_H [N] /α [Grad]

Stroke and extension force of a gas spring to open a flap

Hub und Ausschubkraft der Gasfeder zum Öffnen einer Klappe

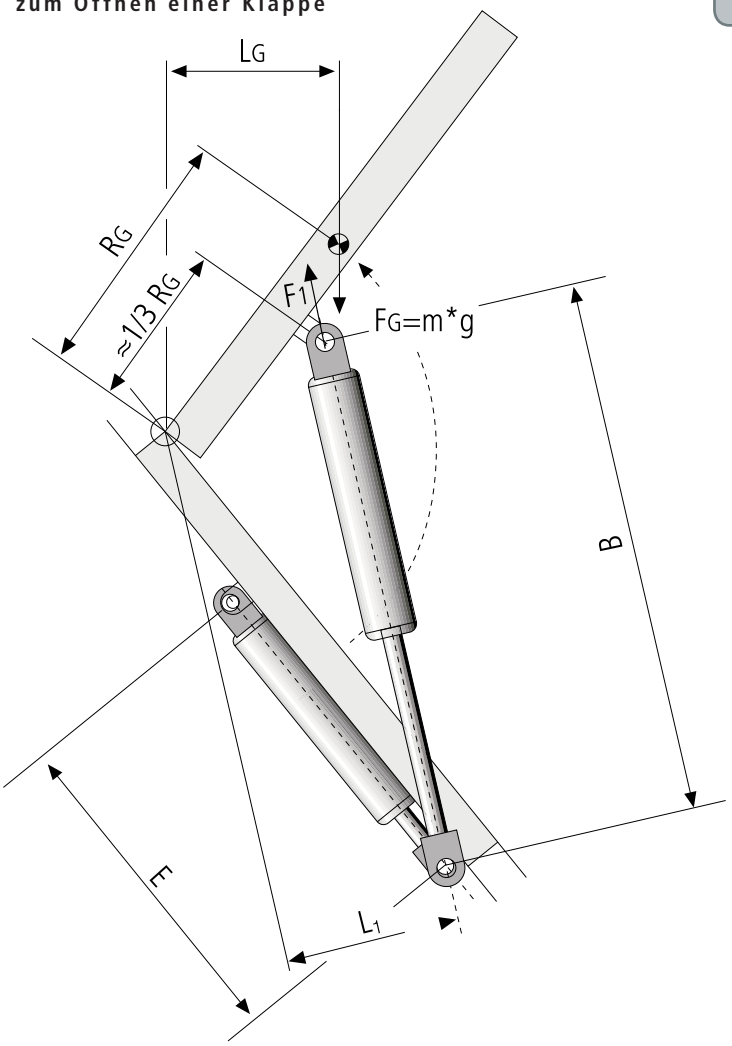

min. stroke / min. Hub $A = B - E$

Extension force / Ausschubkraft $F_1 = \frac{F_G \times L_G}{n \times L_1} \times R$

A:	Stroke of the gas spring	[mm]
B:	Extended length of the gas spring	[mm]
E:	Compressed length of the gas spring	[mm]
F_1:	Extension force of the gas spring	[N]
F_G:	Weight force of the application in the centre of gravity	[N]
g:	Acceleration due to gravity 9,81	[m/s²]
L_1:	Vertical distance bearing/deformation axis F_1	[mm]
L_G:	Vertical distance bearing/deformation axis F_G	[mm]
R_G:	Radius bearing/centre of gravity	[mm]
m:	Mass (weight) of the application	[kg]
n:	Number of gas springs	[/]
R:	Reserve force factor 1,2 ... 1,3	[/]

A:	Hub der Gasfeder	[mm]
B:	Ausgeschobene Länge der Gasfeder	[mm]
E:	Eingeschobene Länge der Gasfeder	[mm]
F_1:	Ausschubkraft der Gasfeder	[N]
F_G:	Gewichtskraft der Anwendung im Schwerpunkt	[N]
g:	Erdbeschleunigung 9,81	[m/s²]
L_1:	Senkr. Abstand Lager/Kraftwirkungslinie F_1	[mm]
L_G:	Senkr. Abstand Lager/Kraftwirkungslinie F_G	[mm]
R_G:	Radius Lager/Schwerpunkt	[mm]
m:	Masse (Gewicht) der Anwendung	[kg]
n:	Anzahl der Gasfedern	[/]
R:	Kraftreservefaktor 1,2 ... 1,3	[/]

STABILUS

- Production Powerise / Produktion Powerise
- Production gas spring / Produktion Gasfedern
- Sales Office / Verkaufsniederlassung
- Stabilus S.A.
- Official representation Offizielle Vertretung

Worldwide - Weltweit

Australia
Stabilus Pty. Ltd.
65 Redwood Drive
Dingley, VIC 3172
Australia
+61 3 9552-1400
+61 3 9552-1499
info@au.stabilus.com

Brasil
Stabilus Ltda.
Av. Pres. Tancredo
de Almeida Neves, km 1,2
CEP 37.504-066 Itajubá (MG)
Brasil
+55 35 3629-5000
+55 35 3629-5005
info@stabilus.com.br

China
Stabilus (JiangSu) Ltd.
No. 8, Long Xiang Road
Wujin High-Tech Industrial Zone
Wujin District
Changzhou City, 213164
JiangSu Province
PR China
+86 519 8622-3500
+86 519 8622-3550
info@cn.stabilus.com

China
Stabilus Sales Office Shanghai
1-2 floor of Building No. 18
No. 88 Darwin Road, Landscape Park
Zhang Jiang Hi-Tech Park
Pudong DC., Shanghai 201203
China
+86 21 3123 5961
+86 21 3123 5964
info.cn@stabilus.com

France
Stabilus France Sarl
Le Technoparc, L'Espace Média
3, rue Gustave Eiffel
78306 Poissy
France
+33 139 226494
+33 139 226496
info@fr.stabilus.com

Germany
Stabilus GmbH
Wallersheimer Weg 100
56070 Koblenz
Germany
+49 261 8900-0
+49 261 8900-204
info@stabilus.com

Italy
Stabilus GmbH Ufficio Italia
Via Francesco Glacomo Bona, 1
10064 Pinerolo (TO)
Italy
+39 0121 300-711
+39 0121 202161
info@it.stabilus.com

Japan
Stabilus Japan Corporation
3-17-5 Shin-Yokohama Kohoku-ku
222 – 0033 Yokohama, Kanagawa
Japan
+81 45 471-2970
+81 45 471-2989
info@jp.stabilus.com

Korea
Stabilus Co., Ltd.
30, Noksansaneopbuk-ro,
Gangseo-gu, Busan
South Korea / Zip Code 618-817
+82 51 979 1500
+82 51 979 1599
info@kr.stabilus.com

Korea
Stabilus Co., Ltd. Sales Office
301#, 2123
Seobu-ro, Jangan-gu,
Suwon-si, Gyeonggi-do
South Korea / Zip Code 440-827
+82 31 298-1744
+82 31 298-0742
info@kr.stabilus.com

Luxembourg
Stabilus S.A.
Luxembourg
2 rue Albert Borschette
L-1246, Luxembourg
+352 286 7701
+352 286 77099
info.lu@stabilus.com

Mexico
Stabilus, S.A. de C.V.
Industria Metalúrgica No. 1010
Parque Industrial Ramos Arizpe
C.P. 25900 Ramos Arizpe, Coahuila
Mexico
+52 844 411-0707
+52 844 411-0706
info@mx.stabilus.com

New Zealand
Stabilus Limited
75 Ellice Rd. Glenfield
PO Box 101023 NSMC
Auckland
New Zealand
+64 9 444-5388
+64 9 444-5386
info@stabilus.co.nz

Romania
Stabilus S.R.L. Romania
km 5+900
(soseaua Brasov-Harman)
RO-507190 Sanpetru,
Brasov Romania
+40 372 384 100
+40 372 384 170
info@ro.stabilus.com

Russia
Official representation in Russia
Stabilus
c/o German Chamber of Commerce
119017 Moscow
1. Kazachy per. 7
Russian Federation
+7 (495) 730 34 62
info@ru.stabilus.com

Singapore
Stabilus Singapore Sales Office
c/o ZF Southeast Asia Pte. Ltd.
11 Tuas Drive 1
Singapore 638678
+65 642 48726
+65 642 48788
info@sg.stabilus.com

Spain
Stabilus GmbH Oficina de
representación España
Edificio Arteaga
Txorierri Etorbidea
9 - 3ª planta (oficina 303)
48160 Derio (Vizcaya)
Spain
+34 94 455-4170
+34 94 455-4183
info@es.stabilus.com

United Kingdom
Stabilus Sales Office
Unit 4, Canada Close
Banbury, Oxon. OX16 2RT
United Kingdom
+44 12 95 700-100
+44 12 95 700-106
info@uk.stabilus.com

USA
Stabilus Inc.
1201 Tulip Drive
Gastonia NC 28052 - 1898
USA
+1 704 865-7444
+1 704 865-7781
info@us.stabilus.com

USA
Stabilus Detroit
Sales Office Automotive
36225 Mound Road
Sterling Heights, MI 48310-4739
USA
+1 586 977-2950
+1 586 446-3920
info@us.stabilus.com

USA
Stabilus Chicago
Sales Office Industrial
919 N. Plum Grove Road, Suite G
Schaumburg IL 60173
USA
+1 847 517-2980
+1 847 517-2987
info@us.stabilus.com